CONSORZIO BEALEROTTO MUSSI
DI MIGLIORAMENTO FONDIARIO
associato al
Consorzio di irrigazione di II° grado del Pesio

Delibera CIPE n. 25/2016 Fondo Sviluppo e Coesione
Delibera CIPE n. 53/2016 Piano Operativo Agricoltura
Sottopiano 2 "Interventi nel campo delle infrastrutture irrigue, bonifica idraulica, difesa delle esondazioni, bacini di accumulo e programmi collegati di assistenza tecnica e consulenza"
Decreto Ministeriale di concessione n. 26314 del 19/06/2019

INTERVENTI DI ADEGUAMENTO DELL'APPROVVIGIONAMENTO ED AMMODERNAMENTO DEL SISTEMA D'IRRIGAZIONE DELLE AREE IRRIGUE SOTTESE ALL'INVASO PIANFEI, VOLTI AL RISPARMIO DELLE RISORSE IDRICHE, NEI COMUNI DI PIANFEI E CHIUSA PESIO

L'UFFICIO TECNICO CONSORTILE:

CONSORZIO DEL PESIO
Consorzio di irrigazione di II° grado
12084 MONDOVI' - Via G. B. Cottolengo, 13
Tel.+39(0174)42724 - email : info@consorziodelpesio.it
pec : posta@pec.consorziodelpesio.it

CONSORZIO IRRIGUO COMPRENSORIO VALLI ELLERO, CORSAGLIA, CASOTTO
Consorzio di irrigazione di II° grado
12084 MONDOVI' - Via G. B. Cottolengo, 13
Tel.+39(0174)42724 - email : el.cor.ca@tiscali.it / pec : elcorca@pec.it

ASSOCIAZIONE IRRIGAZIONE EST SESIA
28100 NOVARA - Via Negroni, 7
Tel.+39(0321)675211 - Fax +39(0321)398458
email : estsesia.pec@legalmail.it

CONSORZIO DI BONIFICA DELLA BARAGGIA BIELLESE E VERCELLESE
13100 VERCELLI - Via Fratelli Bandiera, 16
Tel.+39(0161)283811 - Fax +39(0161)257425
email : segreteria@consorziobaraggia.it

STECI s.r.l.
SOCIETA' DI INGEGNERIA
13100 VERCELLI - C.so Liberta`, 162
Tel.+39(0161)215335 - Fax +39(0161)259070
email : info@stecisrl.it / pec : steci@pec.stecisrl.it

(Dott. Ing. Domenico CASTELLI)

SERIE:
RELAZIONI SPECIALISTICHE

DATA
GENNAIO 2020

ELABORATO:

RELAZIONE GEOTECNICA E DI CALCOLO STRUTTURALE

AGGIORNAMENTO

ELABORATO N°
RS 3.1

ATTIVITÀ SPECIALISTICHE:

PROGETTO ESECUTIVO

PRATICA 10443E

IL RESPONSABILE DEL PROCEDIMENTO
DELLA FASE PROGETTUALE:

(Dott. Ing. Massimo DEL GAUDIO)

MODIFICHE	*Aggiornamento*	1°	2°	
		07/04/2020	06/07/2020	

CONTROLLO		*OPERATORE*	*CONTROLLO*	*APPROVAZIONE*
	Firma	*MF*	*DC*	*DC*

INDICE

<u>ALLEGATO 1</u> – TABULATI DI CALCOLO:

1. Descrizione delle opere e loro rilevanza strutturale

La presente relazione riporta le verifiche e i dimensionamenti geotecnici e strutturali relativi alle opere previste in attuazione con gli *"Interventi di adeguamento dell'approvvigionamento ed ammodernamento del sistema d'irrigazione delle aree irrigue sottese all'invaso Pianfei volti al risparmio delle risorse idriche nei Comuni di Pianfei e Chiusa di Pesio"*, pertinenti all'area irrigua sottesa all'invaso Pianfei, descrivendo le tipologie strutturali, gli schemi e modelli di calcolo e i criteri di verifica da adottare per soddisfare i requisiti di sicurezza previsti dalla normativa tecnica vigente, nonché l'azione sismica di calcolo, tenendo conto delle condizioni stratigrafiche e topografiche del sito, coerentemente con i risultati delle indagini geognostiche svolte in sito.

Le costruzioni in progetto sono sostanzialmente caratterizzate dall'edificio filtri e controllo irriguo e da manufatti idraulici di derivazione e di intercettazione, sfiato e scarico, a minore rilevanza strutturale, a servizio delle condotte irrigue in progetto, prevalentemente interrati, realizzati in c.c.a. gettato in opera, contraddistinti da un'organizzazione strutturale di tipo scatolare e a platea e pareti / setti collaboranti e con vincolo di incastro e con tipologia strutturale a pareti singole o accoppiate (pozzetti) o mista a telaio-pareti (edificio filtri e controllo) ai sensi del *paragrafo 7.4.3.1* delle NTC-2018.

Nel dettaglio le costruzioni caratterizzate da maggiore rilevanza strutturale e sulle quali sono state condotte le opportune verifiche e dimensionamenti strutturali e geotecnici saranno, quindi, costituite dalle seguenti opere:

1) Edificio filtri e controllo irriguo, con struttura a telaio in c.c.a. e fondazioni di tipo diretto a platea, in c.c.a. gettato in opera e copertura in legno per uso strutturale.
2) Manufatti idraulici secondari: nodi di derivazione idraulica, pozzetti di intercettazione, di sfiato e di scarico, caratterizzati da minore rilevanza strutturale, realizzati in c.c.a. gettato in opera.

Saranno, inoltre, trattate le verifiche di stabilità geotecnica delle sezioni di scavo delle condotte principali previste in progetto.

Gli interventi, dal punto di vista strutturale, in riferimento alla categoria prevalente di opere (opere in c.c.a.), possono essere classificati quali **interventi di nuova costruzione – opere in c.c.a. con funzione idraulica e per contenimento liquidi non aggressivi,** ai sensi del *paragrafo 4.1* del D.M. 17.01.2018.

Le **fondazioni** dei vari manufatti faranno, altresì, riferimento alle opere di fondazione superficiali di tipo diretto ai sensi del *paragrafo 6.4.2* delle NTC-2018.

Per la progettazione nei confronti delle azioni sismiche si è fatto, infine, principalmente riferimento ai *paragrafi 7.4 e 7.11* (costruzioni di calcestruzzo ed opere e sistemi geotecnici) delle NTC-2018.

Dal punto di vista amministrativo le opere strutturali in progetto saranno realizzate prevalentemente in Comune di Pianfei (CN) e, in limitata parte, in Comune di Chiusa di Pesio, i quali risultano classificati in zona sismica 3 ai sensi dell'O.P.C.M. n. 3274/2003 e della D.G.R. n. 65-7656 del 21 maggio 2014 e s.m.i. (D.G.R. n. 6-887 del 30.12.2019).

Per una descrizione di dettaglio dei vari interventi progettualmente previsti si rimanda, infine, a quanto specificatamente riportato nella *Relazione tecnica generale* e negli *Elaborati grafici* di progetto.

2. Normativa di riferimento

Ai fini della presente progettazione strutturale e geotecnica si è fatto, in via principale, riferimento alle seguenti norme in materia di costruzioni, di valenza nazionale:

- Legge 5 novembre 1971, n. 1086 – Norme per la disciplina delle opere in conglomerato cementizio armato, normale e precompresso ed a struttura metallica.
- D.P.R. 6 giugno 2001, n. 380 e ss.mm.ii. – Testo unico delle disposizioni legislative e regolamentari in materia edilizia.
- Ordinanza n. 3274 del Presidente del Consiglio dei Ministri del 20.03.2003 e ss.mm.ii. – Primi elementi in materia di criteri generali per la classificazione sismica del territorio nazionale e di normative tecniche per le costruzioni in zona sismica.
- D.M. 17 gennaio 2018 – Aggiornamento delle Norme Tecniche per le Costruzioni (N.T.C.-2018).
- CIRCOLARE 21 gennaio 2019 n. 7 C.S.LL.PP. – Istruzioni per l'applicazione dell'aggiornamento delle Norme Tecniche per le Costruzioni di cui al D.M. 17 gennaio 2018.
- UNI EN 1991-1 e UNI EN 1990: Eurocodice 1 – Azioni sulle strutture.
- UNI EN 1992-1-1: Eurocodice 2 – Strutture in calcestruzzo.
- UNI EN 1993-1: Eurocodice 3 – Strutture in acciaio.
- UNI EN 1995-1: Eurocodice 5 – Strutture in legno.
- UNI EN 1996-1 / 1996-2 / 1996-3: Eurocodice 6 – Strutture in muratura.
- UNI EN 1997-1: Eurocodice 7 – Progettazione geotecnica – Regole generali.
- UNI EN 1997-2/3: Eurocodice 7 – Progettazione geotecnica – Progettazione assistita da prove di laboratorio e da prove in sito.
- UNI EN 1998-1: Eurocodice 8 – Progettazione delle strutture per la resistenza sismica

Ad integrazione dei predetti riferimenti normativi si è fatto, anche, riferimento alle seguenti Norme di scala Regionale, istruzioni applicative e comprovate linee guida:

- Deliberazione della Giunta Regionale 19 gennaio 2010, n. 11-13058 – Aggiornamento e adeguamento dell'elenco delle zone sismiche (O.P.C.M. n. 3274/2003 e O.P.C.M. 3519/2006).
- Deliberazione della Giunta Regionale 1° marzo 2010, n. 28-13422 – Differimento del termine di entrata in vigore della nuova classificazione sismica del territorio piemontese approvata con D.G.R. n. 11-13058 del 19.01.2010 e ulteriori disposizioni.

- Deliberazione della Giunta Regionale 18 febbraio 2011, n. 8-1517 – Modifica del termine di entrata in vigore della nuova classificazione sismica del territorio Piemontese come approvata con D.G.R. 19.01.2010 n. 11-13058.
- Deliberazione della Giunta Regionale 12 dicembre 2011, n. 4-3084 – D.G.R. n. 11-13058 del 19.01.2010 – Approvazione delle procedure di controllo e gestione delle attività urbanistico-edilizie ai fini della prevenzione del rischio sismico attuative della nuova classificazione sismica del territorio piemontese.
- Deliberazione della Giunta Regionale 21 maggio 2014, n. 65-7656 – Individuazione dell'ufficio tecnico regionale ai sensi del D.P.R. 6 giugno 2001, n. 380 e ulteriori modifiche e integrazioni alle procedure attuative di gestione e controllo delle attività urbanistico-edilizie ai fini della prevenzione del rischio sismico approvate con D.G.R. 12 dicembre 2011, n. 4-3084.
- Deliberazione della Giunta Regionale 30 dicembre 2019, n. 6-887 – OPCM 3519/2006. Presa d'atto e approvazione dell'aggiornamento della classificazione sismica del territorio della Regione Piemonte, di cui alla D.G.R. del 21 maggio 2014, n. 65-7656.
- Istruzioni del Consiglio Superiore dei LL.PP.
- Linee guida del Servizio Tecnico Centrale del Consiglio Superiore dei LL.PP.
- Istruzioni e i documenti tecnici del Consiglio Nazionale delle Ricerche – Gruppo Nazionale per la Difesa dai Terremoti (CNR – GNDT).
- Istruzioni e linee guida Presidenza del Consiglio dei Ministri – Dipartimento di Protezione Civile, in collaborazione con ITC (Istituto per le Tecnologie delle Costruzioni) e il Consorzio ReLUIS (Rete dei Laboratori Universitari di Ingegneria Sismica).
- Norme UNI in materia di materiali da costruzione e per uso strutturale in vigore.

Si evidenzia, in particolare, che il progetto strutturale è stato redatto in ottemperanza al D.M. 17.01.2018 e alla D.G.R. 21 maggio 2014 n. 65-7656 e ss.mm.ii. (D.G.R. N. 6-887 DEL 30.12.2019); in tal senso le strutture in progetto sono idonee a sopportare le azioni sismiche proprie del sito oggetto dei lavori classificato in zona sismica 3 ai sensi della suddetta D.G.R. e dell'O.P.C.M. n. 3274/2003 e ss.mm.ii..

3. Materiali per uso strutturale

3.1 Calcestruzzo

3.1.1 Caratteristiche tecniche e prescrizioni per la durabilità

Per quanto riguarda le caratteristiche dei calcestruzzi tutti i manufatti in c.a. e in c.a.v. potranno essere eseguiti impiegando unicamente cementi provvisti di attestato di conformità CE o equivalente che soddisfino i requisiti di accettazione previsti dalla norma UNI EN 197-1:2006. In cantiere o presso l'impianto di preconfezionamento del calcestruzzo è ammessa, pertanto, esclusivamente la fornitura di cementi rispondenti a tali prescrizioni.

Qualora vi sia l'esigenza di eseguire getti massivi, al fine di limitare l'innalzamento della temperatura all'interno del getto in conseguenza della reazione di idratazione del cemento, sarà opportuno utilizzare cementi a basso calore LH contemplati dalla norma UNI EN 197-1:2006.

Tutte le forniture di cemento dovranno, quindi, essere accompagnate da attestati di conformità CE o equivalente. E' possibile, in alternativa, una dichiarazione periodica del produttore del cemento, contenente l'elenco dei DDT relativi ai lotti consegnati al produttore di calcestruzzo e l'attestato di conformità CE o equivalente, da inoltrare da parte dell'impresa esecutrice alla Direzione Lavori. La Direzione Lavori verificherà, comunque, periodicamente quanto sopra indicato, in particolare la corrispondenza del cemento consegnato, come rilevabile dalla documentazione anzidetta, con quello previsto in Capitolato e nella documentazione o elaborati tecnici specifici e potrà richiedere, inoltre, una caratterizzazione periodica del produttore di cemento riportante i valori medi delle prove di autocontrollo sui requisiti della norma UNI EN 197-1:2006. Il prelievo del cemento dovrà avvenire al momento della consegna in conformità alla norma UNI EN 196-7.

Gli aggregati utilizzabili, ai fini del confezionamento del calcestruzzo, dovranno possedere marcatura CE o equivalente, secondo D.P.R. 246/93 e successivi decreti attuativi ed essere conformi ai requisiti della normativa UNI EN 12620 e UNI 8520-2 con i relativi riferimenti alla destinazione d'uso del calcestruzzo. La massa volumica media del granulo in condizioni s.s.a. deve essere pari o superiore a 2300 kg/m^3. A questa prescrizione si potrà derogare solo in casi di comprovata impossibilità di approvvigionamento locale, purché si continuino a rispettare le prescrizioni in termini di resistenza caratteristica a compressione e di durabilità.

Gli inerti naturali, spaccati, lavati, non gelivi e non friabili, saranno privi di sostanze organiche limose e argillose, in proporzione nocive all'indurimento del conglomerato ed alla conservazione dell'armatura. Gli aggregati dovranno, inoltre, rispettare i requisiti minimi

imposti dalla norma UNI 8520 parte 2 relativamente al contenuto di sostanze nocive, in particolare:

- il contenuto di solfati solubili in acido (espressi come SO3 da determinarsi con la procedura prevista dalla UNI-EN 1744-1 punto 12) dovrà risultare inferiore allo 0.2% sulla massa dell'aggregato indipendentemente se l'aggregato è grosso oppure fine (aggregati con classe di contenuto di solfati AS 0,2);
- il contenuto totale di zolfo (da determinarsi con UNI-EN 1744-1 punto 11) dovrà risultare inferiore allo 0,1%;
- non dovranno contenere forme di silice amorfa alcali-reattiva o in alternativa dovranno evidenziare espansioni su prismi di malta, valutate con la prova accelerata e/o con la prova a lungo termine in accordo alla metodologia prevista dalla UNI 8520-22, inferiori ai valori massimi riportati nel prospetto 6 della UNI 8520 parte 2.

In attesa di specifiche normative sugli aggregati di riciclo è consentito l'uso di aggregati grossi provenienti da riciclo, secondo i limiti di cui alla Tabella che segue, a condizione che il calcestruzzo possegga i requisiti reologici, meccanici e di durabilità previsti in progetto. Per tali aggregati, le prove di controllo di produzione in fabbrica saranno effettuate secondo i prospetti H1, H2 ed H3 dell'annesso ZA della norma UNI EN 12620; per le parti rilevanti, devono essere effettuate ogni 100 ton di aggregato prodotto e, comunque, negli impianti di riciclo, per ogni giorno di produzione.

Origine del materiale da riciclo	**Classe del calcestruzzo**	**Percentuale di impiego**
Demolizioni di edifici (macerie)	= C 8/10	fino al 100%
Demolizioni di solo calcestruzzo e c.a. (frammenti di calcestruzzo ≥90%, UNI EN 933-11:2009)	≤ C20/25	fino al 60%
	≤ C30/37	≤ 30%
	≤ C45/55	≤ 20%
Riutilizzo di calcestruzzo interno negli stabilimenti di prefabbricazione qualificati – da qualsiasi classe	Classe minore del calcestruzzo di origine	fino al 15%
	Stessa classe del calcestruzzo d'origine	fino al 10%

Tabella 1 – Percentuali di impiego di aggregati di riciclo (D.M. 17/01/2018).

Al fine di individuare i requisiti chimico-fisici aggiuntivi rispetto a quelli fissati per gli aggregati naturali, che gli aggregati riciclati devono rispettare, in funzione della destinazione

finale del calcestruzzo e delle sue proprietà prestazionali, occorrerà fare specifico riferimento alla UNI 8520 parti 1 e 2.

Per il confezionamento del calcestruzzo dovranno essere impiegati aggregati appartenenti a non meno di due classi granulometriche diverse. La percentuale di impiego di ogni singola classe granulometrica verrà stabilita dal produttore con l'obiettivo di conseguire i requisiti di lavorabilità e di resistenza alla segregazione. La curva granulometrica ottenuta dalla combinazione degli aggregati disponibili, inoltre, sarà quella capace di soddisfare le esigenze di posa in opera richieste dall'impresa (ad esempio, pompabilità), e quelle di resistenza meccanica a compressione e di durabilità richieste per il conglomerato.

La dimensione massima dell'aggregato dovrà essere non maggiore di ¼ della sezione minima dell'elemento da realizzare, dell'interferro ridotto di 5 mm, dello spessore del copriferro aumentato del 30% (in accordo anche con quanto stabilito dagli Eurocodici).

Per quanto concerne la durabilità delle opere ogni calcestruzzo dovrà soddisfare i seguenti requisiti di durabilità in accordo con quanto richiesto dalle norme **UNI 11104 e UNI-EN 206-1** e dalle **Linee Guida sul Calcestruzzo Strutturale** in base alla classe (alle classi) di esposizione ambientale della struttura cui il calcestruzzo è destinato:

- **CALCESTRUZZO DESTINATO A GETTI IN OPERA IN GENERALE:**
  - calcestruzzo a prestazione garantita (UNI EN 206-1);
  - classe di esposizione e durabilità: XC2 (UNI EN 11104);
  - rapporto (a/c) max: 0,60;
  - classe minima di resistenza caratteristica a compressione C25/30;
  - resistenza caratteristica minima in opera: 30 N/mm^2;
  - classe di consistenza al getto: S4;
  - contenuto minimo di cemento: 320 kg/m^3;
  - Dmax dell'aggregato: 25/28 mm;
  - copriferro minimo nominale: fondazioni 40/50 mm; elevazioni 30/35 mm; 90/100 mm per eventuali getti controterra.

- **CALCESTRUZZO DESTINATO ALLA REALIZZAZIONE DI MANUFATTI PREFABBRICATI IN C.C.A. / C.A.V. (SCATOLARI, TUBAZIONI IN GENERE, CANALETTE E OPERE ANALOGHE):**
  - calcestruzzo a prestazione garantita (UNI EN 206-1);
  - classe di esposizione e durabilità: XC2 (UNI EN 11104);
  - rapporto (a/c) max: 0,55;
  - classe minima di resistenza caratteristica a compressione C28/35;

- resistenza caratteristica minima in opera: 35 N/mm^2;
- classe di consistenza al getto: S4;
- contenuto minimo di cemento: 340 kg/m^3;
- Dmax dell'aggregato: 25 mm;
- copriferro minimo nominale (getti in stabilimento di produzione): 30 mm.

Il contenuto di aria in ogni miscela prodotta dovrà essere determinato in accordo alla procedura descritta alla norma UNI EN 12350-7 conforme a quanto indicato nella tabella 3.1 (in funzione del diametro massimo dell'aggregato e dell'eventuale esposizione alla classe XF: strutture soggette a cicli di gelo/disgelo in presenza o meno di sali disgelanti).

Per la produzione del calcestruzzo dovranno essere impiegate le acque potabili e quelle di riciclo conformi alla UNI EN 1008:2003.

L'essudamento di acqua di bleeding dovrà risultare non superiore allo 0,1% in conformità alla norma UNI 7122.

3.1.2 Qualifica del conglomerato cementizio

In accordo alle Norme Tecniche per le Costruzioni per la produzione del calcestruzzo si possono configurare due differenti possibilità:

1) calcestruzzo prodotto senza processo industrializzato;

2) calcestruzzo prodotto con processo industrializzato;

Il caso 1) si verifica nella produzione limitata di calcestruzzo direttamente effettuata in cantiere mediante processi di produzione temporanei e non industrializzati. In tal caso la produzione deve essere effettuata sotto la diretta vigilanza del Direttore dei Lavori. Il D.M. 17/01/2018 prevede, in questo caso, la qualificazione iniziale delle miscele per mezzo della "*Valutazione preliminare della Resistenza*" (*paragrafo 11.2.3 delle Norme Tecniche per le Costruzioni*) effettuata sotto la responsabilità dell'appaltatore o committente, prima dell'inizio della costruzione dell'opera, attraverso idonee prove preliminari atte ad accertare la resistenza caratteristica per ciascuna miscela omogenea di conglomerato che verrà utilizzata per la costruzione dell'opera. La qualificazione iniziale di tutte le miscele utilizzate deve effettuarsi per mezzo di prove certificate da parte dei laboratori di cui all'art. 59 del D.P.R. n. 380/2001 (Laboratori Ufficiali).

Nella relazione di prequalifica, nel caso di calcestruzzo prodotti senza processo industrializzato l'appaltatore dovrà fare esplicito riferimento a:

- materiali che si intendono utilizzare, indicandone provenienza, tipo e qualità;

- documenti sulla marcatura CE dei materiali costituenti;
- massa volumica reale s.s.a. e assorbimento, per ogni classe di aggregato, valutati secondo la Norma UNI 8520 parti 13a e 16a;
- studio granulometrico per ogni tipo e classe di calcestruzzo;
- tipo, classe e dosaggio del cemento;
- rapporto acqua-cemento;
- massa volumica del calcestruzzo fresco e calcolo della resa;
- classe di esposizione ambientale a cui è destinata la miscela;
- tipo e dosaggio degli eventuali additivi;
- proporzionamento analitico della miscela e resa volumetrica;
- classe di consistenza del calcestruzzo;
- risultati delle prove di resistenza a compressione;
- curve di resistenza nel tempo (almeno per il periodo 2÷28 giorni);
- caratteristiche dell'impianto di confezionamento e stato delle tarature;
- sistemi di trasporto, di posa in opera e maturazione dei getti.

Il caso 2) è trattato dal D.M. 17/01/2018 al punto 11.2.8 che definisce come calcestruzzo prodotto con processo industrializzato quello prodotto mediante impianti, strutture e tecniche organizzata organizzate sia in cantiere che in uno stabilimento esterno al cantiere stesso.

Di conseguenza in questa fattispecie rientrano, a loro volta, tre tipologie di produzione del calcestruzzo:

- calcestruzzo prodotto in impianti industrializzati fissi;
- calcestruzzo prodotto negli stabilimenti di prefabbricazione;
- calcestruzzo prodotto in impianti industrializzati installati nei cantieri (temporanei).

In questi casi gli impianti devono essere idonei ad una produzione costante, disporre di apparecchiature adeguate al confezionamento, nonché di personale esperto e di attrezzature idonee a provare, valutare e correggere la qualità del prodotto.

Al fine di contribuire a garantire quest’ultimo punto, gli impianti devono essere dotati di un sistema di controllo permanente della produzione allo scopo di assicurare che il prodotto abbia i requisiti previsti dalle Norme Tecniche per le Costruzioni e che tali requisiti siano costantemente mantenuti fino alla posa in opera.

Tale sistema di controllo non deve confondersi con l’ordinario sistema di gestione della qualità aziendale, al quale può affiancarsi.

Il sistema di controllo della produzione in fabbrica dovrà essere certificato da un organismo terzo indipendente di adeguata competenza e organizzazione, che opera in coerenza con la UNI EN 45012. A riferimento per tale certificazione devono essere prese le Linee Guida sul calcestruzzo preconfezionato edite dal Servizio Tecnico Centrale del Consiglio Superiore dei Lavori Pubblici allo scopo di ottenere un calcestruzzo di adeguate caratteristiche fisiche, chimiche e meccaniche.

Il sistema di controllo di produzione in fabbrica dovrà comprendere le prove di autocontrollo, effettuate a cura del produttore secondo quanto previsto dalle Linee Guida sul calcestruzzo preconfezionato. L'organismo di certificazione dovrà, nell'ambito dell'ispezione delle singole unità produttive dovrà verificare anche i laboratori utilizzati per le prove di autocontrollo interno. In virtù di tale verifica e sorveglianza del controllo di produzione le prove di autocontrollo della produzione sono sostitutive di quelle effettuate dai laboratori ufficiali.

Il programma delle prove di autocontrollo deve essere sviluppato in maniera tale da assicurare il rispetto dei disposti normativi per le numerose miscele prodotte, ma essere nel contempo contenuto in maniera tale da agevolarne l'applicazione, in virtù dell'elevato numero delle miscele prodotte in generale in un impianto di calcestruzzo preconfezionato.

È compito della Direzione Lavori accertarsi che i documenti che accompagnano ogni fornitura in cantiere indichino gli estremi della certificazione del sistema di controllo della produzione. Ove opportuno il Direttore dei Lavori potrà richiedere la relazione preliminare di qualifica ed i relativi allegati (es. certificazione della marcatura CE degli aggregati, del cemento, etc.).

3.1.3 Posa in opera e tolleranze esecutive

Al momento della messa in opera del conglomerato è obbligatoria la presenza di almeno un membro dell'ufficio della Direzione Lavori incaricato a norma di legge e di un responsabile tecnico dell'impresa appaltatrice.

Prima di procedere alla messa in opera del calcestruzzo, sarà necessario adottare tutti quegli accorgimenti atti ad evitare qualsiasi sottrazione di acqua dall'impasto. In particolare, in caso di casseforme in legno, andrà eseguita un'accurata bagnatura delle superfici.

È proibito eseguire il getto del conglomerato quando la temperatura esterna scende al disotto dei + 0° C se non si prendono particolari sistemi di protezione del manufatto concordati e autorizzati dalla D.L. anche qualora la temperatura ambientale superi i 33° C.

Lo scarico del calcestruzzo dal mezzo di trasporto nelle casseforme si effettua applicando tutti gli accorgimenti atti ad evitare la segregazione.

Per la compattazione del getto dovranno essere adoperati vibratori a parete o ad immersione. Nel caso si adoperi il sistema di vibrazione ad immersione, l'ago vibrante deve essere introdotto verticalmente e spostato, da punto a punto nel calcestruzzo, ogni 50 cm circa; la durata della vibrazione verrà protratta nel tempo in funzione della classe di consistenza del calcestruzzo (*tabella 2*).

Classe di consistenza	***Tempo minimo di immersione dell'ago nel cls*** *(s)*
S1	25 - 30
S2	20 - 25
S3	15 - 20
S4	10 - 15
S5	5 - 10
F6	0 - 5
SCC	Non necessita compattazione (salvo indicazioni specifiche della D.L.)

Tabella 2 – Relazione tra classe di consistenza e tempo di vibrazione del conglomerato.

Nel caso siano previste riprese di getto sarà obbligo dell'appaltatore procedere ad una preliminare rimozione, mediante scarifica con martello, dello strato corticale di calcestruzzo già parzialmente indurito. Tale superficie, che dovrà possedere elevata rugosità (asperità di circa 5 mm) verrà opportunamente bagnata per circa due ore prima del getto del nuovo strato di calcestruzzo.

Qualora alla struttura sia richiesta la tenuta idraulica, lungo la superficie scarificata verranno disposti dei giunti "water-stop" in materiale bentonitico idroespansivo o equivalenti profili bentonitici. I profili water-stop o bentonitici saranno opportunamente fissati nella scanalatura a "V" appositamente preparata e disposti in maniera tale da non interagire con le armature.

I distanziatori utilizzati per garantire i copriferri ed eventualmente le reciproche distanze tra le barre di armatura, dovranno essere in plastica o a base di malta cementizia di forma e geometria tali da minimizzare la superficie di contatto con il cassero.

Per quanto concerne le **tolleranze esecutive** nelle opere finite gli scostamenti ammissibili (tolleranze) rispetto alle dimensioni e/o quote dei progetti sono riportate di seguito; per i vari elementi strutturali; lo scostamento "S" è espresso in cm:

a) Fondazioni in genere (plinti, travi rovesce e platee):

- posizionamento rispetto alle coordinate di progetto: S = ± 2,0 cm
- dimensioni in pianta: S = ± 2,0 cm
- dimensioni in altezza (superiore) S = ± 1,0 cm
- quota altimetrica estradosso S = ± 1,0 cm

b) Strutture in elevazione in genere (muri, pareti, spalle ponti, setti e pilastri, scatolari):

- posizionamento rispetto alle coordinate e/o allineamenti di progetto: S = ± 1,0 cm
- dimensione in pianta: S = ± 1,0 cm
- spessore muri, pareti, spalle: S = ± 1,0 cm
- quota altimetrica sommità: S = ± 1,0 cm
- verticalità per H ≤600 cm S = ± 1,0 cm
- verticalità per H > 600 cm S = ± H/12

c) ***Solette, impalcati, travi e cordoli in genere, manufatti scatolari, ecc.:***

- spessore: S = ± 0,5 cm
- quota altimetrica estradosso: S = ± 1,0 cm

<u>In ogni caso gli scostamenti dimensionali negativi non devono ridurre i copriferri minimi prescritti dal progetto</u>.

3.1.4 Casseforme, disarmo e stagionatura dei getti

Per tali opere provvisorie l'impresa comunicherà preventivamente alla Direzione Lavori il sistema e le modalità esecutive che intende adottare, ferma restando l'esclusiva responsabilità dell'impresa stessa per quanto riguarda la progettazione e l'esecuzione di tali opere provvisionali e la loro rispondenza a tutte le norme di legge ed ai criteri di sicurezza che comunque possono riguardarle. Il sistema prescelto dovrà comunque essere atto a consentire la realizzazione delle opere in conformità alle disposizioni contenute nel progetto esecutivo.

Nella progettazione e nell'esecuzione delle armature di sostegno delle centinature e delle attrezzature di costruzione, l'impresa è tenuta a rispettare le norme, le prescrizioni ed i vincoli che eventualmente venissero imposti da Enti, Uffici e persone responsabili riguardo alla zona interessata.

Tutte le attrezzature dovranno essere dotate degli opportuni accorgimenti affinché, in ogni punto della struttura, la rimozione dei sostegni sia regolare ed uniforme.

Viene prescritto l'uso di casseforme metalliche o di materiali fibrocompressi o compensati (tavolati in legno); in ogni caso esse dovranno avere dimensioni e spessori sufficienti ad essere opportunamente irrigidite o controventate per assicurare l'ottima riuscita delle superfici dei getti e delle opere e la loro perfetta rispondenza ai disegni di progetto.

Nel caso di eventuale utilizzo di casseforme in legno, si dovrà curare che le stesse siano eseguite con tavole a bordi paralleli e ben accostate, in modo che non abbiano a presentarsi, dopo il disarmo, sbavature o disuguaglianze sulle facce in vista del getto. In ogni caso l'appaltatore avrà cura di trattare le casseforme, prima del getto, con idonei prodotti disarmanti conformi alla norma UNI 8866. Le parti componenti i casseri debbono essere a perfetto contatto e sigillate con idoneo materiale per evitare la fuoriuscita di boiacca cementizia.

Nel caso, infine, di casseratura a perdere, inglobata nell'opera, occorre verificare la sua funzionalità, se è elemento portante, e che non sia dannosa, se è elemento accessorio.

Prima del getto le casseforme dovranno essere pulite per l’eliminazione di qualsiasi traccia di materiale che possa compromettere l’estetica del manufatto quali polvere, terriccio etc. Dove e quando necessario si farà uso di prodotti disarmanti disposti in strati omogenei continui, su tutte le casseforme di una stessa opera dovrà essere usato lo stesso prodotto.

Nel caso di utilizzo di casseforme impermeabili, per ridurre il numero delle bolle d'aria sulla superficie del getto si dovrà fare uso di disarmante con agente tensioattivo in quantità controllata e la vibrazione dovrà essere contemporanea al getto.

L’impresa esecutrice avrà l'obbligo di predisporre in corso di esecuzione quanto è previsto nei disegni costruttivi per ciò che concerne fori, tracce, cavità, incassature, etc. per la posa in opera di apparecchi accessori quali giunti, eventuali appoggi e/o smorzatori sismici, pluviali, passi d'uomo, passerelle d'ispezione, sedi di tubi e di cavi, opere interruttive, sicurvia, parapetti, mensole, segnalazioni, parti d'impianti, ecc..

Si potrà procedere alla rimozione delle casseforme dai getti quando saranno state raggiunte le prescritte resistenze. In assenza di specifici accertamenti, l'appaltatore dovrà attenersi a quanto stabilito dalle Norme Tecniche per le Costruzioni di cui al D.M. 17/01/2018.

Le eventuali irregolarità o sbavature, qualora ritenute tollerabili, dovranno essere asportate mediante scarifica meccanica o manuale ed i punti difettosi dovranno essere ripresi accuratamente con malta cementizia a ritiro compensato immediatamente dopo il disarmo, previa bagnatura a rifiuto delle superfici interessate.

Eventuali elementi metallici, quali chiodi o reggette che dovessero sporgere dai getti, dovranno essere tagliati almeno 0,5 cm sotto la superficie finita e gli incavi risultanti verranno accuratamente sigillati con malta fine di cemento.

Il calcestruzzo, al termine della messa in opera e successiva compattazione, deve essere stagionato e protetto dalla rapida evaporazione dell'acqua di impasto e dall'essiccamento degli strati superficiali (fenomeno particolarmente insidioso in caso di elevate temperature ambientali e forte ventilazione). Per consentire una corretta stagionatura è necessario mantenere costantemente umida la struttura realizzata; l'appaltatore è responsabile della corretta esecuzione della stagionatura che potrà essere condotta mediante:

- la permanenza entro casseri del conglomerato;
- l'applicazione, sulle superfici libere, di specifici film di protezione mediante la distribuzione nebulizzata di additivi stagionanti (agenti di curing);
- l'irrorazione continua del getto con acqua nebulizzata;
- la copertura delle superfici del getto con fogli di polietilene, sacchi di iuta o tessuto non tessuto mantenuto umido in modo che si eviti la perdita dell'acqua di idratazione;
- la creazione attorno al getto, con fogli di polietilene od altro, di un ambiente mantenuto saturo di umidità;
- la creazione, nel caso di solette e getti a sviluppo orizzontale, di un cordolo perimetrale (in sabbia od altro materiale rimovibile) che permetta di mantenere la superficie ricoperta da un costante velo d'acqua.

I prodotti filmogeni di protezione non possono essere applicati lungo i giunti di costruzione, sulle riprese di getto o sulle superfici che devono essere trattate con altri materiali.

Al fine di assicurare alla struttura un corretto sistema di stagionatura in funzione delle condizioni ambientali, della geometria dell'elemento e dei tempi di scasseratura previsti, l'appaltatore, previa informazione alla direzione dei lavori, eseguirà verifiche di cantiere che assicurino l'efficacia delle misure di protezione adottate.

Sarà obbligatorio procedere alla maturazione dei getti per almeno 7 giorni consecutivi. **Qualora dovessero insorgere esigenze particolari per sospendere la maturazione esse dovranno essere espressamente autorizzate dalla direzione dei lavori.**

Nel caso di superfici orizzontali non casserate (pavimentazioni, platee di fondazione…) dovrà essere effettuata l'operazione di bagnatura continua con acqua non appena il conglomerato avrà avviato la fase di presa. Le superfici verranno mantenute costantemente umide per almeno 7 giorni. Per i getti confinati entro casseforme l'operazione di bagnatura verrà avviata al momento della rimozione dei casseri, se questa avverrà prima di 7 giorni. Per

eventuali calcestruzzi con classe di resistenza a compressione maggiore o uguale di C40/50 la maturazione deve essere curata in modo particolare.

3.1.5 Controlli in corso d'opera

La Direzione Lavori eseguirà controlli in corso d'opera per verificare la conformità tra le caratteristiche del conglomerato messo in opera e quello stabilito dal progetto e garantito in sede di valutazione preliminare.

Il controllo di accettazione va eseguito su miscele omogenee di conglomerato e, in funzione del quantitativo di conglomerato accettato, può essere condotto mediante (Norme Tecniche cap. 11):

- **controllo di tipo "A";**
- **controllo di tipo "B"** (obbligatorio nelle costruzioni con più di 1500 m^3 di miscela omogenea).

Il prelievo del conglomerato per i controlli di accettazione si deve eseguire a "bocca di betoniera", conducendo tutte le operazioni in conformità con le prescrizioni indicate nelle Norme Tecniche per le costruzioni e nella norma UNI-EN 206-1 (non prima di aver scaricato almeno 0.3 m^3 di conglomerato).

Il prelievo di calcestruzzo dovrà essere eseguito alla presenza della D.L. o di un suo incaricato.

In particolare i campioni di calcestruzzo devono essere preparati con casseforme rispondenti alla norma UNI EN 12390-1, confezionati secondo le indicazioni riportate nella norma UNI EN 12390-2 e provati presso un laboratorio Ufficiale secondo la UNI EN 12390-3. Le casseforme devono essere realizzate con materiali rigidi al fine di prevenire deformazioni durante le operazioni di preparazione dei provini, devono essere a tenuta stagna e non assorbenti. La geometria delle casseforme deve essere cubica di lato pari a 150 mm o cilindrica con diametro d pari a 150 mm ed altezza h 300 mm.

Il prelievo del calcestruzzo deve essere effettuato non prima di aver scaricato 0,3 m^3 di calcestruzzo e preferibilmente a metà dello scarico della betoniera. Il conglomerato sarà versato tramite canaletta all'interno di una carriola in quantità pari a circa 2 volte superiore a quello necessario al confezionamento dei provini. Il materiale versato verrà omogeneizzato con l'impiego di una sassola.

È obbligatorio inumidire tutti gli attrezzi necessari al campionamento (carriola, sessola) prima di utilizzarli, in modo tale da non modificare il contenuto di acqua del campione di materiale prelevato.

Prima del riempimento con il conglomerato, le casseforme andranno pulite e trattate con un liquido disarmante.

Per la compattazione del calcestruzzo entro le casseforme è previsto l'uso di uno dei seguenti mezzi:

- pestello di compattazione metallico a sezione circolare e con le estremità arrotondate, con diametro di circa 16 mm e lunghezza di circa 600 mm;
- barra diritta metallica a sezione quadrata, con lato di circa 25 mm e lunghezza di circa 380 mm;
- vibratore interno con frequenza minima di 120 Hz e diametro non superiore ad ¼ della più piccola dimensione del provino;
- tavola vibrante con frequenza minima pari a 40 Hz.

Il riempimento della cassaforma deve avvenire per strati successivi di 75 mm, ciascuno dei quali accuratamente compattati senza produrre segregazioni o comparsa di acqua sulla superficie.

Nel caso di compattazione manuale, ciascuno strato verrà assestato fino alla massima costipazione, avendo cura di martellare anche le superficie esterne del cassero.

Nel caso si impieghi il vibratore interno, l'ago non dovrà toccare lungo le pareti verticali e sul fondo della casseratura.

La superficie orizzontale del provino verrà spianata con un movimento a sega, procedendo dal centro verso i bordi esterni.

Su tale superficie verrà applicata (annegandola nel calcestruzzo) un'etichetta di plastica/cartoncino rigido sulla quale verrà riportata l'identificazione del campione con inchiostro indelebile; l'etichetta sarà siglata dalla direzione dei lavori al momento del confezionamento dei provini.

L'esecuzione del prelievo deve essere accompagnata dalla stesura di un verbale di prelievo che riporti le seguenti indicazioni:

- identificazione del campione:
- tipo di calcestruzzo;
- numero di provini effettuati;
- codice del prelievo;
- metodo di compattazione adottato;
- numero del documento di trasporto;
- ubicazione del getto per il puntuale riferimento del calcestruzzo messo in opera;
- identificazione del cantiere e dell'impresa appaltatrice;

- data e ora di confezionamento dei provini;
- la firma della D.L. in caso di opere particolari, soggette a sorveglianza da parte di Enti ministeriali; il verbale di prelievo dovrà riportare anche la firma dell'Ingegnere incaricato della sorveglianza in cantiere.

Al termine del prelievo, i provini verranno posizionati al di sopra di una superficie orizzontale piana in una posizione non soggetta ad urti e vibrazioni.

Il calcestruzzo campionato deve essere lasciato all'interno delle casseforme per almeno 16 h (in ogni caso non oltre i 3 giorni). In questo caso sarà opportuno coprire i provini con sistemi isolanti o materiali umidi (es. sacchi di juta, tessuto non tessuto…). Trascorso questo tempo i provini dovranno essere consegnati presso il Laboratorio incaricato di effettuare le prove di schiacciamento dove, una volta rimossi dalle casseforme, devono essere conservati in acqua alla temperatura costante di 20± 2 °C oppure in ambiente termostato posto alla temperatura di 20± 2 °C ed umidità relativa superiore al 95%.

Nel caso in cui i provini vengano conservati immersi nell'acqua, il contenitore deve avere dei ripiani realizzati con griglie (è consentito l'impiego di reti elettrosaldate) per fare in modo che tutte le superfici siano a contatto con l'acqua.

L'impresa appaltatrice sarà responsabile delle operazioni di corretta conservazione dei provini campionati e della loro custodia in cantiere prima dell'invio al Laboratorio incaricato di effettuare le prove di schiacciamento. Inoltre, l'impresa appaltatrice sarà responsabile del trasporto e della consegna dei provini di calcestruzzo al Laboratorio Ufficiale unitamente ad una lettera ufficiale di richiesta prove firmata dalla Direzione Lavori.

Qualora per esigenze legate alla logistica di cantiere o ad una rapida messa in servizio di una struttura o di porzioni di essa si rende necessario prescrivere un valore della resistenza caratteristica a tempi inferiori ai canonici 28 giorni o a temperature diverse dai 20 °C i controlli di accettazione verranno effettuati con le stesse modalità sopra descritte fatta eccezione per le modalità di conservazione dei provini che verranno mantenuti in adiacenza alla struttura o all'elemento strutturale per il quale è stato richiesto un valore della resistenza caratteristica a tempi e temperature inferiori a quelle canoniche. Resta inteso che in queste situazioni rimane sempre l'obbligo di confezionare e stagionare anche i provini per 28 giorni a 20 °C e U.R. del 95% per valutare la rispondenza del valore caratteristico a quello prescritto in progetto.

I certificati emessi dal Laboratorio dovranno contenere tutte le informazioni richieste al punto 11.2.5.3 delle Norme Tecniche per le Costruzioni del 17/01/2018.

3.1.6 Elementi e manufatti prefabbricati

Per quanto concerne la fornitura di elementi prefabbricati (quali ad esempio travetti e/o lastre predalles, manufatti scatolari, tubi, pozzetti, ecc.) è fatto obbligo all'appaltatore di esibire, prima dell'accettazione della fornitura, adeguata relazione di calcolo e verifica strutturale ai sensi delle NTC-2018 e s.m.i. secondo i parametri e le azioni di progetto previsti nella presente relazione, comprensiva delle modalità di posa in opera dei prefabbricati. Dovranno, inoltre, essere forniti gli elaborati costruttivi dei ferri d'armatura per consentire di valutare il comportamento d'insieme del manufatto.

In ultimo dovranno essere resi disponibili il certificato relativo alla produzione in serie di manufatti prefabbricati oltre ai certificati di prova sui materiali e al certificato CE secondo normativa Comunitaria vigente.

Gli elaborati esecutivi dei manufatti prefabbricati (relazione di calcolo, disegni tecnici) dovranno essere firmati da progettista abilitato per conto del produttore e preventivamente approvati dalla D.L. al fine del nulla osta alla loro fornitura e utilizzo nonché del loro deposito strutturale ai sensi della Legge 1086/71 e del D.P.R. 380/2001.

3.2 Acciaio

L'acciaio da cemento armato ordinario comprende:

- **barre d'acciaio tipo B450C** (6 mm ≤ Ø ≤ 50 mm), rotoli (6 mm ≤ Ø ≤ 16 mm);
- prodotti raddrizzati ottenuti da rotoli ammessi senza limitazioni con diametri ≤ 16mm;
- **reti elettrosaldate tipo B450C**;
- tralicci elettrosaldati.

Le **strutture in carpenteria metallica** per parapetti, grigliati, profilati, tubolari, lamiere, ecc. saranno realizzate in acciaio da carpenteria avente **classe S275JR**; profilati, tubolari e lamiere dovranno essere prodotti secondo la norma UNI EN 10025, UNI EN 10210, UNI EN 10219 o norme equivalenti (per le caratteristiche meccaniche fare riferimento agli Elaborati grafici di progetto) con riferimento a quanto previsto dalle NTC-2018, secondo i parametri di progetto. I manufatti e gli elementi in carpenteria metallica dovranno essere preventivamente sottoposti ad apposita **zincatura a caldo** secondo norma UNI EN ISO 1461 o alla norma EN 10326 o equivalenti. **Bulloneria, giunzioni e saldature** dovranno essere eseguite secondo norma UNI 5737, UNI 6592, UNI EN 14399, UNI EN 15048, UNI EN ISO

898, UNI EN ISO 4016 e UNI EN ISO 3834. Le bullonature dovranno essere di classe di resistenza minima 8.8 e dotate di marcatura CE.

Ognuno dei prodotti suddetti dovrà rispondere alle caratteristiche richieste dalle Norme Tecniche per le Costruzioni, D.M. 17.01.2018, che specifica le caratteristiche tecniche che devono essere verificate, i metodi di prova, le condizioni di prova e il sistema per l'attestazione di conformità per gli acciai destinati alle costruzioni in cemento armato che ricadono sotto la Direttiva Prodotti CPD (89/106/EC).

L'acciaio dovrà essere qualificato all'origine, deve portare impresso, ove prescritto dalle suddette norme, il marchio indelebile che lo renda costantemente riconoscibile e riconducibile inequivocabilmente allo stabilimento di produzione.

3.2.1 Proprietà meccaniche

Le proprietà meccaniche devono essere in accordo con quanto specificato in EN 10080 e nelle Norme Tecniche per le Costruzioni del 17.01.2018:

Proprietà	**Valore caratteristico**
f_y (N/mm^2)	$\geq 450\ \alpha$
f_t (N/mm^2)	$\geq 540\ \alpha$
f_t/f_y	$\geq 1{,}15\ \beta$ $\leq 1{,}35\ \beta$
Agt (%)	$\geq 7{,}5\ \beta$
$f_y/f_{y,nom}$	$\leq 1{,}25\ \beta$
α *valore caratteristico con p = 0,95* β *valore caratteristico con p = 0,90*	

Tabella 3 – Proprietà meccaniche secondo il D.M. 17/01/2018.

In aggiunta a quanto sopra riportato si possono richiedere le seguenti caratteristiche aggiuntive Tipo SISMIC:

Proprietà	**Valore caratteristico**
Resistenza a fatica assiale	2 milioni di cicli
Resistenza a fatica oligociclica	3 cicli/sec con deformazione 1,5÷4%
Idoneità al raddrizzamento dopo piega	Integrità
Controllo radiometrico	superato, ai sensi del D.Lgs. 230/1995 e del D.Lgs. 241/2000

Tabella 4 – Proprietà aggiuntive.

3.2.2 Controlli sull'acciaio

In cantiere è ammessa esclusivamente la fornitura e l'impiego di acciai saldabili e ad aderenza migliorata, qualificati secondo le procedure indicate nel D.M. 17.01.2018 al punto 11.3.1.6 e controllati con le modalità riportate nei punti 11.3.2.11 e 11.3.2.12 del citato decreto.

Tutte le forniture di acciaio devono essere accompagnate da copia dell'attestato di qualificazione rilasciato dal Consiglio Superiore dei LL.PP. - Servizio Tecnico Centrale.

Le forniture effettuate da un commerciante o da un trasformatore intermedio dovranno essere accompagnate da copia dei documenti rilasciati dal produttore e completati con il riferimento al documento di trasporto del commerciante o trasformatore intermedio. In quest'ultimo caso per gli elementi presaldati, presagomati o preassemblati in aggiunta agli attestati di qualificazione dovranno essere consegnati i certificati delle prove fatte eseguire dal Direttore del Centro di Trasformazione. Tutti i prodotti forniti in cantiere dopo l'intervento di un trasformatore intermedio devono essere dotati di una specifica marcatura che identifichi in modo inequivocabile il centro di trasformazione stesso, in aggiunta alla marcatura del prodotto di origine.

La Direzione Lavori prima della messa in opera potrà verificare quanto sopra indicato; in particolare dovrà provvedere a verificare la rispondenza tra la marcatura riportata sull'acciaio con quella riportata sui certificati consegnati. La mancata marcatura, la non corrispondenza a quanto depositato o la sua illeggibilità, anche parziale, rendono il prodotto non impiegabile e, pertanto, le forniture dovranno essere rifiutate.

Il Direttore dei Lavori eseguirà i controlli di accettazione sull'acciaio consegnato in cantiere, in conformità con le indicazioni contenute nel D.M. 17.01.2018 al punto 11.3.2.12.

Il campionamento ed il controllo di accettazione dovranno essere effettuati entro 30 giorni dalla data di consegna del materiale.

All'interno di ciascuna fornitura consegnata e per ogni diametro delle barre in essa contenuta, si dovrà procedere al campionamento di tre spezzoni di acciaio di lunghezza complessiva pari a 100 cm ciascuno, sempre che il marchio e la documentazione di accompagnamento dimostrino la provenienza del materiale da uno stesso stabilimento. In caso contrario i controlli devono essere estesi agli altri diametri della partita.

Non saranno accettati quei fasci di acciaio contenenti barre di differente marcatura.

Il prelievo dei campioni in cantiere e la consegna al Laboratorio Ufficiale incaricato dei controlli verrà effettuato dal Direttore dei Lavori o di un tecnico da lui delegato; la consegna

delle barre di acciaio campionate, identificate mediante sigle o etichettature indelebili, dovrà essere accompagnata da una richiesta di prove sottoscritta dal Direttore dei Lavori.

La domanda di prove al Laboratorio Ufficiale dovrà essere sottoscritta dal Direttore dei Lavori e dovrà inoltre contenere precise indicazioni sulla tipologia di opera da realizzare.

Il controllo del materiale, eseguito in conformità alle prescrizioni del punto 11.3.2.12 di cui al precedente Decreto, riguarderà le proprietà meccaniche di resistenza e di allungamento.

Caratteristica	**Valore Limite**	**Note**
f_y minimo	425 N/mm^2	*per acciai B450A e B450C*
f_y massimo	572 N/mm^2	*per acciai B450A e B450C*
Agt minimo	≥ 6.0%	*Per acciai laminati a caldo*
Rottura/snervamento	$1.13 < f_t/f_y < 1.37$	*Per acciai laminati a caldo*
Piegamento/raddrizzamento	assenza di cricche	*per acciai B450A e B450C*

Tabella 5 – Valori limite per prove acciaio.

Qualora la determinazione del valore di una quantità fissata in termini di valore caratteristico crei una controversia, il valore dovrà essere verificato prelevando e provando tre provini da prodotti diversi nel lotto consegnato.

Se un risultato è minore del valore caratteristico prescritto, sia il provino che il metodo di prova devono essere esaminati attentamente. Se nel provino è presente un difetto o si ha ragione di credere che si sia verificato un errore durante la prova, il risultato della prova stessa deve essere ignorato. In questo caso occorrerà prelevare un ulteriore (singolo) provino.

Se i tre risultati validi della prova sono maggiori o uguali del prescritto valore caratteristico, il lotto consegnato deve essere considerato conforme.

Se i criteri sopra riportati non sono soddisfatti, dieci ulteriori provini devono essere prelevati da prodotti diversi del lotto in presenza del produttore o suo rappresentante che potrà anche assistere all'esecuzione delle prove presso un laboratorio di cui all'art. 59 del D.P.R. n. 380/2001.

Il lotto deve essere considerato conforme se la media dei risultati sui 10 ulteriori provini è maggiore del valore caratteristico e i singoli valori sono compresi tra il valore minimo e il valore massimo secondo quanto sopra riportato. In caso contrario il lotto deve essere respinto. Se all'interno della fornitura sono contenute anche reti elettrosaldate, il controllo di accettazione dovrà essere esteso anche a questi elementi. In particolare, a partire da tre differenti reti elettrosaldate verranno prelevati 3 campioni di dimensioni 100 x 100 cm.

Il controllo di accettazione riguarderà la prova di trazione su uno spezzone di filo comprendente almeno un nodo saldato, per la determinazione della tensione di rottura, della

tensione di snervamento e dell'allungamento; inoltre, dovrà essere effettuata la prova di resistenza al distacco offerta dalla saldatura del nodo.

I controlli in cantiere sono facoltativi quando il prodotto utilizzato proviene da un Centro di trasformazione o luogo di lavorazione delle barre, nel quale sono stati effettuati tutti i controlli descritti in precedenza. In quest'ultimo caso, la spedizione del materiale deve essere accompagnata dalla certificazione attestante l'esecuzione delle prove di cui sopra.

Alla consegna in cantiere, l'Impresa appaltatrice avrà cura di depositare l'acciaio in luoghi protetti dagli agenti atmosferici.

Resta nella discrezionalità del Direttore dei Lavori effettuare tutti gli eventuali ulteriori controlli ritenuti opportuni (es. indice di aderenza, saldabilità).

3.3 Legno per uso strutturale

3.3.1 Caratteristiche tecniche e prestazionali

Gli elementi in legno per uso strutturale adibiti alla realizzazione dell'orditura principale della copertura dell'edificio tecnico in progetto dovranno risultare conformi alla norma europea armonizzata UNI EN 14081. In particolare, il legno massiccio dovrà essere prodotto in conformità alle norme UNI EN 338, UNI EN 1912, per legno di provenienza estera, ed UNI 11035 parti 1 e 2 per legno di provenienza italiana. L'eventuale fornitura di legno lamellare dovrà, invece, essere conforme alle norme UNI EN 14080, UNI EN 386, UNI EN 1194 (lamelle), UNI EN 13986 (pannelli a base di legno), UNI EN 301 (adesivi per elementi incollati in stabilimento) e UNI EN 384 (prove sperimentali).

Le caratteristiche tecniche prestazionali del legno previsto sono le seguenti:

- specie arborea: abete rosso (abete del nord);
- tipologia di lavorazione: legno massiccio Uso Fiume / Uso Trieste;
- classe minima di resistenza: C24.
- categoria: S1.

Secondo quanto specificato al punto A del § 11.1 delle N.T.C.-2018, gli elementi strutturali in legno devono recare la Marcatura CE. Qualora non sia applicabile la marcatura CE, i produttori di elementi di legno massiccio per uso strutturale, secondo quanto specificato al punto B del § 11.1 delle N.T.C.-2018, devono essere qualificati al Servizio Tecnico Centrale del Consiglio Superiore dei Lavori Pubblici (S.T.C.), secondo la documentazione seguente:

- l'individuazione dello stabilimento cui l'istanza si riferisce;

- il tipo di elementi strutturali che l'azienda è in grado di produrre;
- l'organizzazione del sistema di rintracciabilità relativo alla produzione di legno strutturale;
- l'organizzazione del controllo interno di produzione, con l'individuazione di un "Direttore Tecnico della produzione" qualificato alla classificazione del legno strutturale ed all'incollaggio degli elementi ove pertinente;
- il marchio afferente al produttore specifico per la classe di prodotti "elementi di legno per uso strutturale".

I produttori di sistemi strutturali con struttura in legno, per i quali siano già disponibili Linee Guida ETA, dovranno adeguarsi a quanto prescritto al punto C del § 11.1 delle N.T.C.-2018. I produttori sono, inoltre, tenuti ad inviare al S. T. C. i seguenti documenti:

a) una dichiarazione attestante la permanenza delle condizioni iniziali di idoneità della organizzazione del controllo interno di qualità o le eventuali modifiche;

b) i risultati dei controlli interni eseguiti nell'ultimo anno, per ciascun tipo di prodotto, da cui risulti anche il quantitativo di produzione.

Il mancato rispetto delle condizioni sopra indicate, accertato anche attraverso sopralluoghi, può comportare la decadenza della qualificazione.

Tutte le forniture di elementi in legno per uso strutturale devono riportare il marchio del produttore e essere accompagnate da una documentazione relativa alle caratteristiche tecniche del prodotto. Il Direttore Tecnico della produzione, di comprovata esperienza e dotato di abilitazione professionale tramite apposito corso di formazione, assumerà le responsabilità relative alla rispondenza tra quanto prodotto e la documentazione depositata.

La produzione, fornitura e utilizzazione dei prodotti di legno e dei prodotti a base di legno per uso strutturale dovranno avvenire in applicazione di un sistema di assicurazione della qualità e di un sistema di rintracciabilità che copra la catena di distribuzione dal momento della prima classificazione e marcatura dei singoli componenti e/o semilavorati almeno fino al momento della prima messa in opera.

Il Direttore dei Lavori potrà rifiutare le eventuali forniture non conformi a quanto sopra prescritto.

3.3.2 Verifiche in accettazione

Le caratteristiche dei materiali, indicate nel progetto secondo le prescrizioni di cui ai precedenti paragrafi o secondo eventuali altre prescrizioni in funzione della specifica opera,

devono essere garantite dai fornitori e/o produttori, per ciascuna fornitura di cantiere ai sensi del *paragrafo 11.7.10.2 delle N.T.C.-2018*.

Tutte le forniture di legno strutturale devono essere accompagnate da una copia dell'attestato di qualificazione del Servizio Tecnico Centrale del Consiglio Superiore dei Lavori Pubblici o marcature CE equivalente. L'attestato può essere utilizzato senza limitazione di tempo, finché permane la validità della qualificazione e vengono rispettate le prescrizioni periodiche di cui al *§ 11.7.10.1 delle N.T.C.-2018*. Sulla copia dell'attestato deve essere riportato il riferimento al documento di trasporto. Le forniture effettuate da un commerciante o da un trasformatore intermedio devono essere accompagnate da copia dei documenti rilasciati dal Produttore e completati con il riferimento al documento di trasporto del commerciante o trasformatore intermedio. Il Direttore dei Lavori prima della messa in opera, verificherà quanto sopra indicato e potrà rifiutare le eventuali forniture non conformi.

Nel caso in cui tali prodotti, non soggetti o non recanti la marcatura CE, siano comunque provvisti di una certificazione di idoneità tecnica riconosciuta dalle rispettive Autorità estere competenti, il produttore potrà, in alternativa a quanto previsto al *§ 11.7.10.1* delle N.T.C., inoltrare al Servizio Tecnico Centrale del Consiglio Superiore dei Lavori Pubblici domanda intesa ad ottenere il riconoscimento dell'equivalenza della procedura adottata nel Paese di origine depositando contestualmente la relativa documentazione per i prodotti da fornire con il corrispondente marchio. Tale equivalenza è sancita con decreto del Presidente del Consiglio Superiore dei Lavori Pubblici.

Ciascun prodotto qualificato deve, pertanto, costantemente essere riconoscibile per quanto concerne le caratteristiche qualitative e riconducibile allo stabilimento di produzione tramite marchiatura indelebile depositata presso il Servizio Tecnico Centrale, conforme alla relativa norma armonizzata.

Ogni prodotto deve, inoltre, essere marchiato con identificativi diversi da quelli di prodotti aventi differenti caratteristiche, ma fabbricati nello stesso stabilimento e con identificativi differenti da quelli di prodotti con uguali caratteristiche ma fabbricati in altri stabilimenti, siano essi o meno dello stesso produttore. La marchiatura deve essere inalterabile nel tempo e senza possibilità di manomissione.

Comunque, per quanto possibile, anche in relazione alla destinazione d'uso del prodotto, il produttore è tenuto a marchiare ogni singolo pezzo. Ove ciò non sia possibile, per la specifica tipologia del prodotto, la marchiatura deve essere tale che prima dell'apertura dell'eventuale ultima e più piccola confezione il prodotto sia riconducibile al produttore, al tipo di legname nonché al lotto e alla data di classificazione.

4. Modellazione geotecnica del sito oggetto dei lavori

Il presente capitolo riporta la modellazione geotecnica e la stima dei parametri geomeccanici che caratterizzano il terreno sia a matrice granulare che rocciosa, interessato dai presenti lavori in conformità a quanto previsto dal *paragrafo 6.2.2. delle N.T.C.-2018*.

Le caratteristiche geotecniche del terreno sono state, in particolare, desunte con riferimento alla seguente documentazione:

1) indagini geognostiche del 2012 a corredo della progettazione degli *Interventi di riqualificazione dell'invaso di Pianfei*, eseguite dalla società Polo Geologico S.r.l.;
2) indagini svolte in sito nel mese di giugno 2017, contestualmente alla progettazione definitiva generale, allegate al presente progetto;
3) *Relazione Geologica* di progetto in data giugno 2019, specifica per l'area irrigua in esame, sottesa all'invaso di Pianfei;
4) elaborati geologici, geolitologici e idrogeologici allegati al P.R.G.C. di Pianfei.
5) Banca dati geotecnica ARPA Piemonte;
6) considerazioni pratica circa lo stato dei luoghi e a interventi analoghi eseguiti nella zona in argomento.

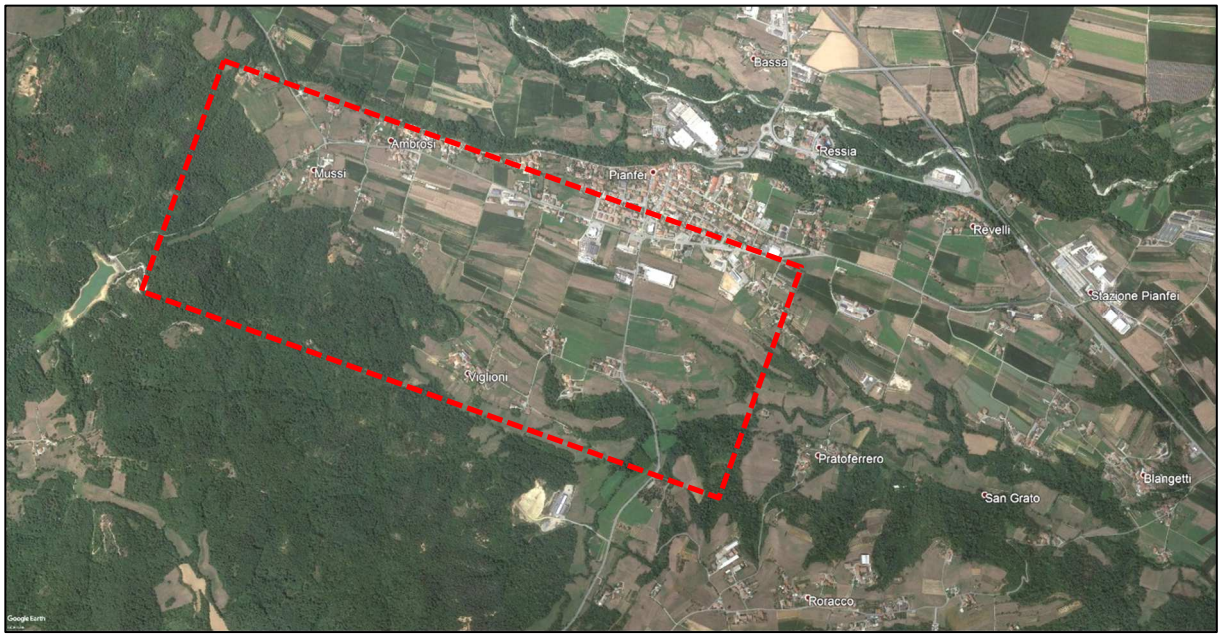

Figura 1 – Area irrigua sottesa all'invaso di Pianfei su foto satellitare.

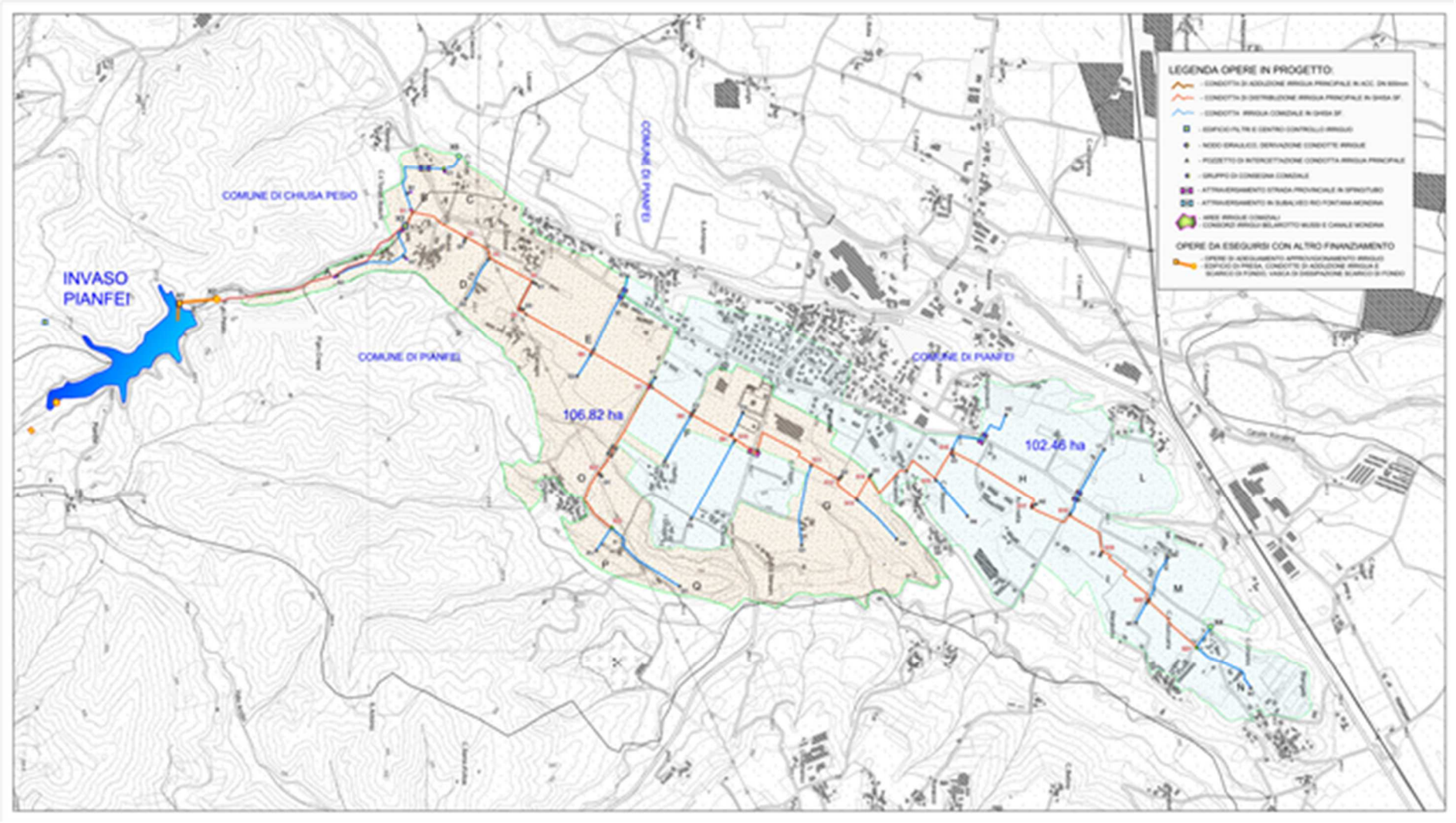

Figura 2 – rete irrigua in progetto su base CTR.

In riferimento alle indagini effettuate in sito, emerge che i terreni indagati possono sinteticamente configurarsi come un multistrato costituito da due distinte unità geotecniche e lito-stratigrafiche, variabili per potenza e posizione in funzione del tratto considerato:

- **Unità geotecnica I** – da p.c. a Orizzonte I: **copertura superficiale e terreno di riporto** costituita da limi argillosi, con proprietà geotecniche complessive mediocri;
- **Unità geotecnica II** – da Orizzonte I a Orizzonte II: depositi alluvionali ciottoloso-ghiaioso-terrosi più o meno alterati, ferrettizzati, costituiti da sabbie e ghiaie grossolane alterate in matrice limo-argillosa, caratteristici del Pleistocene (alluvioni antiche), con proprietà geotecniche da mediocri a discrete, in genere progressivamente crescenti con la profondità.

4.1 Sintesi dei parametri geotecnici del terreno assunti nei calcoli

Sulla scorta delle valutazioni riportate ai paragrafi precedenti ed in riferimento alla documentazione geologica disponibile, il terreno di fondazione, con riferimento all'unità geotecnica II, interessata dalle fondazioni dei manufatti in progetto, può essere caratterizzato, con buona approssimazione e sufficiente cautela, con i seguenti valori geotecnici caratteristici:

PARAMETRI GEOTECNICI TERRENO – UNITÀ GEOTECNICA II	
Peso di volume medio	$\gamma_t \cong 18 \div 20$ kN/m^3
Angolo di resistenza al taglio	$\varphi \cong 26° \div 28°$
Coesione efficace	$c \cong 5 \div 10$ kPa
Modulo di deformazione elastica	$E \cong 30 \div 50$ Mpa

Tabella 6 – Parametri geotecnici di riferimento Unità geotecnica II.

I parametri di resistenza e di deformabilità del terreno sono stati riportati secondo un intervallo di variazione compreso tra un limite minimo ed un limite massimo, opportunamente arrotondati, i quali tengono in considerazione sia delle tolleranze intrinseche della modellazione che di possibili variazioni locali in funzione della singola zona oggetto di scavo e delle relative condizioni al contorno ed operative di cantiere.

Si evidenzia, inoltre, che i valori riportati nella *tabella 6* sono da intendersi come valori caratteristici X_k delle proprietà del terreno. Tali valori, desunti in modo da rappresentare una appropriata stima del valore che influisce sul verificarsi dello stato limite preso in esame

verranno, quindi, opportunamente ridotti nelle verifiche geotecniche a mezzo dell'applicazione di coefficienti parziali di sicurezza γ_M, previsti dal capitolo 6 delle N.T.C.-2018, in modo tale da ottenere i parametri geotecnici di progetto X_d.

Con riferimento alla documentazione geoidrologica di P.R.G.C. e ai pozzi presenti sul territorio, la falda acquifera libera principale presenta una direzione di deflusso idrico orientato mediamente NE, con soggiacenza variabile e compresa tra valori minimi di –2,8 m, verso monte, e massimi di –9,3 m da p.c., nel settore più a valle, comunque sempre in sinistra idrografica rispetto al corso del Torrente Pesio. L'acquifero sospeso presenta, invece, valori di soggiacenza variabili da un minimo di –0,5 m da p.c., nel settore di monte in Loc. Ardite, e –13,0 m da p.c., in coincidenza del settore centrale dell'altopiano, nei pressi della scarpata esposta verso Ovest e prospiciente verso la pianura principale drenata del T. Pesio. L'escursione del livello di falda si attesta su valori dell'ordine del metro.

Si riporta, nel seguito, l'estratto della carta geoidrologica allegata agli elaborati geologici di P.R.G.C.

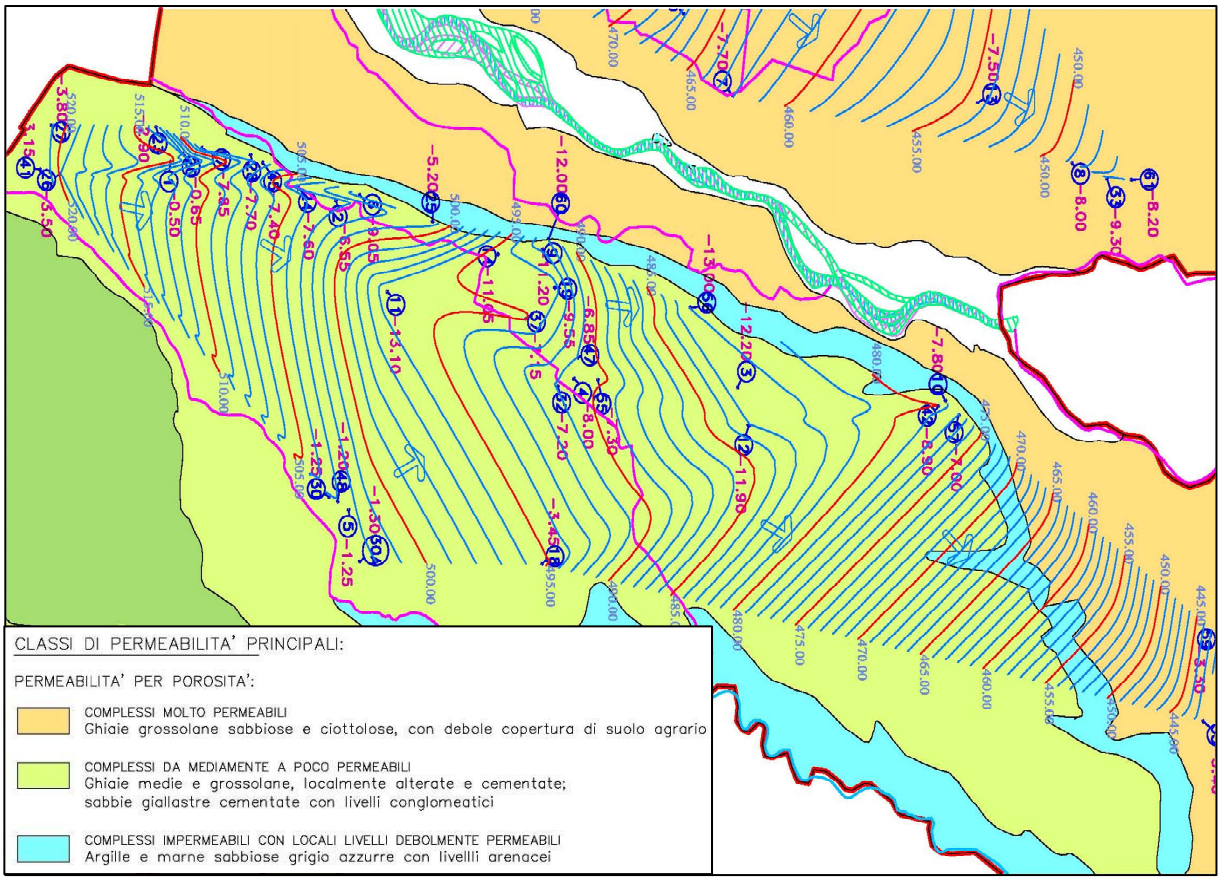

Figura 3 – Estratto carta geoidrologica di P.R.G.C. relativa all'area irrigua in esame.

4.2 Categoria stratigrafica del sottosuolo e condizioni topografiche

La "*risposta sismica locale*" è l'azione sismica quale emerge in "superficie" a seguito delle modifiche in ampiezza, durata e contenuto in frequenza subite trasmettendosi dal substrato rigido, le quali corrispondono a:

- effetti stratigrafici, legati alla successione stratigrafica, alle proprietà meccaniche dei terreni, alla geometria del contatto tra il substrato rigido e i terreni sovrastanti ed alla geometria dei contatti tra gli strati di terreno;
- effetti topografici, legati alla configurazione topografica del piano campagna. La modifica delle caratteristiche del moto sismico per effetto della geometria superficiale del terreno va attribuita alla focalizzazione delle onde sismiche in prossimità della cresta dei rilievi a seguito dei fenomeni di riflessione delle onde sismiche ed all'interazione tra il campo d'onda incidente e quello diffratto; i fenomeni di amplificazione cresta-base aumentano in proporzione al rapporto tra l'altezza del rilievo e la sua larghezza.

In assenza di analisi specifiche della risposta sismica locale, l'accelerazione massima attesa al sito (PGA) può essere valutata, in riferimento al *paragrafo 3.2.2. delle N.T.C.*, con la seguente relazione:

$$a_{max} = S \cdot a_g = (S_S \cdot S_T) \cdot a_g$$

dove:

- S = coefficiente che comprende l'effetto dell'amplificazione stratigrafica (S_S) e dell'amplificazione topografica (S_T) del sito;
- a_g = accelerazione orizzontale massima attesa su sito di riferimento rigido.

Ai fini della definizione dell'azione sismica di progetto si rende, quindi, necessario valutare l'influenza del **profilo stratigrafico,** individuando la categoria di sottosuolo di riferimento, di cui al *paragrafo 3.2.2 delle N.T.C.*-2018. Ciò si consegue determinando il valore della velocità media equivalente $V_{s,30}$ di propagazione delle onde di taglio entro i primi 30 m di profondità al di sotto del piano di fondazione della struttura, per contemplare le potenziali amplificazioni dell'onda sismica dovute alla presenza di condizioni sismostratigrafiche discostantisi dal riferimento rigido.

In considerazione dei sondaggi disponibili e degli approfondimenti di natura geologica e litotecnica è stato, quindi, possibile stimare indirettamente una **categoria stratigrafica del sottosuolo ai fini sismici di tipo "C"**, caratterizzata da: "*Depositi di terreni a grana grossa*

mediamente addensati o terreni a grana fina mediamente consistenti con profondità del substrato superiori a 30 m, caratterizzati da un miglioramento delle proprietà meccaniche con la profondità e da valori di velocità equivalente compresi tra 180 m/s e 360 m/s". A tale categoria, in riferimento alla *tabella 3.2.IV* delle N.T.C.-2018, è stato associato un coefficiente di amplificazione stratigrafico S_S = 1,5.

Nei riguardi, invece, delle eventuali **amplificazioni topografiche**, il sito è classificabile in **categoria "T1"** – "*Pendii con inclinazione media i < 15°*" come definito nelle *N.T.C.-2018, §3.2.2, tab. 3.2.III*. A tale categoria, in riferimento alla tabella 3.2.V delle N.T.C.-2018, è stato associato un coefficiente di amplificazione topografico S_T = 1,0.

Si evidenzia, infine, con riferimento al *paragrafo 7.11.3.4.2* delle N.T.C.-2018 che, essendo il terreno di fondazione, in relazione alle unità geotecniche interessate dalle fondazioni superficiali in progetto, è caratterizzato da una distribuzione granulometrica sostanzialmente esterna alle fasce di attenzione indicate nella *Figura 7.11.1(a)* delle N.T.C. e, come tale, non risulta potenzialmente suscettibile di **liquefazione**. Pertanto, la probabilità che si verifichi il fenomeno della liquefazione entro i terreni interessati dalle opere in progetto è da ritenersi trascurabile e la verifica può essere omessa nel rispetto della normativa tecnica vigente.

5. Parametri di progetto

5.1 Livelli di sicurezza e prestazioni attese

Le opere e le componenti strutturali sono state progettate in modo tale da consentirne la prevista utilizzazione e la futura manutenzione, in forma economicamente sostenibile e con il livello di sicurezza previsto dalla normativa vigente in materia di costruzioni (N.T.C.).

La sicurezza strutturale e le prestazioni attese delle opere sono state, pertanto, valutate in relazione agli stati limite che si possono verificare durante la loro vita nominale, ovvero al raggiungimento delle condizioni per cui le stesse non soddisfano più le esigenze per le quali sono state previste. Pertanto, le analisi di sicurezza strutturale sono state condotte sia nei confronti degli ***Stati Limite Ultimi (SLU),*** verificando cioè la capacità di evitare crolli, perdite di equilibrio e dissesti che possano compromettere l'incolumità delle persone o comportare la perdita di beni, ovvero provocare gravi danni ambientali e sociali, mettendo fuori servizio la/e costruzione/i, sia nei riguardi degli ***Stati Limite di Esercizio (SLE),*** accertando, quindi, la capacità delle strutture di garantire le prestazioni previste per le condizioni di esercizio e di servizio.

La durabilità, intesa come conservazione delle caratteristiche fisiche e meccaniche dei materiali e delle strutture affinché i livelli di sicurezza vengano mantenuti durante tutta la vita utile dell'opera, sarà garantita attraverso la scelta dei materiali di cui al *capitolo 3* e mediante un opportuno dimensionamento delle strutture, comprese le eventuali misure di protezione e manutenzione future.

Con riferimento, quindi, a quanto disposto dai *capitoli 2 e 3* (*tabelle 2.4.1, 2.4.2, 2.4.II e 3.2.I*) e al *paragrafo 7.1 del D.M. 17.01.2018*, ai fini della definizione dei livelli di sicurezza e delle prestazioni attese, alle costruzioni in progetto sono stati attribuiti i seguenti parametri:

- vita nominale: $V_N \geq 50$ anni
- classe d'uso: classe II
- coefficiente d'uso della costruzione: $c_u = 1{,}0$
- periodo di riferimento azione sismica: $V_R \geq 50$
- stati limite considerati nelle verifiche, in relazione all'azione sismica:
  - **SLD**: stato limite di esercizio di danno, con probabilità di superamento nel periodo di riferimento V_R pari all'63%.
  - **SLV**: stato limite ultimo di salvaguardia della vita, con probabilità di superamento nel periodo di riferimento V_R pari al 10%.

In riferimento al *paragrafo 7.2.2 delle N.T.C.* le costruzioni in progetto, soggette all'azione sismica, essendo sostanzialmente interrate, opere di fondazione e contro-terra e prive di specifici dispositivi, saranno verificate in base ad un comportamento strutturale di tipo "*non dissipativo*", in cui gli effetti combinati delle azioni sismiche e delle altre azioni saranno cautelativamente calcolati, indipendentemente dalla tipologia strutturale adottata, senza tener conto delle possibili non linearità di comportamento dei materiali e della geometria dei manufatti.

5.2 Organizzazione strutturale

Come indicato al *Capitolo 1*, le opere in progetto faranno riferimento ad una tipologia strutturale a telaio (edificio filtri) o a pareti singole o accoppiate (manufatti minori di regolazione idraulica), secondo tecniche realizzative consolidate e di comprovata validità. In particolare le costruzioni in esame saranno sostanzialmente caratterizzate da strutture interrate sostanzialmente realizzate in c.c.a. gettato in opera con forma e geometria regolare (simmetrica) sia in pianta che in elevazione, costituite da fondazioni continue di tipo diretto mutuamente vincolate ai pilastri e/o alle pareti in elevazione con vincolo di tipo ad incastro. Le solette di copertura dei manufatti minori sono previste ad un'unica campata da realizzarsi in c.c.a. direttamente in opera.

5.3 Valutazione delle azioni

Le azioni considerate ai fini dei dimensionamenti strutturali delle opere in progetto sono così riassumibili:

1) carichi permanenti dovuti al peso proprio dei materiali strutturali;
2) carichi permanenti portati, non strutturali;
3) azioni variabili (sovraccarichi) relativi alla destinazione d'uso delle opere e alle relative condizioni di esercizio;
4) spinta delle terre a tergo delle opere, valutata in condizioni sismiche;
5) azione del vento;
6) azione della neve;
7) azione sismica, secondo il grado di sismicità caratteristico del sito di

costruzione: zona sismica 3 ai sensi O.P.C.M. n. 3274/2003 e ss.mm.ii..

Viene, quindi, nel seguito riportata una descrizione dettagliata delle suddette azioni:

1) <u>Peso proprio dei materiali strutturali</u>

Relativamente a questa azione si andranno semplicemente a considerare tutte le parti delle opere aventi funzione strutturale e portante.

<u>Peso proprio elementi strutturali:</u>

- strutture in c.c.a.: γ_{cls} = 25,0 kN/m^3.
- strutture in acciaio da carpenteria: γ_{acc} = 78,5 kN/m^3.
- strutture in muratura semipiena in cls: γ_{mur} = 20,0 kN/m^3.

2) <u>Carichi permanenti portati</u>

Sono considerati carichi permanenti non strutturali o portati i carichi non rimovibili durante il normale esercizio delle costruzioni, quali quelli pertinenti a passerelle e/o grigliati pedonali, apparecchiature e organi di manovra e regolazione elettromeccanica, impianti vari, massi di cava eventualmente in corrispondenza dei manufatti, rivestimenti lapidei, sottofondi, pavimentazioni, ecc.. Essi sono stati valutati sulla base delle dimensioni effettive delle opere e dei pesi dell'unità di volume dei materiali costituenti. In linea di massima i carichi permanenti portati saranno assunti, per la verifica d'insieme, come uniformemente ripartiti o, a seconda dei casi, come carichi concentrati linearmente o nodali.

3) <u>Azioni variabili:</u>

Sono costituite dai sovraccarichi verticali uniformemente distribuiti sostanzialmente pertinenti alle aree e zone pedonali accessibili per la manutenzione delle opere e per le operazioni di regolazione e gestione idrica. Tali azioni, con riferimento alla *tabella 3.1.II del D.M. 17.01.2018 (N.T.C.)*, sono state cautelativamente considerate pari a 5,00 kN/m^2.

In corrispondenza della porzione di platea del locale tecnico accessibile da automezzi per manutenzione è stato, inoltre, considerato un sovraccarico variabile uniformemente distribuito pari a 10 kN/m^2.

4) <u>Spinta delle terre</u>

I manufatti in progetto verranno sollecitati dalle azioni verticali ed orizzontali rispettivamente trasmesse in fase di esercizio dal terreno di ricoprimento e da quello di rinfianco. Sulla base delle indicazioni fornite ai paragrafi precedenti sulle caratteristiche geomeccaniche del terreno e secondo i criteri dell'EC7 e delle N.T.C.-2018, nei calcoli di dimensionamento e verifica

geotecnica e strutturale sono state assunte, per il terreno di fondazione alla quota di imposta delle fondazioni e a tergo delle opere in progetto, le caratteristiche geomeccaniche riportate nella *tabella 6* del *paragrafo 4.1*.

Si avranno, pertanto, le seguenti componenti di azione:

- Azione verticale dovuta al terreno di ricoprimento (applicata sullo sporto o sulla suola di monte della platea di fondazione delle opere):

$$q_{v,terreno} = \Delta h \cdot \gamma_t$$

in cui Δh è l'altezza del terreno di ricoprimento dell'opera e γ_t il relativo peso di volume.

- Azione orizzontale dovuta al terreno di rinfianco (applicata sulle pareti laterali dei manufatti e delle opere interrate):

tale azione si traduce in carico uniformemente distribuito variabile linearmente con la profondità, la cui risultante è una spinta S dipendente dalle caratteristiche geomeccaniche del terreno e per la cui determinazione ci si è avvalsi della teoria di Coulomb. Tale metodo ipotizza superfici di scorrimento piane passanti per la base della parete e le cui espressioni dei coefficienti di spinta possono essere ottenute analizzando l'equilibrio limite di un cuneo di terreno delimitato dal paramento interno della parete, dalla superficie di scorrimento e dalla superficie limite del terrapieno.

Il calcolo delle spinte con tale metodologia comporta l'assunzione delle seguenti ipotesi:

- materiale omogeneo ed isotropo dotato di solo attrito;
- superficie di rottura piana;
- superficie limite del terrapieno piana (anche inclinata ma non irregolare);
- resistenza di attrito uniformemente distribuita lungo la superficie di rottura;
- attrito non nullo tra terreno e muro;
- paramento del muro non necessariamente verticale;
- condizioni di stato di equilibrio limite;
- condizioni di rottura in stato di deformazione piana.

Pertanto per un terreno incoerente, in condizioni di assenza di falda, la spinta S del terreno può essere determinata con la seguente espressione:

$$S = \frac{1}{2} \cdot \gamma_t \cdot k_a \cdot h^2$$

mentre il carico distribuito avrà intensità massima, in corrispondenza del piede della parete, pari a:

$$q_{h,terreno} = k_a \cdot h \cdot \gamma_t$$

dove:

k_a = coefficiente di spinta attiva, determinato tramite l'equazione di *Muller – Breslau*:

$$k_a = \frac{\cos^2(\varphi' - \beta)}{\cos^2\beta \cdot \cos(\beta+\delta)\left[1+\sqrt{\frac{sen(\delta+\varphi')\cdot sen(\varphi'-i)}{\cos(\beta+\delta)\cdot\cos(\beta-i)}}\right]^2}$$

h = altezza della parte interrata di parete;

φ' = angolo di resistenza a taglio che caratterizza il terreno.

<u>Incremento dinamico della spinta del terreno in condizioni sismiche</u>

Ai fini dell'analisi della spinta delle terre sotto l'azione sismica, in riferimento alle indicazioni fornite dal *paragrafo 7.11.3.5.2* del D.M. 17.01.2018 e dall'Eurocodice 8 – parte 5 (UNI EN 1998-5), verrà utilizzato il metodo pseudo-statico di *Mononobe – Okabe*, quale estensione in campo dinamico del criterio di Coulomb precedentemente illustrato. Tale metodo considera che il cuneo di terreno compreso tra la superficie di rottura e la parete del muro ("cuneo di rottura") si comporti come un corpo rigido soggetto ad un'accelerazione orizzontale a_h e verticale a_v uniformi all'interno del cuneo.

L'azione sismica è, quindi, rappresentata da un'azione statica equivalente, costante nello spazio e nel tempo, proporzionale al peso W dell'opera di sostegno, del volume di terreno a tergo dell'opera stessa, supposto in stato di equilibrio limite attivo, e gli eventuali sovraccarichi agenti sul volume suddetto ed è dipendente dalle caratteristiche del moto sismico atteso nel volume di terreno potenzialmente instabile e dalla capacità di tale volume di subire spostamenti senza significative riduzioni di resistenza.

Nelle verifiche allo stato limite ultimo, in mancanza di studi specifici, le componenti orizzontale e verticale di tale forza possono esprimersi come $F_h = k_h \cdot W$ ed $F_v = k_v \cdot W$, con k_h e k_v rispettivamente pari ai coefficienti sismici orizzontale e verticale:

$$k_h = \beta_m \cdot \frac{a_{max}}{g}$$

$$k_v = \pm 0{,}5 \cdot k_h$$

dove:

βm = coefficiente di riduzione dell'accelerazione massima attesa al sito;

a_{max} = accelerazione orizzontale massima attesa al sito;

g = accelerazione di gravità.

In assenza di analisi specifiche della risposta sismica locale, l'accelerazione massima

attesa al sito può essere valutata con la relazione:

$$a_{max} = S \cdot a_g = (S_S \cdot S_T) \cdot a_g$$

dove:

- S = coefficiente che comprende l'effetto dell'amplificazione stratigrafica (S_S) e dell'amplificazione topografica (S_T) del sito;
- a_g = accelerazione orizzontale massima attesa su sito di riferimento rigido.
- β_m è un fattore di riduzione dell'accelerazione massima attesa al sito, dipendente dallo spostamento ammissibile dell'opera e definito dal *paragrafo 7.11.6.2.1 delle N.T.C.-2018,* pari a 0,38 nelle verifiche a stato limite ultimo (SLV) e pari a 0,47 nelle verifiche a stato limite di esercizio (SLD). Per le verifiche a ribaltamento i suddetti valori vanno incrementati del 50%. Per pareti o muri impediti di muoversi β_m è posto = 1,0.

Detto W il peso del cuneo di rottura, l'effetto sismico è, quindi, portato in conto come una forza statica equivalente di componenti k_hW in orrizontale e $\pm k_vW$ in verticale.

Essendo le opere in progetto delle strutture rigide, con pareti verticali e terrapieno orizzontale, l'azione di incremento dinamico della spinta del terreno vale, pertanto:

$$q_{Sh,terreno} = k_h \cdot h \cdot \gamma_t$$

$$q_{Vh,terreno} = \pm 0{,}5 \cdot k_h \cdot h \cdot \gamma_t$$

Pertanto il valore della spinta complessiva del terreno in condizioni sismiche (statica + sismica) vale:

$$S_{tot} = \frac{1}{2} \cdot \gamma_t (1 \pm k_v) \cdot k_a \cdot h^2$$

Nel caso specifico, invece, in cui il terreno a tergo delle strutture possa essere considerato in condizioni prossime a quelle di riposo, ovvero per le strutture rigide a sezione scatolare previste per la realizzazione di scatolari, pozzetti e manufatti analoghi, l'incremento dovuto al sisma relativo al terreno è stato stimato attraverso l'espressione proposta da *Wood*, la quale risulta indipendente dai parametri di resistenza del terreno che si assume ancora in campo elastico e che, per tali tipi di strutture (rigide appunto) difficilmente raggiunge le condizioni limite di rottura:

$$\Delta S = \frac{a_g}{g} \cdot S_s \cdot \gamma \cdot H^2$$

con:

- a_g/g l'accelerazione sismica di progetto;
- S_s il fattore correttivo stratigrafico.

Il carico sismico sarà, in tal caso, equiparabile ad un carico distribuito applicato linarmente sulle pareti delle strutture, con intensità pari a:

$$q_{sis} = \Delta S / H$$

I **muri di sostegno** e/o le **pareti controterra,** incluse quelle dei pozzetti e dei manufatti interrati in progetto, devono soddisfare le condizioni di stabilità globale con i metodi di analisi di cui al *§ 7.11.6.2.1* delle N.T.C.-2018 e le verifiche di sicurezza di cui ai *§ 6.5.3.1.1 e 7.11.6.2.2*, nelle quali si richiede il rispetto della *condizione 6.2.1* delle N.T.C.-2018, con le prescrizioni di cui al *§ 7.11.1*. Le azioni da considerare nelle analisi di sicurezza delle fondazioni sono fornite dalla spinta esercitata dal terrapieno, dalle azioni gravitazionali permanenti e dalle azioni inerziali agenti nel muro, nel terreno e negli eventuali sovraccarichi. In aggiunta all'analisi della sicurezza nei confronti dello stato limite ultimo, devono essere condotte verifiche nei confronti dello stato limite di danno. In particolare, gli spostamenti permanenti indotti dal sisma devono essere compatibili con la funzionalità dell'opera e con quella di eventuali strutture o infrastrutture interagenti con essa.

Azione del terreno nelle verifiche di stabilità dei pendii e fronti scavo

Anche l'analisi delle condizioni di stabilità dei pendii in condizioni sismiche può essere eseguita mediante metodi pseudostatici nei quali l'azione sismica è rappresentata da un'azione statica equivalente, costante nello spazio e nel tempo, proporzionale al peso W del volume di terreno potenzialmente instabile. Tale forza dipende dalle caratteristiche del moto sismico atteso nel volume di terreno potenzialmente instabile e dalla capacità di tale volume di subire spostamenti senza significative riduzioni di resistenza.

Nelle verifiche allo stato limite ultimo, in mancanza di studi specifici, le componenti orizzontale e verticale di tale forza possono esprimersi come $F_h = k_h \cdot W$ ed $F_v = k_v \cdot W$, con k_h e k_v rispettivamente pari ai coefficienti sismici orizzontale e verticale:

$$k_h = \beta_s \cdot \frac{a_{max}}{g}$$

$$k_v = \pm 0{,}5 \cdot k_h$$

dove:

βs = coefficiente di riduzione dell'accelerazione massima attesa al sito;

a_{max} = accelerazione orizzontale massima attesa al sito;

g = accelerazione di gravità.

I valori di βs sono riportati nella *tabella 7.11.I* delle N.T.C.-2018 al variare della categoria di sottosuolo e dell'accelerazione orizzontale massima attesa su sito di riferimento rigido:

	Categoria di sottosuolo	
	A	**B, C, D, E**
	β_s	β_s
$0,2 < a_g(g) \leq 0,4$	0,30	0,28
$0,1 < a_g(g) \leq 0,2$	0,27	0,24
$a_g(g) \leq 0,1$	0,20	0,20

Per quanto riguarda, invece, specificatamente i **fronti scavo**, si adotteranno i seguenti valori del coefficiente di riduzione dell'accelerazione massima attesa al sito:

- βs = 0.38 nelle verifiche dello stato limite ultimo (SLV)
- βs = 0.47 nelle verifiche dello stato limite di esercizio (SLD).

<u>Spinta del terreno in presenza di falda</u>

In presenza di falda o di interferenza delle lavorazioni e delle fasi di cantiere con il livello idrico dell'invaso, per la porzione di terreno posta al di sotto di quest'ultimo, verrà applicata un'aliquota di spinta esercitata dal terreno, da valutarsi in termini di tensioni efficaci, e da un'aliquota aggiuntiva dovuta dall'azione dall'acqua in termini idrostatici.

Si evidenzia, inoltre, in considerazione delle caratteristiche litologiche e stratigrafiche del terreno in sito, che l'azione esercitata a tergo delle pareti delle strutture, è stata cautelativamente valutata assumendo il terreno permeabile in condizioni dinamiche di falda, portando in conto, oltre all'azione idrostatica della falda, anche l'effetto idrodinamico, determinato sempre tramite l'espressione di *Westergaard*.

Dunque, la spinta complessiva assunta nei calcoli, in condizioni sismiche, al di sotto della potenza di falda e con terreno permeabile in condizioni dinamiche di quest'ultima, risulta data dalla seguente espressione:

$$S_{tot} = \frac{1}{2} \cdot \gamma_t (1 \pm k_v) \cdot k_a \cdot h^2 + \frac{1}{2} \cdot \gamma_w \cdot H^2 + E_{wd}$$

5) <u>Azione del vento</u>

Per quanto riguarda l'azione del vento, essa sarà agente esclusivamente nei confronti del nuovo edificio filtri e controllo irriguo ed è stata ricondotta ad un'azione statica equivalente secondo l'espressione fornita al *paragrafo 3.3.4 delle N.T.C. e relativa Circolare n. 7/2019:*

$$p = q_b \cdot c_e \cdot c_p \cdot c_d$$

dove:

- q_b = pressione cinetica di riferimento, data dall'espressione:

$$q_b = \frac{1}{2} \cdot \rho \cdot v_b^2$$

in cui la velocità di base v_b è il valore medio su 10 minuti, a 10 m di altezza sul suolo su un terreno pianeggiante riferito ad un periodo di ritorno, per il caso in esame, pari a 50 anni (vita nominale di progetto):

$$v_b = v_{b,0} \cdot c_a$$

dove c_a è il coefficiente di altitudine fornito dalla relazione

$$c_a = 1 \qquad \text{per } a_s \le a_0$$

$$c_a = 1 + k_s \left(\frac{a_s}{a_0} - 1 \right) \qquad \text{per } a_0 < a_s \le 1500 \text{ m}$$

a_s è l'altitudine sul livello del mare del sito ove sorge la costruzione.

e $V_{b,0}$, a_0 e k_s sono parametri forniti nella *tabella 3.3.I delle N.T.C.*

Tab. 3.3.I -*Valori dei parametri* $v_{b,0}$, a_0, k_s

Zona	Descrizione	$v_{b,0}$ [m/s]	a_0 [m]	k_s
1	Valle d'Aosta, Piemonte, Lombardia, Trentino Alto Adige, Veneto, Friuli Venezia Giulia (con l'eccezione della provincia di Trieste)	25	1000	0,40
2	Emilia Romagna	25	750	0,45
3	Toscana, Marche, Umbria, Lazio, Abruzzo, Molise, Puglia, Campania, Basilicata, Calabria (esclusa la provincia di Reggio Calabria)	27	500	0,37
4	Sicilia e provincia di Reggio Calabria	28	500	0,36
5	Sardegna (zona a oriente della retta congiungente Capo Teulada con l'Isola di Maddalena)	28	750	0,40
6	Sardegna (zona a occidente della retta congiungente Capo Teulada con l'Isola di Maddalena)	28	500	0,36
7	Liguria	28	1000	0,54
8	Provincia di Trieste	30	1500	0,50
9	Isole (con l'eccezione di Sicilia e Sardegna) e mare aperto	31	500	0,32

Per la Zona 1 (Piemonte) e per altitudini inferiori a 1000 m s.l.m., la velocità di base è uguale a 25 m/s (V_b=$V_{b,0}$=25 m/s). e la densità dell'aria ρ assunta convenzionalmente costante e pari a 1,25 kg/m^3.

- c_e = coefficiente di esposizione, espresso tramite la relazione riportata al *paragrafo 3.3.7 nel D.M. 17/01/2018:*

$$c_e = k_r^2 \cdot c_t \cdot \ln\left(\frac{z}{z_0}\right) \cdot \left[7 + c_t \cdot \ln\left(\frac{z}{z_o}\right)\right] \quad per\, z \geq z_{\min}$$

$$c_e = c_e(z_{\min}) \quad per\, z < z_{\min}$$

dove:

z è l'altezza sul suolo della costruzione, pari a 5,0 m per l'edificio filtri;

k_r , z_0 , z_{min} sono assegnati dalla *tabella 3.3.II delle N.T.C.* in funzione della categoria di esposizione del sito ove sorge la costruzione, coincidente con la categoria III;

c_t è il coefficiente di topografia, assunto pari a 1,0.

<u>Per l'edificio filtri e regolazione si hanno, quindi, i seguenti parametri di calcolo:</u>

altitudine: 530 m s.l.m.; z_{min} = 5 m; z_0 = 0,1 e k_r = 0,2; $c_e \cong 1{,}71$;

- c_p = coefficiente di forma, funzione della tipologia e della geometria della costruzione e del suo orientamento rispetto alla direzione del vento;
- c_d = coefficiente dinamico, con cui si tiene conto degli effetti riduttivi associati alla non contemporaneità delle massime pressioni locali e degli effetti amplificativi dovuti alle vibrazioni strutturali (assunto pari a 1).

L'azione del vento sulle **pareti laterali** della costruzione sarà, quindi, pari a:

<u>Azione sopravento:</u> $p = q_b \cdot c_e \cdot c_p \cdot c_d = 0{,}39_{(T_r=50\ anni)} \cdot 1{,}71 \cdot 0{,}8 \cdot 1{,}0 \cong 0{,}55\ kN/m^2$

<u>Azione sottovento:</u> $p = q_b \cdot c_e \cdot c_p \cdot c_d = 0{,}39_{(T_r=50\ anni)} \cdot 1{,}71 \cdot 0{,}5 \cdot 1{,}0 \cong -0{,}33\ kN/m^2$

L'azione del vento sulle **falde di copertura** della costruzione sarà, invece, pari a:

<u>Azione sopravento:</u> $p = q_b \cdot c_e \cdot c_p \cdot c_d = 0{,}39_{(T_r=50\ anni)} \cdot 1{,}71 \cdot 1{,}06 \cdot 1{,}0 \cong 0{,}71\ kN/m^2$

<u>Azione sottovento:</u> $p = q_b \cdot c_e \cdot c_p \cdot c_d = 0{,}39_{(T_r=50\ anni)} \cdot 1{,}71 \cdot 0{,}5 \cdot 1{,}0 \cong -0{,}45\ kN/m^2$

6) <u>Azione della neve</u>

Il sovraccarico accidentale da neve viene calcolato in base ai disposti del *paragrafo 3.4. del D.M. 17/01/2018* e secondo la seguente equazione:

$$q_s = \mu_i \cdot q_{sk} \cdot C_E \cdot C_t$$

dove:

- q_{sk}, espresso in kN/m^2 è il valore di riferimento del carico neve al suolo assunto con un tempo di ritorno pari a 50 anni (vita nominale di progetto) che, per strutture ricadenti nella Zona geografica 1 – Alpina (Provincia di Biella), assume i seguenti valori:

$$q_{sk} = 1{,}50 \cdot 1{,}14\ kN/m^2 \quad \text{per } a_s < 200 \text{ m s.l.m.}$$

$$q_{sk} = 1{,}39 \cdot 1{,}14 \cdot [1 + (a_s/728)^2]\ kN/m^2 \quad \text{per } a_s > 200 \text{ m s.l.m.}$$

con a_s pari all'altitudine misurata in m s.l.m. del sito di calcolo ed assunta pari a circa 535 m s.l.m. con riferimento alle costruzioni in progetto con i presenti lavori:

- μ_i è il coefficiente di forma della copertura, definito al *paragrafo 3.4.3. delle N.C.T.* e, in considerazione della presenza di coperture inclinate di circa 19°, è assunto pari a 0,8;
- C_E e Ct rappresentano rispettivamente il coefficiente di esposizione e il coefficiente termico; il primo, per il caso in esame, relativo all'edificio tecnico, in riferimento al *paragrafi 3.4.4 delle N.T.C.* assume un valore di 1,0. Il secondo invece, in riferimento al *paragrafi 3.4.5 delle N.T.C.* viene posto ugule a 1,0.

Si avrà, pertanto, il seguente carico neve di progetto:

<u>Carico neve di progetto:</u> $q_s = \mu_i \cdot q_{sk} \cdot C_E \cdot C_t$ = 0,8 x 2,14 (Tr 50 anni) x 1,0 x 1,0 ≈ 1,7 kN/m^2

5.4 Azione sismica

Le azioni sismiche di progetto, in base alle quali si è valutato il rispetto dei diversi stati limite considerati, sono state determinate a partire dalla "***pericolosità sismica di base***" del sito, definita in termini di accelerazione orizzontale massima attesa a_g in condizioni di campo libero su sito di riferimento rigido con superficie topografica orizzontale, nonché di ordinate dello spettro di risposta elastico in accelerazione ad essa corrispondente $S_e(T)$, con riferimento a prefissate probabilità di eccedenza P_{VR} nel periodo di riferimento V_R, in funzione dello specifico stato limite assunto per le verifiche.

La definizione delle forme spettrali, per ciascuna delle probabilità di superamento nel periodo di riferimento V_R, avviene a partire dai valori dei seguenti parametri su sito di riferimento rigido orizzontale:

- a_g = accelerazione orizzontale massima al sito;
- F_0 = valore massimo del fattore di amplificazione dello spettro in accelerazione orizzontale;
- T_C^* = periodo di inizio del tratto a velocità costante dello spettro in accelerazione orizzontale.

Il modello di riferimento per la descrizione del moto sismico sul piano di fondazione è, quindi, definito dallo spettro di risposta elastico; esso, per strutture con periodo fondamentale

minore o uguale a 4,0 s, è costituito da una forma spettrale (spettro normalizzato) riferita ad uno smorzamento convenzionale del 5% e considerata indipendente dal livello di sismicità, moltiplicata per il valore della accelerazione massima convenzionale del terreno fondale a_g che caratterizza il sito. Sia la forma spettrale che il valore di a_g variano al variare della probabilità di superamento nel periodo di riferimento P_{VR}. Il moto può decomporsi in tre componenti ortogonali di cui una verticale. In via semplificata gli spettri delle due componenti orizzontali possono considerarsi eguali ed indipendenti. Lo spettro di risposta elastico della componente orizzontale è, quindi, definito dalle espressioni seguenti:

$$0 \le T < T_B \qquad S_e(T) = a_g \cdot S \cdot \eta \cdot F_o \cdot \left[\frac{T}{T_B} + \frac{1}{\eta \cdot F_o}\left(1 - \frac{T}{T_B}\right) \right]$$

$$T_B \le T < T_C \qquad S_e(T) = a_g \cdot S \cdot \eta \cdot F_o$$

$$T_C \le T < T_D \qquad S_e(T) = a_g \cdot S \cdot \eta \cdot F_o \cdot \left(\frac{T_C}{T} \right)$$

$$T_D \le T \qquad S_e(T) = a_g \cdot S \cdot \eta \cdot F_o \cdot \left(\frac{T_C T_D}{T^2} \right)$$

nelle quali T ed S_e sono rispettivamente il periodo di vibrazione e l'accelerazione spettrale orizzontale e dove:

- a_g = accelerazione orizzontale massima su sito di riferimento rigido orizzontale;
- $S = S_S \cdot S_T$ è un fattore che tiene conto della categoria del suolo di fondazione (S_S) e delle condizioni topografiche (S_T), definite dalla *tabella 3.2.IV E 3.2.V delle N.T.C.*;
- η = fattore che altera lo spettro elastico per smorzamenti viscosi convenzionali ξ diversi dal 5 %, mediante la relazione seguente:

$$\eta = \sqrt{10/(5+\xi)} \ge 0{,}55$$

  dove ξ (espresso in percentuale) è valutato sulla base di materiali, tipologia strutturale e terreno di fondazione;
- F_0 = fattore che quantifica l'amplificazione spettrale massima, su sito di riferimento rigido orizzontale, con vaore minimo pari a 2,2;
- T_B, T_C, T_D = periodi che separano i diversi rami dello spettro (tratto ad accelerazione costante, tratto a velocità costante e tratto a spostamento costante), dipendenti dalla categoria del suolo di fondazione.

Lo spettro di risposta elastico della componente verticale è, invece, definito dalle espressioni seguenti:

$$0 \le T < T_B \qquad S_{ve}(T) = a_g \cdot S \cdot \eta \cdot F_v \cdot \left[\frac{T}{T_B} + \frac{1}{\eta \cdot F_v} \left(1 - \frac{T}{T_B} \right) \right]$$

$$T_B \le T < T_C \qquad S_{ve}(T) = a_g \cdot S \cdot \eta \cdot F_v$$

$$T_C \le T < T_D \qquad S_{ve}(T) = a_g \cdot S \cdot \eta \cdot F_v \cdot \left(\frac{T_C}{T} \right)$$

$$T_D \le T \qquad S_{ve}(T) = a_g \cdot S \cdot \eta \cdot F_v \cdot \left(\frac{T_C \cdot T_D}{T^2} \right)$$

dove T e S_{ve} sono, rispettivamente, periodo di vibrazione ed accelerazione spettrale verticale e F_v è il fattore che quantifica l'amplificazione spettrale massima, in termini di accelerazione orizzontale massima del terreno a_g su sito di riferimento rigido orizzontale, mediante la relazione:

$$F_v = 1{,}35 \cdot F_0 \cdot \left(\frac{a_g}{g} \right)^{0,5}$$

I valori di a_g , F_o, S e η sono definiti nel *§ 3.2.3.2.1 delle N.T.C.* per le componenti orizzontali mentre i valori di S_S, T_B,T_C e T_D, salvo più accurate determinazioni, sono quelli riportati nella *tabella 3.2.VI. delle N.T.C.*, in funzione della categoria di sottosuolo.

Per gli **stati limite di esercizio** lo spettro di progetto $S_d(T)$ da utilizzare, sia per le componenti orizzontali che per la componente verticale, è lo spettro elastico corrispondente, riferito alla probabilità di superamento nel periodo di riferimento P_{VR} considerata.

Nelle verifiche agli **stati limite ultimi** in generale le capacità dissipative delle strutture vengono messe in conto attraverso un'opportuna riduzione delle forze elastiche, tenendo conto in modo semplificato della capacità dissipativa anelastica della struttura, della sua sovraresistenza, dell'incremento del suo periodo proprio a seguito delle plasticizzazioni. In tal caso, lo spettro di progetto $S_d(T)$ utilizzato sia per le componenti orizzontali, sia per la componente verticale, è lo spettro elastico corrispondente riferito alla probabilità di superamento nel periodo di riferimento P_{VR} considerata, con le ordinate ridotte sostituendo nelle formule sopra riportate il parametro η con *1/q*, dove *q* rappresenta il *fattore di struttura* dell'opera. In relazione a quanto specificato dai *paragrafi 7.2.5 e 7.3.1 del D.M. 17.01.2018*, per quanto riguarda le componenti orizzontali, dovendo le fondazioni superficiali e le opere controterra rimanere in campo elastico, verrà cautelativamente assunto un valore q unitario, mentre per le componenti verticali verrà assunto un valore pari a 1,5.

5.4.1 Parametri sismici di progetto

Con la D.G.R. n. 65-7656 del 21.05.2014 e ss.mm.ii. la Regione Piemonte ha recepito la classificazione sismica introdotta dall'O.P.C.M. 3274/2003, classificando il sito interessato dai presenti lavori in zona sismica 3.

Le Norme Tecniche per le Costruzioni di cui al D.M. 17.01.2018 e relativa circolare del 21 gennaio 2019 n. 7 C.S.LL.PP., hanno, quindi, introdotto un nuovo criterio, "*sito-dipendente*", per la valutazione delle azioni sismiche attese al sito. Data la sostanziale omogeneità sia della tipologia costruttiva delle opere che della pericolosità sismica del sito interessato dai lavori (zona sismica 3), nonché delle caratteristiche geomeccaniche del terreno di fondazione, la determinazione dei parametri di riferimento dell'azione sismica è stata cautelativamente effettuata in relazione al Comune amministrativo di riferimento (Comune di Pianfei), quale prevalente nell'ambito dello sviluppo della rete irrigua in progetto. In relazione, quindi, alle prescrizioni di cui al *paragrafo 3.2* del Decreto Ministeriale 17.01.2018 e alle specificità litografiche e stratigrafiche del sito desumibili dalle prove in sito disponibili, si sono definiti i seguenti parametri dell'azione e della pericolosità sismica del sito di progetto:

- sito di intervento e zona sismica: Comune di Pianfei (CN) – zona 3
- coordinate del sito (ED50): Longitudine: 7.7125°; Latitudine: 44.3730°
- categoria del sottosuolo: C (*)
- categoria topografica: T1
- amplificazione stratigrafica: $S_S = 1,5$
- amplificazione topografica: $S_T = 1,0$

(*) Depositi di terreni a grana grossa mediamente addensati o terreni a grana fina mediamente consistenti con profondità del substrato superiori a 30 m, caratterizzati da un miglioramento delle proprietà meccaniche con la profondità e da valori di velocità equivalente compresi tra 180 m/s e 360 m/s.

Accertata la compatibilità dei parametri stratigrafici e geomorfologici del sito, l'azione sismica è stata, quindi, in definitiva, determinata applicando alla costruzione un'accelerazione corrispondente allo spettro di risposta desunto dalla normativa nazionale in funzione della pericolosità sismica del sito, delle caratteristiche dell'opera e degli stati limite assunti per le verifiche (SLO, SLD, SLV e SLC). Gli spettri di risposta e i relativi parametri sismici sono stati ricavati con l'ausilio dell'applicazione di calcolo "*Spettri-N.T.C.*" redatta dal *Consiglio Superiore dei Lavori Pubblici* e sono stati, quindi, calcolati adottando i parametri sopra riportati e quelli elencati al *paragrafo 4.2.*

Si riporta, quindi, nel seguito la caratterizzazione sismica specifica per il sito oggetto di

intervento:

Valori dei parametri a_g, F_0 e T_C^* per i periodi di ritorno T_R di riferimento:

T_R [anni]	a_g [g]	F_o [-]	T_C^* [s]
30	0.030	2.478	0.197
50	0.038	2.545	0.212
72	0.045	2.537	0.230
101	0.052	2.551	0.242
140	0.058	2.568	0.256
201	0.067	2.561	0.271
475	0.091	2.572	0.295
975	0.113	2.623	0.309
2475	0.147	2.704	0.323

Valori dei parametri a_g, F_0 e T_C^* per i periodi di ritorno T_R associati a ciascuno S.L.

SLATO LIMITE	T_R [anni]	a_g [g]	F_o [-]	T_C^* [s]
SLO	30	0.030	2.478	0.197
SLD	50	0.038	2.545	0.213
SLV	475	0.091	2.572	0.295
SLC	975	0.113	2.623	0.309

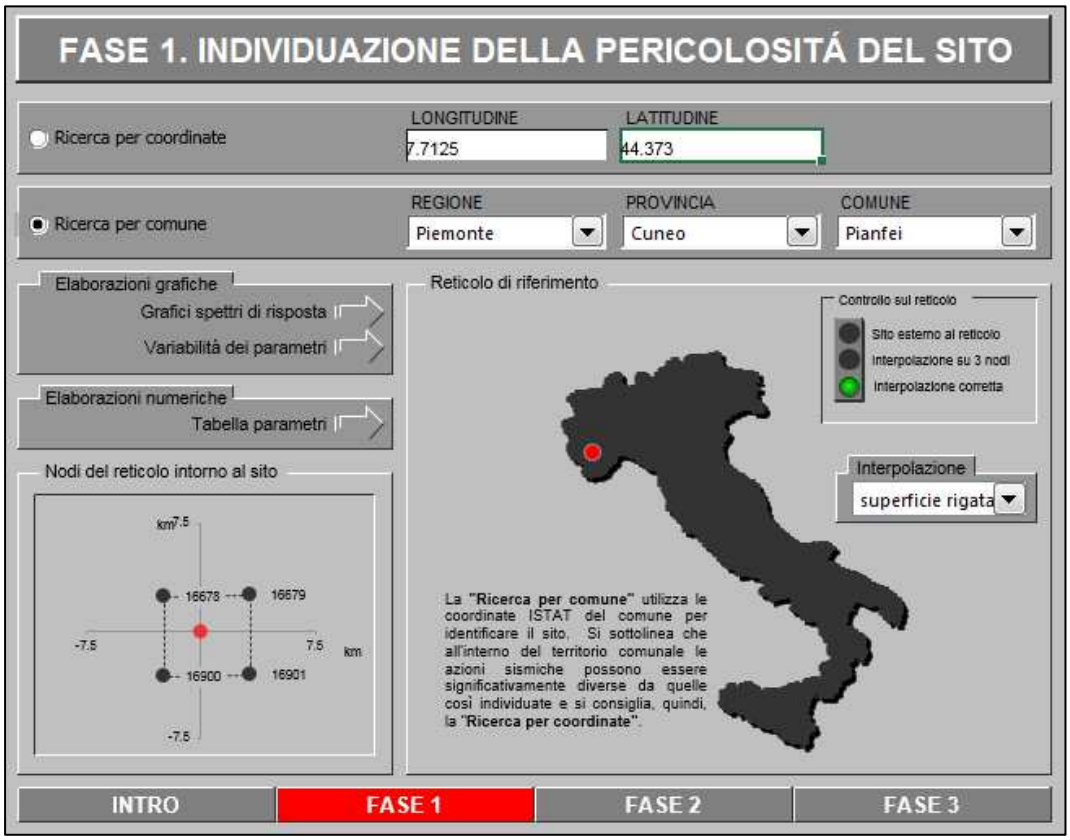
FASE 1. INDIVIDUAZIONE DELLA PERICOLOSITÁ DEL SITO
Ricerca per coordinate
LONGITUDINE
7.7125
LATITUDINE
44.373
Ricerca per comune
REGIONE
Piemonte
PROVINCIA
Cuneo
COMUNE
Pianfei
Elaborazioni grafiche
Grafici spettri di risposta
Variabilità dei parametri
Elaborazioni numeriche
Tabella parametri
Nodi del reticolo intorno al sito
km7.5
16678
16679
-7.5
7.5
km
16900
16901
-7.5
Reticolo di riferimento
Controllo sul reticolo
Sito esterno al reticolo
Interpolazione su 3 nodi
Interpolazione corretta
Interpolazione
superficie rigata
La "Ricerca per comune" utilizza le coordinate ISTAT del comune per identificare il sito. Si sottolinea che all'interno del territorio comunale le azioni sismiche possono essere significativamente diverse da quelle così individuate e si consiglia, quindi, la "Ricerca per coordinate".
INTRO
FASE 1
FASE 2
FASE 3

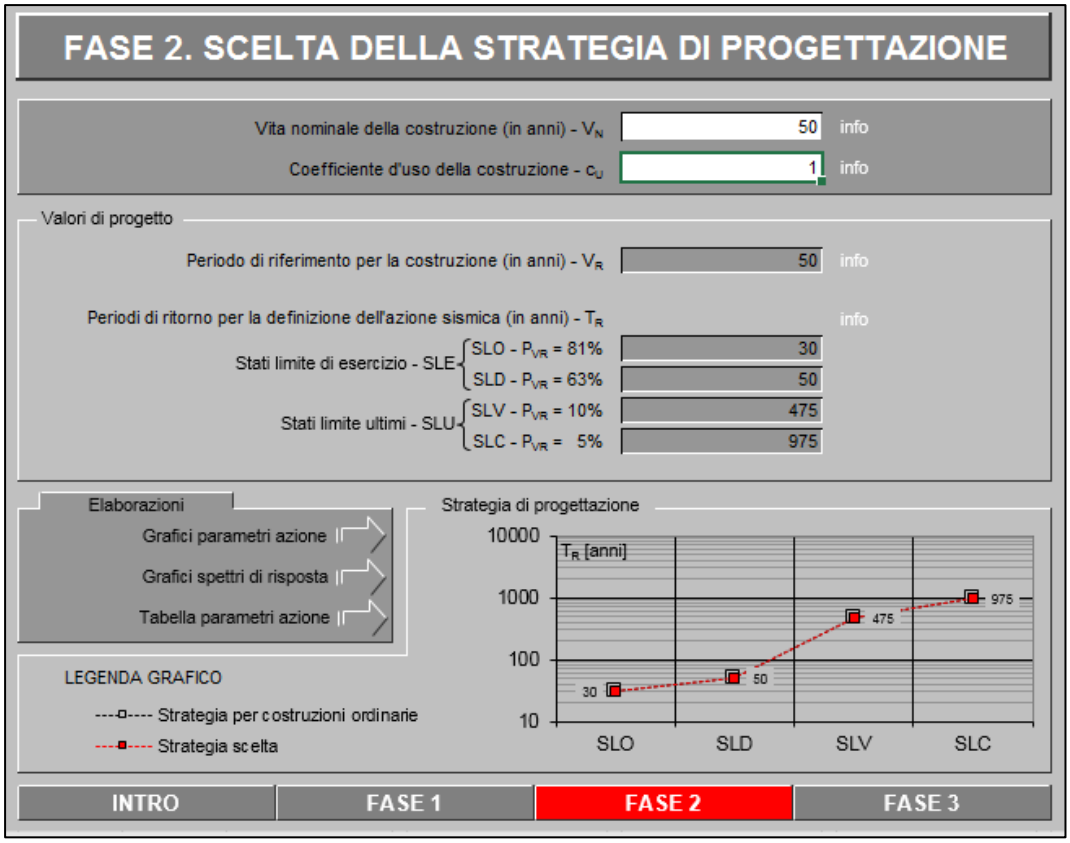
FASE 2. SCELTA DELLA STRATEGIA DI PROGETTAZIONE
Vita nominale della costruzione (in anni) - V_N
50
info
Coefficiente d'uso della costruzione - c_U
1
info
Valori di progetto
Periodo di riferimento per la costruzione (in anni) - V_R
50
info
Periodi di ritorno per la definizione dell'azione sismica (in anni) - T_R
info
Stati limite di esercizio - SLE
SLO - P_{VR} = 81%
30
SLD - P_{VR} = 63%
50
Stati limite ultimi - SLU
SLV - P_{VR} = 10%
475
SLC - P_{VR} = 5%
975
Elaborazioni
Grafici parametri azione
Grafici spettri di risposta
Tabella parametri azione
Strategia di progettazione
T_R [anni]
10000
1000
100
10
30
50
475
975
SLO
SLD
SLV
SLC
LEGENDA GRAFICO
Strategia per costruzioni ordinarie
Strategia scelta
INTRO
FASE 1
FASE 2
FASE 3

STATO LIMITE DI DANNO (SLD)

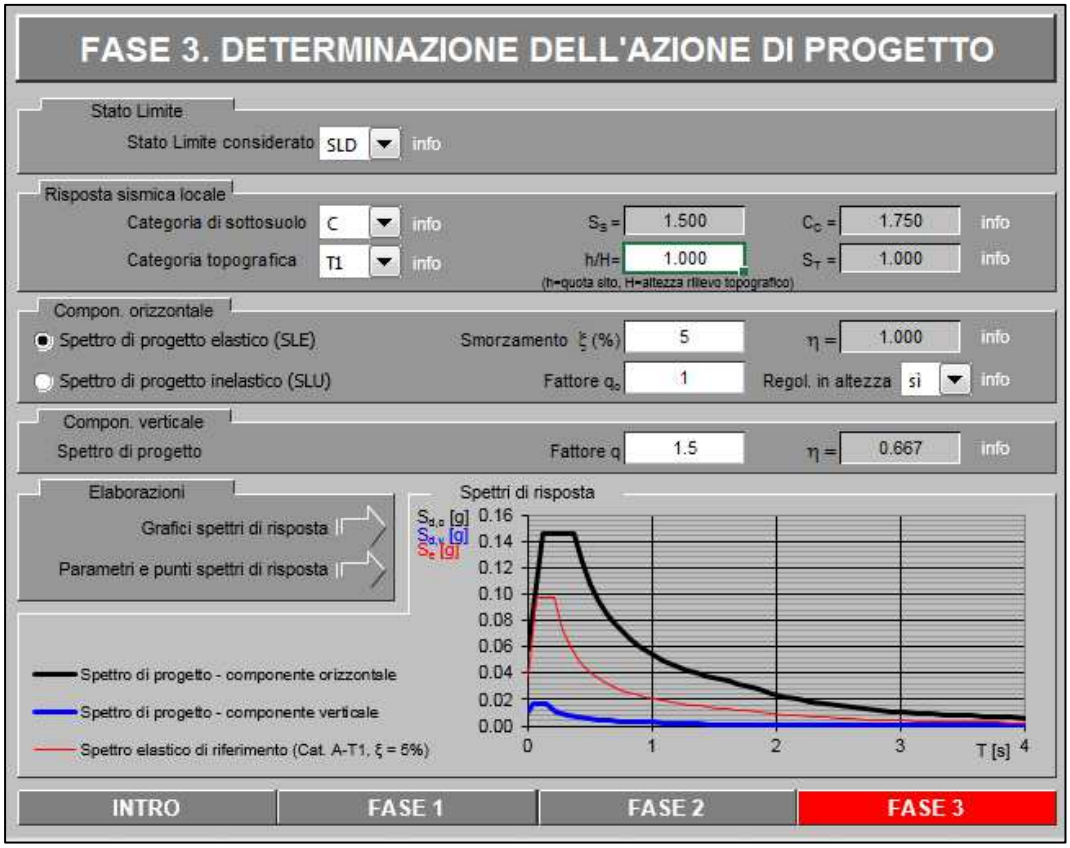

STATO LIMITE DI SALVAGUARDIA DELLE VITA UTILE (SLV)

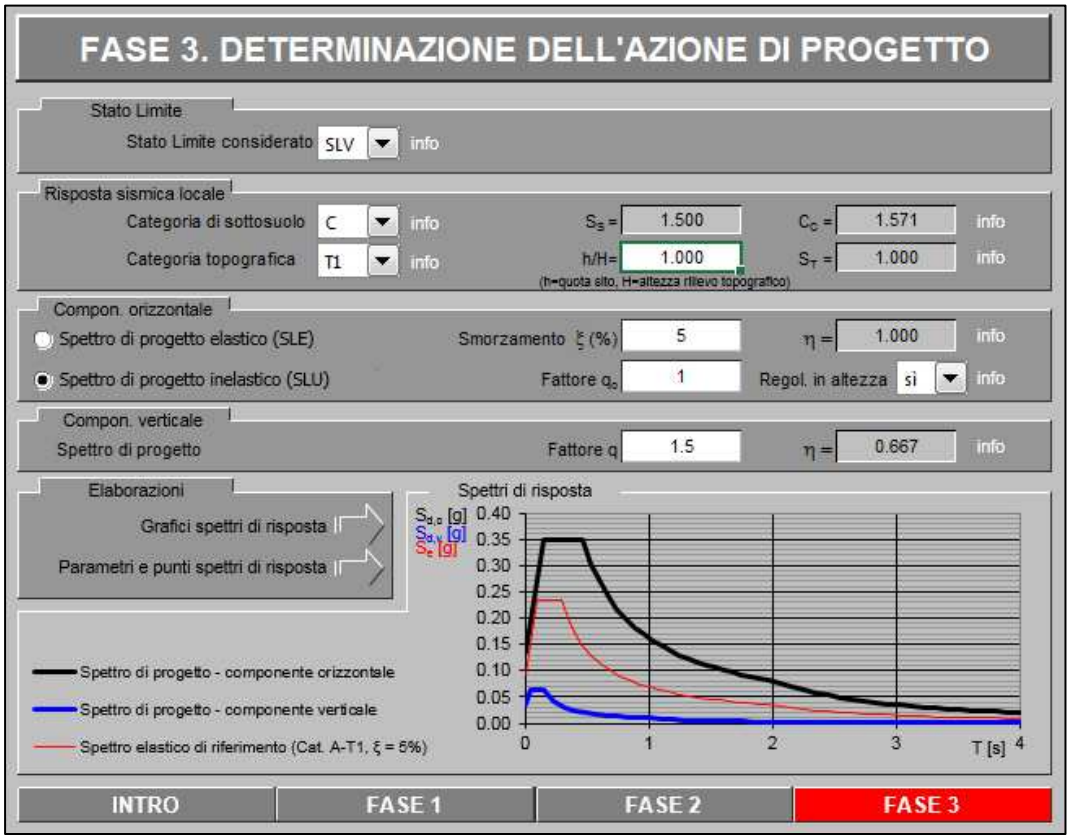

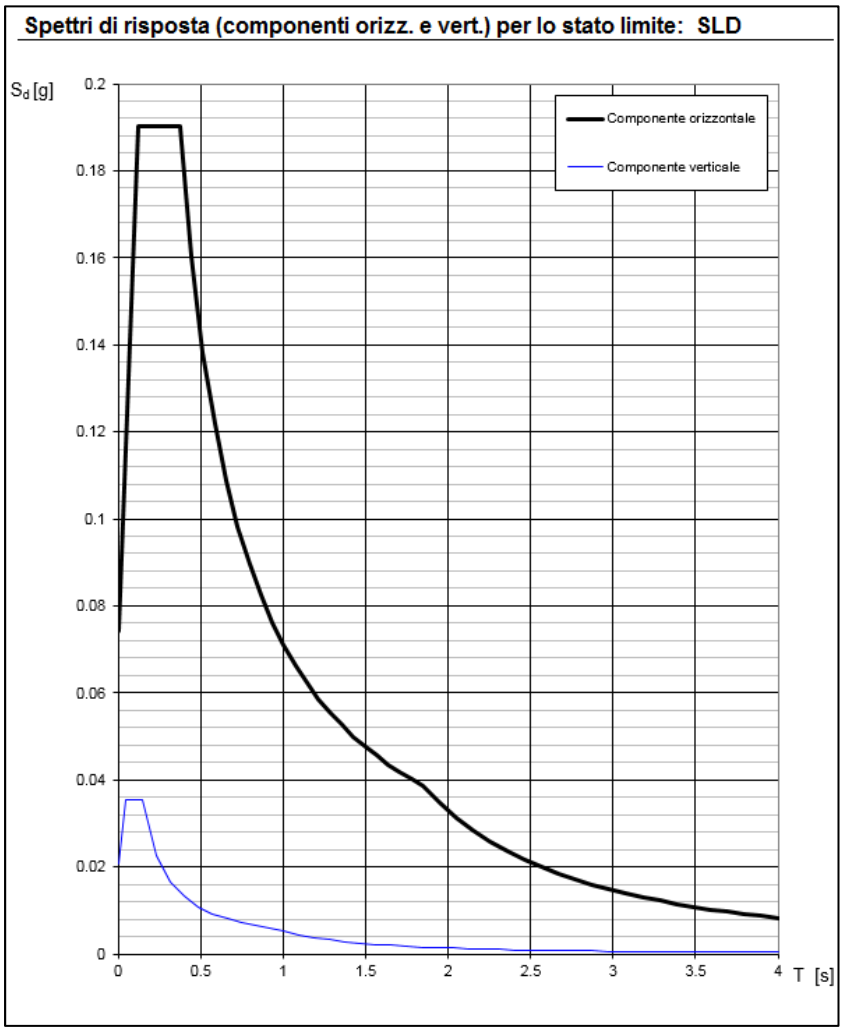

Parametri e punti dello spettro di risposta orizzontale per SLD	Parametri e punti dello spettro di risposta verticale per lo SLD

Parametri indipendenti

STATO LIMITE	SLD
a_g	0.038 g
F_o	2.545
T_C^*	0.213 s
S_S	1.500
C_C	1.750
S_T	1.000
q	1.000

Parametri dipendenti

S	1.500
η	1.000
T_B	0.124 s
T_C	0.372 s
T_D	1.753 s

Parametri indipendenti

STATO LIMITE	SLD
a_{gv}	0.010 g
S_S	1.000
S_T	1.000
q	1.500
T_B	0.050 s
T_C	0.150 s
T_D	1.000 s

Parametri dipendenti

F_v	0.672
S	1.000
η	0.667

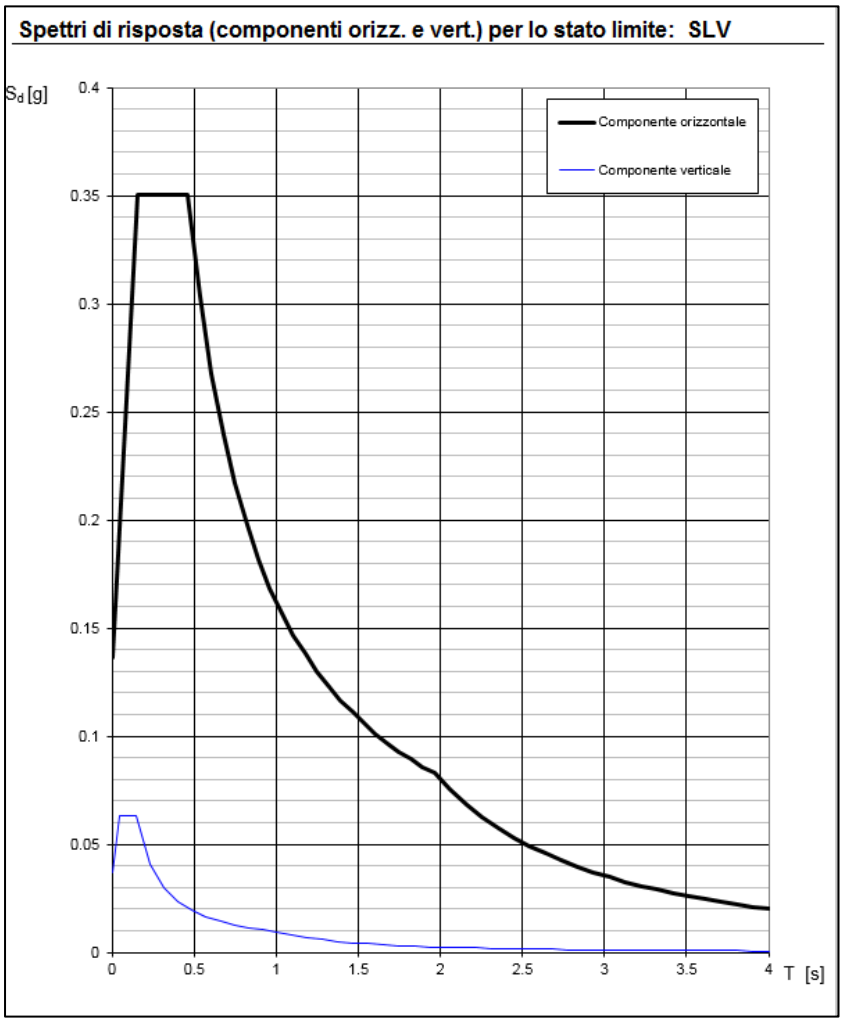

Parametri e punti dello spettro di risposta orizzontale per SLV	Parametri e punti dello spettro di risposta verticale per lo SLV

Parametri indipendenti

STATO LIMITE	SLV
a_g	0.091 g
F_o	2.572
T_C^*	0.295 s
S_S	1.500
C_C	1.571
S_T	1.000
q	1.000

Parametri dipendenti

S	1.500
η	1.000
T_B	0.155 s
T_C	0.464 s
T_D	1.963 s

Parametri indipendenti

STATO LIMITE	SLV
a_{gv}	0.037 g
S_S	1.000
S_T	1.000
q	1.500
T_B	0.050 s
T_C	0.150 s
T_D	1.000 s

Parametri dipendenti

F_v	1.046
S	1.000
η	0.667

Si possono, quindi, riepilogare i valori dell'**accelerazione sismica di progetto**, ovvero della **pericolosità sismica di progetto**:

- accelerazione sismica orizzontale di riferimento a SLD: a_g = 0,038 g.
- accelerazione sismica orizzontale di riferimento a **SLV: a_g = 0,091 g**.
- accelerazione sismica orizzontale massima di progetto a SLV (***pericolosità sismica di progetto a SLV***): **$a_{g,SLV} = S_s \times S_T \times a_{g,SLV}$ = 1,5 x 1,0 x 0,091 g ≅ 0,137 g.**

5.5 Combinazioni di carico

Ai fini delle verifiche degli stati limite si definiscono le seguenti combinazioni delle azioni (ai sensi del *D.M. 17/01/2018, paragrafo 2.5.3*):

- Combinazione fondamentale, per gli stati limite ultimi (SLU):

$$SD = \gamma_{G1} G_1 + \gamma_{G2} G_2 + \gamma_P P + \gamma_{Q1} Q_{k1} + \gamma_{Q2} \Psi_{02} Q_{k2} + \gamma_{Q3} \Psi_{03} Q_{k3} + \ldots$$

- Combinazione caratteristica (rara), generalmente impiegata per gli stati limite di esercizio (SLE) irreversibili, da utilizzarsi nelle verifiche alle tensioni ammissibili:

$$SD = G_1 + G_2 + P + Q_{k1} + \Psi_{02} Q_{k2} + \Psi_{03} Q_{k3} + \ldots$$

- Combinazione frequente, generalmente impiegata per gli stati limite di esercizio (SLE) reversibili:

$$SD = G_1 + G_2 + P + \Psi_{11} Q_{k1} + \Psi_{22} Q_{k2} + \Psi_{23} Q_{k3} + \ldots$$

- Combinazione quasi permanente (SLE), generalmente impiegata per gli effetti a lungo termine:

$$SD = G_1 + G_2 + P + \Psi_{21} Q_{k1} + \Psi_{22} Q_{k2} + \Psi_{23} Q_{k3} + \ldots$$

- Combinazione sismica, impiegata per gli stati limite ultimi e di esercizio connessi all'azione sismica E:

$$SD = E + G_1 + G_2 + P + \Psi_{21} Q_{k1} + \Psi_{22} Q_{k2} + \ldots$$

Nelle combinazioni per SLE, si intende che vengono omessi i carichi Q_{kj} che danno un contributo favorevole ai fini delle verifiche e, se del caso, i carichi G2.

I coefficienti parziali per le azioni utilizzati nelle verifiche a SLU sono, in genere:

Categoria/Azione variabile	ψ_{0j}	ψ_{1j}	ψ_{2j}
Categoria A Ambienti ad uso residenziale	0,7	0,5	0,3
Categoria B Uffici	0,7	0,5	0,3
Categoria C Ambienti suscettibili di affollamento	0,7	0,7	0,6
Categoria D Ambienti ad uso commerciale	0,7	0,7	0,6
Categoria E Biblioteche, archivi, magazzini e ambienti ad uso industriale	1,0	0,9	0,8
Categoria F Rimesse e parcheggi (per autoveicoli di peso ≤ 30 kN)	0,7	0,7	0,6
Categoria G Rimesse e parcheggi (per autoveicoli di peso > 30 kN)	0,7	0,5	0,3
Categoria H Coperture	0,0	0,0	0,0
Vento	0,6	0,2	0,0
Neve (a quota ≤ 1000 m s.l.m.)	0,5	0,2	0,0
Neve (a quota > 1000 m s.l.m.)	0,7	0,5	0,2
Variazioni termiche	0,6	0,5	0,0

Il valore dei coefficienti di combinazione usati sono, invece, i seguenti:

Tab. 2.6.I – *Coefficienti parziali per le azioni o per l'effetto delle azioni nelle verifiche SLU*

		Coefficiente γ_F	EQU	A1	A2
Carichi permanenti G_1	Favorevoli	γ_{G1}	0,9	1,0	1,0
	Sfavorevoli		1,1	1,3	1,0
Carichi permanenti non strutturali G_2[(1)]	Favorevoli	γ_{G2}	0,8	0,8	0,8
	Sfavorevoli		1,5	1,5	1,3
Azioni variabili Q	Favorevoli	γ_{Qi}	0,0	0,0	0,0
	Sfavorevoli		1,5	1,5	1,3

(1) Nel caso in cui l'intensità dei carichi permanenti non strutturali o di una parte di essi (ad es. carichi permanenti portati) sia ben definita in fase di progetto, per detti carichi o per la parte di essi nota si potranno adottare gli stessi coefficienti parziali validi per le azioni permanenti.

I valori dei coefficienti di combinazione per la categoria I (coperture praticabili) e per la categoria K (copertura per usi speciali) saranno da valutarsi caso per caso.

Relativamente all'azione sismica AE, da prendersi in conto in un'apposita situazione di progetto sismica (combinazione sismica), essa è stata schematizzata applicando, non contemporaneamente, in due direzioni ortogonali un sistema di forze orizzontali sismiche di intensità proporzionale alle masse della costruzione.

Si considerano, in particolare, le masse associate ai seguenti carichi gravitazionali:

$$G_k + P_k + \sum(\Psi_2 Q_k)$$

dove:

Ψ_2 coefficiente di combinazione dell' azione variabile Q_k, che tiene conto della ridotta probabilità che tutti i carichi variabili siano presenti sull'intera struttura in occasione del sisma. In particolare nella "*combinazione sismica*" potrà essere considerata esclusivamente l'azione

variabile prevalente, ovvero dominante, associata al sovraccarico agente ed applicando il pertinente coefficiente di combinazione previsto dalla *tabella 2.5.I o 5.1.VI* delle N.T.C.-2018, ampiamente ragionevole e giustificato per via della ridottissima probabilità di evento sismico in concomitanza al sovraccarico variabile massimo.

Si evidenzia che per la determinazione degli effetti dell'azione sismica, in relazione a quanto previsto dal *paragrafo 5.1.3.12 delle N.T.C.-2018*, si è fatto riferimento alle sole masse corrispondenti ai pesi propri ed ai sovraccarichi permanenti, considerando nullo il valore quasi permanente delle masse corrispondenti ai sovraccarichi accidentali.

6. Metodi di analisi e criteri di verifica strutturale

6.1 Costruzioni in conglomerato cementizio armato

La valutazione della sicurezza delle strutture in progetto in calcestruzzo armato è stata condotta secondo i principi fondamentali ed i metodi indicati al *capitolo 2* del D.M. 17.01.2018. In particolare, l'analisi strutturale volta alla valutazione degli effetti delle azioni, è stata condotta mediante il metodo di **analisi elastica lineare** ai sensi del *paragrafo 4.1.1.1 delle N.T.C.-2018*, con lo scopo di stabilire la distribuzione delle forze interne, delle tensioni, delle deformazioni e degli spostamenti nelle strutture. Per la determinazione degli effetti delle azioni, le analisi saranno, quindi, effettuate assumendo:

- sezioni interamente reagenti con rigidezze valutate riferendosi al solo calcestruzzo;
- relazioni tensione deformazione lineari;
- valori medi del modulo d'elasticità.

Ai fini della valutazione della resistenza ultima delle sezioni di elementi monodimensionali nei confronti di sforzo normale e flessione, si adotteranno, inoltre, le seguenti ipotesi:

- conservazione delle sezioni piane;
- perfetta aderenza tra acciaio e calcestruzzo;
- rottura del calcestruzzo determinata dal raggiungimento della sua capacità de formativa ultima a compressione;
- rottura dell'armatura tesa determinata dal raggiungimento della sua capacità de formativa ultima.

L'analisi delle strutture nei confronti delle azioni sismiche è stata invece condotta, relativamente ai manufatti principali e caratterizzati da una maggiore rilevanza costruttiva, mediante il metodo di **analisi dinamica lineare** ai sensi del *paragrafo 7.3.3.1 delle N.T.C.-2018* e consistente:

- nella determinazione dei modi di vibrare della costruzione (analisi modale);
- nel calcolo degli effetti dell'azione sismica, rappresentata dallo spettro di risposta di progetto, per ciascuno dei modi di vibrare individuati;
- nella combinazione di questi effetti.

L'analisi strutturale sismica dei manufatti costruttivamente più semplici è stata, invece, condotta mediante il metodo di **analisi statica lineare** ai sensi del *paragrafo 7.3.3.2 delle N.T.C.-2018*.

Relativamente ai **metodi di calcolo**, come già indicato in precedenza, si farà riferimento al metodo degli stati limite, secondo quanto previsto dal D.M. 17.01.2018. Le suddette norme saranno applicate integralmente anche per quanto riguarda i materiali e i prodotti, le azioni e il collaudo statico. Ai fini delle verifiche strutturali dovrà risultare sempre soddisfatta la seguente relazione:

Rd (Resistenza di progetto) > Ed (Effetto delle azioni di progetto)

dove R_d è la resistenza di progetto, valutata in base ai valori di progetto della resistenza dei materiali e ai valori nominali delle grandezze geometriche interessate ed E_d è il valore di progetto dell'effetto delle azioni, valutato in base ai valori di progetto delle azioni e ai coefficienti di combinazione come indicato nel *§ 2.5.3 delle N.T.C.*.

6.1.1 Resistenze di calcolo

In generale, le resistenze di calcolo f_d dei materiali, calcestruzzo ed acciaio, sono ottenute mediante l'espressione:

$$f_d = \frac{f_k}{\gamma_M}$$

dove:

- f_k è la resistenza caratteristica del materiale considerato;
- γ_M è il coefficiente parziale per le resistenza, comprensivo delle incertezze del modello e della geometria, che può variare in funzione del materiale, della situazione di progetto e della particolare verifica in esame.

I valori specifici dei parametri caratteristici dei materiali per uso struttuale sono stati, pertanto, dedotti dalle formule indicate al *paragrafo 4.1.2.1.1* del citato D.M. che vengono riportate di seguito:

- **resistenza di calcolo a compressione del calcestruzzo:**

$$f_{cd} = \alpha_{cc} \frac{f_{ck}}{\gamma_C}$$

dove:

α_{cc} è il coefficiente riduttivo per le resistenze di lunga durata ed è pari a 0,85;

γ_C è il coefficiente parziale di sicurezza relativo al calcestruzzo ed è pari a 1,5;

f_{ck} è la resistenza caratteristica cilindrica a compressione del calcestruzzo a 28 giorni.

- **resistenza di calcolo a trazione del calcestruzzo:**

$$f_{ctd} = \frac{f_{ctk}}{\gamma_C}$$

dove:

γ_C è il coefficiente parziale di sicurezza relativo al calcestruzzo ed è pari a 1,5;

f_{ctk} è la resistenza caratteristica a trazione del calcestruzzo e vale:

$$f_{ctk} = 0.7 \cdot f_{ctm}$$

dove:

f_{ctm} è la resistenza media a trazione semplice del calcestruzzo e vale:

$$f_{ctm} = 0.3 \cdot f_{ck}^{2/3}$$

dove:

f_{ck} è la resistenza caratteristica cilindrica a compressione del calcestruzzo a 28 giorni.

- **resistenza di calcolo dell'acciaio:**

$$f_{yd} = \frac{f_{yk}}{\gamma_S}$$

dove:

γ_S è il coefficiente parziale di sicurezza relativo al'acciaio ed è pari a 1,15;

f_{yk} è la tensione caratteristica di snervamento dell'acciaio.

Con riferimento, quindi, alle caratteristiche tecniche – prestazionali indicate al *capitolo 3*, si sono, in definitiva assunti i seguenti valori principali di resistenza di calcolo:

Calcestruzzo C25/30 – R_{ck} 30 N/mm^2:

$$f_{cd} = \alpha_{cc} \cdot \frac{f_{ck}}{y_c} = 0{,}85 \cdot \frac{R'_{ck} \cdot 0{,}83}{y_c} = 0{,}85 \cdot \frac{25{,}0}{1{,}5} \cong 14{,}17 \text{ N/mm}^2$$

$$f_{ctd} = \frac{f_{ctk}}{y_c} = \frac{0{,}7 \cdot \left(0{,}3 \cdot f_{ck}^{2/3}\right)}{y_c} = 1{,}20 \text{ N/mm}^2$$

Acciaio per c.a. B450C controllato in stabilimento:

$$f_{yd} = \frac{f_{yk}}{y_s} = \frac{450}{1{,}15} = 391 \text{ N/mm}^2$$

Le tensioni nel calcestruzzo e nell'armatura si dedurranno, a partire dalle deformazioni, utilizzando i rispettivi diagrammi tensione-deformazione.

I diagrammi costitutivi del calcestruzzo sono stati adottati in conformità alle indicazioni riportate al *paragrafo 4.1.2.1.2.1 del D.M. 17 gennaio 2018*; in particolare sia per le verifiche effettuate a pressoflessione retta che per le verifiche degli elementi a pressoflessione deviata è stato adottato il modello "*parabola-rettangolo*" indicato dal diagramma (a) riportato nella figura sottostante:

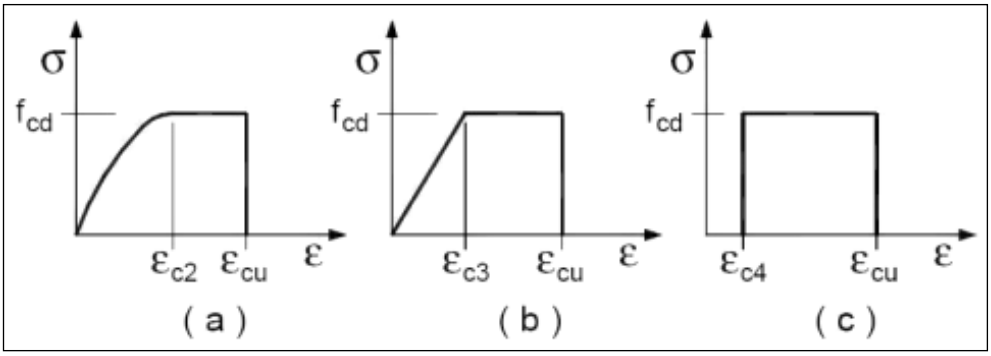

Figura 4 - Modelli di calcolo tensione-deformazione per il calcestruzzo.

Per le classi di resistenza del calcetruzzo pari o inferiori a C50/60 si può porre:

- ε_{c2} = 2.0‰;
- ε_{cu} = 3.5‰.

Per il diagramma tensione-deformazione dell'acciaio è possibile adottare opportuni modelli rappresentativi del reale comportamento del materiale in conformità alle indicazioni riportate al *punto 4.1.2.1.2.2 del D.M. 17 gennaio 2018*; in particolare è stato, quindi, adottato il modello elastico perfettamente plastico indefinito nel seguito rappresentato (diagramma *(b)*):

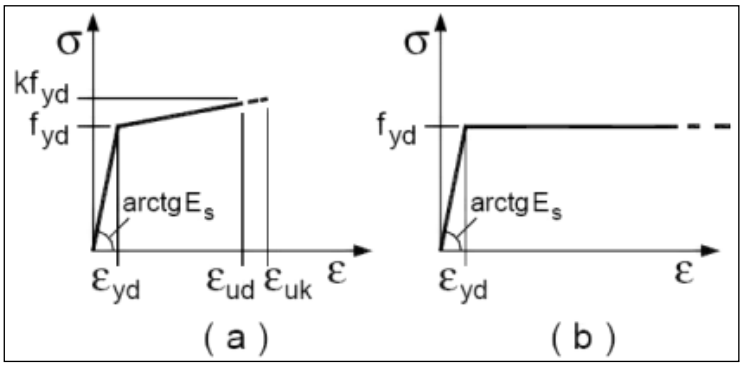

Figura 5 - Modelli di calcolo σ-ε per l'acciaio.

<u>Tutti i materiali impiegati dovranno essere, comunque, verificati con opportune prove di laboratorio secondo le prescrizioni della vigente Normativa (*capitolo 11 del D.M. 17.01.2018*) e in base a quanto già indicato al *capitolo 3* della presente relazione.</u>

6.1.2 Verifiche agli Stati Limite Ultimi (SLU)

6.1.2.1 Dimensionamento armature longitudinali (verifica flessione)

Allo Stato Limite Ultimo i momenti flettenti sollecitanti di progetto MEd sono calcolati con i metodi dell'analisi strutturale per i carichi della combinazione fondamentale:

$$\gamma_{G1}\, G_1 + \gamma_{G2}\, G_2 + \gamma_P\, P + \gamma_{Q1}\, Q_{k1} + \gamma_{Q2}\, \Psi_{02}\, Q_{k2} + \gamma_{Q3}\, \Psi_{03}\, Q_{k3} + \ldots$$

Una sezione inflessa da un momento di progetto di SLU M_{Ed} è verificata se è soddisfatta la relazione:

$$M_{Ed} \leq M_{Rd}$$

Per il calcolo dello stato tensionale sono valide le tre ipotesi esposte precedentemente:

Il metodo definisce "*configurazioni deformate di SLU*" di una sezione solo quelle configurazioni in cui almeno uno dei materiali acciaio e calcestruzzo raggiunge la deformazione ultima del proprio diagramma di progetto. Solo tali configurazioni sono convenzionalmente definite "*di stato limite ultimo*".

In flessione le configurazioni deformate di una sezione di interesse allo SLU sono, dunque, tutte e solo quelle in cui la deformazione del calcestruzzo al bordo compresso è pari alla deformazione ultima $|\varepsilon_c| = |\varepsilon_{cu2}|$ mentre la deformazione ε_s dell'acciaio è compresa tra la deformazione nulla $\varepsilon_s = 0$ e la deformazione ultima ε_{ud}. Per le sezioni inflesse sono $N_{Ed} = 0$ e $M_{Ed} \neq 0$. Perché risulti $N_{Ed} = 0$ deve essere (vedi *figura 6*):

$$C + S' = S \qquad\qquad \beta_1\, f_{cd}\, x_u\, b + \sigma'_s\, A'_s = \sigma_s\, A_s$$

L'asse neutro "taglia" la sezione alla profondità x_u, tale valore permette il calcolo della risultante C delle tensioni del calcestruzzo compresso.

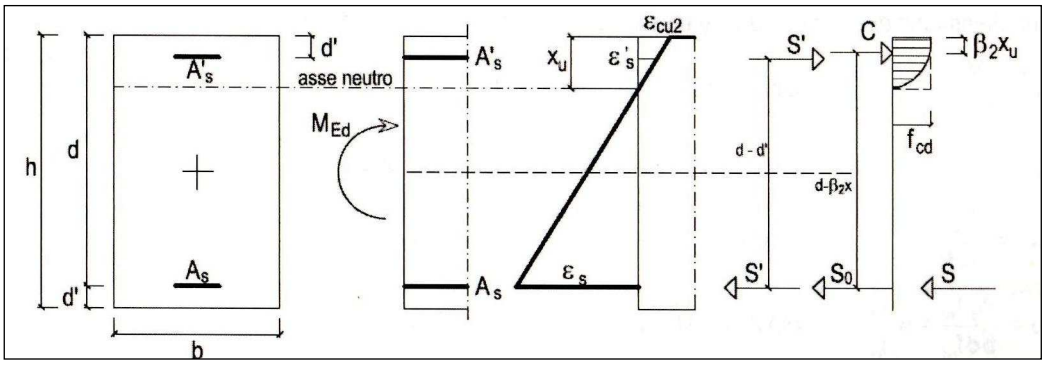

Figura 6.

Il momento resistente di SLU M_{Rd} è somma di due coppie, una coppia calcestruzzo-acciaio C – S_0 formata dalla risultante C del calcestruzzo compresso e S_0 di parte dell'armatura tesa il cui braccio di leva è $z = (d-\beta_2\, x_u)$, e una coppia S' – S formata dalle risultanti S' dell'armatura

compressa e della parte restante dell'armatura tesa, con braccio di leva (d-d') (vedi *figura 6*):

$M_{Rd} = C\ z + S'\ (d-d')$ $\qquad$ $M_{Rd} = \beta_1\ f_{cd}\ x_u\ b\ (d-\beta_2\ x_u) + \sigma'_s\ A_s' = \sigma'_s\ A_s'\ (d-d')$

Avendo come dati le caratteristiche dei materiali acciaio – calcestruzzo e le dimensioni geometriche b, d della sezione considerata, le incognite di progetto sono tre: la larghezza della zona compressa e le aree d'armatura A_s' e A_s. Se si fissa un rapporto A_s'/As le due equazioni sopra riportate (una di equilibrio alla traslazione e una di equilibrio alla rotazione) permettono di determinare la larghezza della zona compressa e l'area A_s dell'armatura tesa.
Dal progetto si ottengono quantità teoriche che sono successivamente arrotondate per eccesso. Tale arrotondamento garantisce che la capacità portante M_{Rd} della sezione sia maggiore di quella minima teorica: progetto e verifica costituiscono dunque di fatto un'unica fase.

6.1.2.2 Dimensionamento armature trasversali (verifica taglio)

Le armature trasversali in grado di portare una forza di taglio V sono quelle che, inclinate da 45° a 90° sull'asse longitudinale di un elemento, attraversano l'asse neutro collegando il corrente inferiore teso con il corrente superiore compresso. Tali armature, per essere efficaci, devono essere debitamente ancorate in entrambi i correnti.

Negli elementi privi di armatura trasversale sotto l'effetto dei carichi nascono fessure sub verticali, oltre che nella zona prevalentemente inflessa, anche nella zona di flessione/taglio. In assenza di armature trasversali per il trasferimento della forza di taglio si ipotizza un meccanismo resistente arco-tirante in cui l'arco è costituito dal calcestruzzo compresso e il tirante dalle armature inferiori tese ancorate alle estremità (*figura 7*).

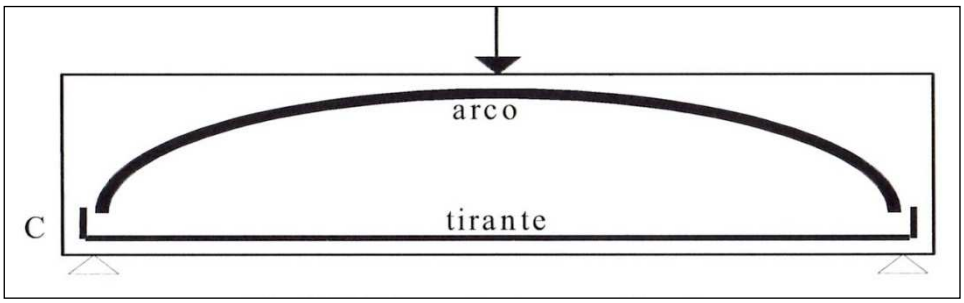

Figura 7.

Perché il meccanismo arco-tirante sia efficace alle estremità della trave deve essere presente un'adeguate quantità d'armatura al bordo inferiore della sezione. Ipotizzando che il corrente compresso incida nel nodo di estremità con un angolo di 45°, per l'equilibrio nasce nel corrente teso una forza di trazione di intensità pari alla forza di taglio V.

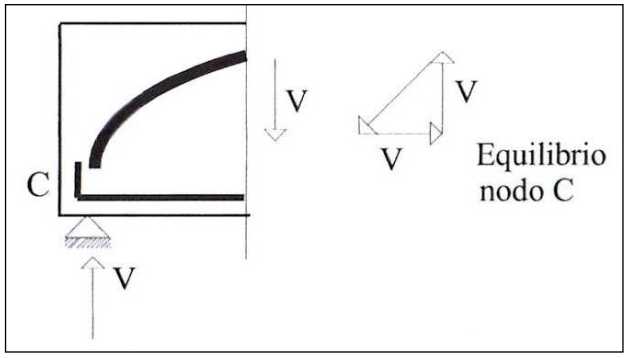

Figura 8.

La capacità portante V_{Rd} di un elemento non armato a taglio vale (secondo *D.M. 17.01.2018, paragrafo. 4.1.2.3.5.1*):

$$V_{Rd} = \left\{ 0{,}18 \cdot k \cdot \frac{(100 \cdot \rho_1 \cdot f_{ck})^{\frac{1}{3}}}{\gamma_c} + 0{,}15 \cdot \sigma_{cp} \right\} \cdot b_w \cdot d \geq \left(v_{min} 0{,}15 \cdot \sigma_{cp} \right) \cdot b_w \cdot d$$

Per cui deve essere rispettata la seguente disuguaglianza:

$$V_{Ed} \leq V_{Rd}$$

In presenza di significativi sforzi di trazione, la resistenza a taglio del calcestruzzo è da considerarsi nulla e, in tal caso, non è possibile adottare elementi sprovvisti di armatura trasversale.

Per elementi dotati di armatura trasversale (staffe, barre piegate,…) il D.M. 17.01.2018 e l'EC2 schematizzano la trave con una sovrapposizione di reticoli isostatici costituiti ciascuno da bielle di calcestruzzo compresse inclinate dell'angolo θ, bielle tese formate dalle armature trasversali disposte con un angolo α compreso tra 45° e 90° rispetto alla linea d'asse della trave, corrente superiore compresso e corrente inferiore teso (*modello di Morsch – figura 9*).

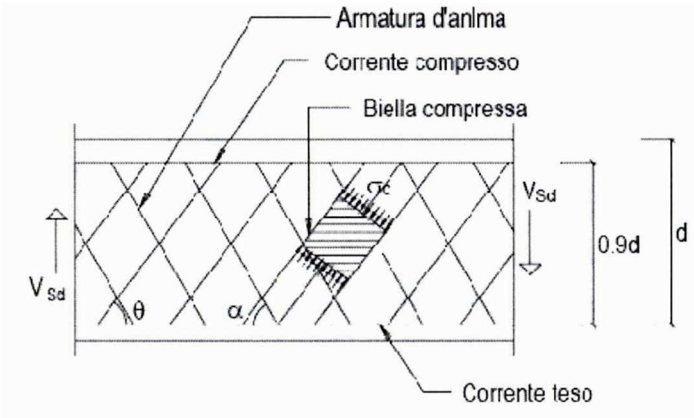

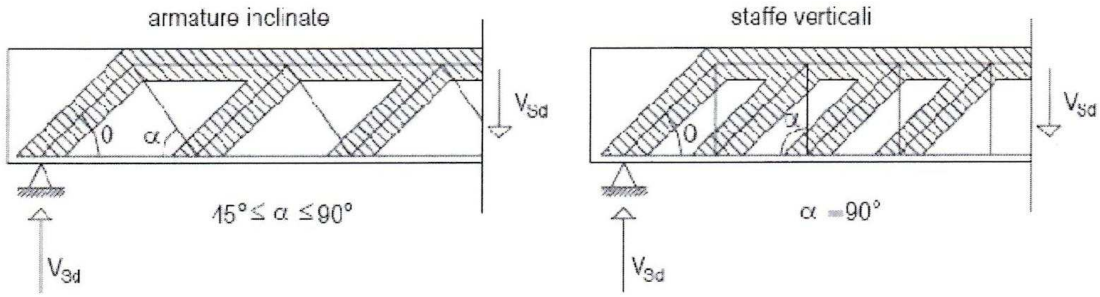

Figura 9.

Le sollecitazioni nelle bielle del reticolo isostatico si calcolano con semblici equazioni d'equilibrio alla traslazione.

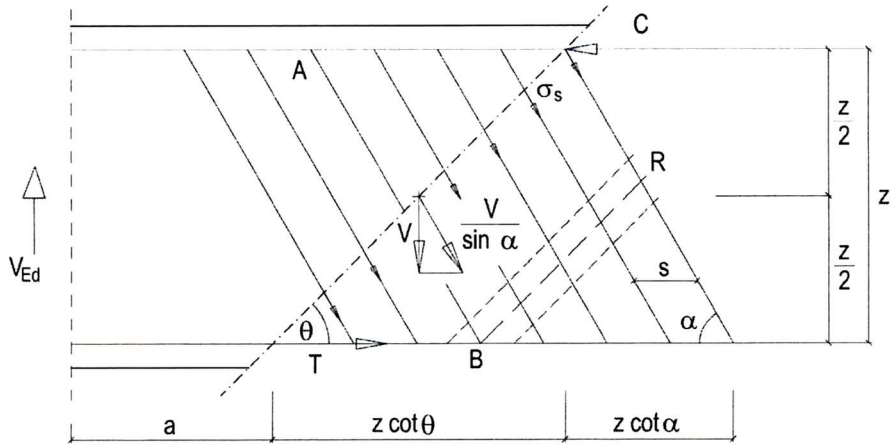

Figura 10.

In base al paragrafo *4.1.2.3.5.2 del D.M. 17.01.2018*, l'inclinazione θ dei puntoni di calcestruzzo rispetto all'asse della trave deve rispettare i limiti seguenti:

$$1 \leq \text{ctg}\ \theta \leq 2{,}5$$

La verifica di resistenza (SLU) si pone con:

$$V_{Ed} \leq V_{Rd}$$

dove V_{Ed} è il valore di calcolo dello sforzo di taglio allo SLU agente.

Con riferimento all'armatura trasversale**,** la resistenza di calcolo a "taglio trazione" si calcola con:

$$V_{Rsd} = 0{,}9 \cdot d \cdot \frac{A_{sw}}{s} \cdot f_{yd} \cdot (ctg\alpha + ctg\theta) \cdot sin\alpha$$

Con riferimento al calcestruzzo d'anima, la resistenza di calcolo a "taglio compressione" si calcola con:

$$V_{Rsd} = 0{,}9 \cdot d \cdot b_w \cdot \alpha_c \cdot f'_{cd} \cdot (ctg\alpha + ctg\theta)/(1 + ctg^2\theta)$$

La resistenza al taglio della trave è la minore delle due sopra definite:

$$V_{Rd} = \min(V_{Rsd}, V_{Rcd})$$

Le verifiche che devono essere soddisfatte in questo caso sono:

1) $V_{Ed} \leq V_{Rdc}$ per la verifica a compressione del calcestruzzo d'anima;
2) $V_{Ed} \leq V_{Rds}$ per la verifica a trazione delle armature trasversali;
3) $V_{Rds} \leq V_{Rdc}$ per la verifica delle condizioni di duttilità.

6.1.2.3 Verifica a punzonamento

In accordo al paragrafo *4.1.2.3.5.4 delle N.T.C.-2018* solette piene, solette nervate a sezione piena in corrispondenza di colonne, e fondazioni devono essere verificate nei riguardi del punzonamento allo stato limite ultimo, in corrispondenza di pilastri e di carichi concentrati.

Se, sulla base del calcolo, la resistenza a trazione del calcestruzzo sul perimetro efficace non è sufficiente per fornre la richiesta resistenza al punzonamento, vanno inserite apposite armature a taglio aggiuntive. Queste armature vanno estese fino al perimetro più esterno sul quale la resistenza a trazione del calcestruzzo risulta sufficiente. Per la valutazione della resistenza a punzonamento si può fare utile riferimento al *paragrafo 6.4.4 UNI EN1992-1-1* nel caso di assenza di armature a taglio, al *paragrafo 6.4.5* della norma *UNI EN1992-1-1* nel caso di presenza di armature a taglio.

6.1.3 Verifiche agli Stati Limite di Esercizio (SLE)

Anche se il progetto delle sezioni e delle armature di un elemento inflesso si effettua, di regola, per le sollecitazioni di stato limite ultimo (SLU), la verifica degli stati limite d'esercizio (SLE) può in molti casi limitare le scelte progettuali. Per evitare che una struttura progettata allo SLU non verifichi gli SLE è opportuno tener conto di questi ultimi nel definire i criteri di dimensionamento allo SLU della geometria degli elementi strutturali.

Gli stati limiti d'esercizio di cui tratta il D.M. 17.01.2018 riguardano quelle condizioni d'uso di una struttura che possono avere un risvolto diretto sulla frubilità, ma non comportano pregiudizio per l'incolumità delle persone.

Valgono le seguenti considerazioni:

1) per la minor severità delle conseguenze legate al superamento di uno stato limite di esercizio i coefficienti di sicurezza parziali delle azioni hanno valore $\gamma_F = 1{,}0$ minore che allo stato limite ultimo. Analogamente per le resistenze si assume $\gamma_M = 1{,}0$. il calcolo dunque si basa sui valori "*caratteristici*" di azioni e resistenze. Per alcune

grandezze meccaniche (modulo E, coefficiente di ritiro, ecc.) si adottano, anziché i valori caratteristici, i valori medi.

2) Per strutture non precompresse per la verifica di **limitazione delle tensioni** si utilizzano due combinazioni: la *combinazione di carico quasi permanente QP* e la *combinazione di carico caratteristica (rara) CA*. Per lo stato **limite di fessurazione** si utilizza, invece, la *combinazione di carico quasi permanente QP*.
3) Per i diversi stati limite di esercizio i valori da non superare sono fissati nella norma di riferimento (D.M. 17.01.2018) o nei capitolati, se legati alle condizioni d'uso di una particolare opera.
4) Per il calcolo degli effetti dei carichi (fessure, deformazioni, tensioni, ecc.) oggetto degli SLE si possono utilizzare modelli basati sul comportamento elastico lineare dei materiali. Per il calcestruzzo armato si può utilizzare il modello della sezione omogeneizzata parzializzata.

6.1.3.1 Verifica di fessurazione

La presenza di fessure nelle strutture inflesse di calcestruzzo armato non precompresso è inevitabile tanto che è alla base dei modelli di calcolo delle strutture in c.a. (sezioni parzializzate). Ciò nonostante l'ampiezza delle fessure deve risultare limitata, oltre che per ragioni estetiche, soprattutto per non ridurre la protezione delle armature all'aggressività ambientale.

Il valore limite di apertura della fessura calcolato al livello considerato è pari ad uno dei seguenti valori nominali:

- w_1 = 0,2 mm;
- w_2 = 0,3 mm;
- w_3 = 0,4 mm.

Lo stato limite di fessurazione deve essere fissato in funzione delle condizioni ambientali e della sensibilità delle armature alla corrosione, come descritto nel seguito.
Le condizioni ambientali, ai fini della protezione contro la corrosione delle armature metalliche, possono essere suddivise in ordinarie, aggressive e molto aggressive in relazione a quanto indicato nella *Tab. 4.1.III del D.M. 17.01.2018* con riferimento alle classi di esposizione definite nelle *Linee Guida per il calcestruzzo strutturale emesse dal Servizio Tecnico Centrale del Consiglio Superiore dei Lavori Pubblici* – aggiornato settembre 2017.

Tabella 4.1.III – *Descrizione delle condizioni ambientali*

CONDIZIONI AMBIENTALI	CLASSE DI ESPOSIZIONE
Ordinarie	X0, XC1, XC2, XC3, XF1
Aggressive	XC4, XD1, XS1, XA1, XA2, XF2, XF3
Molto aggressive	XD2, XD3, XS2, XS3, XA3, XF4

Le armature si distinguono in due gruppi:

- armature sensibili, alle quali appartengono gli acciai da precompressione;
- armature poco sensibili, relative agli gli acciai ordinari.

Per gli acciai zincati e per quelli inossidabili si può tener conto della loro minor sensibilità alla corrosione.

Nella *Tab. 4.1.IV del D.M. 17.01.2018* sono indicati i criteri di scelta dello stato limite di fessurazione con riferimento alle esigenze sopra riportate.

Tabella 4.1.IV – *Criteri di scelta dello stato limite di fessurazione*

Gruppi di esigenze	Condizioni ambientali	Combinazione di azioni	Armatura			
			Sensibile		Poco sensibile	
			Stato limite	w_d	Stato limite	w_d
a	Ordinarie	frequente	ap. fessure	$\leq w_2$	ap. fessure	$\leq w_3$
		quasi permanente	ap. fessure	$\leq w_1$	ap. fessure	$\leq w_2$
b	Aggressive	frequente	ap. fessure	$\leq w_1$	ap. fessure	$\leq w_2$
		quasi permanente	decompressione	-	ap. fessure	$\leq w_1$
c	Molto aggressive	frequente	formazione fessure	-	ap. fessure	$\leq w_1$
		quasi permanente	decompressione	-	ap. fessure	$\leq w_1$

Il valore di calcolo dell'apertura delle fessure w_d, da confrontare con i valori limite indicati nella tabella precedente, è ottenuto applicando la procedura proposta nel *paragrafo C4.1.2.2.4.5 del 21 gennaio 2019, n. 617 e s.m.i. (circolare applicativa N.T.C.-2018).*

Per le opere in progetto, caratterizzate da armature poco sensibili e da condizioni ambientali ordinarie verrà, quindi, cautelativamente sviluppata una verifica alla fessurazione, per la condizione "quasi permanente", con riferimento al limite "w_2", in modo tale da tenere prudenzialmente in conto i possibili effetti dovuti ai ripetuti cicli di gelo e disgelo all'azione dell'acqua, oltre che a possibili difetti esecutivi e riduzioni di copriferro localizzate.

6.1.3.2 Verifica delle tensioni di esercizio

La verifica delle tensioni in esercizio è effettuata nelle usuali ipotesi di comportamento lineare dei materiali, trascurando la resistenza a trazione del calcestruzzo teso. Valutate le azioni interne nelle varie parti della struttura, dovute alle combinazioni caratteristica e quasi permanente delle azioni, si calcolano le massime tensioni sia nel calcestruzzo sia nelle armature; si verifica che tali tensioni siano inferiori ai massimi valori consentiti indicati nel *paragrafo.*

4.1.2.2.5. del D.M. 17.01.2018.

La massima tensione di compressione del calcestruzzo σ_c, deve, in particolare, rispettare la limitazione seguente:

$\sigma_c < 0{,}60\ f_{ck}$ per combinazione di carico caratteristica (rara);

$\sigma_c < 0{,}45\ f_{ck}$ per combinazione di carico quasi permanente.

La massima tensione di trazione per l'acciaio dell'armatura tesa σ_s, deve, invece, rispettare la limitazione seguente:

$$\sigma_s < 0{,}80\ f_{yk}$$

Nei calcoli per azioni di breve durata può assumersi il valore del modulo di elasticità del calcestruzzo E_c dato dall'*equazione 11.2.5 delle N.T.C. – D.M. 17.01.2018*, ed un modulo di elasticità dell'acciaio E_s pari a 210.000 N/mm^2. Tale valore può essere opportunamente ridotto nel caso di fili, trecce e trefoli da cemento armato precompresso.

Nel caso di azioni di lunga durata, gli effetti della viscosità del calcestruzzo si possono tenere in conto riducendo opportunamente il modulo di elasticità E_c mediante l'introduzione del coefficiente di viscosità ϕ definito al *paragrafo 11.2.10.7 delle N.T.C.* in funzione del grado di umidità relativa ambientale.

6.2 Costruzioni in legno per uso strutturale

La valutazione della sicurezza e la verifica delle strutture in legno previste in progetto sarà condotta secondo i principi fondamentali e i metodi indicati ai *capitoli 2, 4.4 e 7.7 del D.M. 17.01.2018*. In particolare le verifica di sicurezza delle strutture in legno saranno attuate in relazione sia agli stati limite ultimi che agli stati limite di esercizio e con riferimento, oltre che alle condizioni iniziali, anche alle condizioni finali (a tempo infinito). Si rimanda, in particolare, a quanto espressamente specificato ai *paragrafi 4.4.7 e 4.4.8* delle N.T.C.-2018.

L'analisi delle strutture sarà effettuata assumendo un comportamento elastico lineare dei materiali, considerando i valori pertinenti (medi o caratteristici) del modulo elastico, in funzione dello stato limite e del tipo di verifica considerati.

I calcoli verranno svolti usando appropriate schematizzazioni adottando schemi di calcolo semplificati ma idonei per simulare con ragionevole precisione il comportamento strutturale della costruzione, anche in relazione alle modalità costruttive previste.

6.2.1 Resistenze di calcolo

La durata del carico e l'umidità del legno influiscono sulle proprietà resistenti del legno. I valori di calcolo per le proprietà del materiale a partire dai valori caratteristici si assegnano, quindi, con riferimento combinato alle classi di durata del carico e alle classi di servizio come definite ai *paragrafi 4.4.4 e 4.4.5* delle N.T.C.-2018. In particolare, il valore di calcolo X_d di una proprietà del materiale (o della resistenza di un collegamento) viene calcolato mediante la relazione:

$$X_d = \frac{k_{\text{mod}} X_k}{\gamma_M}$$

dove:

- X_k è il valore caratteristico della proprietà del materiale, come specificato al § 11.7 delle N.T.C.-2018, o della resistenza del collegamento. Il valore caratteristico X_k può anche essere determinato mediante prove sperimentali sulla base di prove svolte in condizioni definite dalle norme europee applicabili;
- γ_M è il coefficiente parziale di sicurezza relativo al materiale, i cui valori sono riportati nella tabella 4.4.III del D.M. 17.01.2018; per il legno lamellare è assunto pari a 1,45;
- k_{mod} è un coefficiente correttivo che tiene conto dell'effetto, sui parametri di resistenza, sia della durata del carico sia dell'umidità della struttura. I valori di k_{mod} sono forniti nella tabella 4.4.IV del D.M. 17.01.2018. Se una combinazione di carico comprende azioni appartenenti a differenti classi di durata del carico si dovrà scegliere un valore di k_{mod} che corrisponde all'azione di minor durata.

6.2.2 Verifiche agli Stati Limite Ultimi (SLU)

Le verifiche a stato limite ultimo saranno condotte con specifico riferimento a quanto previsto dal *paragrafo 4.4.8* del D.M. 17.01.2018. Le tensioni interne sono state calcolate nell'ipotesi di conservazione delle sezioni piane e di una relazione lineare tra tensioni e deformazioni fino alla rottura.

Le **verifiche a flessione**, in particolare, faranno riferimento ad entrambe le seguenti condizioni:

$$\frac{\sigma_{m,y,d}}{f_{m,y,d}} + k_m \frac{\sigma_{m,z,d}}{f_{m,z,d}} \leq 1 \qquad k_m \frac{\sigma_{m,y,d}}{f_{m,y,d}} + \frac{\sigma_{m,z,d}}{f_{m,z,d}} \leq 1$$

dove:

– $\sigma_{m,y,d}$ e $\sigma_{m,z,d}$ sono le tensioni di calcolo massime per flessione rispettivamente nei piani xz e xy determinate assumendo una distribuzione elastico lineare delle tensioni sulla sezione (vedi *figura 11*);
– $f_{m,y,d}$ e $f_{m,z,d}$ sono le corrispondenti resistenze di calcolo a flessione, determinate tenendo conto anche delle dimensioni della sezione trasversale mediante il coefficiente k_h, come definito al *paragrafo 11.7.1.1* delle N.T.C.-2018.

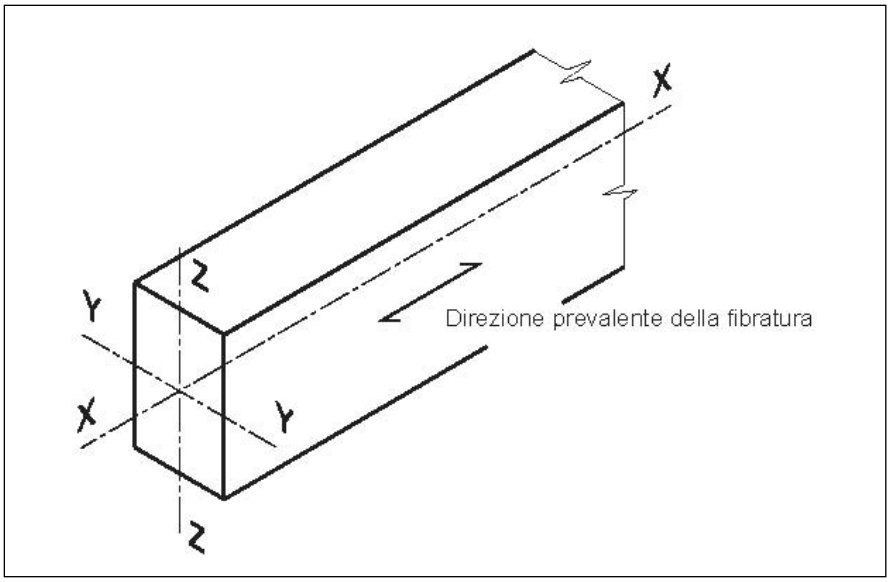

Figura 11 – Assi di riferimento dell'elemento in legno.

I valori da adottare per il coefficiente k_m, che tiene conto convenzionalmente della ridistribuzione delle tensioni e della disomogeneità del materiale nella sezione trasversale, sono:

- k_m = 0,7 per sezioni trasversali rettangolari;
- k_m = 1,0 per altre sezioni trasversali.

Deve essere, inoltre, effettuata la verifica di instabilità allo svergolamento (flesso-torsionale) per gli elementi inflessi, come definita al § 4.4.8.2.1 delle N.T.C.-2018.

Per le **verifiche a taglio** deve essere soddisfatta la condizione:

$$\tau_d \leq f_{v,d}$$

dove:

– τ_d è la tensione massima tangenziale di calcolo, valutata secondo la teoria di Jourawski;
– $f_{v,d}$ è la corrispondente resistenza di calcolo a taglio.

Relativamente ai puntoni verranno, inoltre, svolte le opportune verifiche a **compressione** e a **instabilità per compressione** con le modalità previste dalle NTC-2018.

Relativamente alle travi principali, ove necessario, sarà eventualmente ed aggiuntivamente eseguita anche la verifica dell'appoggio.

Considerata, infine, la semplicità e la regolarità delle strutture in progetto, allo stato attuale, si può ritenere ammissibile non eseguire specifiche verifiche a torsione ed instabilità a trazione delle varie travi. Non sono, peraltro, presenti sforzi di tenso-flessione o presso-flessione significativi.

6.2.3 Verifiche agli Stati Limite di Esercizio (SLE)

Le deformazioni di una struttura, dovute agli effetti delle azioni applicate, degli stati di coazione, delle variazioni di umidità e degli scorrimenti nelle unioni, devono essere contenute entro limiti accettabili, sia in relazione ai danni che possono essere indotti ai materiali di rivestimento, ai pavimenti, alle tramezzature e, più in generale, alle finiture, sia in relazione ai requisiti estetici ed alla funzionalità dell'opera.

Considerando il particolare comportamento reologico del legno e dei materiali derivati dal legno, si devono valutare sia la deformazione istantanea sia la deformazione a lungo termine.

La deformazione istantanea si calcola usando i valori medi dei moduli elastici per le membrature e il valore istantaneo del modulo di scorrimento dei collegamenti.

La deformazione a lungo termine può essere calcolata utilizzando i valori medi dei moduli elastici ridotti opportunamente mediante il fattore $1/(1+ k_{def})$, per le membrature, e utilizzando un valore ridotto nello stesso modo del modulo di scorrimento dei collegamenti.

Il coefficiente k_{def} tiene conto dell'aumento di deformabilità con il tempo causato dall'effetto combinato della viscosità e dell'umidità del materiale. I valori di k_{def} sono riportati nella tabella 4.4.V delle N.T.C.-2018.

6.3 Modelli di calcolo e di verifica strutturale

La modellazione e il calcolo finalizzato al dimensionamento e alle verifiche strutturali e geotecniche nonché la valutazione della sicurezza globale dell'edificio filtri e controllo irriguo, sono stati effettuati tramite il codice di calcolo numerico agli elementi finiti *Midas Gen 2019/2020, numero di serie: USGWOOO515, distribuito da Harpaceas S.r.l. di Milano.*

Il modello assunto per l'analisi strutturale è costituito da elementi a piastra (plate) e a trave (beam) opportunamente suddivisi in mesh di calcolo con altezze delle sezioni pari a quelle di progetto. Al modello sono state, quindi, applicate le azioni e i carichi e sovraccarichi per come definiti nella presente relazione e le condizioni al contorno di vincolo in fondazione come definite al *paragrafo 7.2* della presente relazione. Il software ripartisce e calibra in automatico la costante di sottofondo stimata alle dimensioni e alla geometria degli elementi di calcolo e dei relativi nodi elaborando, quindi, le azioni applicate sulla struttura e determinando le sollecitazioni di calcolo secondo le combinazioni di carico previste da normativa.

La copertura in legno dell'edificio tecnico di controllo è stata, invece, calcolata e verificata mediante fogli di calcolo semplificati in accordo alle N.T.C..

I risultati delle sollecitazioni di calcolo desumibili dall'elaborazione del modello ad elementi finiti sono stati opportunamente verificati tramite modelli di valutazione semplificati con riferimento sia allo stato limite ultimo che agli stati limite di esercizio sia a scopo di riscontro numerico che al fine della **validazione** e della verifica di **attendibilità dei risultati** stessi secondo quanto previsto dalle N.T.C..

I restanti manufatti in progetto sono stati, invece, modellati e verificati tramite codici di calcolo semplificati sempre conformemente alle N.T.C.-2018. In tal senso le analisi e i calcoli di verifica delle **costruzioni caratterizzate da una minore rilevanza strutturale**, da un limitato sviluppo dimensionale e geometricamente simmetriche, sono stati effettuati, ove possibile, con l'ausilio di modelli numerici semplificati, considerando cautelativamente i vari manufatti ed opere di tipo geotecnico con schema resistente a sezione verticale ad "U" o ad "L", alla stregua di pareti incastrate in fondazione, riconducendoli, pertanto, ad uno schema statico di tipo "a mensola".

7. Metodi di calcolo e criteri di verifica geotecnica

Le verifiche di progetto sono state condotte seguendo i criteri dell'ingegneria geotecnica, in particolare secondo il "*metodo dei coefficienti di sicurezza parziali*" applicato all'ingegneria geotecnica come introdotto al *paragrafo 6.2.4 del D.M. 17.01.2018*, "*Aggiornamento delle Norme Tecniche per le Costruzioni" e dall'Eurocodice 7, "Progettazione Geotecnica" – UNI EN 1997-1*.

Le verifiche geotecniche sono state, inoltre, condotte seguendo i metodi e i criteri previsti dai *paragrafi 6.2, 6.3, 6.4, 6.5 delle N.T.C.-2018*, seguendo l'Approccio 1 e/o l'Approccio 2, prevedendo combinazioni differenti dei gruppi di coefficienti parziali per le azioni (A1, A2), per i parametri geotecnici e la resistenza dei materiali (M1, M2) e per la resistenza globale del sistema (R1, R2, R3), da adottare in funzione del tipo di opera e delle tipologie di verifiche per essa richieste. Per quanto riguarda la progettazione nei confronti delle azioni sismiche verrà, infine, fatto riferimento a quanto previsto dal *paragrafo 7.11 delle N.T.C.-2018*.

Per quanto riguarda la vita nominale delle opere e la classe d'uso delle stesse (*paragrafo 2.4 delle N.T.C.-2018*) in considerazione della tipologia di intervento e la destinazione d'uso delle strutture si assume una vita nominale V_N pari a 50 anni ed una classe d'uso II, così come indicato al *paragrafo 5.1* della presente relazione.

7.1 Criteri progettuali e di verifica

L' *O.P.C.M. n. 3274 del 08.05.2003* e le successive *Norme Tecniche per le costruzioni del 17.01.2018* hanno introdotto un nuovo criterio di verifica, basato sugli stati limite, in analogia con quanto già previsto dagli Eurocodici.

Le verifiche a rottura vengono effettuate allo Stato Limite Ultimo (SLU) sia in fase statica che in fase sismica, rispettando la condizione

$$Ed \leq Rd \qquad (1)$$

dove:

- Ed è il valore di progetto dell'effetto delle azioni agenti;
- Rd è la corrispondente resistenza di progetto, che associa tutte le proprietà dei materiali e delle sezioni resistenti con i rispettivi valori di progetto.

Le verifiche sono, pertanto, state eseguite con il "*metodo dei coefficienti parziali*" previsto dalle N.T.C.-2018 da applicare alle azioni esterne che agiscono nel modello e alle proprietà dei terreni interessati.

Le caratteristiche geotecniche dei terreni, valutate attraverso opportune indagini geotecniche, sono definite "*valori caratteristici*".

Coefficienti sulle Azioni

γ_G sulle azioni permanenti (sfavorevoli o favorevoli): $G_d = \gamma_G \cdot G$

γ_Q sulle azioni variabili (sfavorevoli o favorevoli): $Q_d = \gamma_G \cdot Q$

Coefficienti parziali sui Parametri dei Terreni

- γ_γ sul peso di volume: $\gamma_d = \dfrac{\gamma}{\gamma_\gamma}$
- γ_φ sull'angolo d'attrito (sulla tangente dell'angolo di attrito): $tg\varphi_d = \dfrac{tg\varphi}{\gamma_\varphi}$
- γ_c sulla coesione efficace: $c'_d = \dfrac{c'}{\gamma_{c'}}$
- γ_{cu} sulla coesione non drenata: $\gamma_{cu} = \dfrac{c_u}{\gamma_{cu}}$

Coefficienti parziali per le Resistenze

$R_d = \dfrac{R_k}{\gamma_R}$ variabili a seconda del tipo di fondazione o sistema geotecnico.

Nel D.M. 17.01.2018 vengono indicati i seguenti coefficienti parziali di calcolo:

	Effetto	Coefficiente Parziale γ_F (o γ_E)	EQU	(A1)	(A2)
Carichi permanenti G_1	Favorevole	γ_{G1}	0,9	1,0	1,0
	Sfavorevole		1,1	1,3	1,0
Carichi permanenti G_2 (1)	Favorevole	γ_{G2}	0,8	0,8	0,8
	Sfavorevole		1,5	1,5	1,3
Azioni variabili Q	Favorevole	γ_{Qi}	0,0	0,0	0,0
	Sfavorevole		1,5	1,5	1,3

(1) Per i carichi permanenti G_2 si applica quanto indicato alla Tabella 2.6.I. Per la spinta delle terre si fa riferimento ai coefficienti γ_{G1}

Tabella 7 – Coefficienti parziali per le azioni (A).

PARAMETRO	GRANDEZZA ALLA QUALE APPLICARE IL COEFFICIENTE PARZIALE	COEFFICIENTE PARZIALE γ_M	(M1)	(M2)
Tangente dell'angolo di resistenza al taglio	$\tan \varphi'_k$	$\gamma_{\varphi'}$	1,0	1,25
Coesione efficace	c'_k	$\gamma_{c'}$	1,0	1,25
Resistenza non drenata	c_{uk}	γ_{cu}	1,0	1,4
Peso dell'unità di volume	γ	γ_γ	1,0	1,0

Tabella 8 – Coefficienti parziali per i parametri geotecnici del terreno (M).

Il valore di progetto R_d della resistenza si ottiene, infine, a partire dal valore caratteristico R_k applicando i coefficienti parziali γ_R delle tabelle seguenti, variabili in funzione del tipo di opera in esame:

Verifica	Coefficiente parziale (R3)
Carico limite	$\gamma_R = 2,3$
Scorrimento	$\gamma_R = 1,1$

Tabella 9.1 – Coefficienti parziali delle resistenze (R) per fondazioni.

Verifica	Coefficiente parziale (R3)
Capacità portante della fondazione	$\gamma_R = 1,4$
Scorrimento	$\gamma_R = 1,1$
Ribaltamento	$\gamma_R = 1,15$
Resistenza del terreno a valle	$\gamma_R = 1,4$

Tabella 9.2 – Coefficienti parziali delle resistenze (R) per i muri di sostegno.

Coefficiente	**R2**
γ_R	1.1

Tabella 9.3 – Coefficienti parziali delle resistenze (R) per opere in materiali sciolti e fronti scavo.

Le verifiche allo **Stato Limite Ultimo** devono, pertanto, essere effettuate sia nei confronti degli aspetti geotecnici (*SLU di tipo geotecnico – GEO*) sia di quelli strutturali (*SLU di tipo strutturale – STR*) tenendo conto in linea generale dei valori dei coefficienti parziali riportati nelle tabelle 7, 8, 9 (9.1 / 9.2 / 9.3), seguendo uno dei due seguenti approcci progettuali:

Approccio 1:

- Combinazione 1: (A1+M1+R1);
- Combinazione 2: (A2+M2+R2).

Approccio 2:

- Combinazione (A1+M1+R3).

Opere di fondazione di tipo diretto

Per quanto riguarda le **fondazioni di tipo diretto**, le Norme Tecniche per le costruzioni del 17.01.2018 impongono, in particolare, di verificare che esse siano verificate almeno nei confronti dei seguenti stati limite:

SLU di tipo geotecnico (GEO):

- collasso per carico limite dell'insieme fondazione-terreno;
- collasso per scorrimento sul piano di posa;
- stabilità globale;

SLU di tipo strutturale (STR):

- raggiungimento della resistenza degli elementi strutturali,

accertando che la condizione *(1)* sia soddisfatta per ogni stato limite considerato.

La verifica a stabilità globale deve essere effettuata secondo l'Approccio 1 con la Combinazione 2 (A2+M2+R2), tenendo conto dei coefficienti parziali riportati nelle *tabelle 7 e 8* per le azioni e i parametri geotecnici e nella *tabella 9.3* per le resistenze globali.

Le rimanenti verifiche devono essere effettuate, tenendo sempre conto dei valori dei coefficienti parziali riportati nelle tabelle suddette e seguendo la combinazione (A1+M1+R3) prevista dall'Approccio 2. Nelle verifiche effettuate con l'Approccio 2 che siano finalizzate al dimensionamento strutturale, il coefficiente γ_R non deve essere portato in conto.

Le verifiche agli stati limite ultimi in condizioni sismiche devono essere effettuate ponendo pari all'unità i coefficienti parziali sulle azioni e impiegando i parametri geotecnici e le resistenze di progetto, con i valori dei coefficienti parziali indicati nelle *tabelle 7 e 8, e* imponendo un coefficiente γ_R come previsti dalla *tabella 7.11.II* del *paragrafo 7.11.5.3.1 delle N.T.C.-2018.*

Pareti e muri controterra

In base a quanto previsto dal *paragrafo 6.5.3.1.1. del D.M. 17.01.2018*, per le strutture in elevazione progettualmente previste (pareti controterra in c.a. relative a canali e manufatti di contenimento liquidi) si è provveduto ad eseguire le verifiche con riferimento ai seguenti stati limite:

- *SLU di tipo geotecnico (GEO):*
  - stabilità globale del complesso opera di sostegno-terreno;

- scorrimento sul piano di posa;
- collasso per carico limite dell'insieme fondazione-terreno;
- ribaltamento;

▪ *SLU di tipo strutturale (STR):*

- raggiungimento della resistenza negli elementi strutturali,

accertando sempre che la condizione Ed ≤ Rd *(1)* sia soddisfatta per ogni stato limite considerato.

Si evidenzia che relativamente ai pozzetti e ai manufatti a sezione scatolare non sono state effettuate verifiche specifiche a scorrimento e a ribaltamento, oltre che a stabilità globale, in quanto non assimilabili a vere e proprie opere di sostegno, bensì a manufatti interrati confinati da ambo i lati, per i quali, tali tipi di verifiche non assumono significato fisico.

Le verifiche di stabilità globale, sempre in riferimento al *paragrafo 6.5.3.1.1. del D.M. 17.01.2018* saranno effettuate secondo l'Approccio 1 con la Combinazione 2:

− Combinazione 1: (A1+M1+R1);

− Combinazione 2: (A2+M2+R2).

tenendo conto dei coefficienti parziali riportati nelle *tabelle 7, 8 e 9.3.*

Le rimanenti verifiche devono essere effettuate secondo l'Approccio 2, con la Combinazione (A1, M1, R3), tenendo conto dei coefficienti parziali riportati nelle *tabelle 7, 8 e 9.2.*

In generale, le ipotesi di calcolo delle spinte devono essere giustificate sulla base dei prevedibili spostamenti relativi manufatto-terreno, ovvero determinate con un'analisi dell'interazione terreno-struttura. Le spinte terranno in conto, ove potenzialmente presente, del sovraccarico e dell'inclinazione del piano campagna, dell'inclinazione del paramento rispetto alla verticale, delle pressioni interstiziali e degli effetti della filtrazione nel terreno.

Fronti scavo e verifiche di stabilità

Con riferimento alle condizioni statiche le verifiche devono essere condotte secondo l'Approccio 1, con la Combinazione 2 (A2+M2+R2) e, in relazione al *capitolo 6.8,* tenendo conto dei valori dei coefficienti parziali riportati nelle *tabelle 7, 8 e 9.3.*

La verifica di stabilità sarà, pertanto, superata se il rapporto tra le forze resistenti e le forze agenti (γ_R) risulterà superiore a 1.1.

Il progetto tiene in conto dell'esistenza di opere e sovraccarichi in prossimità degli scavi, esaminandone l'influenza sul regime delle acque superficiali, garantendo la stabilità e la funzionalità delle costruzioni preesistenti nell'area interessata dai lavori.

Per scavi in trincea a fronte verticale di altezza superiore ai 2 m, nei quali sia prevista la permanenza di operai, e per scavi che ricadano in prossimità di manufatti esistenti, deve essere, in generale, prevista un'opportuna armatura di sostegno provvisoria delle pareti di scavo oppure un'adeguata sagomatura del fronte scavo con pendenza tale da rispettare i coefficienti di sicurezza previsti dalle norme tecniche vigenti.

Le verifiche devono essere svolte nei confronti degli stati limite ultimi (SLU) e nei confronti degli stati limite di servizio (SLE), quando pertinenti. Le azioni dovute al terreno, all'acqua e ai sovraccarichi, anche transitori (per esempio dovuti ai mezzi di cantiere) devono essere calcolate in modo da pervenire, di volta in volta, alle condizioni più sfavorevoli tra quelle corrispondenti alle diverse fasi costruttive, al termine della costruzione e all'esercizio dell'opera.

Nelle verifiche di sicurezza nei confronti delle azioni sismiche possono essere effettuate ponendo pari all'unità i coefficienti parziali sulle azioni e sui parametri geotecnici *(§ 7.11.1 N.T.C.-2018*) e impiegando le resistenze di progetto calcolate con un coefficiente parziale pari a $\gamma_R = 1.2$.

Si deve, inoltre, tener conto della presenza di manufatti interagenti con l'opera.

Le opere con valenza geotecnica in progetto, ove pertinente e ritenuto necessario vanno inoltre, verificate anche nei confronti degli stati limite di esercizio, con riferimento a quanto previsto dal *paragrafo 6.2.4.3 del D.M. 17.01.2018.* A tale scopo, il progetto deve esplicitare le prescrizioni relative agli spostamenti (cedimenti) compatibili e le prestazioni attese per le opere stesse, in relazione all'importanza e all'uso a cui sono destinate.

Per ciascun stato limite di esercizio deve essere, quindi, rispettata la condizione:

$$E_d \leq C_d \qquad (2)$$

dove E_d è il valore di progetto dell'effetto delle azioni e C_d è il prescritto valore limite dell'effetto delle azioni, stabilito in funzione del comportamento della struttura in elevazione.

Verifiche di tipo idraulico a galleggiamento e sifonamento

Per la stabilità al sollevamento deve risultare che il valore di progetto dell'azione instabilizzante $V_{inst,d}$, combinazione di azioni permanenti ($G_{inst,d}$) e variabili ($Q_{inst,d}$), sia non maggiore della combinazione dei valori di progetto delle azioni stabilizzanti ($G_{stb,d}$) e delle resistenze (R_d):

$$V_{inst,d} \leq G_{stb,d} + R_d \qquad \text{dove: } V_{inst,d} = G_{inst,d} + Q_{inst,d}$$

Per le verifiche di stabilità al sollevamento, i relativi coefficienti parziali sulle azioni sono indicati nella *Tab. 6.2.III delle N.T.C.-2018*. Tali coefficienti devono essere combinati in modo opportuno con quelli relativi ai parametri geotecnici (M2).

	Effetto	Coefficiente Parziale γ_F (o γ_E)	Sollevamento (UPL)
Carichi permanenti G_1	Favorevole	γ_{G1}	0,9
	Sfavorevole		1,1
Carichi permanenti G_2(1)	Favorevole	γ_{G2}	0,8
	Sfavorevole		1,5
Azioni variabili Q	Favorevole	γ_{Qi}	0,0
	Sfavorevole		1,5

Tabella 10 – Coefficienti parziali delle azioni (A) per le verifiche idrauliche.

Considerata la tipologia di opere caratterizzate da manufatti interrati e confinati da ambo i lati, la litologia del terreno in sito nonché la limitata interferenza della falda rispetto al piano di imposta delle fondazioni in progetto, si è ritenuto congruo non svolgere particolari verifiche in esercizio riguardanti gli *stati limite ultimi di tipo idraulico (sifonamento e sollevamento)* di cui al *paragrafo 6.2.4.2 del D.M. 17.01.2018*, in quanto caratterizzati da scarsa valenza e sussistenza fisica in rapporto alla quota relativa di falda. Può essere, pertanto, ritenuta ragionevolmente giustificata l'omissione di tali tipi di verifiche.

7.2 Iterazione e modellazione terreno – fondazioni

Le costruzioni previste in progetto sono costituite da fondazioni di tipo diretto assimilabili alla tipologia "a platea", in grado di distribuire ottimamente ed in maniera uniforme le sollecitazioni trasmesse dalle azioni di calcolo. L'iterazione tra dette strutture di fondazione e il terreno assunta ai fini di calcolo è stata, quindi, rappresentata mediante una schematizzazione su suolo elastico alla Winkler (1867). Sono stati, quindi, utilizzati dei vincoli elastici costituiti da molle traslazionali, reagenti linearmente ed aventi un modulo di reazione verticale k_w variabile in funzione sia della forma e delle dimensioni delle fondazioni che del loro piano di posa (approfondimento) rispetto al piano di riferimento nonché dall'entità dei carichi applicati. Il modulo di reazione orizzontale, per simulare anche l'effetto dell'attrito alla base tra terreno e fondazione, con la conseguente notevole riduzione degli spostamenti in direzione x e y, rispetto a quelli in direzione z, è stato convenzionalmente assunto di un ordine di grandezza superiore rispetto a quello verticale, ovvero pari a circa 3 volte rispetto a

quest'ultimo.

Il modello di Winkler, con notevole semplificazione e al solo fine del calcolo delle sollecitazioni sugli elementi strutturali, caratterizza, quindi, il sottosuolo attraverso una relazione lineare tra il cedimento di un punto dell'interfaccia terreno-fondazione, e la pressione $\sigma_T(x)$ agente nello stesso punto:

$$\sigma_T(x) = k_w \cdot \delta(x)$$

dove k_w [F/L³] è detta "***costante di sottofondo***" o "coefficiente di reazione verticale del terreno" ed è valutabile in funzione del tipo di terreno e $\delta(x)$ è la funzione abbassamento, ovvero cedimento, della fondazione di calcolo. In tal senso la tensione massima trasmessa dalla platea di fondazione sul terreno si ottiene direttamente dall'analisi strutturale moltiplicando l'abbassamento o cedimento massimo di calcolo per la costante di sottofondo k_w di Winkler assunta. Tale valore è direttamente confrontabile con quello di capacità portante della fondazione desunto dalla relazione geotecnica di progetto e calcolato secondo la teoria di *Terzaghi e il metodo di Brinch – Hansen*, per la condizione di stato limite assunta.

La stima del modulo di reazione verticale del terreno da inserire nel modello numerico è stata effettuata utilizzando la formula proposta da Bowles (1974) e calcolando l'ipotetico cedimento a tempo infinito (a lungo termine o totale) delle diverse fondazioni in progetto nei confronti dei carichi statici agenti.

$$k_w = 40 \cdot Q_a \cdot FS \cdot (2{,}54 / \delta) = 40 \cdot Q_{ult} \cdot (2{,}54 / \delta)$$

dove:

- Q_a è la pressione ammissibile di esercizio sul terreno, pari a Q_{ult} / FS;
- Q_{ult} è la pressione ultima del terreno corrispondente ad un cedimento di un pollice;
- 40 è un coefficiente sperimentale introdotto da Bowles corrispondente valevole per il suddetto cedimento limite di un pollice (2,54 cm);
- FS è il fattore di sicurezza (safety factor), assunto pari a 3;
- δ è il cedimento di calcolo.

La tabella seguente riporta, quindi, per ciascuna tipologia omogenea di opera in progetto, i relativi valori della costante di sottofondo stimati secondo le modalità sopra descritte e assunti nei calcoli, comprensivi di un coefficiente di sicurezza pari a 3,0:

Manufatti e opere in progetto	Stima costante di sottofondo [kN/m^3]
Edificio filtri e controllo irriguo	≅ 10000
Manufatti e pozzetti minori	≅ 20000

Tabella 11 – Costante di sottofondo applicata per la modellazione del terreno delle principali tipologie omogenee di costruzioni in progetto.

7.3 Stima dei cedimenti

Per quanto riguarda la **stima dei cedimenti a lungo termine** considerata la profondità media di imposta delle fondazioni dei principali manufatti in progetto, si potrà fare riferimento al metodo di *Burland and Burbidge (1985),* valido per terreni incoerenti sulla scorta dei risultati desunti dalle prove penetrometriche dinamiche (N_{spt}) effettuate e in funzione delle dimensioni delle fondazioni e del loro approfondimento medio:

$$\delta = \sigma'_{v0} \cdot B^{0,7} \cdot \frac{I_c}{3} + \left(q' - \sigma'_{v0}\right) \cdot B^{0,7} \cdot I_c \quad [mm]$$

dove:

- δ è il cedimento di calcolo, a lungo termine;
- I_c è l'indice di compressibilità, correlato al valore N delle prove penetometriche dinamiche e pari a: 1,7 / $N^{1,4}$; a tal proposito si evidenzia che il valore di N_{spt} assunto per la stima di tale indice, è stato di volta in volta riferito alla profondità di posa delle fondazioni dei manufatti principali in progetto rispetto al piano campagna di riferimento, considerando, altresì, ove necessario, la bonifica preliminare del terreno e la contestuale realizzazione dello strato di sottofondo delle fondazioni in misto naturale con funzione di migliorare le caratteristiche dello strato di terreno più superficiale e direttamente interessato dalle opere di fondazione, al di sotto del quale si determina un progressivo miglioramento delle proprietà geomeccaniche del terreno.
- q è il carico unitario, espresso in kN/m^2 (carico distribuito sulla platea di fondazione dovuto al peso proprio e ai carichi permanenti portati dalla struttura);
- σ'_{v0} è la tensione litostatica nel caso in cui la fondazione sia posta ad una profondità cui corrisponde una tensione di preconsolidazione cautelativamente stimata per un approfondimento del piano di fondazione non superiore al metro;
- B è la larghezza della fondazione la quale determina una corrispondente profondità d'influenza secondo il seguente grafico:

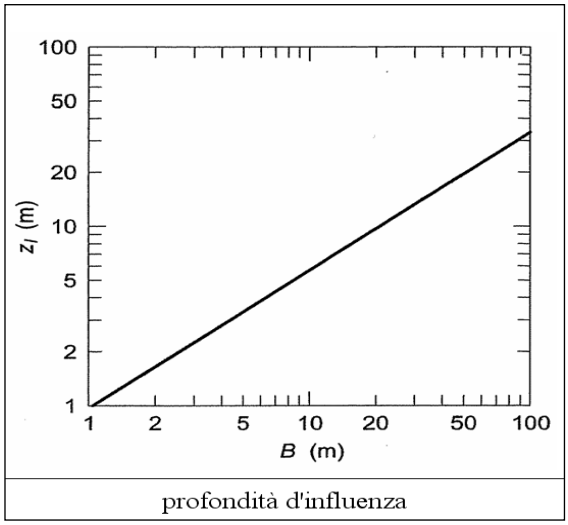

Figura 12 – Grafico per le determinazione della profondità d'influenza in funzione della larghezza della fondazione.

Per quanto riguarda, invece, la **<u>stima dei cedimenti immediati</u>** si può, inoltre, fare riferimento al metodo di Christian e Carrier (1978), secondo la seguente espressione:

$$S_i = \mu_0 \cdot \mu_1 \cdot \frac{p \cdot B}{E}$$

dove:

- p è il carico agente in fondazione;
- B è la larghezza della fondazione;
- E è il modulo di deformazione elastica del terreno.
- μ_0 e μ_1 sono fattori (di forma e di profondità) dipendenti rispettivamente dalla profondità del piano di fondazione e dallo spessore dello strato compressibile (*figura 13*).

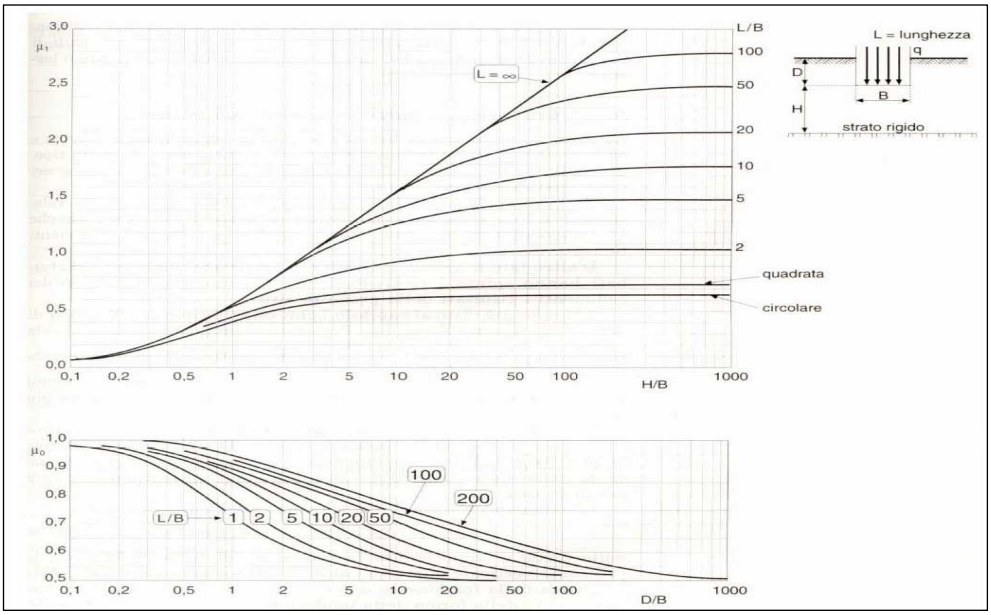

Figura 13 – Coefficienti di forma e di profondità per il calcolo del cedimento immediato.

7.4 Calcolo della capacità portante dei terreni di fondazione

Per fondazione si intende una struttura adatta a trasmettere il peso della costruzione e le altre forze agenti sulla sovrastruttura al terreno. I carichi trasmessi da una struttura al terreno di fondazione non devono superare la massima resistenza al taglio mobilitabile dal terreno stesso. Nel caso ciò avvenisse la conseguenza sarebbe la rottura degli strati portanti, che si manifesterebbe con ampie deformazioni non tollerabili dalla sovrastruttura.

Il valore della resistenza al taglio massima mobilitabile, e quindi il carico massimo teorico che può essere applicato dalla costruzione, viene definito capacità portante limite del terreno di fondazione. Vengono definite superficiali le fondazioni in cui sia verificata la disuguaglianza:

$$D < 4\,B$$

in cui D è la profondità di posa della fondazione dal piano campagna e B la dimensione del lato corto della fondazione stessa.

Il comportamento teorico del terreno di fondazione sottoposto all'applicazione di un carico viene generalmente schematizzato secondo le indicazioni di *Terzaghi (1943).* Si suppone quindi che, per una fondazione ruvida, nel terreno caricato del peso della costruzione si possano individuare 3 zone a comportamento meccanico e reologico differente (come indicato nella figura seguente):

1. zona, geometricamente assimilabile ad un cuneo (in figura indicata con il triangolo AEB), in cui il terreno mantiene un comportamento elastico e tende a penetrare negli strati sottostanti, solidalmente con la fondazione; questo cuneo forma un angolo uguale a φ (φ = angolo di resistenza al taglio del terreno su cui poggia la fondazione) rispetto all'orizzontale secondo *Terzaghi*, uguale a $45° + \varphi/2$ secondo *Meyerhof, Vesic e Brinch Hansen*;
2. zona di scorrimento radiale (in figura, settori AFB e ECB), rappresentabile graficamente da una serie di archi di spirale logaritmica per $\varphi > 0$ o di cerchio per $\varphi = 0$, dove avviene la trasmissione dello sforzo applicato dal cuneo di materiale che costituisce la zona 1;
3. zona che si oppone alla penetrazione del cuneo della zona 1 nel terreno (in figura, triangoli AGF e ECD); si assume teoricamente che assuma la forma di un triangolo isoscele con un'inclinazione dei due lati uguali rispetto all'orizzontale di $45° - \varphi/2$; sulla superficie di questa zona agisce, con effetto stabilizzante, il peso del terreno sopra il piano di posa della fondazione ed altri eventuali sovraccarichi.

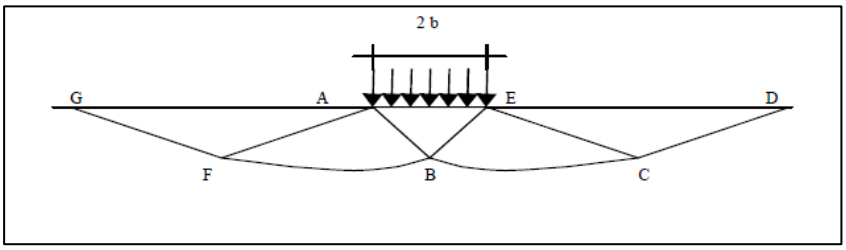

Figura 14 – Schema teorico del comportamento del terreno di fondazione.

Si ha la rottura del terreno di fondazione quando il carico applicato dal cuneo della zona 1 supera la resistenza passiva della zona 3. In questo caso la zona 1 penetrerà nel terreno di fondazione, che tenderà a rifluire lateralmente lungo la zona di scorrimento plastico, dando luogo a rigonfiamenti superficiali.

Si può giungere alla rottura del terreno attraverso tre modalità differenti:

a) rottura di tipo generalizzato: in terreni addensati e/o consolidati la resistenza al taglio mobilitata aumenta rapidamente per piccoli incrementi di deformazione; al superamento della portanza limite il terreno si rompe e subisce grosse deformazioni; riportando in grafico gli sforzi applicati e le deformazioni relative risulta facilmente identificabile il valore della resistenza al taglio massima;
b) rottura di tipo locale: in terreni sciolti e/o scarsamente consolidati la resistenza al taglio mobilitata aumenta gradualmente in relazione a significativi incrementi di deformazione; risulta difficile individuare in questo caso la resistenza al taglio massima, superata la quale si ha la rottura del terreno, in quanto qui il fenomeno avviene con maggiore gradualità;
c) rottura di tipo intermedio: presenta caratteristiche intermedie fra la rottura di tipo generalizzato e locale.

Numerose sono le relazioni analitiche proposte per valutare la capacità portante di una fondazione superficiale. Le più utilizzate ed attendibili sono quelle di *Terzaghi, Meyerhof, Vesic e Brinch-Hansen*. Tra tutte le suddette formule, quella più corretta da utilizzare nel caso in esame è risultata essere la formula di *Brinch-Hansen*, così come indicato nei recenti Eurocodice 7 (progettazione geotecnica – Parte 1: Regole generali) ed Eurocodice 8 (indicazioni progettuali per la resistenza sismica delle strutture - Parte 5: Fondazioni, strutture di contenimento ed aspetti geotecnici), valida per terreni sciolti di qualunque natura e per tipologie di fondazione sia superficiali che profonde.

Affinché una fondazione possa resistere al carico di progetto con sicurezza nei riguardi della rottura generale deve essere soddisfatta la seguente disuguaglianza:

$$Vd \leq Rd$$

Dove Vd è il carico di progetto, normale alla base della fondazione, comprendente anche il peso della fondazione stessa; mentre Rd è il carico limite di progetto della fondazione nei confronti di carichi normali, tenendo conto anche dell'effetto di carichi inclinati od eccentrici. Nella valutazione analitica del carico limite di progetto Rd si devono considerare le situazioni a breve e a lungo termine nei terreni a grana fine.

CAPACITÀ PORTANTE IN CONDIZIONI DRENATE

Metodo di Terzaghi (1955)

Terzaghi, proseguendo lo studio di *Caquot*, ha apportato alcune modifiche per tenere conto delle effettive caratteristiche dell'insieme opera di fondazione-terreno.

L'espressione del carico limite risulta:

$$q_{\lim} = A \cdot \gamma \cdot h + B \cdot c + C \cdot \gamma \cdot b$$

in cui "C" è un coefficiente che risulta funzione dell'angolo di attrito φ del terreno posto al di sotto del piano di posa e dell'angolo φ prima definito; b è la semilarghezza della striscia.

Inoltre, basandosi su dati sperimentali, Terzaghi passa dal problema piano al problema spaziale introducendo dei fattori di forma. Un ulteriore contributo è stato apportato da Terzaghi sull'effettivo comportamento del terreno.

In un terreno molto sciolto, invece, la relazione carichi-cedimenti presenta un tratto curvilineo accentuato fin dai carichi più bassi per effetto di una rottura progressiva del terreno (rottura locale); di conseguenza l'individuazione del carico limite non è così chiara ed evidente come nel caso dei terreni compatti. Per i terreni molto sciolti, Terzaghi consiglia, quindi, di prendere in considerazione il valore di carico limite che si calcola con la formula precedente introducendo però dei valori ridotti delle caratteristiche meccaniche del terreno e precisamente:

$$\tan \varphi_{rid} = \frac{2}{3} \cdot \tan \varphi \ \text{ e } \ c_{rid} = \frac{2}{3} \cdot c$$

Esplicitando i coefficienti della formula precedente, la formula di *Terzaghi* può essere scritta:

$$q_{\lim} = c \cdot N_c + \gamma \cdot D \cdot N_q + \frac{1}{2} \cdot \gamma \cdot B \cdot N_\gamma$$

dove N_c, N_q, N_γ sono i fattori di capacità portante, dipendenti dall'angolo di resistenza al taglio e così definiti:

$$N_q = e^{\pi \tan\varphi'} \tan^2\left(\frac{\pi}{4} + \frac{\varphi'}{2}\right)$$

$$N_c = \frac{N_q - 1}{\tan\varphi'}$$

$$N_\gamma = 2\left(N_q - 1\right)\tan\ \varphi'$$

Formula di Brinch – Hansen (1970)

Rappresenta un'ulteriore estensione della formula di *Terzaghi*; che prevede l'introduzione di una serie di coefficienti correttivi che tengono conto di vari fattori, espressa dalla seguente formula generale:

$$q_{\lim} = c \cdot N_c \cdot s_c \cdot d_c \cdot i_c \cdot b_c \cdot g_c + \gamma \cdot D \cdot N_q \cdot s_q \cdot d_q \cdot i_q \cdot b_q \cdot g_q + \frac{1}{2} \cdot \gamma \cdot B \cdot N_\gamma \cdot s_\gamma \cdot s_\gamma \cdot d_\gamma \cdot i_\gamma \cdot b_\gamma \cdot g_\gamma$$

dove:

- N_c, N_q, N_γ = fattori di capacità portante, dipendenti dall'angolo di resistenza al taglio e precedentemente definiti;
- s_c, s_q, s_γ = fattori di forma della fondazione;
- i_c, i_q, i_γ = fattori correttivi che tengono conto dell'inclinazione del carico;
- b_c, b_q, b_γ = fattori correttivi che tengono conto dell'inclinazione della base della fondazione;
- d_c, d_q, d_γ = fattori dipendenti dalla profondità "D" del piano di posa della fondazione;
- g_c, g_q, g_γ = fattori correttivi che tengono conto dell'inclinazione del piano campagna.

La formula di *Brinch – Hansen* vale per qualsiasi rapporto D/B, quindi, sia per fondazioni superficiali che profonde, ma lo stesso autore introdusse dei coefficienti per meglio interpretare il comportamento reale della fondazione, senza di essi, infatti, si avrebbe un aumento troppo forte del carico limite con la profondità:

Per valori di D/B < 1

$$d_c = d_q - \frac{1 - d_q}{N_c \cdot \tan\varphi'}$$

$$d_q = 1 + 2\tan\varphi'\left(1 - \sin\varphi'\right)^2 \frac{D}{B}$$

$$d_\gamma = 1$$

Per valori di D/B > 1

$$d_c = d_q - \frac{1-d_q}{N_c \cdot \tan\varphi'}$$

$$d_q = 1 + 2\tan\varphi'(1-\sin\varphi')^2 \tan^{-1}\frac{D}{B}$$

$$d_\gamma = 1$$

Fattore di forma (formulazioni in riferimento ai risultati ottenuti da De Beer):

$$s_c = 1 + \frac{N_q}{N_c}\frac{B}{L} \qquad s_q = 1 + \frac{B}{L}\tan\varphi' \qquad s_\gamma = 1 - 0.4\frac{B}{L}$$

<u>NB: nel caso di fondazione nastriforme i suddetti coefficienti risultano pari all'unità.</u>

Fattore di inclinazione di carico:

$$i_c = i_q - \frac{1-i_q}{N_c \tan\varphi'}$$

$$i_q = \left(1 - \frac{H}{N + BLc'\cot g\varphi'}\right)^m$$

$$i_\gamma = \left(1 - \frac{H}{N + BLc'\cot g\varphi'}\right)^{m+1}$$

$$m = \frac{2 + \frac{B}{L}}{1 + \frac{B}{L}}$$

Fattore di inclinazione del piano di fondazione:

$$b_q = (1 - \alpha\tan\varphi')^2 \qquad b_c = b_q - \frac{1-b_q}{N_c \tan\varphi'} \qquad b_\gamma = b_q$$

con α = angolo di inclinazione del piano di fondazione.

Fattore di inclinazione del terreno (piano campagna):

$$g_q = (1 - \tan\omega)^2 \qquad g_c = g_q - \frac{1-g_q}{N_c \tan\varphi'} \qquad g_\gamma = g_q$$

con ω = angolo di inclinazione del piano campagna.

7.5 Verifiche di stabilità dei fronti scavo

La realizzazione di strutture o infrastrutture su versanti, sulla sommità o al piede di pendii naturali, oppure l'esecuzione di opere provvisionali per il sostegno provvisorio degli scavi o l'esecuzione di fronti scavo a cielo aperto, richiede la preventiva verifica delle condizioni di stabilità, affinché siano garantite le necessarie condizioni di resistenza e di deformabilità delle opere durante il loro esercizio e in base alla funzionalità per esse prevista, in modo tale da non pregiudicare le condizioni di sicurezza e di funzionalità progettualmente previste. Tali verifiche possono riguardare, pertanto, sia la stabilità globale del complesso opera di sostegno – terreno sia la stabilità dei fronti scavo durante la fase di esecuzione delle opere. La verifica dei fronti scavo farà, in particolare, riferimento alla condizione transitoria di cantiere.

Le verifiche saranno generalmente trattate in termini di tensioni efficaci considerando, ove potenzialmente presente, un sovraccarico uniformemente distribuito sul ciglio superiore dello scavo pari a 10,0 kN/m^2. Per simulare lo stazionamento dei mezzi o delle attrezzature di cantiere.

L'analisi delle condizioni di stabilità, considerata la provvisorietà e la temporaneità degli scavi, sarà effettuata in condizioni statiche senza, quindi, tenere in conto l'azione sismica.

I metodi di calcolo utilizzati per tali verifiche sono quello di *Bishop (1955*) per le opere di sostegno e quello di *Jambu ("Stability analisys of slopes with dimensionless parameters" – 1954*) per i fronti scavo. L'analisi di stabilità adottata dai suddetti metodi è quella dell'*equilibrio limite globale*. La verifica si conduce, quindi, esaminando un certo numero di possibili superfici di scivolamento per ricercare quella che rappresenta il rapporto minimo tra la resistenza a rottura disponibile e quella effettivamente mobilitata; il valore di questo rapporto costituisce il coefficiente di sicurezza del pendio. Scelta quindi una superficie di rottura, la si suddivide in conci la parte instabile, studiando dapprima l'equilibrio della singola striscia e poi la stabilità globale.

Le ipotesi del metodo in questione sono:

- il coefficiente di sicurezza è definito come il rapporto tra la resistenza al taglio lungo un'ipotetica superficie di scorrimento e lo sforzo di taglio mobilitato lungo la stessa superficie;
- la rottura avviene, per il raggiungimento della resistenza limite, contemporaneamente in tutti i punti della superficie di scorrimento;
- in condizioni di rottura la resistenza al taglio è completamente mobilitata lungo la superficie di scorrimento, tranne che nella fascia di terreno interessata da eventuali

tension-crack;

- il coefficiente di sicurezza è costante in tutti i punti della superficie di scorrimento;
- la resistenza al taglio è espressa dal criterio di *Mohr-Coulomb*: $\tau = c' + \sigma'_n \cdot tg\ \varphi'$;
- la superficie di scorrimento è cilindrica per il metodo di Bishop ed irregolare per il metodo di Jambu;
- l'analisi è effettuata in condizioni bidimensionali.

Nell'utilizzare tali metodi di calcolo si fa sempre riferimento ad un problema piano nel quale, quindi, la superficie di scorrimento è rappresentata da una curva, trascurando ogni effetto dovuto alle sezioni adiacenti. Tali schematizzazioni sono giustificabili se le proprietà meccaniche dei terreni sono omogenee in direzione trasversale e quando l'estensione del pendio è predominante sulla dimensione trasversale. In generale la massa di terreno compresa tra la superficie di scorrimento e la superficie del suolo viene suddivisa in conci e le forze che agiscono su ciascuna striscia possono essere calcolate imponendo le condizioni di equilibrio. L'equilibrio dell'intera massa è dato, quindi, dalla composizione delle forze che agiscono su ciascuna striscia ("*Metodo delle strisce*").

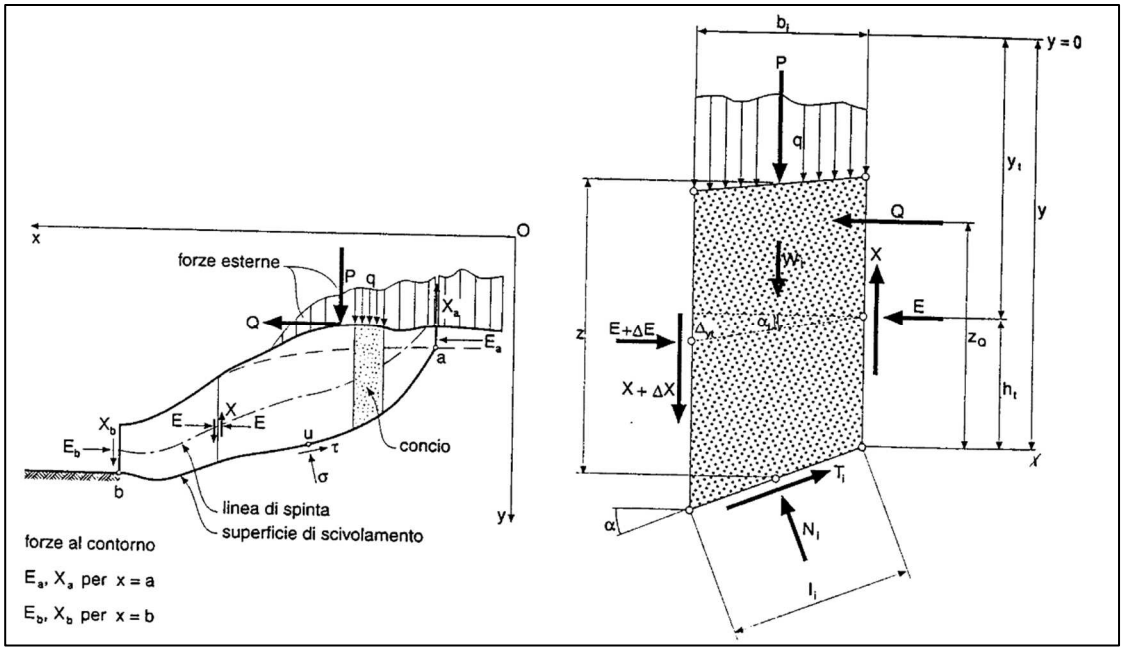

Figura 15 – Schematizzazione di calcolo del "metodo delle strisce".

Le forze agenti su ciascun concio sono, con riferimento alla figura precedente: Il peso W, l'azione tangenziale alla base T, l'azione normale efficace alla base N, la spinta dell'acqua sulla base U, gli sforzi tangenziali X e quelli normali E sulle superfici laterali (forze d'interfaccia).

Le condizioni di equilibrio di ciascun concio sono date dalle tre equazioni della statica, pertanto, ammettendo di suddividere il volume di terreno in esame in n conci, si hanno a disposizione 3n equazioni, mentre le incognite del problema risultano essere (5n-2) così composte:

- n valori per l'azione delle forze normali efficaci alla base;
- n-1 valori per ciascuna delle forze d'interfaccia (X ed E);
- n-1 valori per il punto di applicazione delle forze d'interfaccia in direzione orizzontale;
- n valori per il punto di applicazione degli sforzi normali efficaci alla base.
- 1 valore del coefficiente di sicurezza (valore minimo).

Dal bilancio fra le equazioni disponibili e il numero delle incognite risulta che si hanno (2n-2) incognite sovrabbondanti e, quindi, il problema risulta staticamente indeterminato; per riportarlo a staticamente determinato e rendere possibile la soluzione del sistema di equazioni che descrivono l'equilibrio della massa di terreno potenzialmente instabile, è necessario introdurre alcune ipotesi semplificative che consentono di ridurre il numero delle incognite del problema. La prima tra tutte, che risulta, tra le altre cose, comune a tutti i metodi, è quella di considerare centrata la forza agente alla base della striscia, il che è accettabile nel caso in cui i conci siano di larghezza limitata. Le altre ipotesi necessarie per risolvere il sistema di equazioni sono diverse a seconda del metodo di calcolo considerato.

Con riferimento alle ipotesi e al metodo di calcolo descritti in precedenza il coefficiente di sicurezza FS di un fronte scavo in un terreno omogeneo coesivo (c=c'; φ=φ') può essere espressa con la seguente relazione:

$$FS = \frac{N_{cf} \cdot c}{\gamma \cdot H}$$

dove:

N_{cf} = numero di stabilità;

c = coesione drenata (c');

γ = peso di unità di volume del terreno;

H = altezza dello scavo.

Il numero di stabilità N_{cf} può essere ricavato in forma grafica attraverso l'abaco riportato in *figura 16* seguente:

Tale numero di stabilità viene ad essere funzione dell'inclinazione del fronte scavo (β) e del fattore adimensionale λ_{cf}, ottenuto dall'espressione:

$$\lambda_{cf} = \frac{\gamma \cdot H \cdot tg\varphi'}{c'}$$

dove:

c = coesione drenata del terreno (c’);

φ = angolo di attrito del terreno;

γ = peso di unità di volume del terreno;

H = altezza dello scavo.

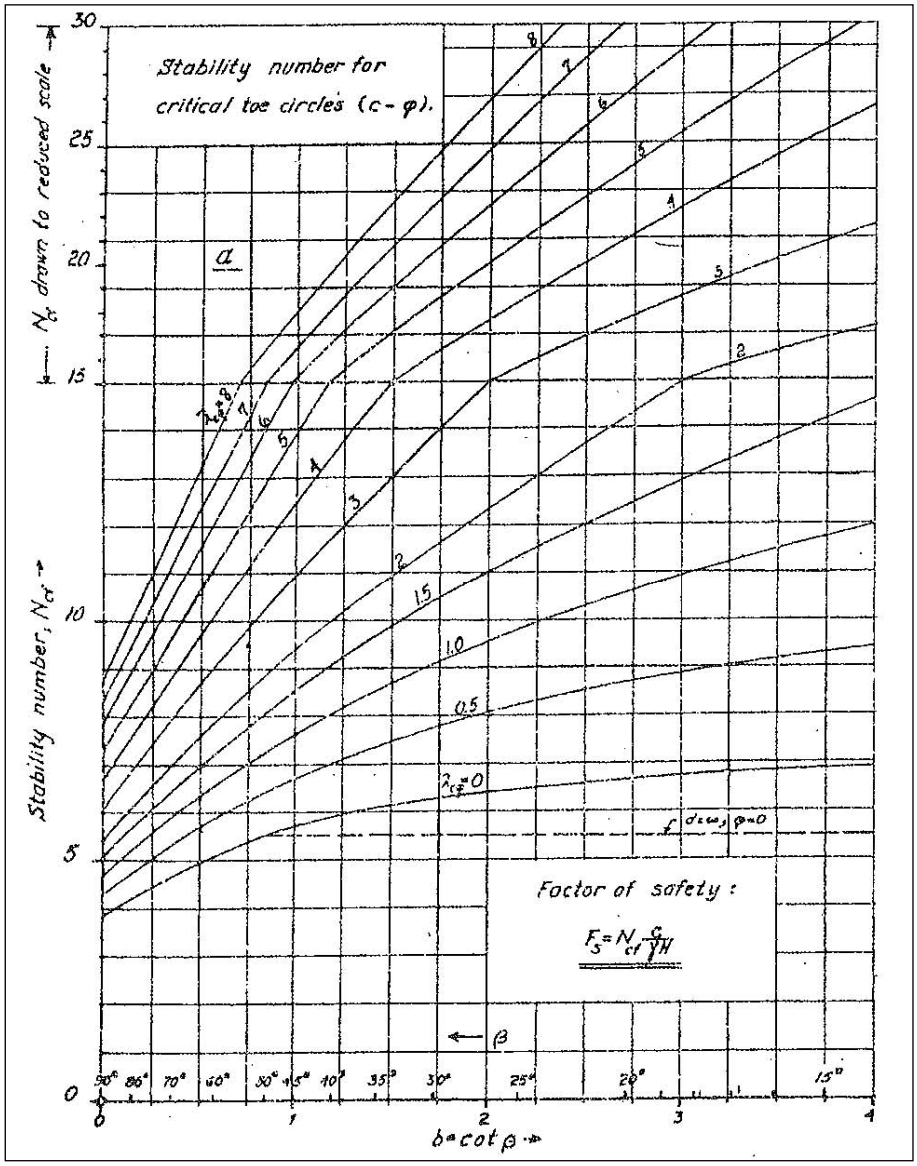

Figura 16 – Numero di stabilità per φ >0.

Con l’impiego, quindi, dei grafici nella *figura 17* si possono individuare le coordinate del centro del cerchio critico.

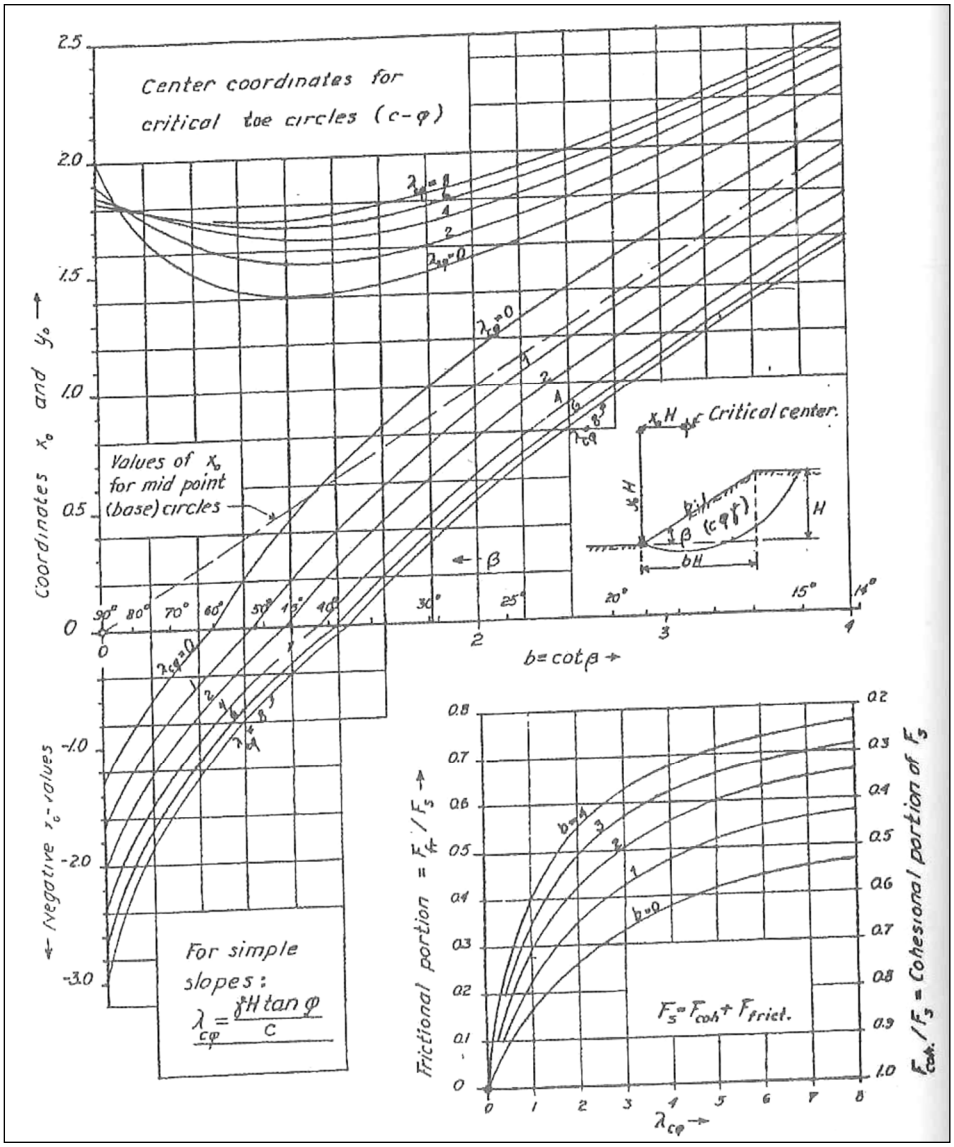

Figura 17 – Centro del cerchio critico per φ >0.

Nel caso di fronte scavo o pendio con presenza di falda (pendio sommerso, pendio saturo con falda prossima al piano campagna o pendio con presenza di moto di filtrazione), l'analisi può essere svolta, in maniera analoga, con le seguenti espressioni:

$$FS = \frac{N_{cf} \cdot c}{\gamma_1 \cdot H}$$

$$\lambda_{cf} = \frac{\gamma_2 \cdot H \cdot tg\varphi'}{c'}$$

Modificando opportunamente i valori dei pesi di unità di volume del terreno presenti nelle suddette formule. In particolare si avranno i seguenti possibili casi (*figura 18*):

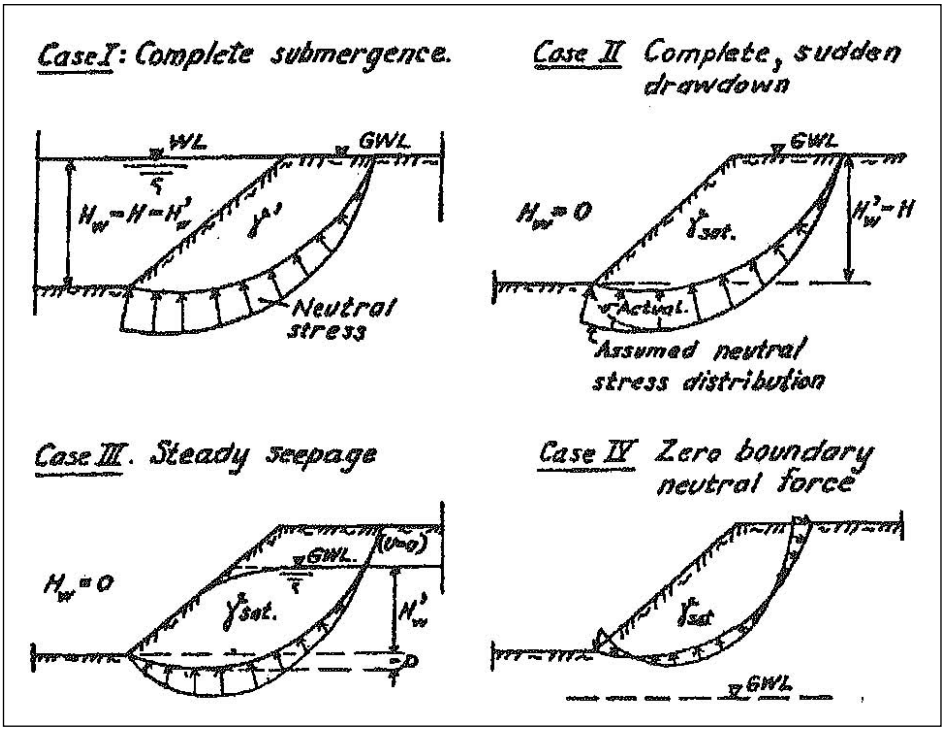

Figura 18 – Illustrazione delle possibili condizioni limite in presenza di falda.

- pendio sommerso: $\gamma_1 = \gamma_2 = \gamma - \gamma_w$
- pendio saturo con falda prossima al piano campagna: $\gamma_1 = \gamma$; $\gamma_2 = \gamma - \gamma_w$
- pendio con presenza di moto di filtrazione: $\gamma_1 = \gamma$; $\gamma_2 = \gamma - \gamma_w$ (H'_w/H).

Nei casi di pendio parzialmente sommerso il coefficiente di sicurezza è dato, quindi, dalla seguente espressione:

$$FS = \frac{\mu w \cdot N_{cf} \cdot c}{\gamma_{sat} \cdot H - \gamma_w \cdot Hw}$$

dove:

N_{cf} = numero di stabilità;

c = coesione drenata del terreno (c');

γ_{sat} = peso di unità di volume del terreno in condizioni sature;

H = altezza dello scavo;

Hw = altezza di falda;

μw = coefficiente correttivo che tiene conto dell'effetto della sommersione.

Il valore del coefficiente adimensionale μ_w viene ricavato dalla *figura 19* seguente ed è funzione del rapporto H'_w/H e dall'inclinazione dello scavo β, mentre il valore di N_{cf} si ricava sempre dal grafico di *figura 16* assumendo per λ_{cf} il seguente valore:

$$\lambda_{cf} = \frac{\left(\gamma_{sat} H - \gamma_w H'_w\right) \cdot tg\varphi'}{c' \cdot \mu'_w}$$

con μ'_w ricavato dal grafico di *figura 19* noti β e H'_w/H.

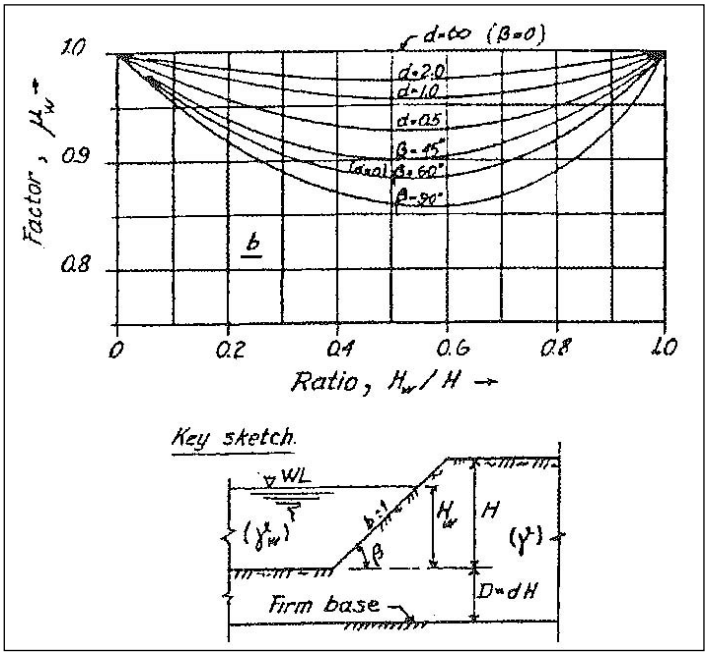

Figura 19 – Fattore riduttivo μ_w.

Nel caso, infine, di presenza di sovraccarico in sommità del pendio o del fronte scavo, combinato con eventuale sommersione ed eventuale tension-crack, si avrà la seguente configurazione:

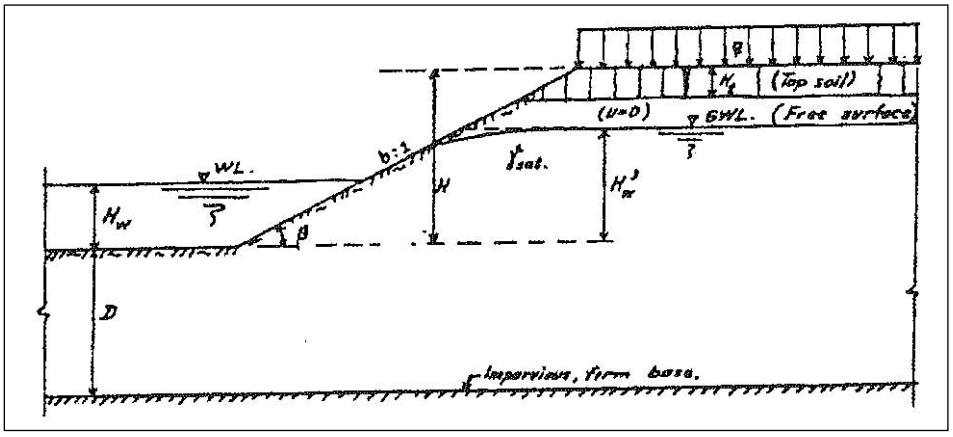

Figura 20 – Combinazione di sovraccarico, sommersione, tension-crack e filtrazione.

In tal caso il coefficiente di sicurezza assume la seguente espressione:

$$FS = \frac{N_{cf} \cdot c}{\gamma_1 \cdot H}$$

con il valore di λ_{cf} dato da:

$$\lambda_{cf} = \frac{\gamma_2 \cdot H \cdot tg\varphi'}{c'}$$

con:

$$\gamma_1 = \frac{\gamma_{sat} H + q - \gamma_w H_w}{\mu_w \mu_q \mu_t} \qquad \gamma_2 = \frac{\gamma_{sat} H + q - \gamma_w H'_w}{\mu'_w \mu_q}$$

Per la valutazione dei coefficienti μ_w, μ_q e μ_t si utilizzeranno le *figure 19 e 20 e 21* seguenti:

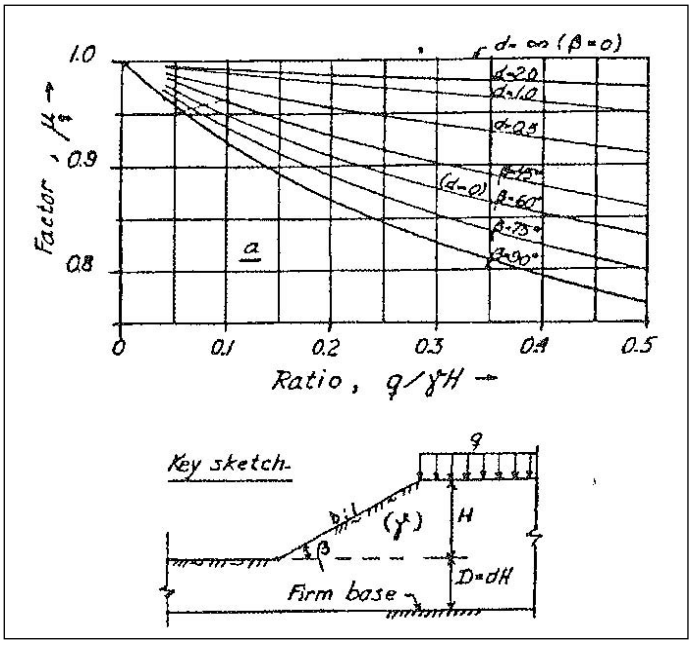

Figura 20 – Fattore riduttivo μ_q.

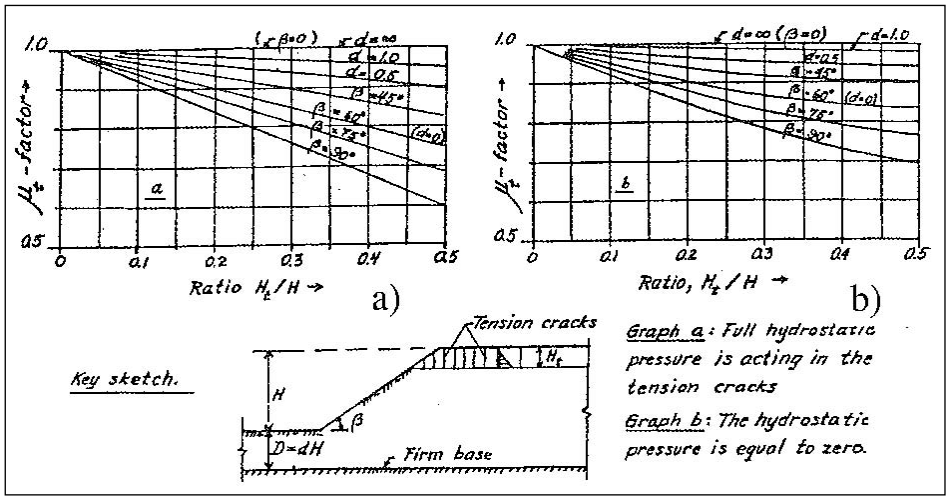

Figura 21 – Fattore riduttivo μ_t..

7.6 Modelli di calcolo e di verifica geotecnica

La modellazione e le verifiche geotecniche dell'edificio filtri e controllo irriguo sono state effettuate mediante il codice di calcolo numerico agli elementi finiti *Midas Gen 2019,* utilizzato per la modellazione strutturale generale degli stessi.

I risultati relativi alla stima dei cedimenti delle fondazioni ottenuti con il modello di calcolo agli elementi finiti sono stati, inoltre, opportunamente confrontati con quelli ottenuti applicando modelli di valutazione semplificata sia a scopo di riscontro numerico che al fine della **validazione** e della **verifica di attendibilità** dei risultati stessi secondo quanto previsto dalle N.T.C.

Le verifiche dei fronti scavo per la posa delle condotte irrigue sono state, invece, effettuate con l'ausilio di fogli di calcolo semplificati conformi ai criteri di calcolo e verifica delle N.T.C..

8. Risultati di calcolo e verifiche strutturali e geotecniche

Il presente capitolo riporta i risultati di calcolo e di dimensionamento geotecnico-strutturale a stato limite ultimo e di esercizio pertinenti ai manufatti caratterizzati da una maggiore rilevanza strutturale, così come individuati al *capitolo 1* della presente relazione.

Il dimensionamento strutturale è stato svolto sulla base dei metodi di analisi e di calcolo indicati ai *capitoli 5 e 6* della presente relazione e in ottemperanza alla presente fase di progettazione ai sensi del D.Lgs. 50/2016 e ss.mm.ii. e del D.P.R. 207/2010 e ss.mm.ii.. Le armature di calcolo e le sezioni di progetto sono state, inoltre, conformate ai dettagli costruttivi previsti dai *paragrafi 4.1.6 e 7.4.6* delle N.T.C.-2018 e relativa Circolare applicativa.

Si ribadisce che per quanto riguarda tutti gli elementi e le opere prefabbricate, sulla base di quanto già indicato al *paragrafo 3.1.6* della presente relazione, sarà onere del produttore fornire alla Direzione Lavori, la documentazione tecnica completa per l'espletamento delle finalità di cui alle N.T.C.-2018, alla Legge 1086/71, al D.P.R. 380/2001 e ss.mm.ii. ed alla D.G.R. n. 65-7656/2014 e s.m.i. (D.G.R. n. 6-887 del 30.12.2019).

Si riportano, quindi, nel seguito i risultati di calcolo e di verifica, pertinenti alle opere a maggiore rilevanza strutturale previste in progetto.

8.1 Edificio filtri e controllo irriguo

L'edificio filtri e telecontrollo verrà realizzato con platea di fondazione in c.c.a. di spessore pari a 40 cm, con dimensioni in pianta di m 11,6 x 13,7 circa, dotata di sufficiente rigidezza in modo tale da distribuire in modo omogeneo le pressioni trasmesse dalle strutture soprastanti. L'edifico presenta altezza in gronda pari a circa 3,0 m e al colmo di circa 5,0 m.

La struttura in elevazione sarà di tipo a telaio, con pilastri in c.c.a. di sezione cm 30x30 e cordoli di irrigidimento perimetrali e di colmo; il tamponamento perimetrale è previsto in muratura in blocchi in cls di spessore pari a 25 cm. La copertura verrà realizzata in legno per uso strutturale massiccio da costruzione con classe di resistenza minima C24. La trave di colmo sarà posizionata sul cordolo di collegamento del colmo in c.c.a.. Per i dettagli costruttivi si rimanda agli specifici elaborati grafici di progetto (*Tavv. n. 9 e 16*).

Vengono, quindi, nel seguito riportati i principali risultati di calcolo, con l'inviluppo delle sollecitazioni massime e le relative verifiche a **stato limite ultimo e a stato limite di esercizio**.

8.1.1 Modello di calcolo

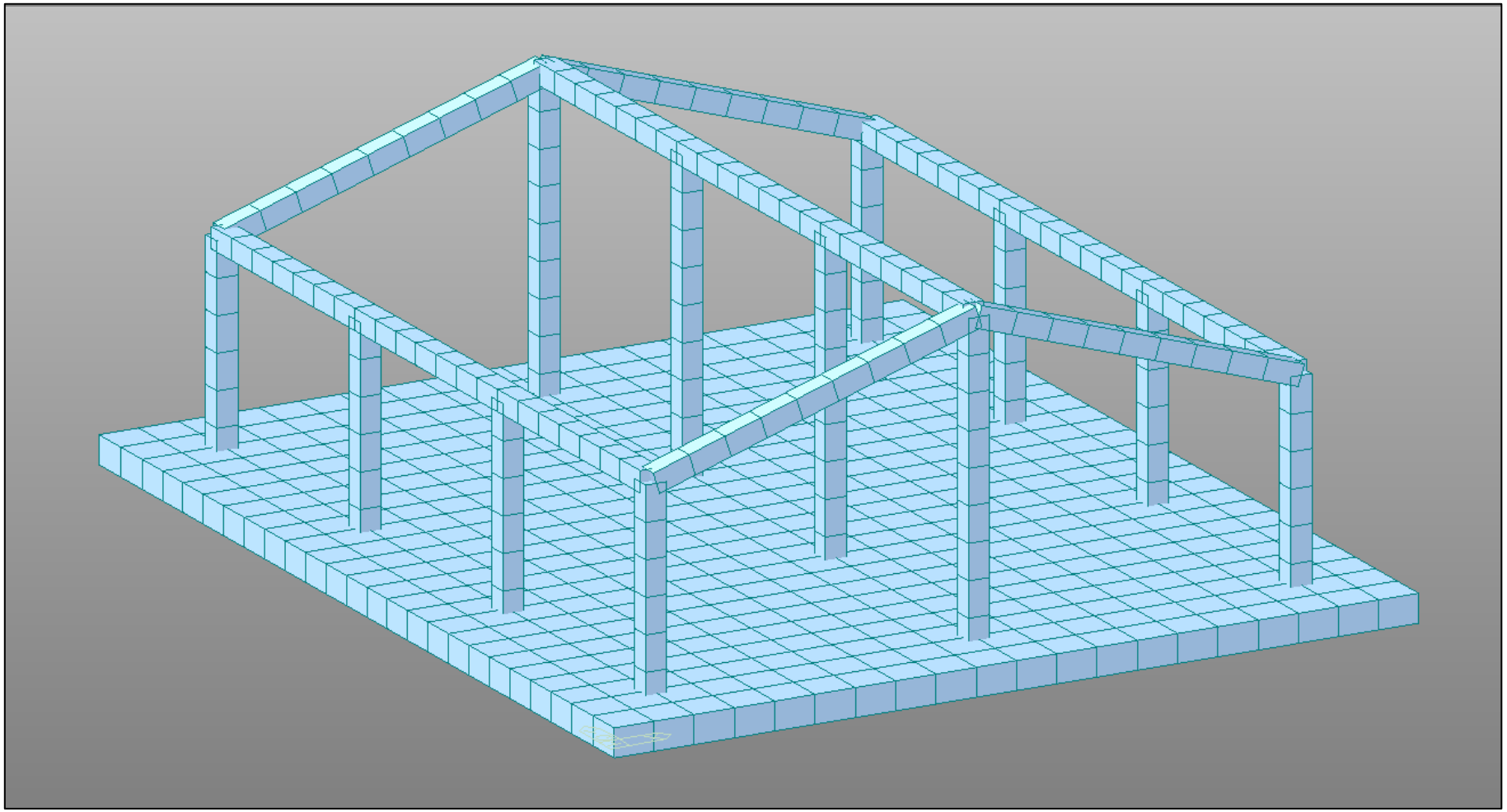

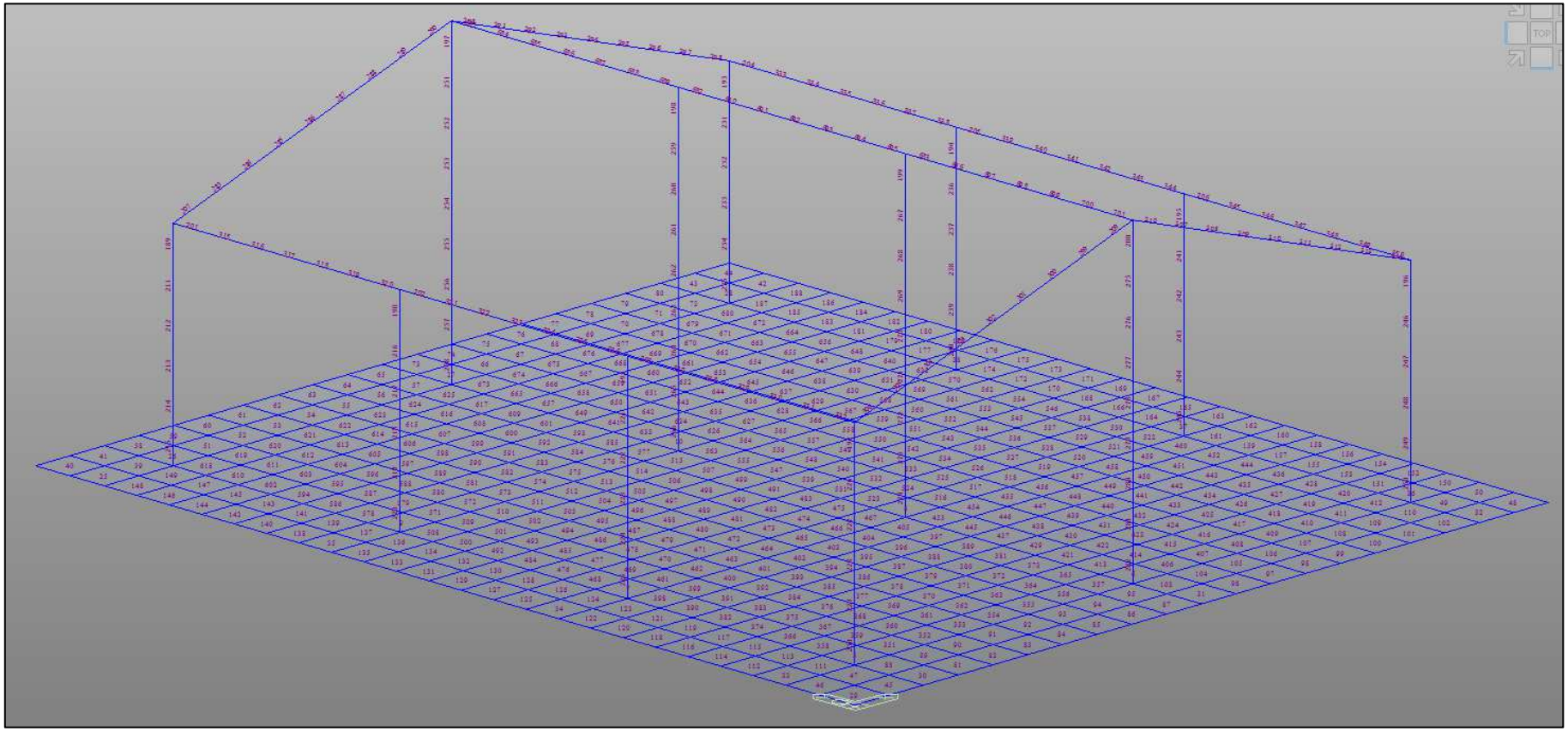

NB: si evidenzia che il modello di calcolo agli elementi finiti è stato predisposto senza considerare gli approfondimenti locali della platea in corrispondenza dei cunicoli di ingresso delle condotte in quanto trascurabili rispetto al comportamento globale della costruzione e ai valori massimi di sollecitazione. Tale considerazione è, infatti, confermata dai valori delle sollecitazioni di calcolo ottenute dal modello, le quali risultano massime in corrispondenza dei pilastri e di entità praticamente trascurabile in mezzeria (tra i pilastri), ovvero in corrispondenza dei suddetti ribassamenti.
Gli stessi approfondimenti determinano, peraltro, un miglioramento complessivo del comportamento geotecnico del sistema terreno-fondazione rispetto al modello di calcolo predisposto, il quale è, pertanto, da considerarsi a favore di sicurezza.

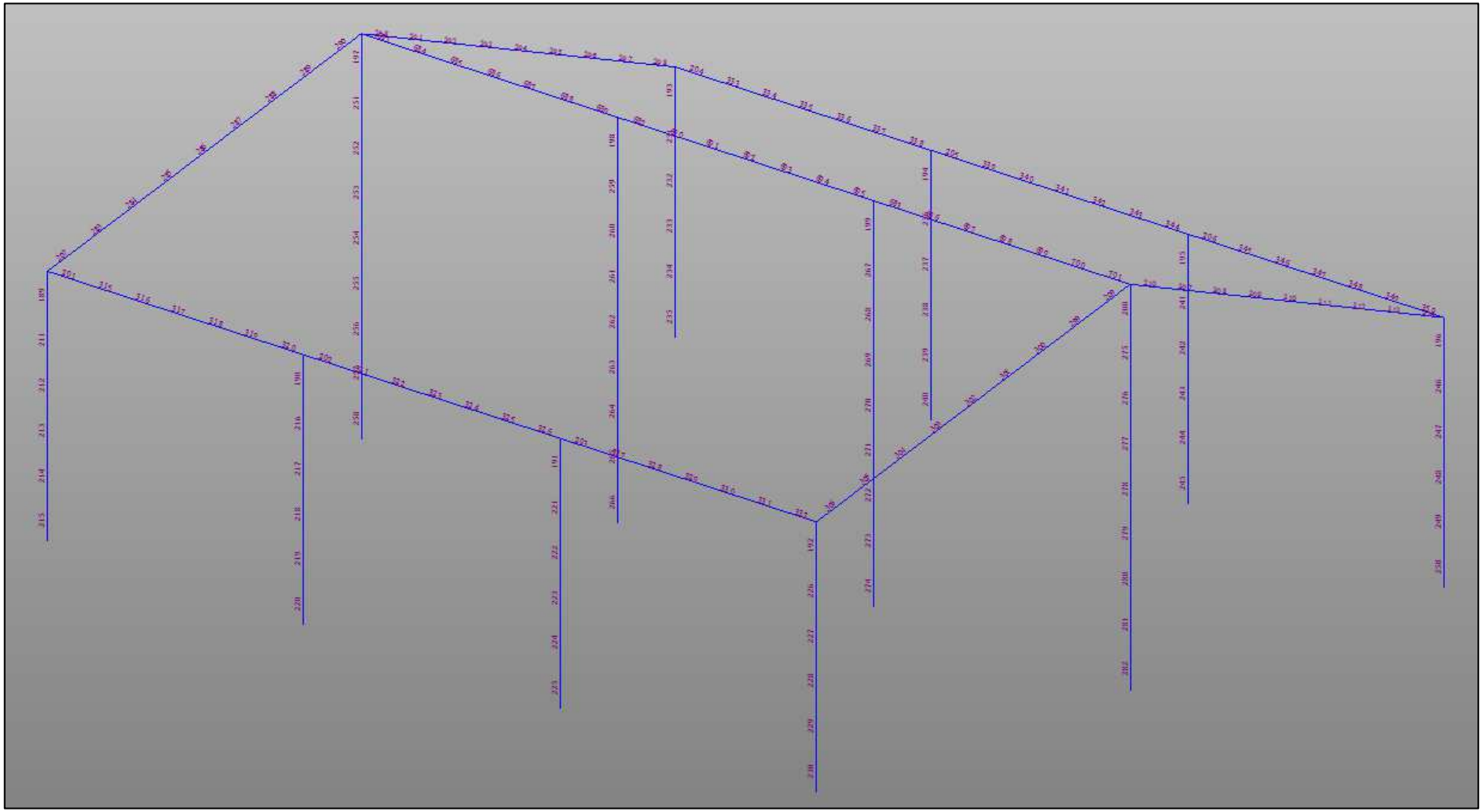

8.1.2 Sintesi dei risultati

DEFORMATA GLOBALE A SLE

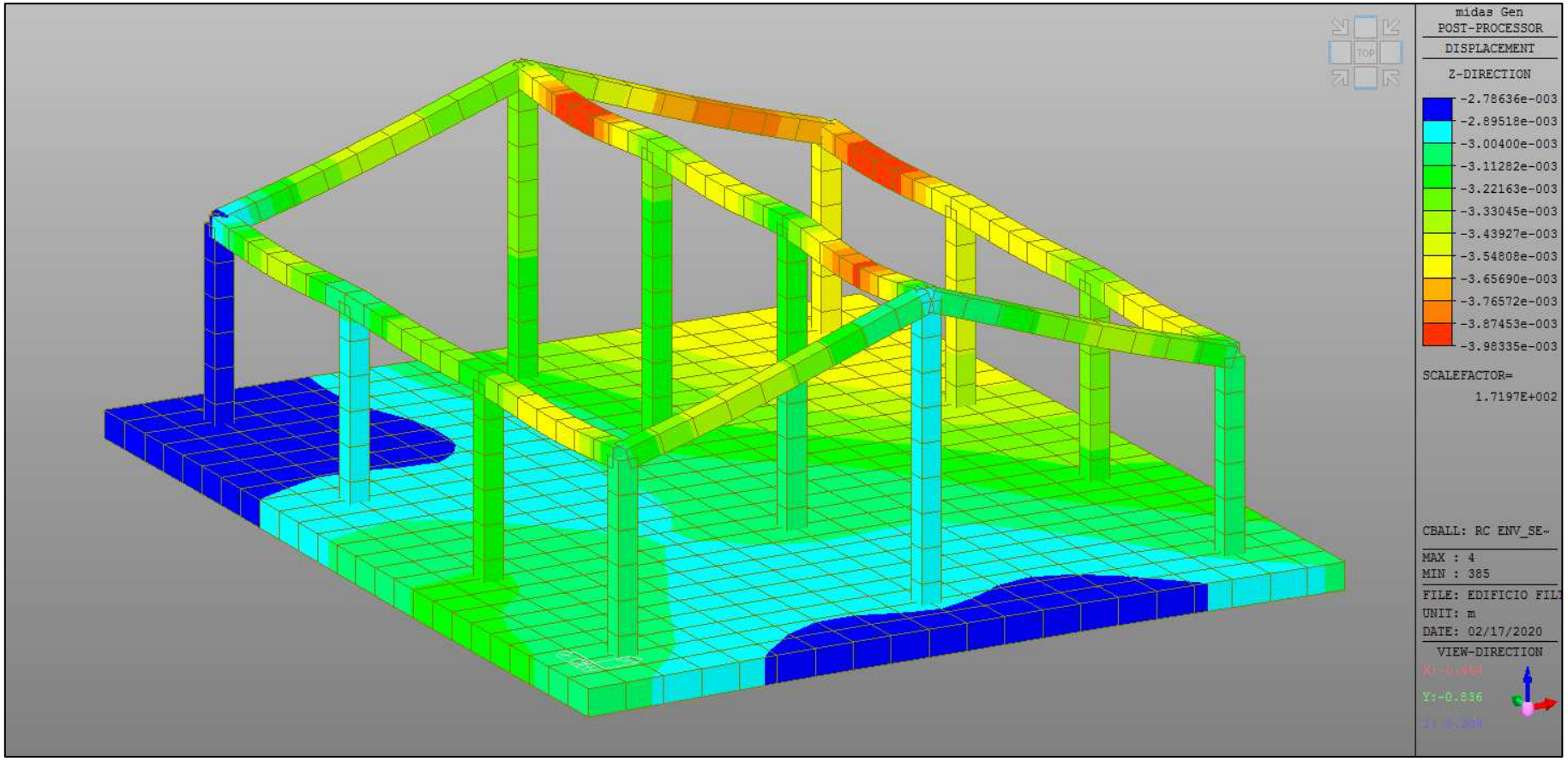

CEDIMENTI IN FONDAZIONE

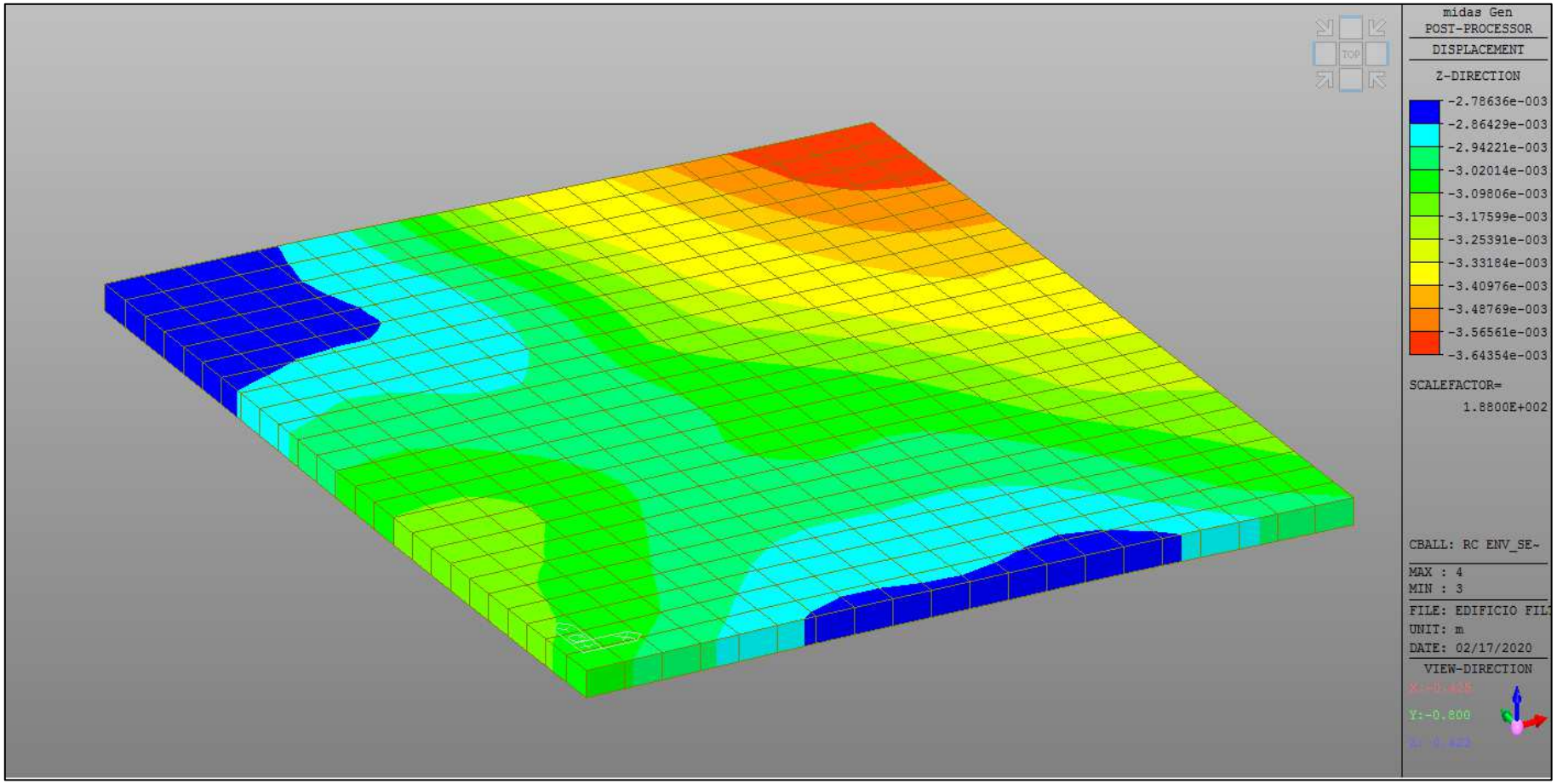

Il cedimento immediato massimo atteso in fondazione a stato limite di esercizio risulta di pochi millimetri (circa 3/4 mm).

PRESSIONI TRASMESSE IN FONDAZIONE A SLE

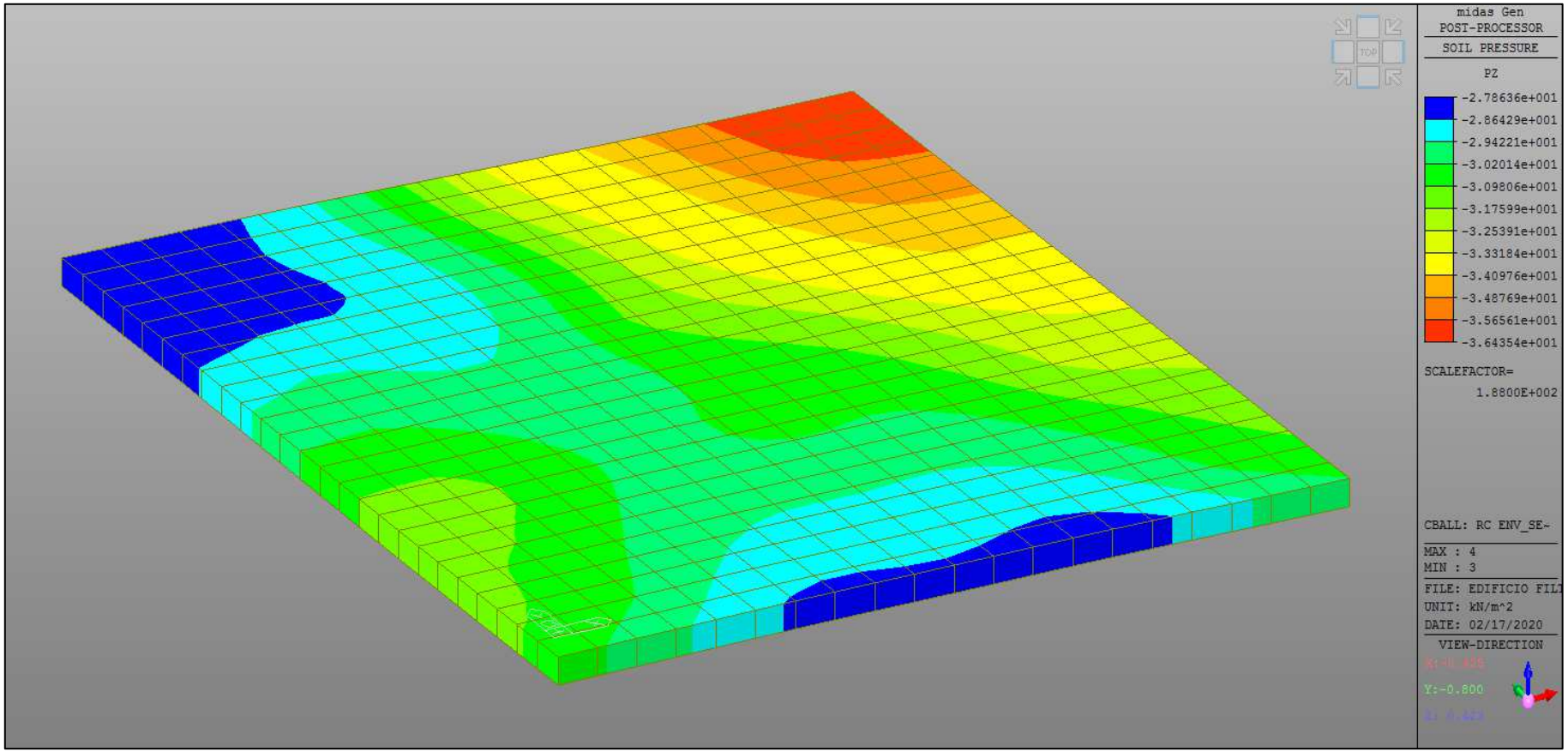

PRESSIONI TRASMESSE IN FONDAZIONE A SLU

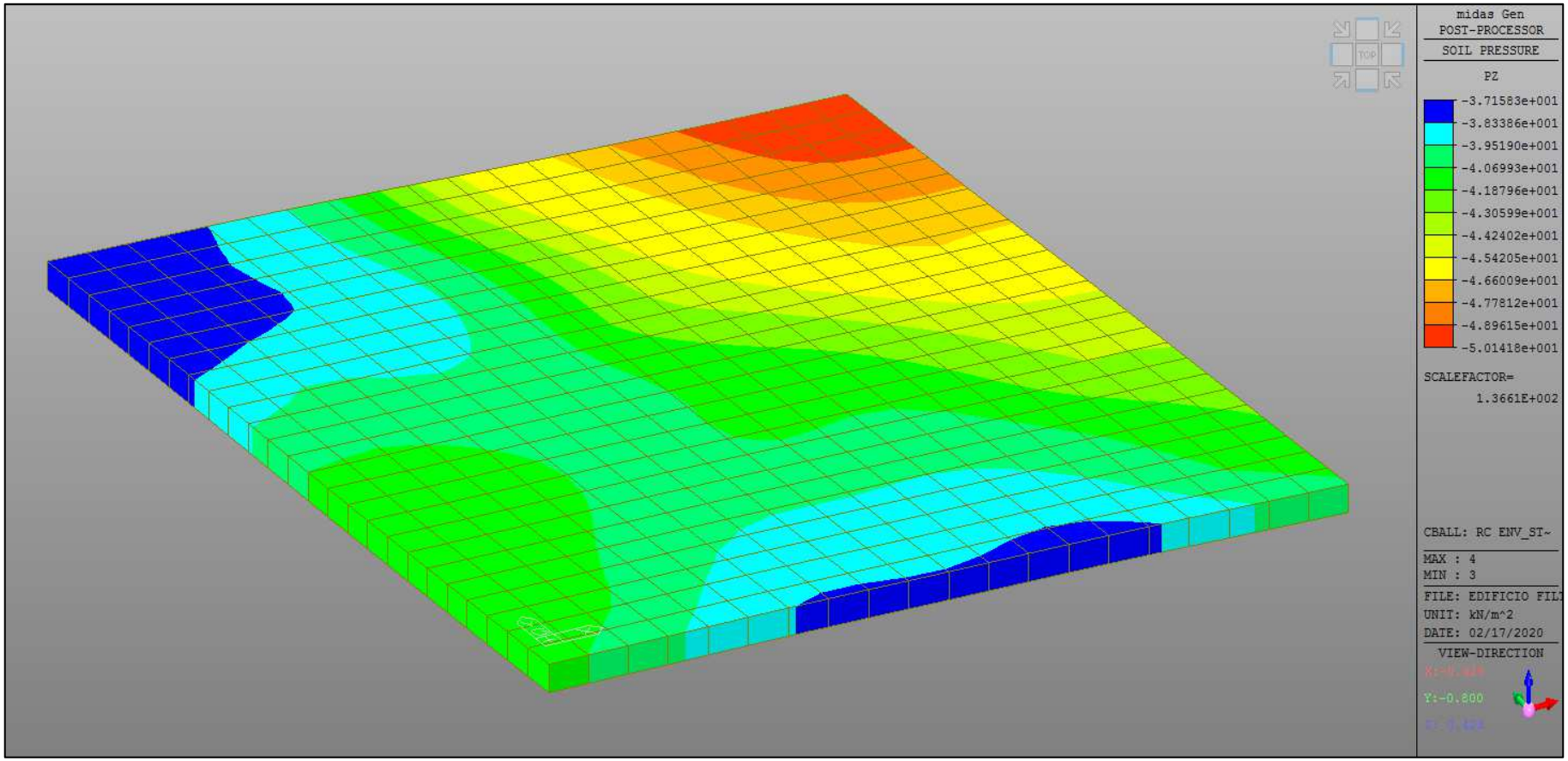

DEFORMATA STRUTTURA GLOBALE IN CONDIZIONI SISMICHE

SISMA PRINCIPALE IN DIREZIONE X

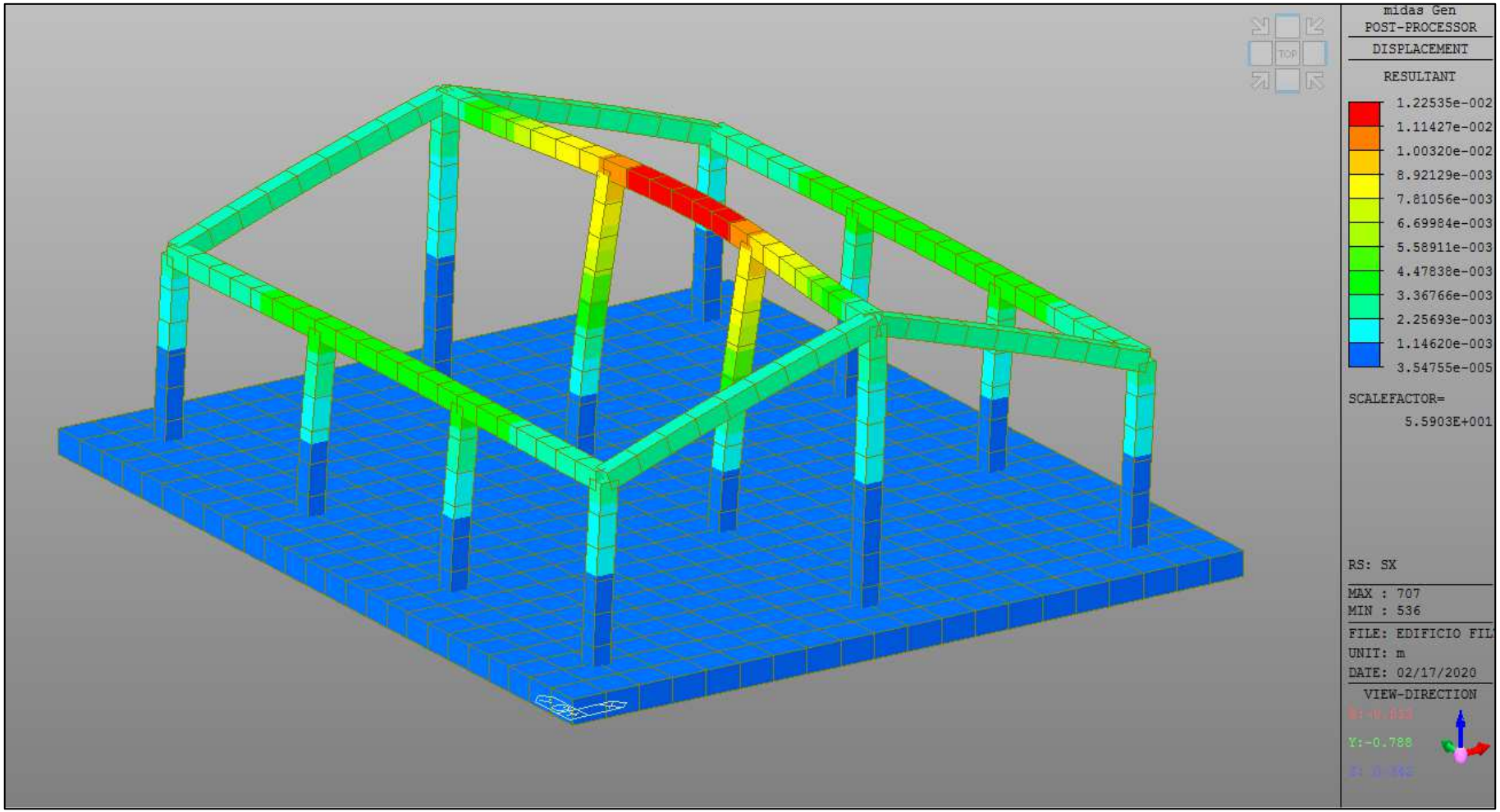

SISMA PRINCIPALE IN DIREZIONE Y

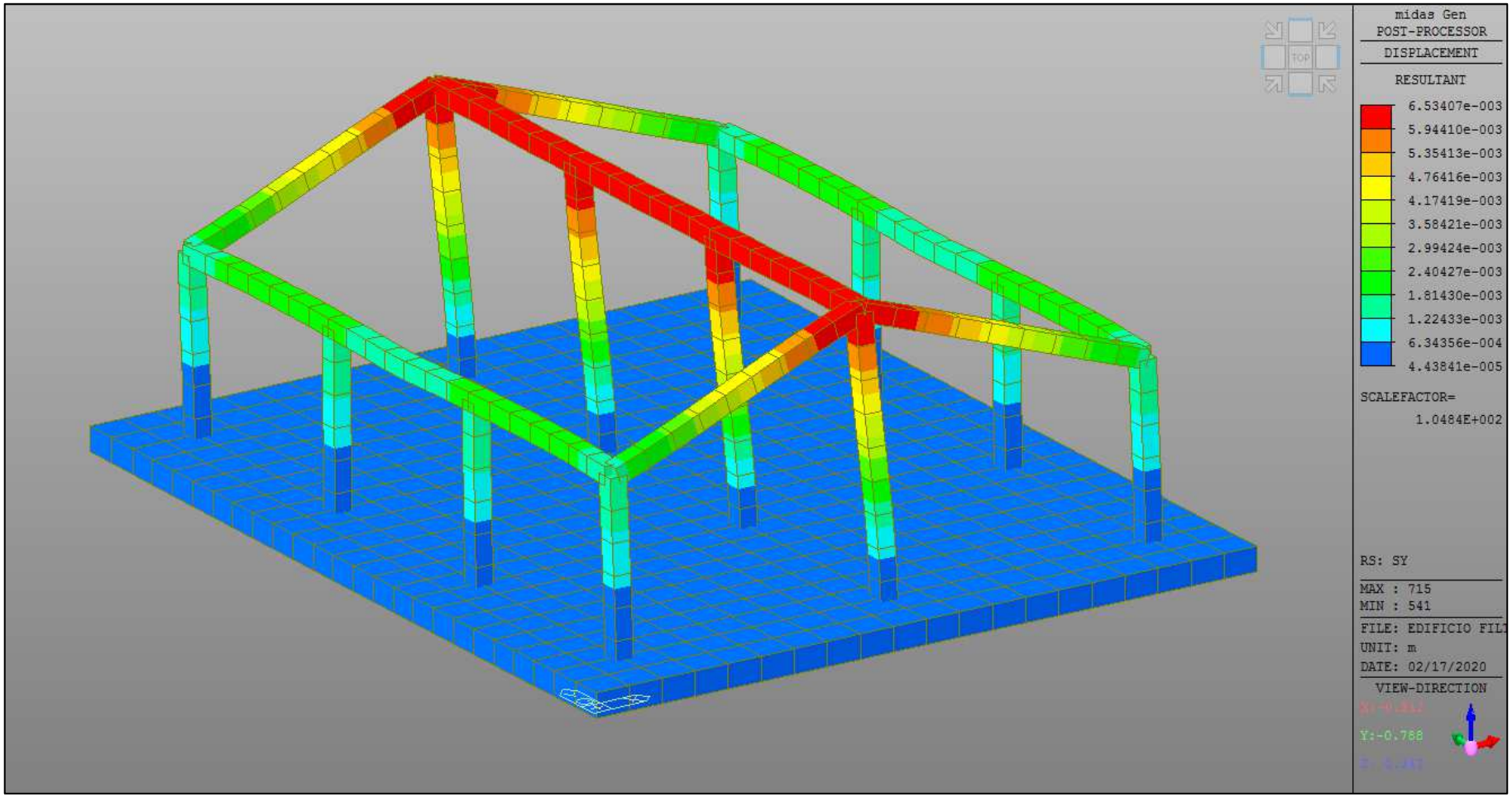

Le deformazioni massime in condizioni sismiche risultano pari a circa 1,2 cm in direzione X e a 6 mm in direzione Y. Tali deformazioni massime, agendo simmetricamente, sono da considerarsi equivalenti in direzione positiva (+ X / + Y) e negativa (- X / -Y).

MOMENTO FLETTENTE A SLU – PILASTRI E CORDOLI

INVILUPPO COMBINAZIONE FONDAMENTALE E SISMICA

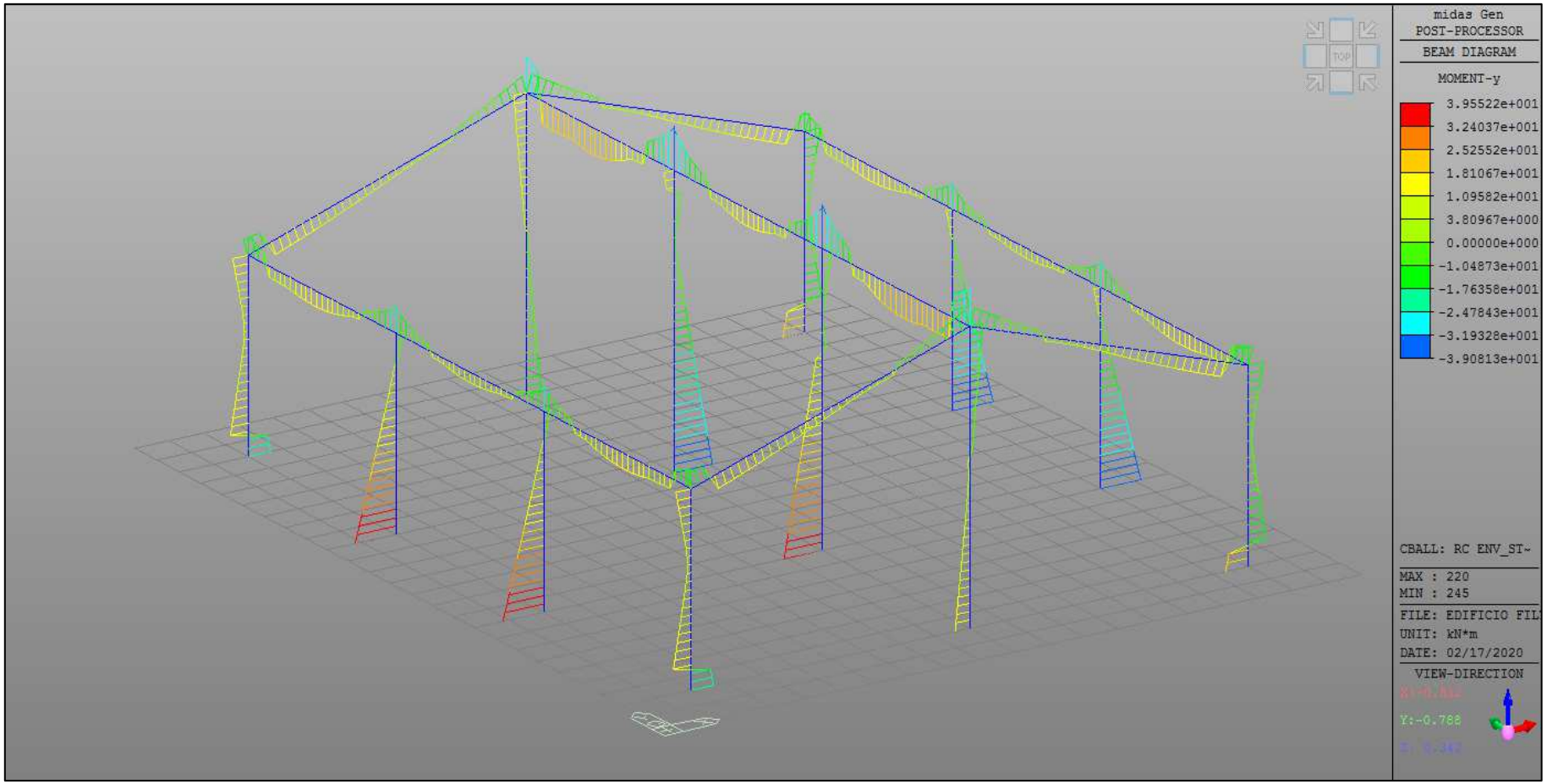

MOMENTO FLETTENTE A SLU – PILASTRI E CORDOLI

INVILUPPO COMBINAZIONE FONDAMENTALE E SISMICA

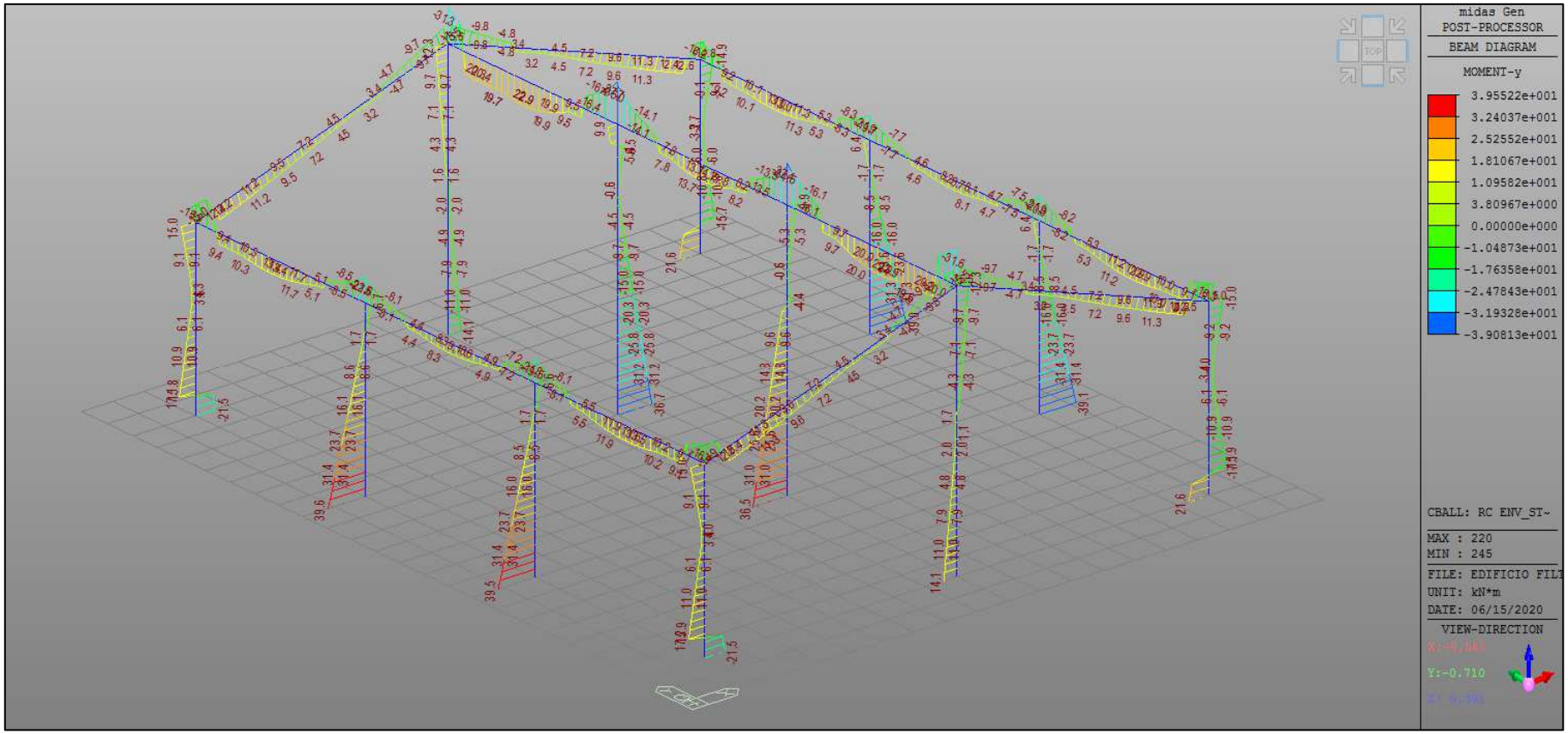

MOMENTO FLETTENTE A SLU – PLATEA DI FONDAZIONE

INVILUPPO COMBINAZIONE FONDAMENTALE E SISMICA

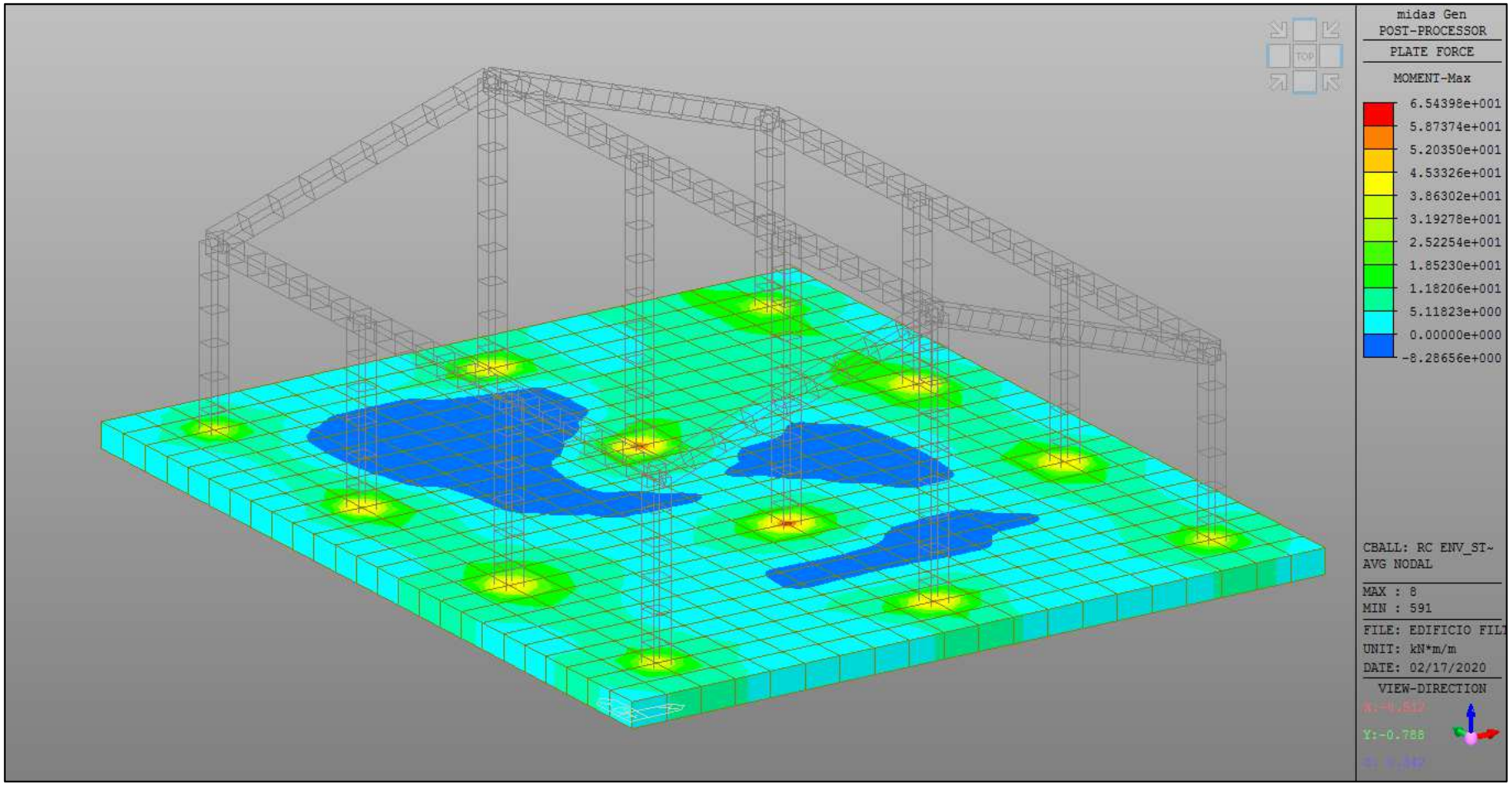

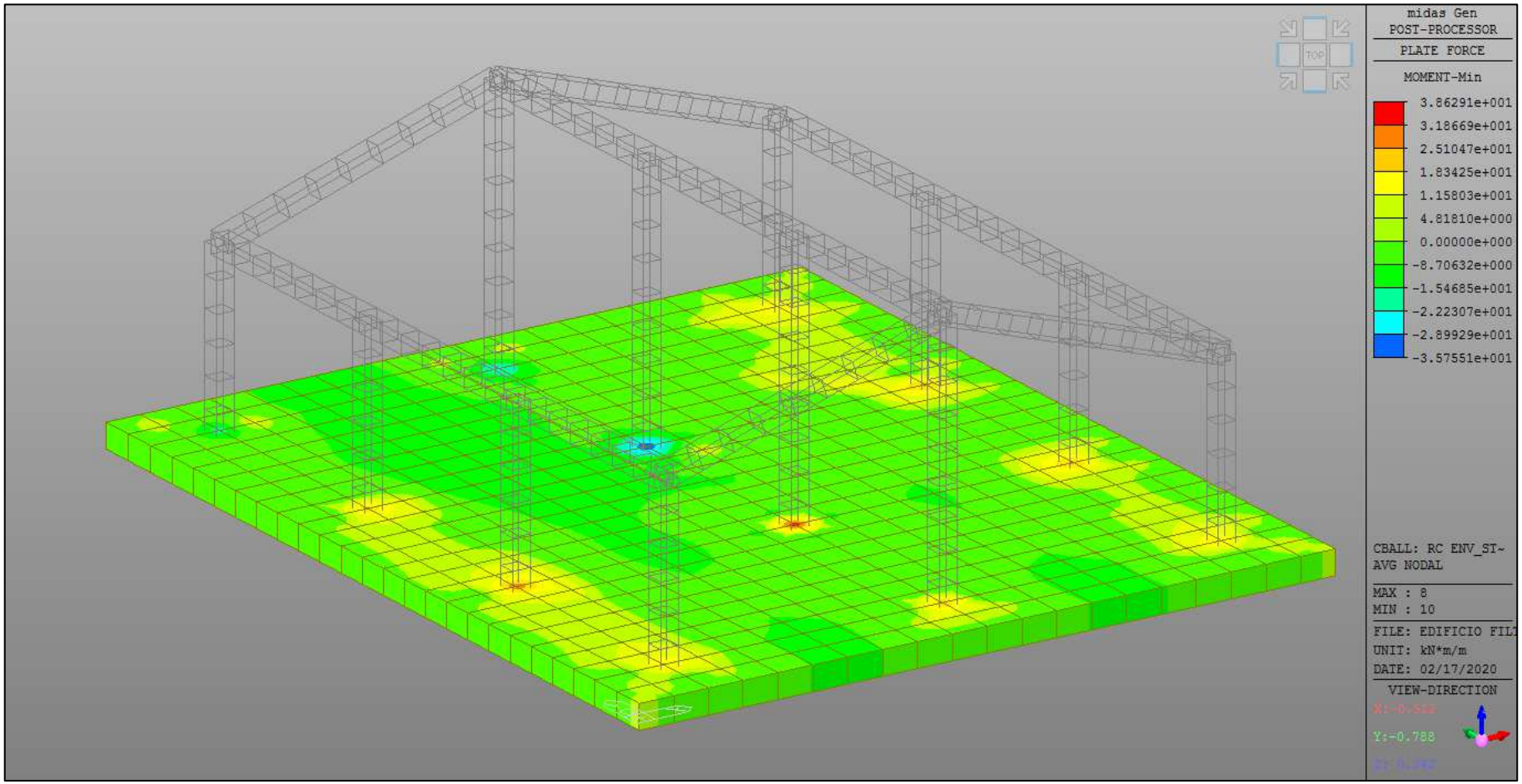
midas Gen
POST-PROCESSOR
PLATE FORCE
MOMENT-Min
3.86291e+001
3.18669e+001
2.51047e+001
1.83425e+001
1.15803e+001
4.81810e+000
0.00000e+000
-8.70632e+000
-1.54685e+001
-2.22307e+001
-2.89929e+001
-3.57551e+001
CBALL: RC ENV_ST~
AVG NODAL
MAX : 8
MIN : 10
FILE: EDIFICIO FIL
UNIT: kN*m/m
DATE: 02/17/2020
VIEW-DIRECTION
Y:-0.788

MOMENTO FLETTENTE A SLE – PLATEA DI FONDAZIONE

COMBINAZIONE CARATTERISTICA (RARA)

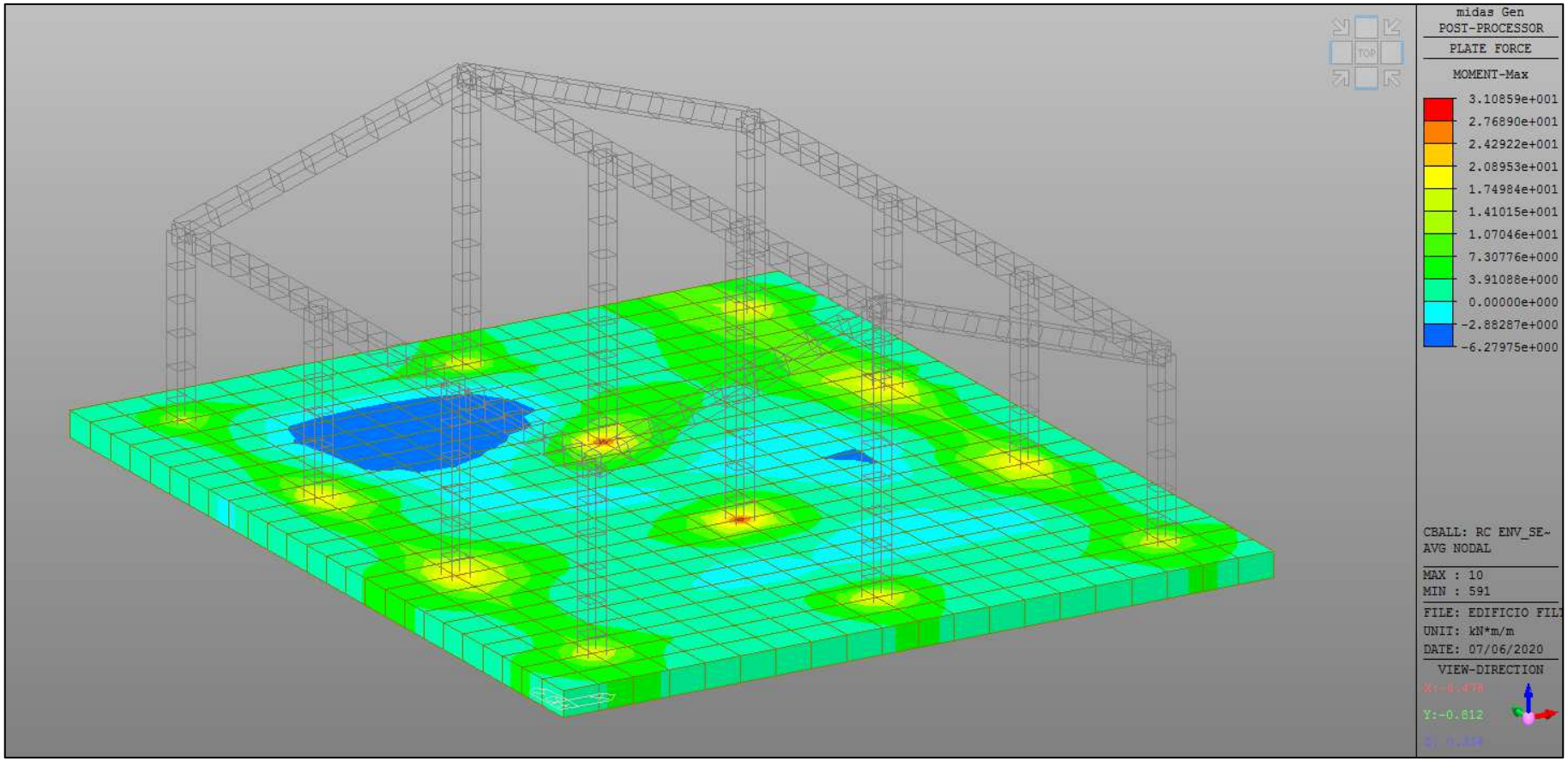

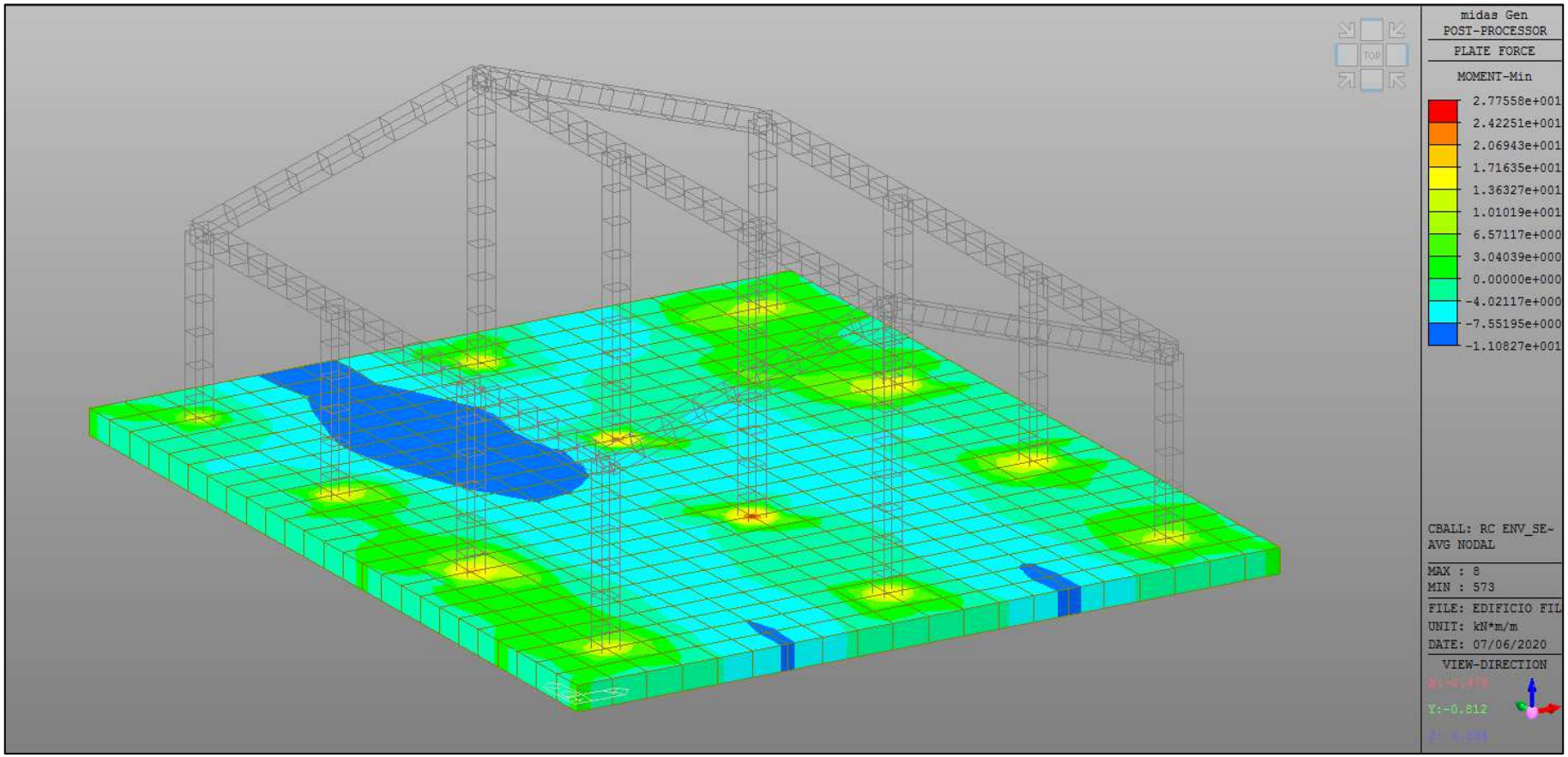
midas Gen
POST-PROCESSOR
PLATE FORCE
MOMENT-Min
2.77558e+001
2.42251e+001
2.06943e+001
1.71635e+001
1.36327e+001
1.01019e+001
6.57117e+000
3.04039e+000
0.00000e+000
-4.02117e+000
-7.55195e+000
-1.10827e+001
CBALL: RC ENV_SE~
AVG NODAL
MAX : 8
MIN : 573
FILE: EDIFICIO FIL
UNIT: kN*m/m
DATE: 07/06/2020
VIEW-DIRECTION
Y:-0.812

MOMENTO FLETTENTE A SLE – PLATEA DI FONDAZIONE

COMBINAZIONE FREQUENTE

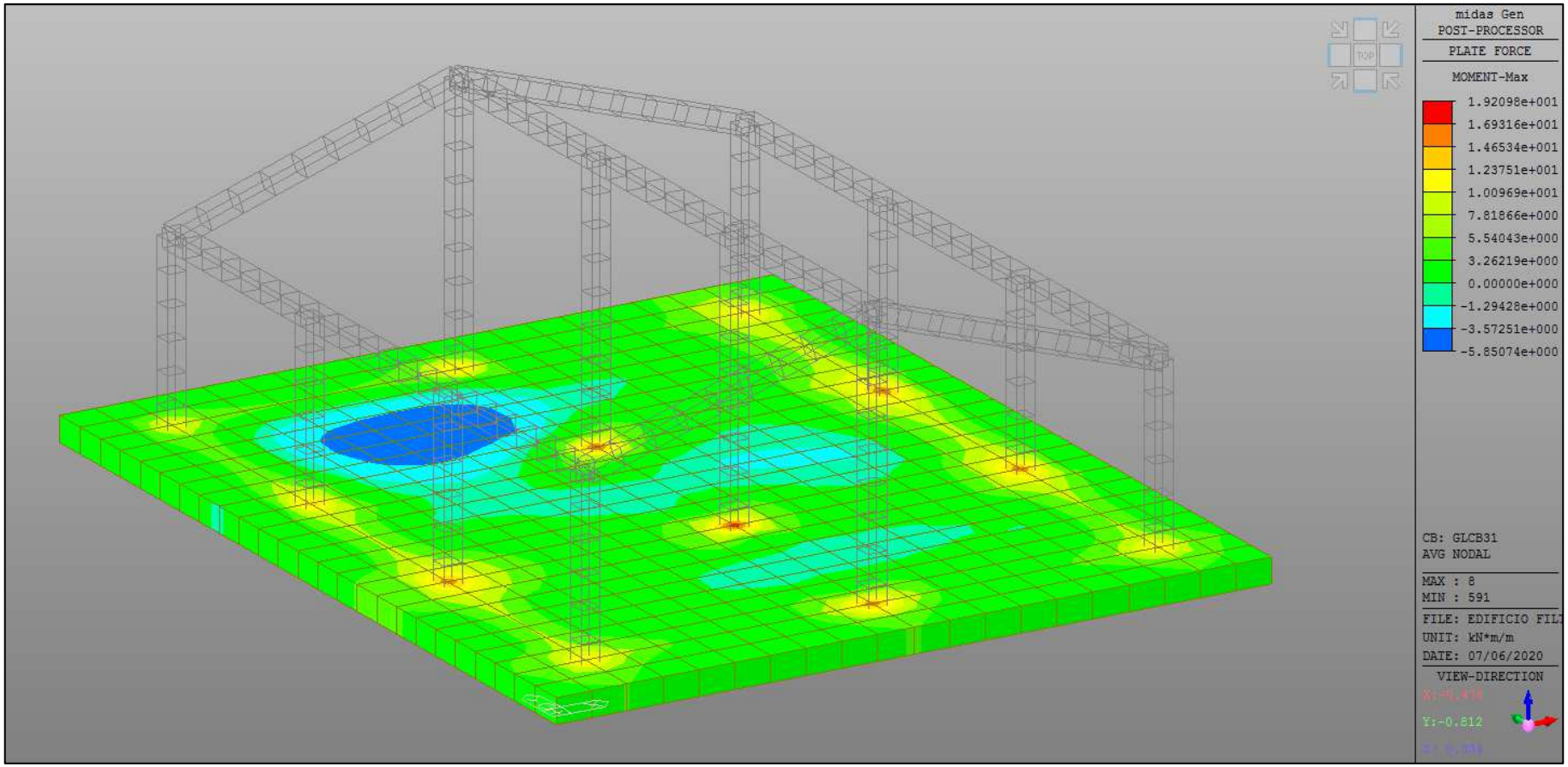

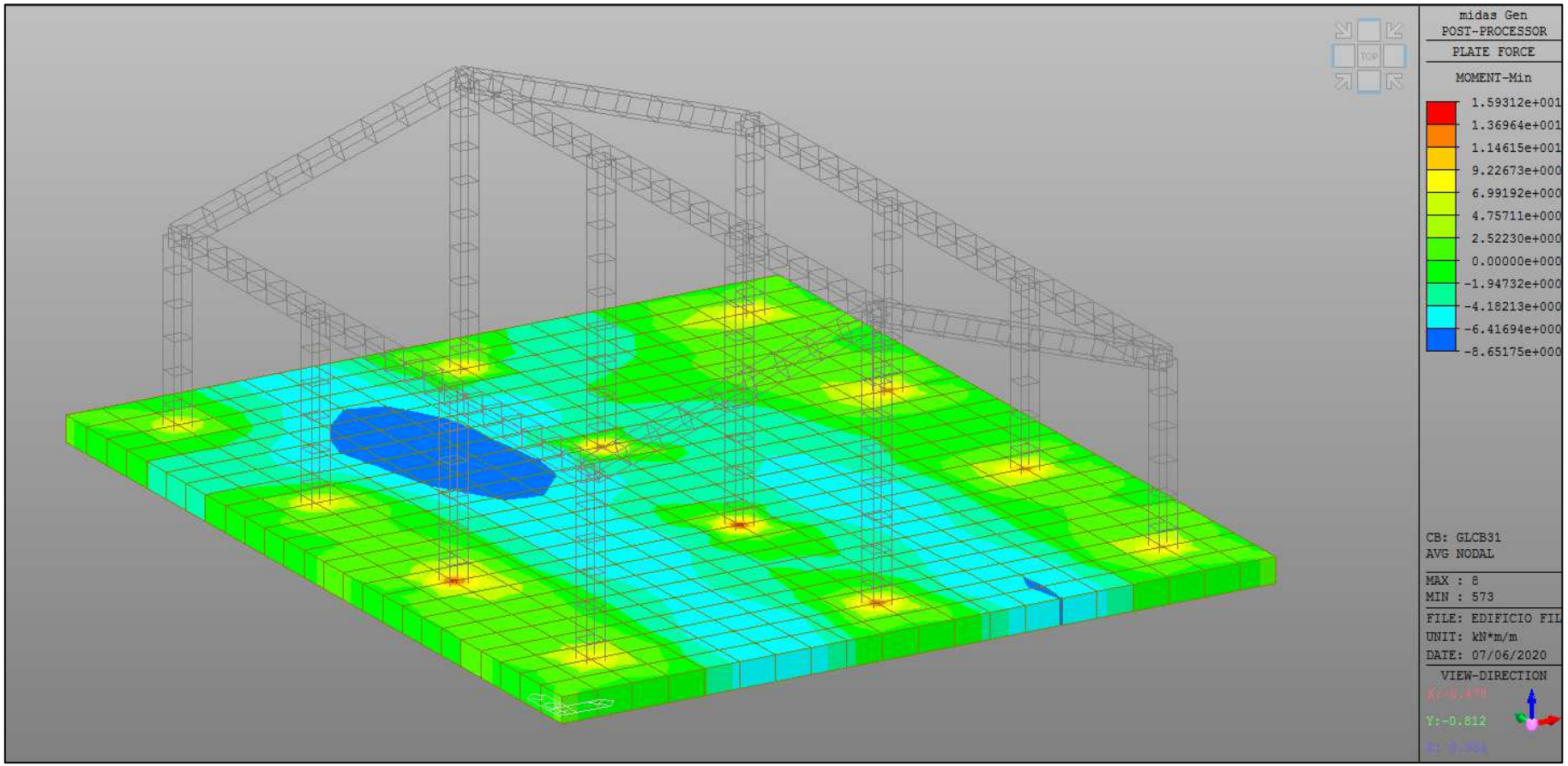
midas Gen
POST-PROCESSOR
PLATE FORCE
MOMENT-Min
1.59312e+001
1.36964e+001
1.14615e+001
9.22673e+000
6.99192e+000
4.75711e+000
2.52230e+000
0.00000e+000
-1.94732e+000
-4.18213e+000
-6.41694e+000
-8.65175e+000
CB: GLCB31
AVG NODAL
MAX : 8
MIN : 573
FILE: EDIFICIO FIL
UNIT: kN*m/m
DATE: 07/06/2020
VIEW-DIRECTION
Y:-0.812

MOMENTO FLETTENTE A SLE – PLATEA DI FONDAZIONE

COMBINAZIONE QUASI PERMANENTE

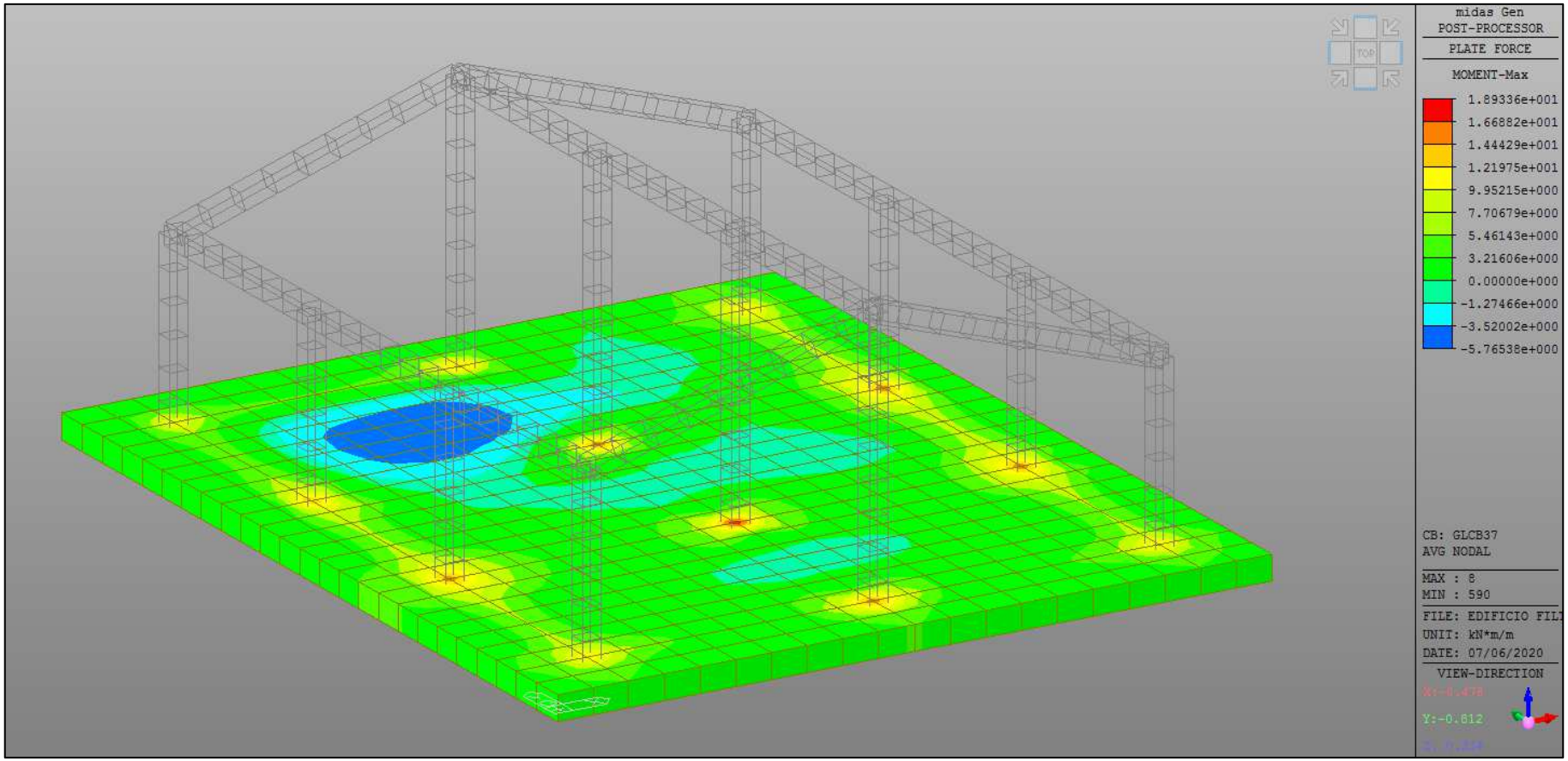

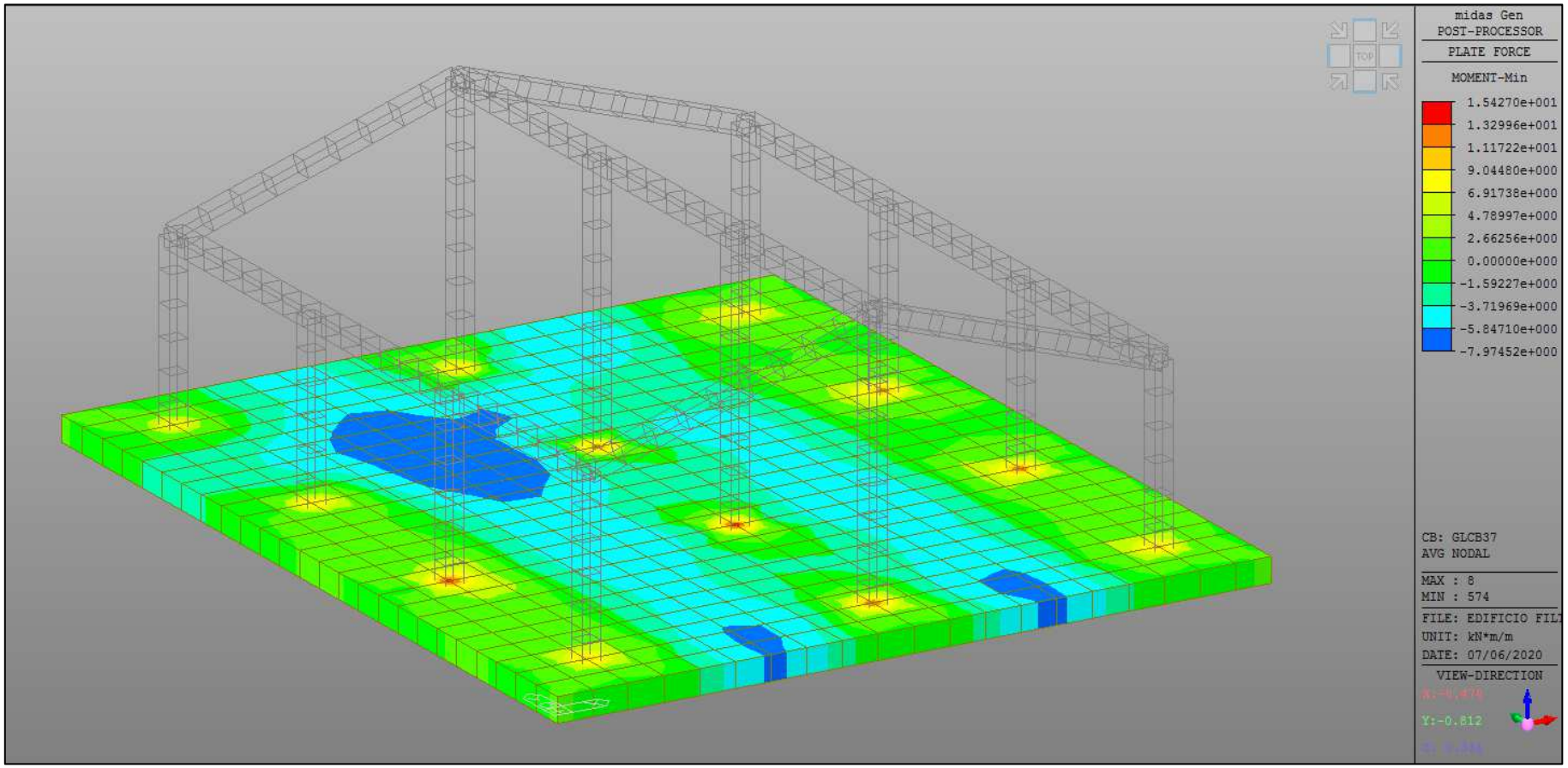
midas Gen
POST-PROCESSOR
PLATE FORCE
MOMENT-Min
1.54270e+001
1.32996e+001
1.11722e+001
9.04480e+000
6.91738e+000
4.78997e+000
2.66256e+000
0.00000e+000
-1.59227e+000
-3.71969e+000
-5.84710e+000
-7.97452e+000
CB: GLCB37
AVG NODAL
MAX : 8
MIN : 574
FILE: EDIFICIO FIL
UNIT: kN*m/m
DATE: 07/06/2020
VIEW-DIRECTION
Y:-0.812

MOMENTO FLETTENTE A SLE – PILASTRI E CORDOLI

COMBINAZIONE CARATTERISTICA (RARA)

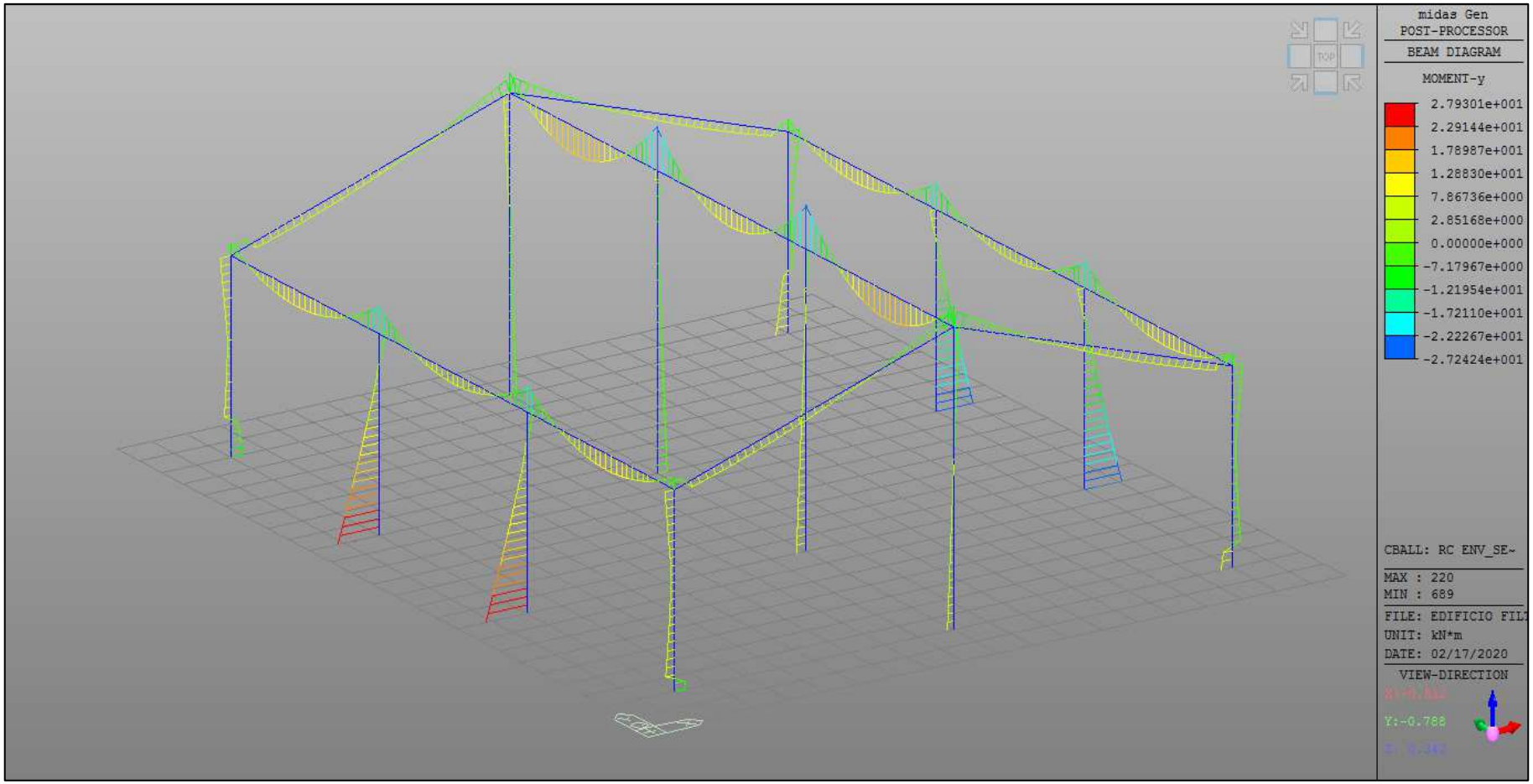

MOMENTO FLETTENTE A SLE – PILASTRI E CORDOLI

COMBINAZIONE CARATTERISTICA (RARA)

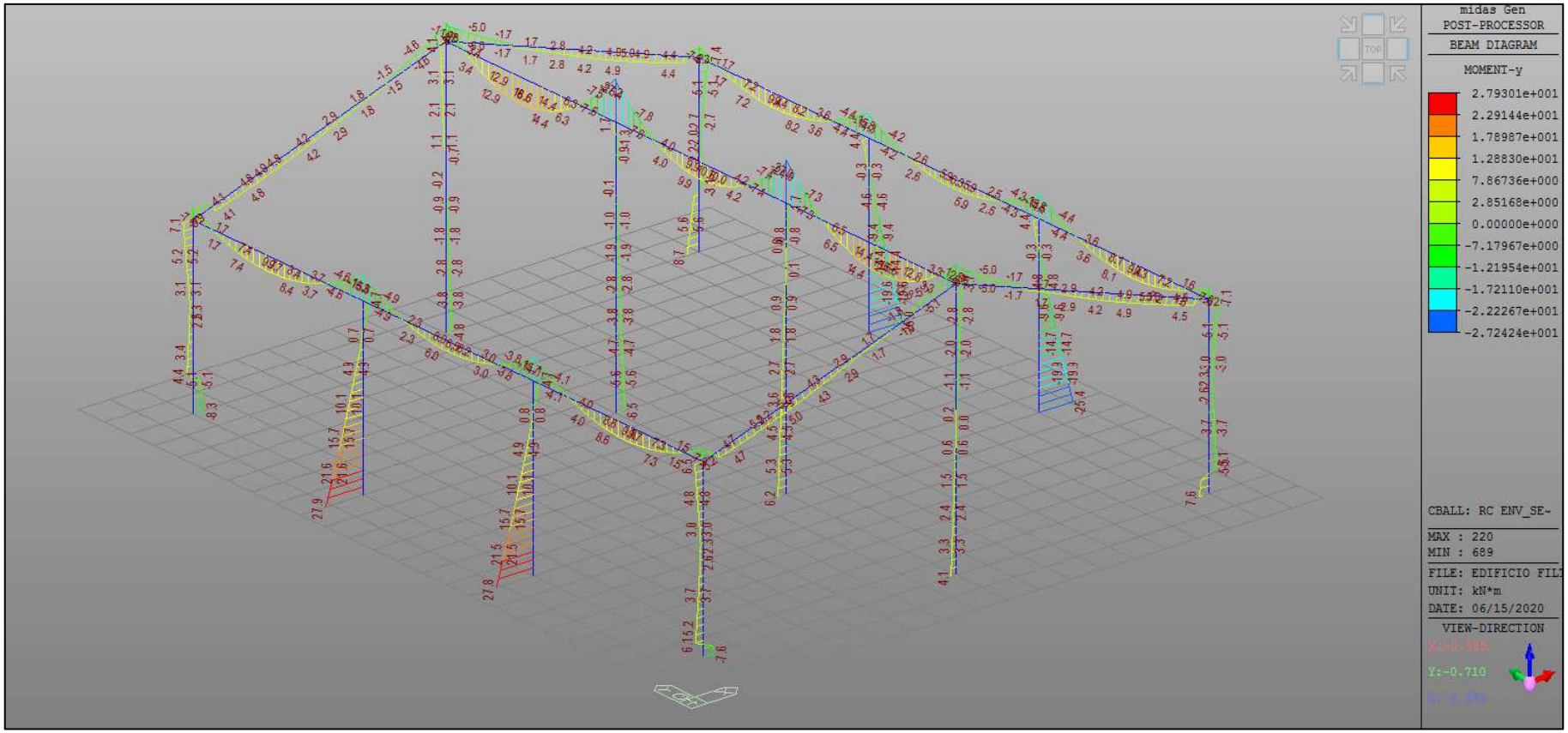

MOMENTO FLETTENTE A SLE – PILASTRI E CORDOLI

COMBINAZIONE FREQUENTE

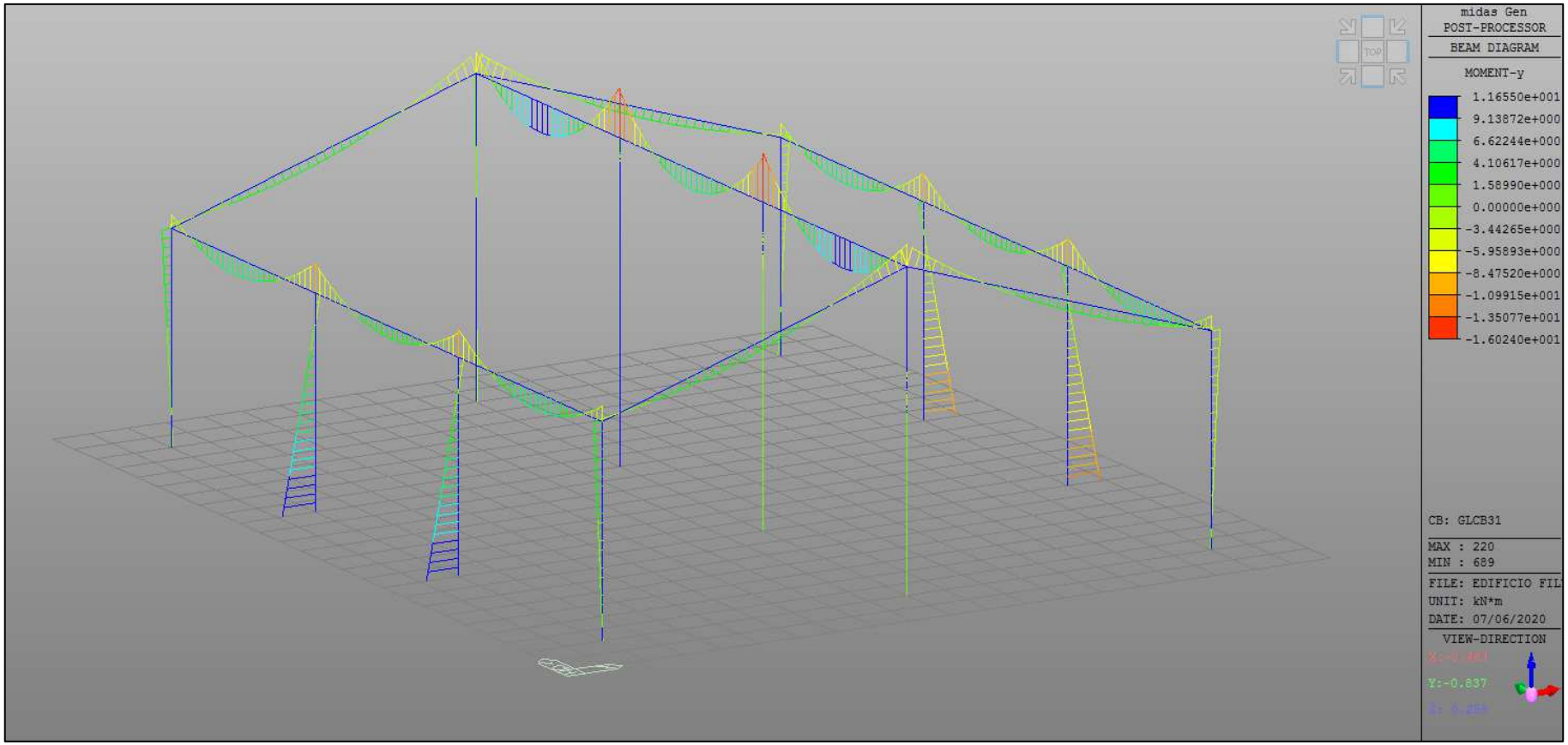

MOMENTO FLETTENTE A SLE – PILASTRI E CORDOLI

COMBINAZIONE QUASI PERMANENTE

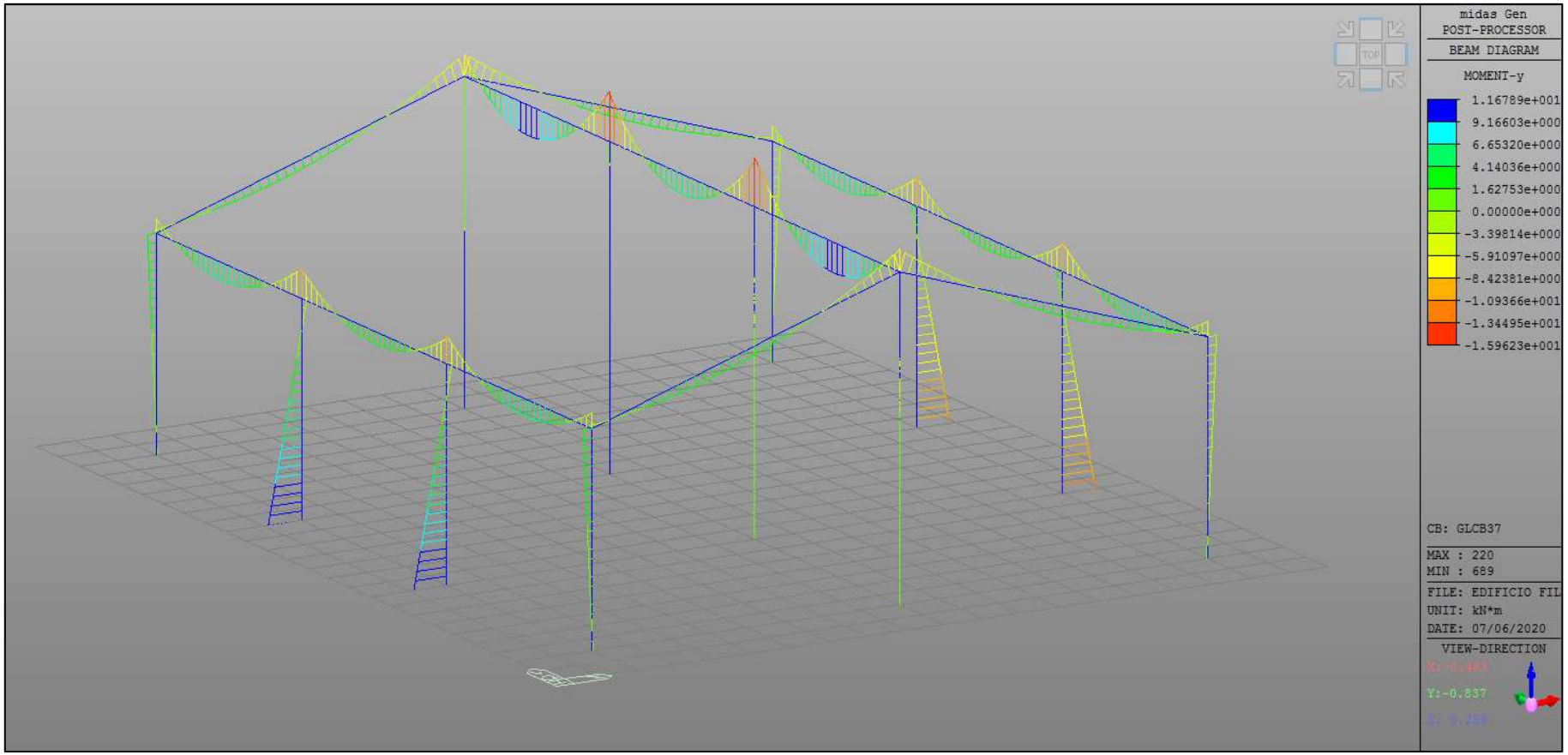

TAGLIO A SLU – PILASTRI E CORDOLI

INVILUPPO COMBINAZIONE FONDAMENTALE E SISMICA

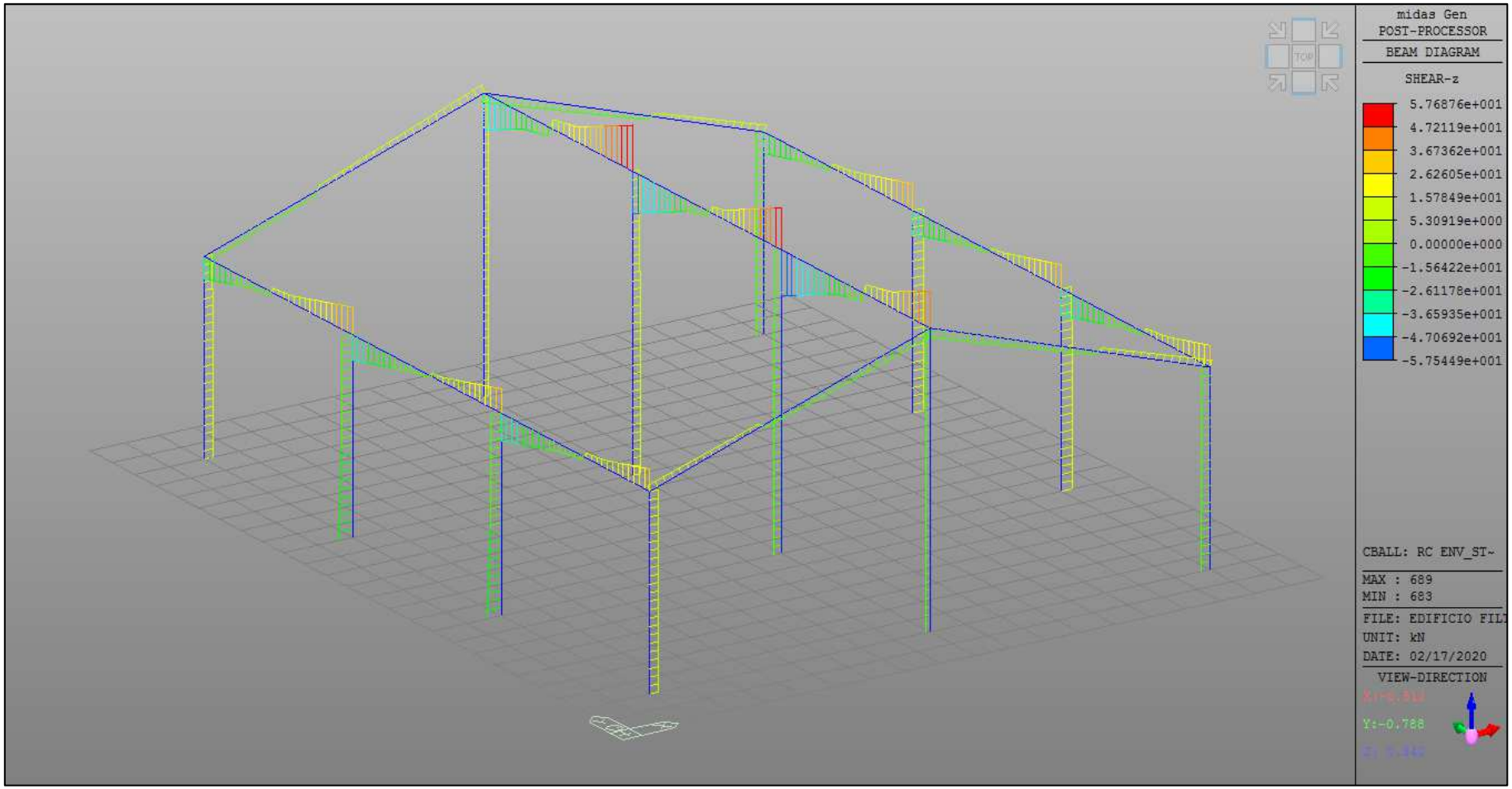

TAGLIO A SLU – PILASTRI E CORDOLI

INVILUPPO COMBINAZIONE FONDAMENTALE E SISMICA

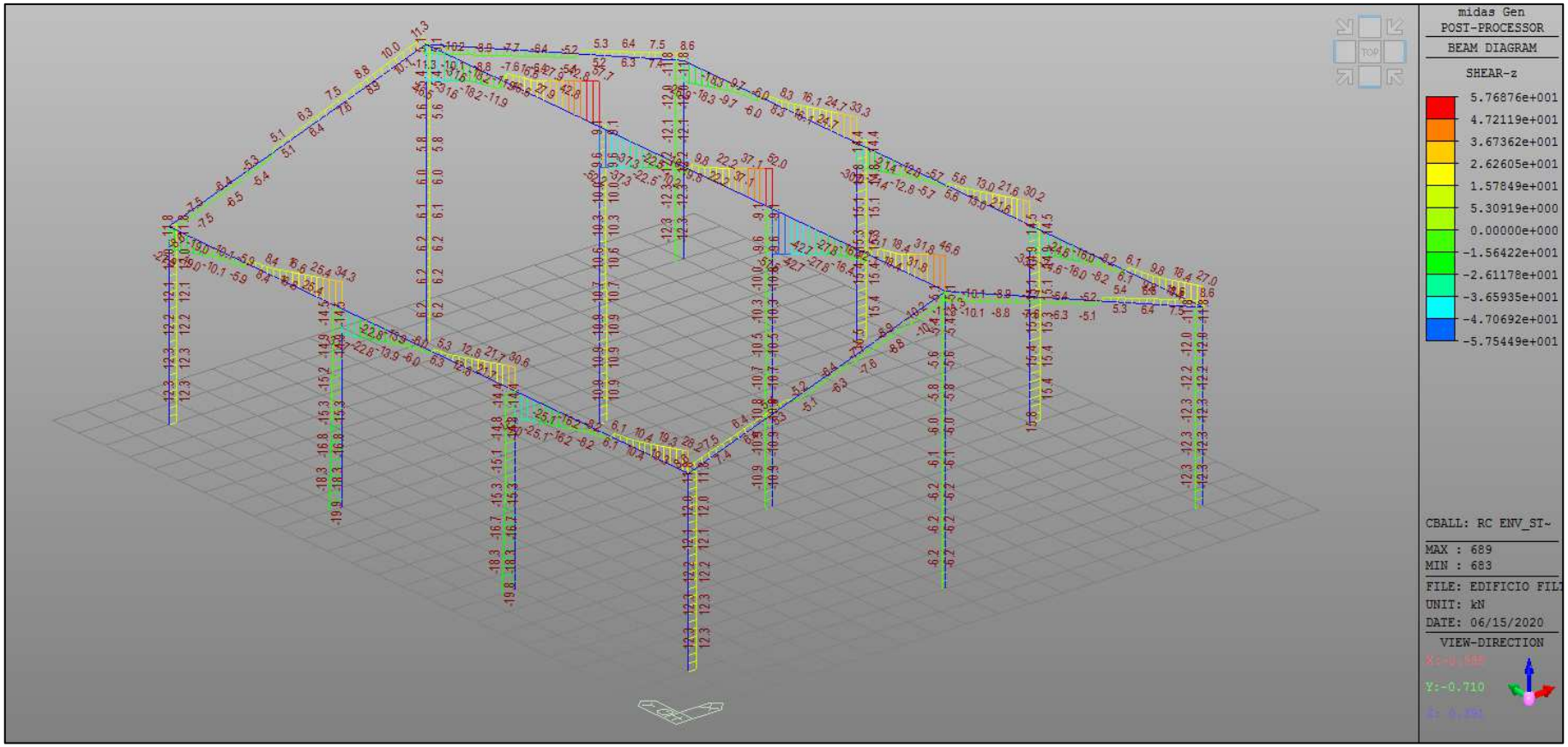

TAGLIO A SLU – PLATEA DI FONDAZIONE

INVILUPPO COMBINAZIONE FONDAMENTALE E SISMICA

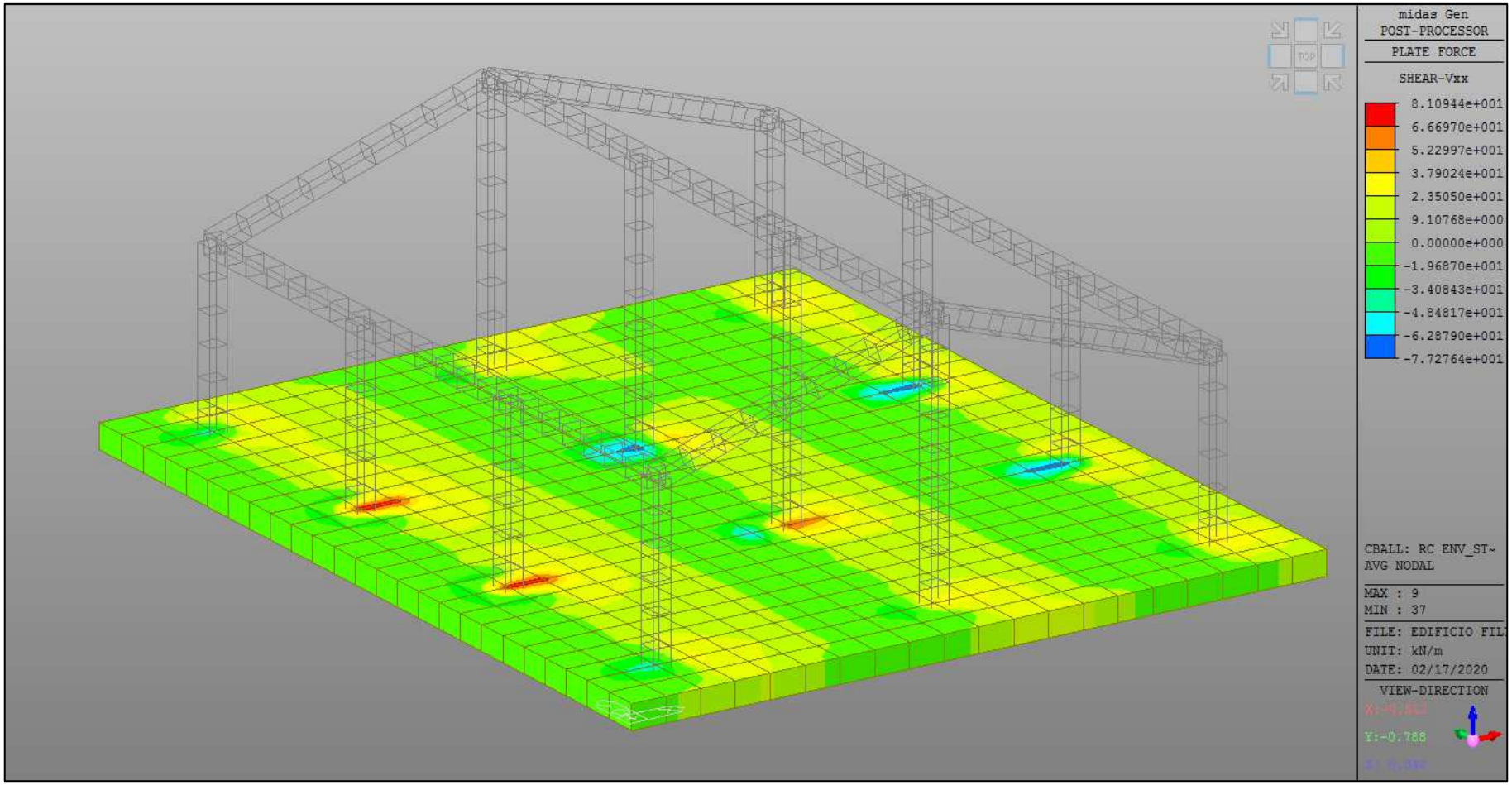

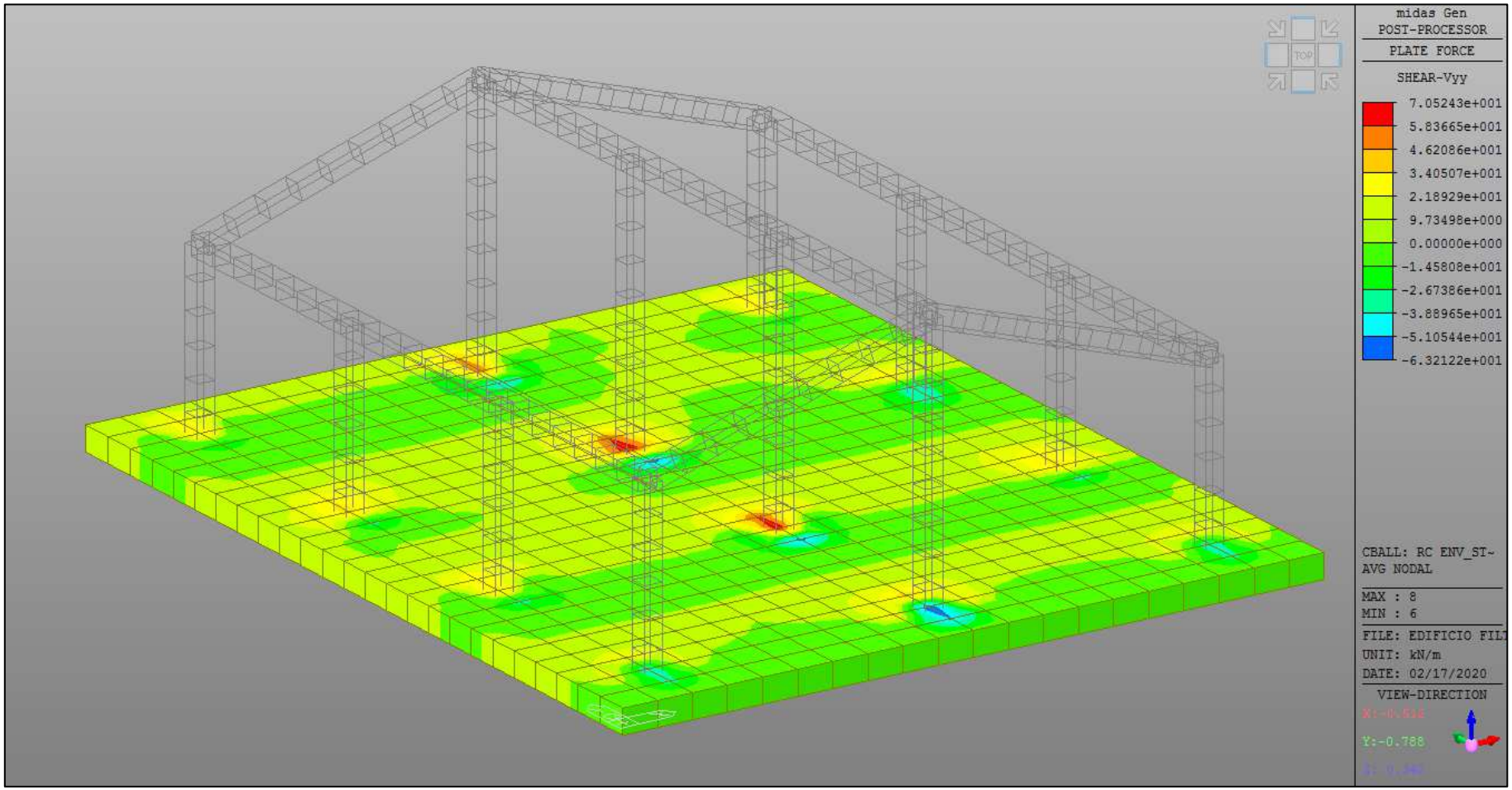
midas Gen
POST-PROCESSOR
PLATE FORCE
SHEAR-Vyy
7.05243e+001
5.83665e+001
4.62086e+001
3.40507e+001
2.18929e+001
9.73498e+000
0.00000e+000
-1.45808e+001
-2.67386e+001
-3.88965e+001
-5.10544e+001
-6.32122e+001
CBALL: RC ENV_ST~
AVG NODAL
MAX : 8
MIN : 6
FILE: EDIFICIO FIL
UNIT: kN/m
DATE: 02/17/2020
VIEW-DIRECTION
Y:-0.788

SFORZO NORMALE A SLU – PILASTRI E CORDOLI

INVILUPPO COMBINAZIONE FONDAMENTALE E SISMICA

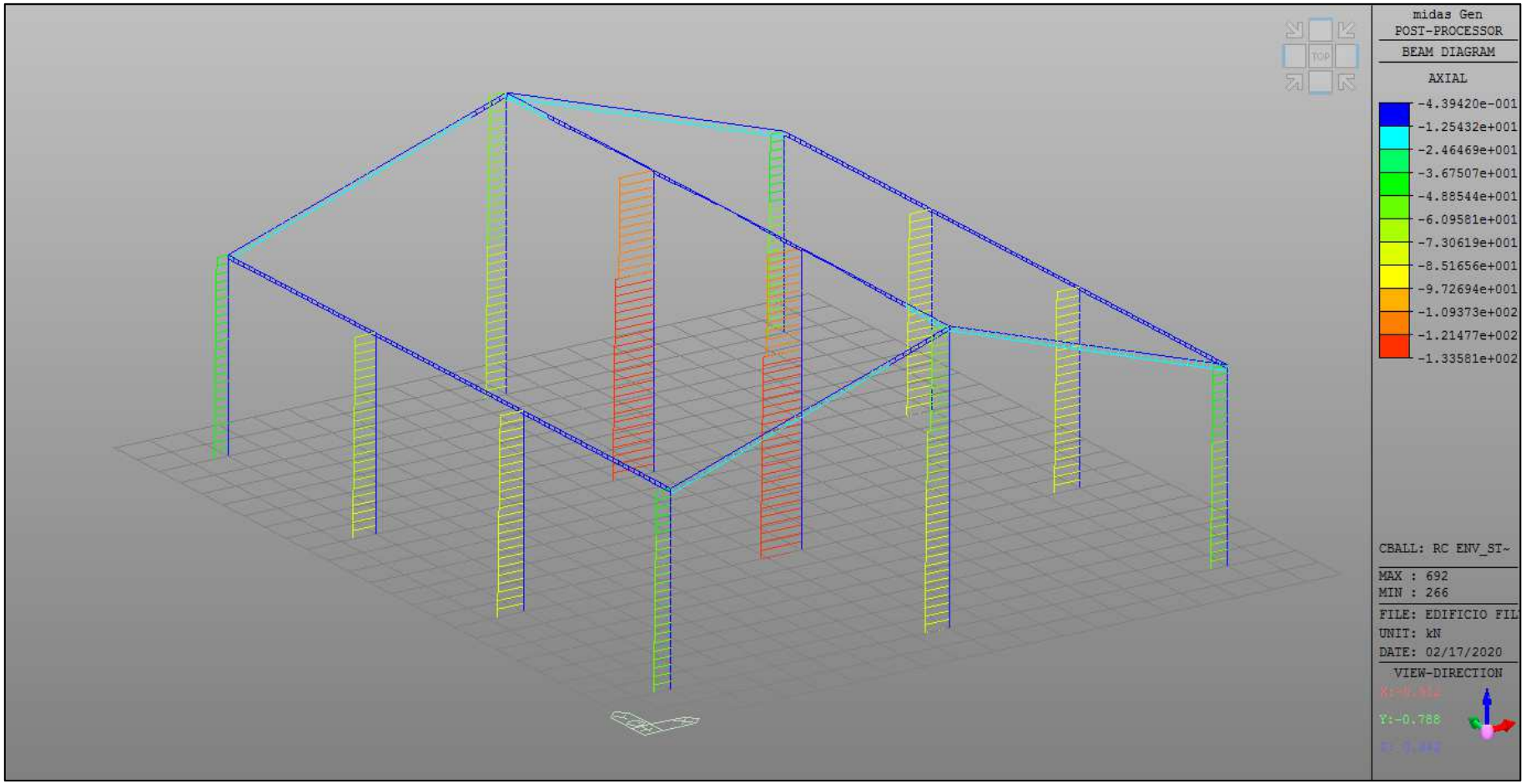

SFORZO NORMALE A SLU – PILASTRI E CORDOLI

INVILUPPO COMBINAZIONE FONDAMENTALE E SISMICA

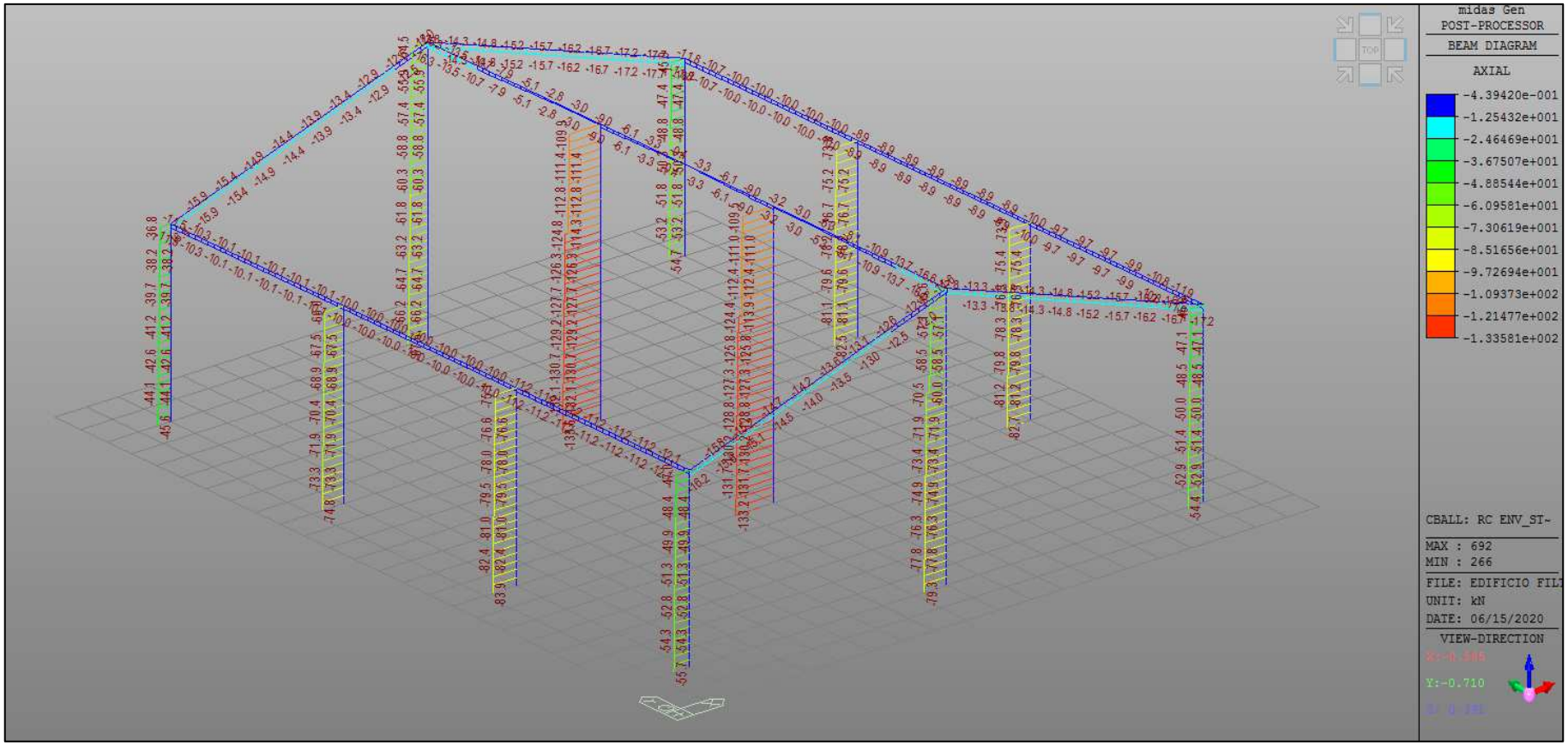

8.1.3 Verifiche strutturali

Di seguito vengono, quindi, riportate le verifiche a SLU e a SLE secondo N.T.C. degli elementi strutturali maggiormente sollecitati e relativi a:

- platea di fondazione h 40 cm x 100 cm;
- pilastri dim. cm 30x30;
- cordoli dim. cm 30x30.

In **allegato 1** alla presente relazione sono, inoltre, riportati i tabulati di calcolo del codice agli elementi finiti, comprensivi dei dati di input, di analisi modale e di output, con il dettaglio delle sollecitazioni per le combinazioni di carico previste dalle N.T.C..

VERIFICHE STRUTTURALI PLATEA DI FONDAZIONE

DATI

Altezza sezione	h	0.40	m
Larghezza sezione	b	1.00	m
Classe di esposizione ambientale		XC2	/
Copriferro minimo	c_{min}	40	mm
Distanza del baricentro delle armature longitudinali dalla superficie di calcestruzzo più vicina	d'	0.04	m
Interasse minimo tra le armature	i_{min}	40	mm
Altezza utile	d	0.36	m
Deformazione della sezione di calcestruzzo compresso (Ipotesi di mantenimeto delle sezioni piane e aderenza a rottura continua)	$\varepsilon_c=\varepsilon_{cu}$	-0.0035	/
Coefficiente di riempimento (per ε_c=3,5‰)	β_1	0.810	/
Coefficiente di posizione (per ε_c=3,5‰)	β_2	0.416	/
Momento sollecitante SLU	M_{sd}	65.0	kNm
Taglio agente	V_{sd}	81.0	kN
Momento sollecitante condizioni di carico quasi permanente SLE	$M_{sd,QP}$	19.0	kNm
Momento sollecitante condizioni di carico rara SLE	$M_{sd,rara}$	31.0	kNm

MATERIALI

Conglomerato cementizio a prestazione garantita conforme alla EN 206-1 e alla UNI EN 11104			
Resistenza caratteristica cubica a compressione a 28 giorni	R_{ck}	30.0	N/mm^2
Resistenza caratteristica cilindrica a compressione a 28 giorni	f_{ck}	25.0	N/mm^2
Resistenza media cilindrica a compressione	f_{cm}	33.0	N/mm^2
Modulo elastico	E_{cm}	31476	N/mm^2
Modulo elastico di calcolo	E_{cd}	26230	N/mm^2
Coeff. di Poisson calcestruzzo non fessurato	ν	0.2	
Coeff. di Poisson calcestruzzo fessurato	ν	0	
Situazione di progetto persistente			
Coefficiente parziale di sicurezza	γ_c	1.5	
Coefficiente per le resistenze di lunga durata	α_{cc}	0.85	
Resistenza di calcolo a compressione	f_{cd}	14.2	N/mm^2
Resistenza di calcolo a compressione	f_{cd}	14167	kN/m^2
Resistenza media a trazione assiale	f_{ctm}	2.56	N/mm^2
Valore medio della resistenza a trazione per flessione	f_{cfm}	3.08	N/mm^2
	$f_{ctk,0,05}$	1.80	N/mm^2
Resistenza di calcolo a trazione	f_{ctd}	1.20	N/mm^2
Resistenza di calcolo a trazione	f_{ctd}	1196983	N/m^2
Situazione di progetto eccezionale e sismica			
Coefficiente parziale di sicurezza	γ_c	1	
Resistenza di calcolo a compressione	f_{cd}	25.0	N/mm^2
Resistenza di calcolo a compressione	f_{cd}	25000000	N/m^2
Acciaio B450C conforme alla UNI EN ISO 9001:2000 e UNI EN ISO 15630-1:			
Tensione caratteristica di rottura	f_{tk}	540	N/mm^2
Tensione caratteristica di rottura	f_{tk}	540000	kN/m^2
Tensione caratteristica di snervamento	f_{yk}	450	N/mm^2
Tensione caratteristica di snervamento	f_{yk}	450000	kN/m^2
Modulo elastico	E_s	210000	N/mm^2
Situazione di progetto persistente			
Coefficiente parziale di sicurezza	γ_s	1.15	
Resistenza di calcolo	f_{yd}	391	N/mm^2
Resistenza di calcolo	f_{yd}	391000	kN/m^2
Situazione di progetto eccezionale e sismica			
Coefficiente parziale di sicurezza	γ_s	1	
Resistenza di calcolo	f_{yd}	450	N/mm^2
Resistenza di calcolo	f_{yd}	450000	kN/m^2

DIMENSIONAMENTO ARMATURE LONGITUDINALI

Risultante delle forze di compressione	C	184.0	kN
Profondità dell'asse neutro	x	0.016	m
Momento resistente	M_{Rd}	65.0	kN
Profondità dell'asse neutro (il valore deve essere < 0,45 per avere rottura duttile nell'acciaio)	ξ=x/d	0.045	/
Area minima da normativa	A_{min}	540	mm^2
Area minima richiesta	$A_{s,req}$	470	mm^2
Area di calcolo	A_{max}	540	mm^2
Diametro ferri disposti in zona tesa - strato 1	$\varnothing_1$	14	mm
n° di ferri disposti in zona tesa - strato 1	n_1	6	/
Diametro ferri disposti in zona tesa - strato 2	$\varnothing_1$	0	mm
n° di ferri disposti in zona tesa - strato 2	n_1	0	/
Area delle armature in zona tesa	A_s	924	mm^2
Diametro ferri disposti in zona compressa - strato 1	$\varnothing_2$	14	mm
n° di ferri disposti zona in compressa - strato 1	n_1	6	/
Diametro ferri disposti in zona compressa - strato 2	$\varnothing_2$	0	mm
n° di ferri disposti in zona compressa - strato 2	n_1	0	/
Area delle armature in zona compressa	A'_s	924	mm^2
Scarto	$(M_{Rd} - M_{sd})^2$	0	/
VERIFICA A FLESSIONE			
Area delle armature in zona tesa	A_s	924	mm^2
Area delle armature in zona compressa	A'_s	924	mm^2
Profondità dell'asse neutro	x	37	mm
Deformazione calcestruzzo (zona compressa)	ε_c	-0.0035	/
Deformazione acciaio disposto in zona tesa	ε_s	0.0306	/
Deformazione acciaio disposto in zona compressa	ε'_s	0.0002941	/
Tensione agente nella zona compressa di calcestruzzo	σ_c	14.2	N/mm^2
Tensione agente sull'armatura tesa	σ_s	391	N/mm^2
Tensione agente sull'armatura compressa	σ'_s	62	N/mm^2
Risultante di compressione nel calcestruzzo	C	-418189	N
Risultante di trazione sull'armatura tesa	S	361139	N
Risultante di compressione sull'armatura compressa	S'	57051	N
Bilancio	C+S+S'	0	N
Profondità asse neutro	x/d	0.102	/
Momento resistente	M_{Rd}	126.1	kNm
Momento sollecitante	M_{sd}	65.0	kNm
VERIFICA A FLESSIONE	$M_{Rd} > M_{sd}$	VERIFICATO	
VERIFICA DUTTILITA'	x/d < 0.45	VERIFICATO	

VERIFICA AL TAGLIO CON ARMATURA SPECIFICA

Inclinazione staffe	α	90	gradi
Inclinazione staffe	α	1.57	radianti
	Cotgα	0.0	radianti
Diametro ferri	Φ	10	mm
Area del ferro	A	78.5	mm^2
Numero bracci	n	2	/
Passo armatura al taglio	s	40	cm
Il valore di Cotgθ deve essere compreso tra: $1 \leq Cotg\theta \leq 2,5$ ($21,8° \leq \theta \leq 45°$)	Cotgθ	2.5	radianti
Area armatura a taglio al metro lineare	A_{sw}	471	mm^2
Resistenza di calcolo a "taglio trazione" riferita all'armatura trasversale	V_{Rsd}	373	kN
Resistenza di calcolo a "taglio compressione" riferita al calcestruzzo d'anima	V_{Rcd}	791	kN
Scarto	$V_{Rcd} - V_{Rsd}$	418	kN
Taglio sollecitante	V_{sd}	81.0	kN
VERIFICA A COMPRESSIONE DEL CALCESTRUZZO D'ANIMA	$V_{Rcd} \geq V_{sd}$	VERIFICATO	
VERIFICA A TRAZIONE DELLE ARMATURE TRASVERSALI	$V_{Rsd} \geq V_{sd}$	VERIFICATO	
ARMATURA MINIMA DA NORMATIVA (EC2 Prosp. 5.5)			
Percentuale di armatura minima secondo Eurocodice	ρ_w	0.0013	/
Inclianzione staffe	α	90	gradi
Inclianzione staffe	α	1.57	radianti
Armatura minima (riferita ad un metro quadro di priastra)	A_{sw}/s	1300	mm^2/m
Diametro ferri	Φ	10	mm
Area del ferro	A	78.5	mm^2
Numero bracci	n	2	/
Numero di ferri da disporre in un metro quadro di piastra	$n_{ferri,tot}$	9	/
Numero di ferri da disporre al metro lineare	n_{ferri}	3	/
Passo armatura al taglio	s	33	cm
ARMATURA ADOTTATA			
Area di armatura da disporre al metro lineare	A_{sw}/s	471	mm^2/m
Numero di ferri da disporre in un metro quadro di piastra	$n_{ferri,tot}$	9	/
Numero di ferri da disporre al metro lineare	n_{ferri}	3	/
Passo armatura al taglio	s	33	cm
Diametro armatura	Φ	10	mm
Area armatura	A	79	mm^2

VERIFICA DELLE TENSIONI DI ESERCIZIO

Altezza sezione	h	400	mm
Lerghezza sezione	b	1000	mm
Altezza utile	d	360	mm
Distanza del baricentro delle armature longitudinali dalla superficie di calcestruzzo più vicina	d'	40	mm
Area della sezione di calcestruzzo	A_c	400000	mm^2
Modulo elastico calcestruzzo	E_{cm}	31476	N/mm^2
Modulo elastico acciaio	E_s	210000	N/mm^2
Momento sollecitante condizioni di carico quasi permanente SLE	$M_{sd,QP}$	20000000	Nmm
Momento sollecitante condizioni di carico rara SLE	$M_{sd,rara}$	30000000	Nmm
Perimetro sezione calcestruzzo esposta all'aria (NTC 2018 cap. 11.2.10.6)	u	2800	m
Coefficiente di omogeneizzazione	$n_{(t0)}$	6.67	/
Dimensione fittizia (NTC 2018 par. 11.2.10.7)	h_0	286	mm
Coeff. di viscosità (NTC 2018 tab. 11.2.VI) per umidità relativa 75% e per t_0>60 giorni	$\varphi(\infty,t_0)$	2.05	/
Modulo elastico calcestruzzo effettivo	$E_{c,eff}$	10315	N/mm^2
Coefficiente di omogenizzazione effettivo	n_{eff}	20.36	/
Area delle armature in zona tesa	A_s	924	mm^2
Area delle armature in zona compressa	A'_s	924	mm^2
Massima tensione del calcestruzzo per condizione di carico quasi permanente (NTC 2018 par. 4.1.2.2.5.1)	$\sigma_{c,QP}$	11.25	N/mm^2
Massima tensione del calcestruzzo per condizione di carico rara (NTC 2018 par. 4.1.2.2.5.1)	$\sigma_{c,rara}$	15.00	N/mm^2
Massima tensione sull'acciaio di armatura (NTC 2018 par. 4.1.2.2.5.2)	σ_s	360	N/mm^2

Verifica al tempo t_0			
Posizione dell'asse neutro all'istante iniziale t_0	$x_{c(t0)}$	59	mm
Momento statico omogeneizzato all'istante inziale t_0	$S_{om,x\ (t0)}$	0	mm^3
Momento d'inerzia omogeneizzato all'istante inziale t_0	$I_{om,x\ (t0)}$	628654126	mm^4
Tensione di compressione nel calcestruzzo all'istante t_0	$\sigma_{c,QP(t0)}$	1.79	N/mm^2
Tensione nell'armatura inferiore (trazione) all'istante t_0	$\sigma_{s,QP(t0)}$	61	N/mm^2
Tensione nell'armatura superiore (compressione) all'istante t_0	$\sigma'_{s,QP(t0)}$	4	N/mm^2
Tensione di compressione nel calcestruzzo all'istante t_0	$\sigma_{c,rara(t0)}$	2.92	N/mm^2
Tensione nell'armatura inferiore (trazione) all'istante t_0	$\sigma_{s,rara(t0)}$	99	N/mm^2
Tensione nell'armatura superiore (compressione) all'istante t_0	$\sigma'_{s,rara(t0)}$	6	N/mm^2
Condizione di carico quasi permanente			
VERIFICA TENSIONE CALCESTRUZZO	$\sigma_{c,QP} \geq \sigma_{c,QP(t0)}$	VERIFICATO	
VERIFICA TENSIONE SULL'ACCIAIO TESO	$\sigma_s \geq \sigma_{s,QP(t0)}$	VERIFICATO	
VERIFICA TENSIONE SULL'ACCIAIO COMPRESSO	$\sigma'_s \geq \sigma'_{s,QP(t0)}$	VERIFICATO	
Condizione di carico rara			
VERIFICA TENSIONE CALCESTRUZZO	$\sigma_{c,rara} \geq \sigma_{c,rara(t0)}$	VERIFICATO	
VERIFICA TENSIONE SULL'ACCIAIO TESO	$\sigma_s \geq \sigma_{s,rara(t0)}$	VERIFICATO	
VERIFICA TENSIONE SULL'ACCIAIO COMPRESSO	$\sigma'_s \geq \sigma'_{s,rara(t0)}$	VERIFICATO	
Verifica al tempo t_∞			
Posizione dell'asse neutro all'istante t_∞	$x_{c(t\infty)}$	91	mm
Momento statico omogeneizzato all'istante t_∞	$S_{om,x\ (t\infty)}$	0	mm^3
Momento d'inerzia omogeneizzato all'istante t_∞	$I_{om,x\ (t\infty)}$	1658349145	mm^4
Tensione di compressione nel calcestruzzo all'istante t_∞	$\sigma_{c,QP(t\infty)}$	1.04	N/mm^2
Tensione nell'armatura inferiore (trazione) all'istante t_∞	$\sigma_{s,QP(t\infty)}$	63	N/mm^2
Tensione di compressione nel calcestruzzo all'istante t_∞	$\sigma_{c,rara(t\infty)}$	1.70	N/mm^2
Tensione nell'armatura inferiore (trazione) all'istante t_∞	$\sigma_{s,rara(t\infty)}$	102	N/mm^2
Condizione di carico quasi permanente			
VERIFICA TENSIONE CALCESTRUZZO	$\sigma_{c,QP} \geq \sigma_{c,QP(t\infty)}$	VERIFICATO	
VERIFICA TENSIONE SULL'ACCIAIO TESO	$\sigma_s \geq \sigma_{s,QP(t\infty)}$	VERIFICATO	
Condizione di carico rara			
VERIFICA TENSIONE CALCESTRUZZO	$\sigma_{c,rara} \geq \sigma_{c,rara(t\infty)}$	VERIFICATO	
VERIFICA TENSIONE SULL'ACCIAIO TESO	$\sigma_s \geq \sigma_{s,rara(t\infty)}$	VERIFICATO	

VERIFICA A FESSURAZIONE			
Resistenza media a trazione assiale	f_{ctm}	2.56	N/mm^2
Modulo elastico	E_s	210000	N/mm^2
Tensione nell'armatura tesa considerando la sezione fessurata	$\sigma_{s,QP(t0)}$	61	N/mm^2
Coefficiente di omogeneizzazione	$n_{(t0)}$	6.67	/
Altezza efficace della sezione di calcestruzzo	$h_{c,ef}$	100	mm
Area effecacie di calcestruzzo teso attorno all'armatura	$A_{c,eff}$	100000	mm^2
Rapporto aree	ρ_{eff}	0.009	/
Carichi di lunga durata 2	k_t	0.4	/
Deformazione unitaria media delle barre	$\varepsilon_{sm} \geq 0{,}6\sigma_s/E_s$	0.00017	/
Ricoprimento dell'armatura	c	40	mm
Spaziatura tra le armature	s	167	mm
Diametro ferri di armatura	ϕ	14	mm
Coeff. 1 (Circolare 21 gennaio 2019 cap.C4.1.2.2.4.5 e s.m.i.)	k_1	0.8	/
Coeff. 2 (Circolare 21 gennaio 2019 cap.C4.1.2.2.4.5 e s.m.i.)	k_2	0.5	/
Coeff. 3 (Circolare 21 gennaio 2019 cap.C4.1.2.2.4.5 e s.m.i.)	k_3	3.4	/
Coeff. 4 (Circolare 21 gennaio 2019 cap.C4.1.2.2.4.5 e s.m.i.)	k_4	0.425	/
Distanza media tra le fessure	Δ_{smedia}	232	mm
Valore di calcolo di apertura delle fessure	w_k	0.068	mm
VERIFICA APERTURE FESSURE IN AMBIENTE ORDINARIO	$w_k \leq 0.3$ mm	VERIFICATO	

VERIFICHE STRUTTURALI PILASTRI

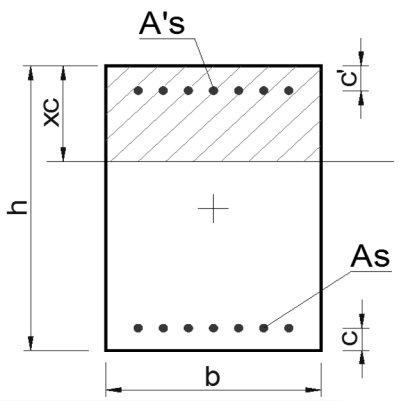

Geometria della sezione		
		[cm]
Altezza	h	30
Base	b	30

Sollecitazioni		
M	40	[kNm]
N	75	[kN]

Armatura tesa As			
n° ferri	Diametro [mm]	Area [cm²]	copriferro [cm]
3	16	6.03	3
		0.00	
		0.00	
		0.00	
		0.00	
		6.03	

Armatura compressa A's			
n° ferri	Diametro [mm]	Area [cm²]	copriferro [cm]
3	16	6.03	3
		0.00	
		0.00	
		0.00	
		0.00	
		6.03	

Materiali									
	γc	α_{cc}	Rck [Mpa]	fck [Mpa]	fcd [Mpa]	α fcd [Mpa]	fcc/fcd	ε_{c2}	ε_{cu2}
C25/30	1.5	0.85	30	25	16.7	14.2	0.8	0.200%	0.350%
	γE	γs	Es [Mpa]	fyk [Mpa]	fyd [Mpa]	ε_{ys}	ε_{uk}	α_s	ε_{ud}
B450C	1.00	1.15	200000	450	391.3	0.196%	7.500%	1	7.500%

◉ N costante

○ e costante

calcola

N ultimo	xc
75.0 [kN]	**4.66 [cm]**

Momento ultimo	FS
67.3 [kNm]	**1.68**

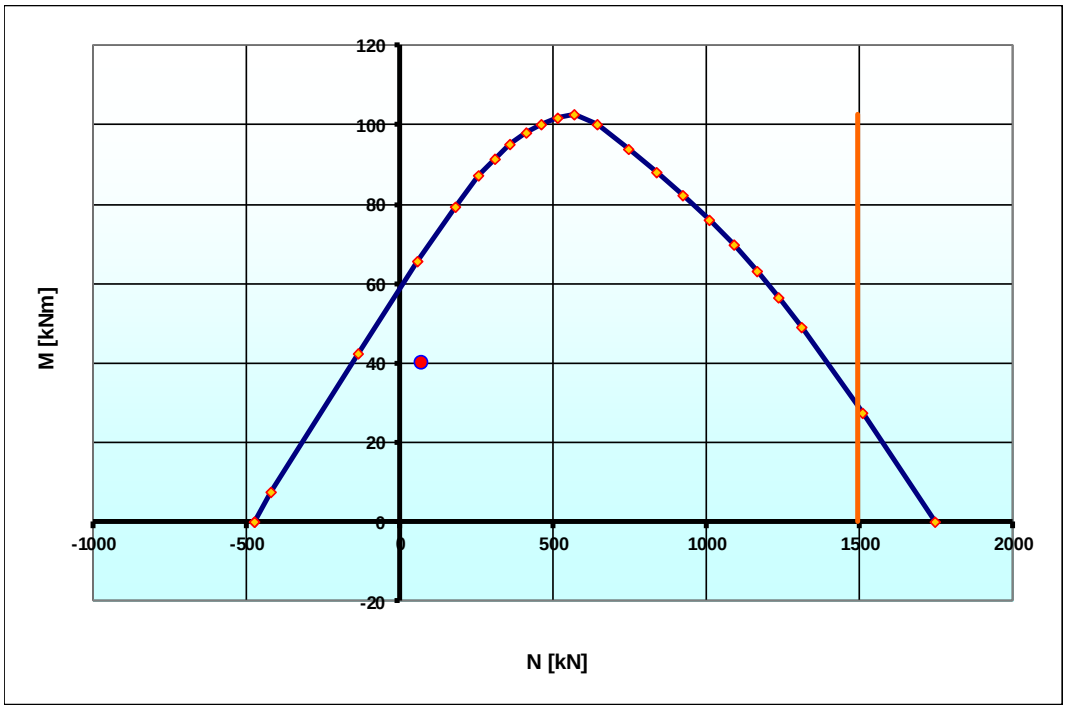

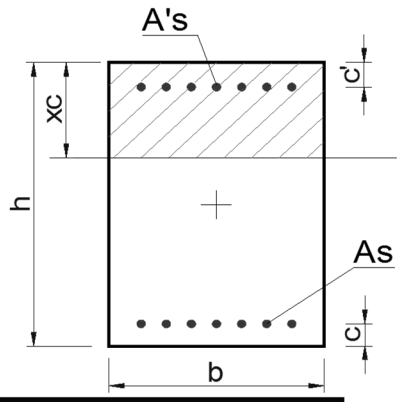

Geometria della sezione		
		[cm]
Altezza	h	30
Base	b	30

Sollecitazioni		
M	40	[kNm]
N	135	[kN]

Armatura tesa As			
n° ferri	Diametro [mm]	Area [cm²]	copriferro [cm]
3	16	6.03	3
		0.00	
		0.00	
		0.00	
		0.00	
		6.03	

Armatura compressa A's			
n° ferri	Diametro [mm]	Area [cm²]	copriferro [cm]
3	16	6.03	3
		0.00	
		0.00	
		0.00	
		0.00	
		6.03	

Materiali									
	γc	α_{cc}	Rck [Mpa]	fck [Mpa]	fcd [Mpa]	α fcd [Mpa]	fcc/fcd	ε_{c2}	ε_{cu2}
C25/30	1.5	0.85	30	25	16.7	14.2	0.8	0.200%	0.350%
	γE	γs	Es [Mpa]	fyk [Mpa]	fyd [Mpa]	ε_{ys}	ε_{uk}	α_s	ε_{ud}
B450C	1.00	1.15	200000	450	391.3	0.196%	7.500%	1	7.500%

◉ N costante

○ e costante

calcola

N ultimo	xc
135.0 [kN]	**5.36 [cm]**

Momento ultimo	FS
74.2 [kNm]	**1.86**

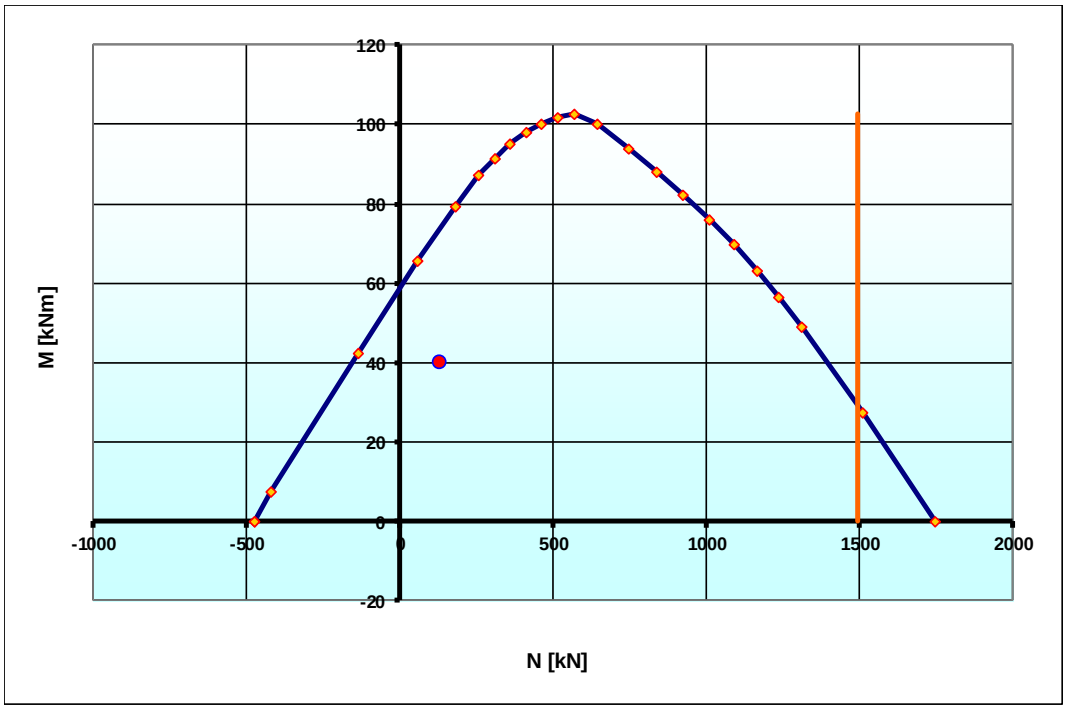

VERIFICHE STRUTTURALI CORDOLI

DATI

Altezza sezione	h	0.30	m
Larghezza sezione	b	0.30	m
Classe di esposizione ambientale		XC2	/
Copriferro minimo	c_{min}	30	mm
Distanza del baricentro delle armature longitudinali dalla superficie di calcestruzzo più vicina	d'	0.03	m
Interasse minimo tra le armature	i_{min}	40	mm
Altezza utile	d	0.27	m
Deformazione della sezione di calcestruzzo compresso (Ipotesi di mantenimeto delle sezioni piane e aderenza a rottura continua)	$\varepsilon_c=\varepsilon_{cu}$	-0.0035	/
Coefficiente di riempimento (per ε_c=3,5‰)	β_1	0.810	/
Coefficiente di posizione (per ε_c=3,5‰)	β_2	0.416	/
Momento sollecitante SLU	M_{sd}	38.0	kNm
Taglio agente	V_{sd}	42.0	kN
Momento sollecitante condizioni di carico quasi permanente SLE	$M_{sd,QP}$	20.0	kNm
Momento sollecitante condizioni di carico rara SLE	$M_{sd,rara}$	27.0	kNm

MATERIALI

Conglomerato cementizio a prestazione garantita conforme alla EN 206-1 e alla UNI EN 11104			
Resistenza caratteristica cubica a compressione a 28 giorni	R_{ck}	30.0	N/mm^2
Resistenza caratteristica cilindrica a compressione a 28 giorni	f_{ck}	25.0	N/mm^2
Resistenza media cilindrica a compressione	f_{cm}	33.0	N/mm^2
Modulo elastico	E_{cm}	31476	N/mm^2
Modulo elastico di calcolo	E_{cd}	26230	N/mm^2
Coeff. di Poisson calcestruzzo non fessurato	ν	0.2	
Coeff. di Poisson calcestruzzo fessurato	ν	0	
Situazione di progetto persistente			
Coefficiente parziale di sicurezza	γ_c	1.5	
Coefficiente per le resistenze di lunga durata	α_{cc}	0.85	
Resistenza di calcolo a compressione	f_{cd}	14.2	N/mm^2
Resistenza di calcolo a compressione	f_{cd}	14167	kN/m^2
Resistenza media a trazione assiale	f_{ctm}	2.56	N/mm^2
Valore medio della resistenza a trazione per flessione	f_{cfm}	3.08	N/mm^2
	$f_{ctk,0,05}$	1.80	N/mm^2
Resistenza di calcolo a trazione	f_{ctd}	1.20	N/mm^2
Resistenza di calcolo a trazione	f_{ctd}	1196983	N/m^2
Situazione di progetto eccezionale e sismica			
Coefficiente parziale di sicurezza	γ_c	1	
Resistenza di calcolo a compressione	f_{cd}	25.0	N/mm^2
Resistenza di calcolo a compressione	f_{cd}	25000000	N/m^2
Acciaio B450C conforme alla UNI EN ISO 9001:2000 e UNI EN ISO 15630-1:			
Tensione caratteristica di rottura	f_{tk}	540	N/mm^2
Tensione caratteristica di rottura	f_{tk}	540000	kN/m^2
Tensione caratteristica di snervamento	f_{yk}	450	N/mm^2
Tensione caratteristica di snervamento	f_{yk}	450000	kN/m^2
Modulo elastico	E_s	210000	N/mm^2
Situazione di progetto persistente			
Coefficiente parziale di sicurezza	γ_s	1.15	
Resistenza di calcolo	f_{yd}	391	N/mm^2
Resistenza di calcolo	f_{yd}	391000	kN/m^2
Situazione di progetto eccezionale e sismica			
Coefficiente parziale di sicurezza	γ_s	1	
Resistenza di calcolo	f_{yd}	450	N/mm^2
Resistenza di calcolo	f_{yd}	450000	kN/m^2

DIMENSIONAMENTO ARMATURE LONGITUDINALI

Risultante delle forze di compressione	C	150.5	kN
Profondità dell'asse neutro	x	0.044	m
Momento resistente	M_{Rd}	38.0	kN
Profondità dell'asse neutro (il valore deve essere < 0,45 per avere rottura duttile nell'acciaio)	ξ=x/d	0.164	/
Area minima da normativa	A_{min}	121.5	mm^2
Area minima richiesta	$A_{s,req}$	385	mm^2
Area di calcolo	A_{max}	385	mm^2
Diametro ferri disposti in zona tesa - strato 1	$\varnothing_1$	16	mm
n° di ferri disposti in zona tesa - strato 1	n_1	3	/
Diametro ferri disposti in zona tesa - strato 2	$\varnothing_1$	0	mm
n° di ferri disposti in zona tesa - strato 2	n_1	0	/
Area delle armature in zona tesa	A_s	603	mm^2
Diametro ferri disposti in zona compressa - strato 1	$\varnothing_2$	16	mm
n° di ferri disposti zona in compressa - strato 1	n_1	3	/
Diametro ferri disposti in zona compressa - strato 2	$\varnothing_2$	0	mm
n° di ferri disposti in zona compressa - strato 2	n_1	0	/
Area delle armature in zona compressa	A'_s	603	mm^2
Scarto	$(M_{Rd} - M_{sd})^2$	0	/
VERIFICA A FLESSIONE			
Area delle armature in zona tesa	A_s	603	mm^2
Area delle armature in zona compressa	A'_s	603	mm^2
Profondità dell'asse neutro	x	39	mm
Deformazione calcestruzzo (zona compressa)	ε_c	-0.0035	/
Deformazione acciaio disposto in zona tesa	ε_s	0.0207	/
Deformazione acciaio disposto in zona compressa	ε'_s	-0.000813	/
Tensione agente nella zona compressa di calcestruzzo	σ_c	14.2	N/mm^2
Tensione agente sull'armatura tesa	σ_s	391	N/mm^2
Tensione agente sull'armatura compressa	σ'_s	-171	N/mm^2
Risultante di compressione nel calcestruzzo	C	-132862	N
Risultante di trazione sull'armatura tesa	S	235846	N
Risultante di compressione sull'armatura compressa	S'	-102983	N
Bilancio	C+S+S'	0	N
Profondità asse neutro	x/d	0.145	/
Momento resistente	M_{Rd}	58.5	kNm
Momento sollecitante	M_{sd}	38.0	kNm
VERIFICA A FLESSIONE	$M_{Rd} > M_{sd}$	VERIFICATO	
VERIFICA DUTTILITA'	x/d < 0.45	VERIFICATO	

VERIFICA AL TAGLIO CON ARMATURA SPECIFICA

Inclinazione staffe	α	90	gradi
Inclinazione staffe	α	1.57	radianti
	Cotgα	0.0	radianti
Diametro ferri	Φ	8	mm
Area del ferro	A	50.24	mm^2
Numero bracci	n	2	/
Passo armatura al taglio	s	20	cm
Il valore di Cotgθ deve essere compreso tra: $1 \leq Cotg\theta \leq 2,5$ ($21,8° \leq \theta \leq 45°$)	Cotgθ	2.5	radianti
Area armatura a taglio al metro lineare	A_{sw}	502	mm^2
Resistenza di calcolo a "taglio trazione" riferita all'armatura trasversale	V_{Rsd}	597	kN
Resistenza di calcolo a "taglio compressione" riferita al calcestruzzo d'anima	V_{Rcd}	178	kN
Scarto	$V_{Rcd} - V_{Rsd}$	-419	kN
Taglio sollecitante	V_{sd}	42.0	kN
VERIFICA A COMPRESSIONE DEL CALCESTRUZZO D'ANIMA	$V_{Rcd} \geq V_{sd}$	VERIFICATO	
VERIFICA A TRAZIONE DELLE ARMATURE TRASVERSALI	$V_{Rsd} \geq V_{sd}$	VERIFICATO	
ARMATURA MINIMA DA NORMATIVA (EC2 Prosp. 5.5)			
Percentuale di armatura minima secondo Eurocodice	ρ_w	0.0013	/
Inclianzione staffe	α	90	gradi
Inclianzione staffe	α	1.57	radianti
Armatura minima (riferita ad un metro quadro di priastra)	A_{sw}/s	390	mm^2/m
Diametro ferri	Φ	8	mm
Area del ferro	A	50.24	mm^2
Numero bracci	n	2	/
Numero di ferri da disporre in un metro quadro di piastra	$n_{ferri,tot}$	4	/
Numero di ferri da disporre al metro lineare	n_{ferri}	1.33333333	/
Passo armatura al taglio	s	75	cm
ARMATURA ADOTTATA			
Area di armatura da disporre al metro lineare	A_{sw}/s	502.4	mm^2/m
Numero di ferri da disporre in un metro quadro di piastra	$n_{ferri,tot}$	15	/
Numero di ferri da disporre al metro lineare	n_{ferri}	5	/
Passo armatura al taglio	s	20	cm
Diametro armatura	Φ	8	mm
Area armatura	A	50	mm^2

VERIFICA DELLE TENSIONI DI ESERCIZIO

Altezza sezione	h	300	mm
Lerghezza sezione	b	300	mm
Altezza utile	d	270	mm
Distanza del baricentro delle armature longitudinali dalla superficie di calcestruzzo più vicina	d'	30	mm
Area della sezione di calcestruzzo	A_c	90000	mm^2
Modulo elastico calcestruzzo	E_{cm}	31476	N/mm^2
Modulo elastico acciaio	E_s	210000	N/mm^2
Momento sollecitante condizioni di carico quasi permanente SLE	$M_{sd,QP}$	20000000	Nmm
Momento sollecitante condizioni di carico rara SLE	$M_{sd,rara}$	27000000	Nmm
Perimetro sezione calcestruzzo esposta all'aria (NTC 2018 cap. 11.2.10.6)	u	1200	m
Coefficiente di omogeneizzazione	$n_{(t0)}$	6.67	/
Dimensione fittizia (NTC 2018 par. 11.2.10.7)	h_0	150	mm
Coeff. di viscosità (NTC 2018 tab. 11.2.VI) per umidità relativa 75% e per t_0>60 giorni	$\varphi(\infty,t_0)$	2.16	/
Modulo elastico calcestruzzo effettivo	$E_{c,eff}$	9961	N/mm^2
Coefficiente di omogenizzazione effettivo	n_{eff}	21.08	/
Area delle armature in zona tesa	A_s	603	mm^2
Area delle armature in zona compressa	A'_s	603	mm^2
Massima tensione del calcestruzzo per condizione di carico quasi permanente (NTC 2018 par. 4.1.2.2.5.1)	$\sigma_{c,QP}$	11.25	N/mm^2
Massima tensione del calcestruzzo per condizione di carico rara (NTC 2018 par. 4.1.2.2.5.1)	$\sigma_{c,rara}$	15.00	N/mm^2
Massima tensione sull'acciaio di armatura (NTC 2018 par. 4.1.2.2.5.2)	σ_s	360	N/mm^2

Verifica al tempo t_0			
Posizione dell'asse neutro all'istante iniziale t_0	$x_{c(t0)}$	68	mm
Momento statico omogeneizzato all'istante inziale t_0	$S_{om,x\ (t0)}$	0	mm^3
Momento d'inerzia omogeneizzato all'istante inziale t_0	$I_{om,x\ (t0)}$	200587964	mm^4
Tensione di compressione nel calcestruzzo all'istante t_0	$\sigma_{c,QP(t0)}$	6.74	N/mm^2
Tensione nell'armatura inferiore (trazione) all'istante t_0	$\sigma_{s,QP(t0)}$	135	N/mm^2
Tensione nell'armatura superiore (compressione) all'istante t_0	$\sigma'_{s,QP(t0)}$	25	N/mm^2
Tensione di compressione nel calcestruzzo all'istante t_0	$\sigma_{c,rara(t0)}$	9.10	N/mm^2
Tensione nell'armatura inferiore (trazione) all'istante t_0	$\sigma_{s,rara(t0)}$	182	N/mm^2
Tensione nell'armatura superiore (compressione) all'istante t_0	$\sigma'_{s,rara(t0)}$	34	N/mm^2
Condizione di carico quasi permanente			
VERIFICA TENSIONE CALCESTRUZZO	$\sigma_{c,QP} \geq \sigma_{c,QP(t0)}$	VERIFICATO	
VERIFICA TENSIONE SULL'ACCIAIO TESO	$\sigma_s \geq \sigma_{s,QP(t0)}$	VERIFICATO	
VERIFICA TENSIONE SULL'ACCIAIO COMPRESSO	$\sigma'_s \geq \sigma'_{s,QP(t0)}$	VERIFICATO	
Condizione di carico rara			
VERIFICA TENSIONE CALCESTRUZZO	$\sigma_{c,rara} \geq \sigma_{c,rara(t0)}$	VERIFICATO	
VERIFICA TENSIONE SULL'ACCIAIO TESO	$\sigma_s \geq \sigma_{s,rara(t0)}$	VERIFICATO	
VERIFICA TENSIONE SULL'ACCIAIO COMPRESSO	$\sigma'_s \geq \sigma'_{s,rara(t0)}$	VERIFICATO	
Verifica al tempo t_∞			
Posizione dell'asse neutro all'istante t_∞	$x_{c(t\infty)}$	97	mm
Momento statico omogeneizzato all'istante t_∞	$S_{om,x\ (t\infty)}$	0	mm^3
Momento d'inerzia omogeneizzato all'istante t_∞	$I_{om,x\ (t\infty)}$	526239446	mm^4
Tensione di compressione nel calcestruzzo all'istante t_∞	$\sigma_{c,QP(t\infty)}$	3.67	N/mm^2
Tensione nell'armatura inferiore (trazione) all'istante t_∞	$\sigma_{s,QP(t\infty)}$	139	N/mm^2
Tensione di compressione nel calcestruzzo all'istante t_∞	$\sigma_{c,rara(t\infty)}$	4.95	N/mm^2
Tensione nell'armatura inferiore (trazione) all'istante t_∞	$\sigma_{s,rara(t\infty)}$	188	N/mm^2
Condizione di carico quasi permanente			
VERIFICA TENSIONE CALCESTRUZZO	$\sigma_{c,QP} \geq \sigma_{c,QP(t\infty)}$	VERIFICATO	
VERIFICA TENSIONE SULL'ACCIAIO TESO	$\sigma_s \geq \sigma_{s,QP(t\infty)}$	VERIFICATO	
Condizione di carico rara			
VERIFICA TENSIONE CALCESTRUZZO	$\sigma_{c,rara} \geq \sigma_{c,rara(t\infty)}$	VERIFICATO	
VERIFICA TENSIONE SULL'ACCIAIO TESO	$\sigma_s \geq \sigma_{s,rara(t\infty)}$	VERIFICATO	

VERIFICA A FESSURAZIONE			
Resistenza media a trazione assiale	f_{ctm}	2.56	N/mm^2
Modulo elastico	E_s	210000	N/mm^2
Tensione nell'armatura tesa considerando la sezione fessurata	$\sigma_{s,QP(t0)}$	135	N/mm^2
Coefficiente di omogeneizzazione	$n_{(t0)}$	6.67	/
Altezza efficace della sezione di calcestruzzo	$h_{c,ef}$	75	mm
Area effecacie di calcestruzzo teso attorno all'armatura	$A_{c,eff}$	22500	mm^2
Rapporto aree	ρ_{eff}	0.027	/
Carichi di lunga durata 2	k_t	0.4	/
Deformazione unitaria media delle barre	$\varepsilon_{sm} \geq 0{,}6\sigma_s/E_s$	0.00043	/
Ricoprimento dell'armatura	c	30	mm
Spaziatura tra le armature	s	100	mm
Diametro ferri di armatura	ϕ	16	mm
Coeff. 1 (Circolare 21 gennaio 2019 cap.C4.1.2.2.4.5 e s.m.i.)	k_1	0.8	/
Coeff. 2 (Circolare 21 gennaio 2019 cap.C4.1.2.2.4.5 e s.m.i.)	k_2	0.5	/
Coeff. 3 (Circolare 21 gennaio 2019 cap.C4.1.2.2.4.5 e s.m.i.)	k_3	3.4	/
Coeff. 4 (Circolare 21 gennaio 2019 cap.C4.1.2.2.4.5 e s.m.i.)	k_4	0.425	/
Distanza media tra le fessure	Δ_{smedia}	120	mm
Valore di calcolo di apertura delle fessure	w_k	0.087	mm
VERIFICA APERTURE FESSURE IN AMBIENTE ORDINARIO	$w_k \leq 0.3$ mm	VERIFICATO	

Dalle elaborazioni sopra riportate si evince come **tutte le verifiche strutturali relative agli elementi in c.c.a. possono ritenersi adeguatamente soddisfatte con valori di tensione nei materiali compatibili con l'uso previsto dell'opera in esercizio e contenute entro il 45% di f_{ck} per il calcestruzzo ed entro l'80% di f_{yk} per l'acciaio. Le verifiche a fessurazione risultano, altresì, soddisfatte nel rispetto dei limiti previsti da normativa per le condizioni di esercizio frequente e quasi permanente.**

Si rimanda all'elaborato grafico n. 16 per i dettagli delle armature.

Le deformazioni risultano compatibili con l'uso e la funzionalità dell'opera.

Si riporta, nel seguito, la **verifica dell'orditura in legno della copertura** dell'edificio tecnico in progetto, il cui comportamento strutturale viene cautelativamente considerato indipendente rispetto al telaio in c.c.a. dell'edificio. In tal senso la trave di colmo, in appoggio continuo sul cordolo sommitale in c.c.a., verrà prudenzialmente dimensionata con schema statico di semplice appoggio sui pilastri in elevazione e con luce di calcolo pari a 3,80 m (interasse pilastri).

CALCOLO COPERTURA IN LEGNO EDIFICIO TECNICO

NB: Le verifiche di resistenza nel seguito riportate sono state condotte con riferimento al paragrafo 4.4 del D.M. 17.01.2018 e ipotizzano un comportamento strutturale lineare sia per le relazioni tensioni-deformazioni, sia per l'analisi delle sollecitazioni.

PARAMETRI DI RESISTENZA E RIGIDEZZA

Legno massiccio da costruzione		***Trave***	***Puntoni***
Classe di resistenza		**C24**	**C24**
Resistenze in Mpa			
flessione	f_{mk}	24.00	24.00
trazione parallela fibratura	$f_{t,0,k}$	14.00	14.00
trazione perpendicolare alla fibratura	$f_{t,90,k}$	0.50	0.50
compressione parallela alla fibratura	$f_{c,0,k}$	21.00	21.00
compressione perpendicolare alla fibratura	$f_{c,90,k}$	2.50	2.50
taglio	$f_{v,k}$	2.50	2.50
Modulo elastico in Gpa			
medio parallelo alle fibre	$E_{0,mean}$	11.00	11.00
caratteristico parallelo alle fibre	$E_{0,05}$	7.40	7.40
medio perpendicolare alle fibre	$E_{90,mean}$	0.37	0.37
modulo di taglio medio	G_{mean}	0.69	0.69
Massa volumica in kg/m³			
massa volumica media	ρ_m	420	420

CLASSE DI SERVIZIO

La copertura in progetto è classificabile in "classe di servizio 2"

poiché caratterizzato da un'umidità del materiale in equilibrio con l'ambiente a una temperatura di 20°C e un'umidità relativa dell'aria circostante che superi l' 85% solo per poche settimane all'anno.

Il coefficiente di correzione k_{mod} della resistenza è definito in funzione della classe di durata del carico, come indicato nella tabella seguente,

Classe di durata del carico	Durata cumulata del carico	Esempio di carico
Permanente	più di 10 anni	peso proprio
Lunga durata	da 6 mesi a 10 anni	carico esercizio di depositi, archivi, ecc
Media durata	da 1 settimana a 6 mesi	carico di esercizio in generale
Breve durata	meno di una settimana	neve* e vento
Istantaneo		sisma, eventi eccezionali
* in zone climatiche dove si registrano carichi di neve per periodi prolungati è opportuno considerare una parte del carico come di media durata.		

Il valore è desunto dalla tabella sotto riportata, ricordando che, se una combinazione di carico comprende azioni di differenti classi di durata di carico è opportuno scegliere un valore di kmod che corrisponde all'azione di minore durata e, in ogni caso, più gravosa ai fini delle verifiche di resistenza

k_{mod}	Legno massiccio, legno lamellare, compensato		
Classe durata carico	Classe di servizio		
	1	2	3
Permanente	0.60	0.60	0.50
Lunga durata	0.70	0.70	0.55
Media durata	0.80	0.80	0.65
Breve durata	0.90	**0.90**	0.70
Istantaneo	1.10	1.10	0.90

La deformazione istantanea è calcolata usando i valori medi dei moduli elastici per le membrature e il valore istantaneo del modulo di scorrimento dei collegamenti.
La deformazione a lungo termine, per tener conto del comportamento reologico del legno, è calcolata, invece, utilizzando i valori medi dei moduli elastici ridotti mediante il fattore:

$1/(1+k_{def}) =$ **0.556**

con k_{def} riportato in tabella:

K_{def}	Legno massiccio, legno lamellare, compensato		
Classe durata carico	**Classe di servizio**		
	1	2	3
kdef - Legno massiccio EN 14080	0.60	**0.80**	2.00

VALORI RESISTENTI

I valori resistenti del materiale vengono definiti come:

$f_{Rd} = k_{mod} \times f_k/\gamma_M$

con:

combinazioni fondamentali

γ_M =	**1.50**	***legno massiccio***
γ_M =	1.45	*legno lamellare*
γ_M =	1.50	*unioni*

combinazioni eccezionali

γ_M =	1.00	

AZIONI CONSIDERATE AI FINI DEL DIMENSIONAMENTO STRUTTURALE

Sono considerate, agenti sulla struttura, le seguenti azioni di calcolo:

1) *pesi propri strutturali*
2) *carichi permanenti portati dalla struttura*
3) *azioni variabili sulla copertura di breve durata: neve*
4) *azioni variabili sulla copertura di durata istantanea: vento*
5) *azioni variabili per operazioni di manutenzione sulla copertura (in alternativa a 3 e a 4)*

ANALISI DEI CARICHI

Sovraccarico neve

altitudine edificio:	> 200 m s.l.m.	
qsk (Tr 100 anni) =	2.14	kN/m^2
μ_i =	0.80	*coefficiente di forma della copertura*
ce =	1.00	*coefficiente di esposizione*
ct =	1.00	*coefficiente termico*
qs =	**1.70**	**kN/m^2**

Azione del vento

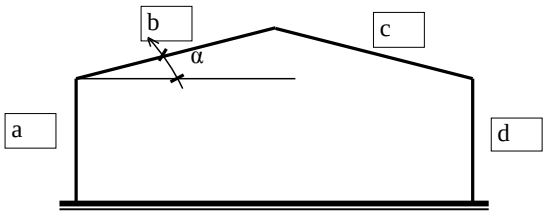

α
19 °

I valori numerici per le singole superfici e per le combinazioni pressione-depressione interna sono riassunti nella tabella seguente:

	$q_{v,a}$	$q_{v,b}$	$q_{v,c}$	$q_{v,d}$
COEFFICIENTI DI FORMA	kN/m²	kN/m²	kN/m²	kN/m²
pressione esterna - c_{pe} = +0,8	0.75			
pressione esterna - c_{pe} = 0,8*(1+senα)		**1.00**		
depressione esterna - c_{pe} = -0,6			-0.55	-0.55
depressione interna - c_{pi} = -0,60+(α–15)/100	-0.55	-0.55	-0.55	-0.55

Sovraccarico per manutenzione della copertura

Cat. H tabella 3.1.II N.T.C.-2018 - q_k = 1.00 kN/m^2

<u>Carichi permanenti portati</u>

Correnti:

b =	60	mm
h =	80	mm
A =	48	cm^2
J =	256.0	cm^4
Wx =	64	cm^3
massa volumica caratteristica	400	kg/m^3
interasse =	55	cm
peso proprio listelli =	0.03	kN/m^2

Manto di copertura e perlinatura:

guaina + impermeabilizzante =	0.10	kN/m^2
perlinatura / tavolato =	0.12	kN/m^2
listellatura e manto di copertura =	0.50	kN/m^2
carico permanente portato totale =	**0.75**	**kN/m^2**
carico al metro lineare =	**0.42**	**kN/m**

DIMENSIONAMENTO E VERIFICA DEGLI ELEMENTI STRUTTURALI

Puntoni

Qualità legno:	*Uso Fiume / Uso Trieste*	
classe di resistenza:	***C24***	
b =	190	mm
h =	190	mm
A =	361	cm^2
J =	10860.1	cm^4
Wx =	1143	cm^3
luce di calcolo =	4.80	m
massa volumica media =	420	kg/m^3
interasse =	90	cm
peso proprio puntoni =	0.17	kN/m^2
carico totale trasmesso dalla copertura =	0.75	kN/m^2
Totale carichi permanenti	**0.94**	**kN/m^2**
carico permanente al metro lineare =	**0.85**	**kN/m**
inclinazione elementi (α) =	19.0	°
cos (α) =	0.95	

Schena statico:

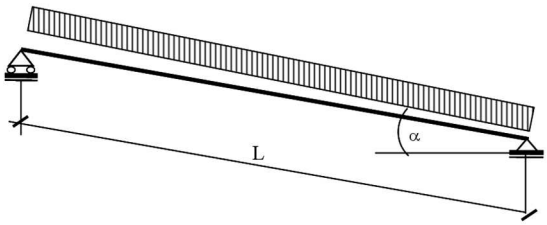

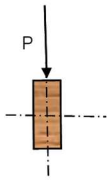

Coefficienti parziali per le azioni nelle verifiche a SLU (STR)

Coefficiente azioni permanenti - γG =	1.3
Coefficiente azioni variabili - γQ =	1.5

SLU - combinazione fondamentale

Azione variabile neve: $\gamma Q_1 \cdot Q_{k1}$ =	2.17	kN/m
Azione variabile vento: $\gamma Q_2 \cdot \Psi_{02} \cdot Q_{k2}$ =	0.81	kN/m
Azioni permanenti + p. proprio: $\gamma G \cdot G$ =	1.04	kN/m
Azione di calcolo: Sdu =	**4.02**	**kN/m**

SOLLECITAZIONI DI CALCOLO

Momento flettente max Mdu =	**11.58**	**kN*m**
Taglio max Tdu =	**9.65**	**kN**

SLE - combinazione rara

Azione variabile neve: Q_{k1} =	1.45	kN/m
Azione variabile vento: $\Psi_{02} \cdot Q_{k2}$ =	0.54	kN/m
Azioni permanenti + p. proprio: G =	0.80	kN/m
Azione di calcolo: Sde =	**2.79**	**kN/m**

Progetto della sezione:

Kmod =	0.90	breve durata

VERIFICA A FLESSIONE

sigma max =	10.13	N/mm^2	
fm,d =	14.40	N/mm^2	
σ/f_{md} =	70%		***VERIFICATO***

VERIFICA A TAGLIO

tau max =	0.40	N/mm^2	
fv,d =	1.55	N/mm^2	
τ/f_{vd} =	26%		***VERIFICATO***

VERIFICA A DEFORMAZIONE	*freccia*		*fmax [cm]*	*pari a*	
freccia istantanea solo c.v. (W_{ist}) =	1.15	cm	1.60	1/300	***VERIFICATO***
freccia a lungo termine solo c.p.(W_{dif}) =	0.83	cm			
freccia totale ($W_{net,fin}$) =	1.98	cm	2.40	1/200	***VERIFICATO***

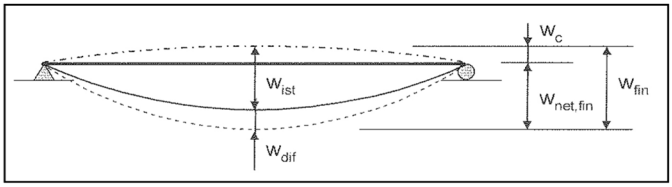

Schema componenti deformazione

Trave di colmo

Qualità legno:	*Uso Fiume / Uso Trieste*	
classe di resistenza:	***C24***	
b =	300	mm
h =	300	mm
A =	900	cm^2
J =	67500.0	cm^4
Wx =	4500	cm^3
luce di calcolo =	3.80	m
massa volumica media =	420	kg/m^3
peso proprio trave =	0.38	kN/m
inclinazione elementi (α) =	0.0	°
cos (α) =	1.00	
larghezza di influenza copertura =	4.80	m

Schena statico:

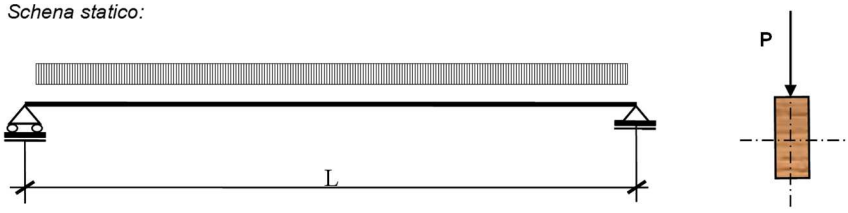

SLU - combinazione fondamentale		
Azione variabile neve: $\gamma Q_1 \cdot Q_{k1}$ =	12.24	kN/m
Azione variabile vento: $\gamma Q_2 \cdot \Psi_{02} \cdot Q_{k2}$ =	4.32	kN/m
Azioni permanenti + p. proprio: $\gamma G \cdot G$ =	6.37	kN/m
Azione di calcolo: Sdu =	**22.93**	**kN/m**

SOLLECITAZIONI DI CALCOLO

Momento flettente max Mdu =	**41.39**	**kN*m**
Taglio max Tdu =	**43.57**	**kN**

SLE - combinazione frequente		
Azione variabile neve: Q_{k1} =	8.16	kN/m
Azione variabile vento: $\Psi_{02} \cdot Q_{k2}$ =	2.88	kN/m
Azioni permanenti + p. proprio: G =	4.90	kN/m
Azione di calcolo: Sde =	**15.94**	**kN/m**

Progetto della sezione:

K_{mod} =	0.90	*breve durata*

VERIFICA A FLESSIONE

sigma max =	9.20	N/mm^2
fm,d =	14.40	N/mm^2
σ/f_{md} =	64%	***VERIFICATO***

VERIFICA A TAGLIO

tau max =	0.73	N/mm^2
fv,d =	1.55	N/mm^2
τ/f_{vd} =	47%	***VERIFICATO***

VERIFICA A DEFORMAZIONE	*freccia*		*fmax [cm]*	*pari a*	
freccia istantanea solo c.v. (W_{ist}) =	0.40	cm	1.27	1/300	***VERIFICATO***
freccia a lungo termine solo c.p.(W_{dif}) =	0.32	cm			
freccia totale ($W_{net,fin}$) =	0.73	cm	1.90	1/200	***VERIFICATO***

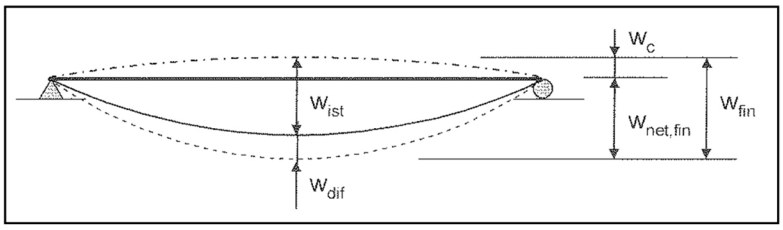

Schema componenti deformazione

8.1.4 Verifiche geotecniche

Il presente paragrafo riporta, infine, la **verifica a capacità portante** del sistema terreno-fondazione per le combinazioni **A1+M1+R3** e **A2+M2+R2** previste dalle N.T.C.-2018, eseguita con la formulazione di *Brinch-Hansen*, considerando aggiuntivamente anche i fattori correttivi sismici *z* come definiti da *Paolucci & Pecker* (1997). Il problema è valutato considerando cautelativamente un angolo di attrito pari a 27° relativo all'unità geotecnica II, coesione nulla, un approfondimento della fondazione nullo ed un livello della falda a -2 m dal p.c. relativo.

La seguente tabella riepiloga le azioni risultanti in corrispondenza della fondazione della costruzione, per l'inviluppo delle combinazioni a SLU (fondamentale e sismica) e a SLE, desunte dal modello ad elementi finiti, con evidenziata la combinazione più gravosa ai fini delle presenti verifiche geotecniche della fondazione:

AZIONI COMBINATE			
Combinazione	**FX [kN]**	**FY [kN]**	**FZ [kN]**
Inviluppo SLU fondamentale e sismica	**114**	**142**	**6617**
Inviluppo SLE	- 50	0	4904

Tabella 11 – risultante delle azioni trasmesse in fondazione a SLU e a SLE.

Il carico limite che può gravare sul terreno risulta, quindi, calcolato con la seguente espressione (si veda a riguardo il *paragrafo 7.4*):

$$q_{lim} = q*N_q*\alpha_q+c'*N_c*\alpha_c+0.5*B'*\gamma*N_\gamma*\alpha_\gamma$$

Mentre il valore della resistenza di calcolo, ovvero del carico limite, vale:

$$q_{lim,R3} = \frac{q_{lim}}{\gamma_{R3}} = \frac{q_{\lim}}{2,3}$$

Verifica combinazione A1+M1+R3

eccentricità in x [e_x]	0,00	m
eccentricità in y [e_y]	0,00	m
B'	11,60	m
L'	13,70	m
Profondità fondazione	0,00	m
m	1,49	
N_γ	14,47	

N_q	13,20	
N_c	23,94	
i_γ	0,93	
i_q	0,96	
i_c	0,96	
s_γ	0,66	
s_q	1,43	
s_c	1,47	
b_γ	1,00	
b_q	1,00	
b_c	1,00	
g_γ	1,00	
g_q	1,00	
g_c	1,00	
d_γ	1,00	
d_q	1,00	
d_c	1,00	
z_γ	0.90	
z_q	0,90	
z_c	0,96	
q_{lim}	**499,7**	**kN/m²**

Il carico limite che può gravare sul terreno risulta, quindi, pari a:

$$q_{lim} = q*N_q*\alpha_q+c'*N_c*\alpha_c+0.5*B'*\gamma*N_\gamma*\alpha_\gamma \cong 0,50 \ N/mm^2$$

Il valore della **resistenza di calcolo (valore di carico limite)** secondo le N.T.C.-2018 vale:

$$q_{lim,R3} = \frac{q_{lim}}{\gamma_{R3}} = 0,50/2,3 \cong 0,22 \ N/mm^2 \ (220 \ kN/m^2) > q = 0,042 \ N/mm^2$$

F.S. $\cong$ 0,50 N/mm² / 0,042 N/mm² $\cong$ 11,9 > 2,3

Verifica combinazione A2+M2+R2

eccentricità in x [e_x]	0,00	m
eccentricità in y [e_y]	0,00	m
B'	11,60	m
L'	13,70	m
Profondità fondazione	0,00	m
m	1,49	
N_γ	7,31	
N_q	7,96	
N_c	17,08	
i_γ	0,93	
i_q	0,96	
i_c	0,95	
s_γ	0,66	

s_q	1,35	
s_c	1,39	
b_γ	1,00	
b_q	1,00	
b_c	1,00	
g_γ	1,00	
g_q	1,00	
g_c	1,00	
d_γ	1,00	
d_q	1,00	
d_c	1,00	
z_γ	0.87	
z_q	0,87	
z_c	0,96	
q_{lim}	**243,9**	**kN/m²**

Il carico limite che può gravare sul terreno risulta, quindi, pari a:

$$q_{lim} = q*N_q*\alpha_q+c'*N_c*\alpha_c+0.5*B'*\gamma*N_\gamma*\alpha_\gamma \cong 0,24 \ N/mm^2$$

Il valore della **resistenza di calcolo (valore di carico limite)** secondo le N.T.C.-2018 vale:

$$q_{lim,R3} = \frac{q_{lim}}{\gamma_{R3}} = 0,24/\ 1,1 \cong 0,22 \ N/mm^2 \ (220 \ kN/m^2) > q = 0,042 \ N/mm^2$$

F.S. $\cong$ 0,22 N/mm² / 0,042 N/mm² $\cong$ 5,2 > 1,1

LE VERIFICHE A CAPACITÀ PORTANTE POSSONO, DUNQUE, RITENERSI SODDISFATTE.

Si può, quindi, concludere che le pressioni trasmesse al terreno di fondazione, anche con riferimento ai coefficienti di sicurezza assunti, possono essere ritenute compatibili ed ammissibili con l'esercizio e la funzionalità della costruzione in progetto, nonché con le proprietà geotecniche specifiche del terreno in sito.

Dai risultati ottenuti dalle verifiche geotecniche si possono, inoltre, cautelativamente stimare valori di cedimento massimo in fondazione di circa 3/4 mm. I cedimenti differenziali a lungo termine nell'ambito della superficie della platea di fondazione si mantengono, inoltre, nell'ordine di pochi millimetri. Tali valori, anche con riferimento ai coefficienti di sicurezza assunti ed in relazione alla normativa vigente e alla letteratura tecnica in materia di costruzioni possono, dunque, essere ritenuti del tutto compatibili ed ammissibili per l'esercizio e la funzionalità dell'opera.

8.2 Manufatti idraulici a minore rilevanza strutturale

In progetto sono, infine, previsti manufatti di connessione, derivazione e di regolazione idraulica minori in c.a. gettato in opera, quali nodi di derivazione, gruppi di consegna comiziale, pozzetti di intercettazione, di sfiato e di scarico, caratterizzati da una minore rilevanza strutturale, nonché strutture di servizio dei manufatti di regolazione realizzate in carpenteria metallica aventi limitata superficie in pianta e altezza fuori terra. In tal senso, relativamente ai presenti manufatti, trattandosi di opere minori, con dimensioni e geometria di limitata importanza, non sono stati effettuati calcoli di verifica e dimensionamento specifici, ritenendo, in tal senso, più che sufficiente e consona l'assunzione di armature compatibili con le percentuali minime previste da normativa e conformi a dettagli costruttivi delle N.T.C.-2018. Si è, inoltre, fatto riferimento a comprovate esperienze costruttive assunte nella progettazione e direzione lavori di manufatti analoghi per forma, dimensioni, geometria, azioni agenti e funzionalità.

Per quanto riguarda la geometria e le sezioni strutturali di dette opere si rimanda agli specifici elaborati grafici di progetto.

8.3 Fronti scavo per l'esecuzione delle opere

Il presente paragrafo riporta i risultati delle verifiche di stabilità dei fronti scavo provvisori per l'esecuzione dei lavori in funzione dei seguenti range di profondità:

- H scavo ≤ 2,0 m.
- H scavo ≤ 3,0 m.
- H scavo ≤ 4,0 m.
- H scavo ≤ 5,0 m.

Con riferimento agli elaborati grafici di progetto si è, dunque, proceduto alla verifica delle sezioni di scavo per la posa in opera delle condotte irrigue e la realizzazione dei vari manufatti minori di regolazione idraulica per altezze di scavo variabili da un minimo di circa 2,0 m ad un massimo di circa 4,0 m ed un'inclinazione delle sponde congiuntamente variabile. In corrispondenza del ciglio superiore degli scavi è stato applicato un sovraccarico distribuito pari a 10,0 kN/m^2 dovuto allo stazionamento e/o al transito provvisorio dei mezzi d'opera in ambito cantieristico o allo stoccaggio temporaneo dei materiali e delle attrezzature per l'esecuzione dei lavori.

Le verifiche sono state trattate in termini di tensioni efficaci considerando, cautelativamente la falda a circa -2,0 m dal piano campagna sul lato di monte dello scavo e il suo drenaggio su quello di valle (interno scavo).

Trattandosi di opere provvisorie la cui durata progettualmente prevista è inferiore ai 2 anni, in relazione a quanto previsto al *paragrafo 2.4.1* delle N.T.C.-2008, nei calcoli non sono state considerate le azioni e le verifiche di tipo sismico.

Ai fini dei calcoli è stato considerato un valore di coesione pari a 10 kPa (0,1 kg/cm^2).

Si riportato, quindi, nel seguito i risultati ottenuti sulla base dei criteri di verifica descritti al *paragrafo 7.5* della presente relazione e del *Capitolo 6* delle N.T.C.-2018, per la **combinazione A2+M2+R2,** prevedendo l'opportuna riduzione dei parametri geotecnici del terreno e delle resistenze.

FRONTE SCAVO H = 2,0 m – combinazione A2+M2+R2

Altezza complessiva dello scavo (H):	2.00	[m]
Profondità del substrato (D)	-	[m]
(n.b. : quando φ' = 0, la superficie critica risulta tangente al substrato, nel caso si volesse comunque verificare il cerchio di piede inserire "toe"; per φ' > 0 essendo D non essenziale, inserire 0,00 o "-")		
Inclinazione media del taglio sull'orizzontale (β):	60.00	[°]
Coesione netta del terreno c' (con applicazione coefficiente M2) (n.b. :c' > 0):	8.00	[kPa]
Angolo di attrito netto del terreno (ϕ') (con applicazione coefficiente M2):	23.00	[°]
Peso di unità di volume del terreno (γ):	19.00	[kN/m³]
Altezza dell'acqua rispetto al piede del taglio (H_{fw}) (n.b.:Hfw ≤ H):	-2.00	[m]
Peso di unità di volume dell'acqua (γ_w)	10.00	[kN/m³]
Sovraccarico uniforme sul ciglio superiore del taglio (q):	10.00	[kPa]
Livello dell'acqua che sommerge il taglio (Hw) (n.b.:Hw ≤ H):	0.00	[m]
Altezza della "tension crack" (Ht):	0.00	[m]
Presenza di acqua nella "tension crack" u(Ht)	no	[m]

VERIFICHE DI STABILITA':

* verifica in tensioni efficaci :
  λ=(γ H+q-γw Hfw)tgφ/(c μq μ'w); N=f(λ; β)
* verifica in tensioni totali : N = f(β; d)
* coeff. sovraccarico : μq = f(β; q/γh)
* coeff. sommersione : μw = f(β; Hw/H)
* coeff. filtrazione : μ'w = f(β; Hfw/H)
* coeff. tension crack : μt = f(β; Ht/H)

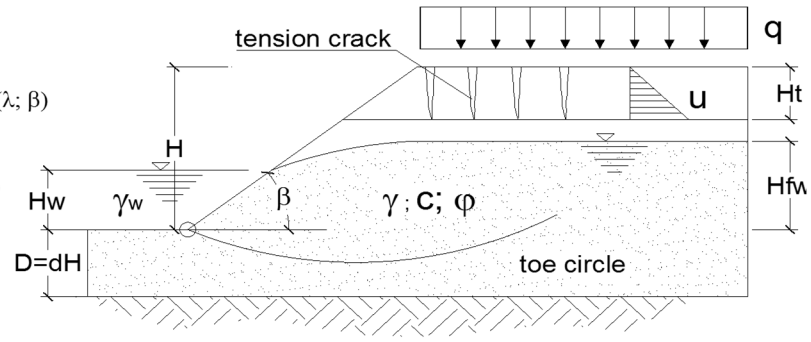

Riepilogo coefficienti

μq(β)	μw(β)	μ'w(β)	μt(β)	λ	No
0.888	1.000	1.000	1.000	4.06	10.310

Coefficiente di sicurezza N.T.C.-2008

$Fs = \mu_q \ \mu_w \ \mu_t \ N c/(\gamma H + q - \gamma_w H_w) / \gamma_R$

Fs = 1.39

Tale valore del coefficiente di sicurezza può essere ritenuto compatibile con le situazioni cantieristiche di scavo provvisorio.

FRONTE SCAVO H = 3,0 m – combinazione A2+M2+R2

Altezza complessiva dello scavo (H):	3.00	[m]
Profondità del substrato (D)	-	[m]
(n.b. : quando φ' = 0, la superficie critica risulta tangente al substrato, nel caso si volesse comunque verificare il cerchio di piede inserire "toe"; per φ' > 0 essendo D non essenziale, inserire 0,00 o "-")		
Inclinazione media del taglio sull'orizzontale (β):	45.00	[°]
Coesione netta del terreno c' (con applicazione coefficiente M2) (n.b. :c' > 0):	8.00	[kPa]
Angolo di attrito netto del terreno (ϕ') (con applicazione coefficiente M2):	23.00	[°]
Peso di unità di volume del terreno (γ):	19.00	[kN/m³]
Altezza dell'acqua rispetto al piede del taglio (H_{fw}) (n.b.:Hfw ≤ H):	-2.00	[m]
Peso di unità di volume dell'acqua (γ_w)	10.00	[kN/m³]
Sovraccarico uniforme sul ciglio superiore del taglio (q):	10.00	[kPa]
Livello dell'acqua che sommerge il taglio (Hw) (n.b.:Hw ≤ H):	0.00	[m]
Altezza della "tension crack" (Ht):	0.00	[m]
Presenza di acqua nella "tension crack" u(Ht)	no	[m]

VERIFICHE DI STABILITA':

* verifica in tensioni efficaci :
  λ=(γ H+q-γw Hfw)tgφ/(c μq μ'w); N=f(λ; β)
* verifica in tensioni totali : N = f(β; d)
* coeff. sovraccarico : μq = f(β; q/γh)
* coeff. sommersione : μw = f(β; Hw/H)
* coeff. filtrazione : μ'w = f(β; Hfw/H)
* coeff. tension crack : μt = f(β; Ht/H)

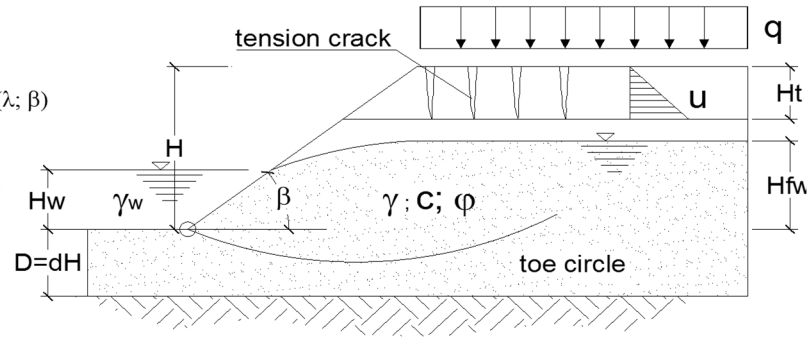

Riepilogo coefficienti

μq(β)	μw(β)	μ'w(β)	μt(β)	λ	No
0.937	1.000	1.000	1.000	4.93	13.877

Coefficiente di sicurezza N.T.C.-2008

$Fs = \mu_q \ \mu_w \ \mu_t \ N c/(\gamma H + q - \gamma_w H_w) / \gamma_R$

Fs = 1.41

Tale valore del coefficiente di sicurezza può essere ritenuto compatibile con le situazioni cantieristiche di scavo provvisorio.

FRONTE SCAVO H = 4,0 m – combinazione A2+M2+R2

Altezza complessiva dello scavo (H):	4.00	[m]
Profondità del substrato (D)	-	[m]
(n.b. : quando φ' = 0, la superficie critica risulta tangente al substrato, nel caso si volesse comunque verificare il cerchio di piede inserire "toe"; per φ' > 0 essendo D non essenziale, inserire 0,00 o "-")		
Inclinazione media del taglio sull'orizzontale (β):	38.00	[°]
Coesione netta del terreno c' (con applicazione coefficiente M2) (n.b. :c' > 0):	8.00	[kPa]
Angolo di attrito netto del terreno (ϕ') (con applicazione coefficiente M2):	23.00	[°]
Peso di unità di volume del terreno (γ):	19.00	[kN/m³]
Altezza dell'acqua rispetto al piede del taglio (H_{fw}) (n.b.:Hfw ≤ H):	-2.00	[m]
Peso di unità di volume dell'acqua (γ_w)	10.00	[kN/m³]
Sovraccarico uniforme sul ciglio superiore del taglio (q):	10.00	[kPa]
Livello dell'acqua che sommerge il taglio (Hw) (n.b.:Hw ≤ H):	0.00	[m]
Altezza della "tension crack" (Ht):	0.00	[m]
Presenza di acqua nella "tension crack" u(Ht)	no	[m]

VERIFICHE DI STABILITA':

* verifica in tensioni efficaci :
  λ=(γ H+q-γw Hfw)tgφ/(c μq μ'w); N=f(λ; β)
* verifica in tensioni totali : N = f(β; d)
* coeff. sovraccarico : μq = f(β; q/γh)
* coeff. sommersione : μw = f(β; Hw/H)
* coeff. filtrazione : μ'w = f(β; Hfw/H)
* coeff. tension crack : μt = f(β; Ht/H)

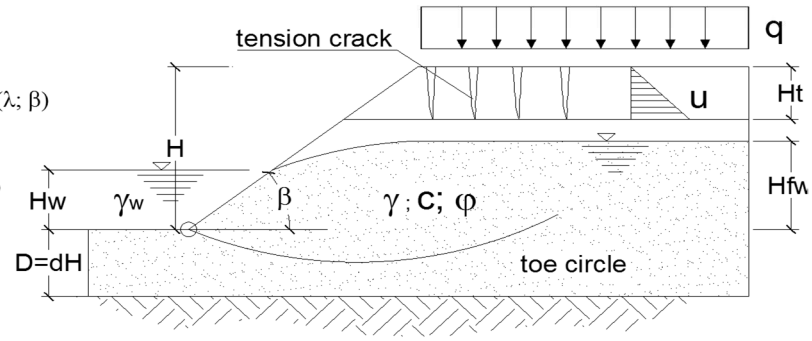

Riepilogo coefficienti

μq(β)	μw(β)	μ'w(β)	μt(β)	λ	No
0.959	1.000	1.000	1.000	5.87	17.426

Coefficiente di sicurezza N.T.C.-2008

$Fs = \mu_q \ \mu_w \ \mu_t \ N c/(\gamma H + q - \gamma_w H_w) / \gamma_R$

Fs = 1.41

Tale valore del coefficiente di sicurezza può essere ritenuto compatibile con le situazioni cantieristiche di scavo provvisorio.

FRONTE SCAVO H = 5,0 m – combinazione A2+M2+R2

Altezza complessiva dello scavo (H):	5.00	[m]
Profondità del substrato (D)	-	[m]
(n.b. : quando φ' = 0, la superficie critica risulta tangente al substrato, nel caso si volesse comunque verificare il cerchio di piede inserire "toe"; per φ' > 0 essendo D non essenziale, inserire 0,00 o "-")		
Inclinazione media del taglio sull'orizzontale (β):	33.00	[°]
Coesione netta del terreno c' (con applicazione coefficiente M2) (n.b. :c' > 0):	8.00	[kPa]
Angolo di attrito netto del terreno (ϕ') (con applicazione coefficiente M2):	23.00	[°]
Peso di unità di volume del terreno (γ):	19.00	[kN/m³]
Altezza dell'acqua rispetto al piede del taglio (H_{fw}) (n.b.:Hfw ≤ H):	-2.00	[m]
Peso di unità di volume dell'acqua (γ_w)	10.00	[kN/m³]
Sovraccarico uniforme sul ciglio superiore del taglio (q):	10.00	[kPa]
Livello dell'acqua che sommerge il taglio (Hw) (n.b.:Hw ≤ H):	0.00	[m]
Altezza della "tension crack" (Ht):	0.00	[m]
Presenza di acqua nella "tension crack" u(Ht)	no	[m]

VERIFICHE DI STABILITA':

* verifica in tensioni efficaci :
  λ=(γ H+q-γw Hfw)tgφ/(c μq μ'w); N=f(λ; β)
* verifica in tensioni totali : N = f(β; d)
* coeff. sovraccarico : μq = f(β; q/γh)
* coeff. sommersione : μw = f(β; Hw/H)
* coeff. filtrazione : μ'w = f(β; Hfw/H)
* coeff. tension crack : μt = f(β; Ht/H)

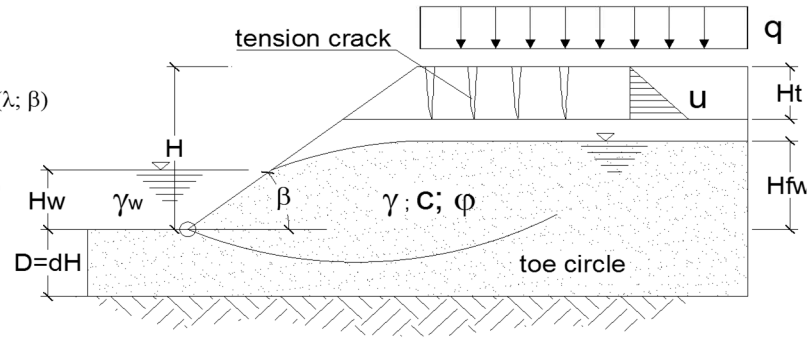

Riepilogo coefficienti

μq(β)	μw(β)	μ'w(β)	μt(β)	λ	No
0.971	1.000	1.000	1.000	6.83	20.959

Coefficiente di sicurezza N.T.C.-2008

$Fs = \mu_q \ \mu_w \ \mu_t \ N c/(\gamma H + q - \gamma_w H_w) / \gamma_R$

Fs = 1.41

Tale valore del coefficiente di sicurezza può essere ritenuto compatibile con le situazioni cantieristiche di scavo provvisorio.

La tabella seguente riassume, infine, i risultati di calcolo e le verifiche geotecniche effettuate, le quali possono essere ritenute soddisfatte e, in tal senso, compatibili con le esigenze cantieristiche pertinenti ai lavori in progetto:

SINTESI VERIFICHE DI STABILITÀ DEI FRONTI SCAVO		
Profondità di scavo [m]	**Inclinazione media pareti di scavo [°] sulla verticale**	**F.S.**
2,0 m	≤ 60°	1,39 > 1,0
3,0 m	≤ 45°	1,41 > 1,0
4,0 m	≤ 38°	1,41 > 1,0
5,0 m	≤ 33°	1,41 > 1,0

Tabella 12 – Riepilogo dei risultati e delle verifiche dei fronti scavo.

Si evidenzia che le verifiche sopra riportate sono state svolte:

- considerando cautelativamente l'angolo di attrito del terreno pari a 28°, opportunamente ridotto mediante l'applicazione del coefficiente "M2" previsto dalle N.T.C.-2008 (combinazione A2+M2+R2);
- considerando prudenzialmente la soggiacenza di falda alla quota di -2,0 m dal piano campagna, per tenere in conto della potenziale influenza dell'acquifero nei punti maggiormente sfavorevoli, durante periodi caratterizzati da precipitazioni intense e/o prolungate.

Si evidenzia, inoltre ed in linea generale che, per scavi in trincea a fronte verticale di altezza superiore ai 2 m, nei quali sia prevista la permanenza, anche temporanea, di operai, e per scavi che ricadano in prossimità di eventuali manufatti esistenti, in dipendenza da situazioni a valenza locale, in fase di cantierizzazione ed esecuzione delle opere, potranno essere impartite da parte della Direzione Lavori e dal Coordinatore per la Sicurezza in Esecuzione prescrizioni particolari circa ulteriori accorgimenti da adottare per la risoluzione di situazioni di dettaglio, anche con riferimento alle effettive condizioni del terreno in sito al momento dei lavori, quali il ricorso a sagomatura e/o alla diminuzione dell'inclinazione delle pareti di scavo oppure all'armatura e/o puntellamenti provvisori di sostegno delle stesse, aventi adeguata estensione sia in altezza che in lunghezza, sulla base anche di quanto disposto dal CSE in fase esecutiva delle opere. Tali accorgimenti operativi di dettaglio rientrano nella normale attività cantieristica e nelle facoltà gestionali e direzionali del cantiere in capo alla D.L. e al CSE e, come tali, devono intendersi già compensate e incluse nell'importo globale dei lavori e ricomprese nelle singole lavorazioni e negli oneri per il costante mantenimento delle necessarie condizioni di sicurezza del cantiere e dei lavori da parte dell'impresa esecutrice, nonché per l'esecuzione delle opere secondo la regola dell'arte.

9. Valutazione dei risultati e validazione della modellazione

I risultati ottenuti con l'ausilio del modello di calcolo agli elementi finiti sono stati opportunamente confrontati con quelli ottenuti applicando modelli semplificati sia a scopo di riscontro numerico che al fine della validazione e della verifica di attendibilità dei risultati ottenuti secondo quanto previsto dal *paragrafo 10.2.1* del D.M. 17.01.2018 (N.T.C.-2018).

Le verifiche sono state, pertanto, in particolare svolte in riferimento all'edificio filtri e controllo irriguo, considerando i principali telai della costruzione con schema statico equivalente "*a trave iperstatiche a tre campate con estremità incastrate, soggette a carico uniforme*" e "*a portale iperstatico incastrato in fondazione, soggetto a carico uniforme*".

I diagrammi di sollecitazione ottenuti sono stati, quindi, confrontati sia qualitativamente sia quantitativamente, con i risultati numerici di calcolo ottenibili applicando le formule associate ai *diagrammi di sollecitazione* di letteratura secondo la *Scienza delle Costruzioni*.

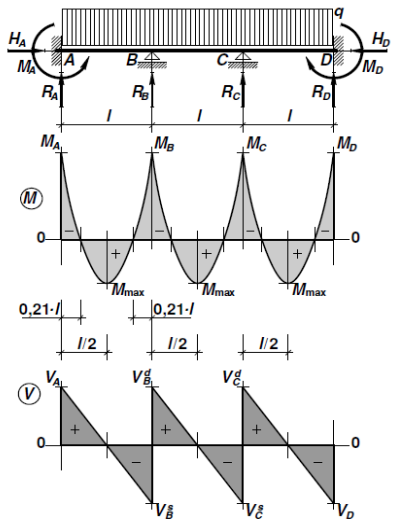

Reazioni $R_A = R_D = 0{,}50 \cdot q \cdot l$

$R_B = R_C = q \cdot l \qquad H_A = H_D = 0$

Taglio

$V_A = -V_D = 0{,}50 \cdot q \cdot l \qquad V_B^s = -V_C^d = -0{,}50 \cdot q \cdot l$

$V_B^d = -V_C^s = 0{,}50 \cdot q \cdot l$

Momenti flettenti

$$M_A = M_B = M_C = M_D = -\frac{1}{12} \cdot q \cdot l^2$$

campate AB, BC, CD: $\quad M_{\max}^{+} = \frac{1}{24} \cdot q \cdot l^2$

Freccia

$$f = 0{,}0029 \cdot \frac{q \cdot l^4}{E \cdot I}$$

Figura 22

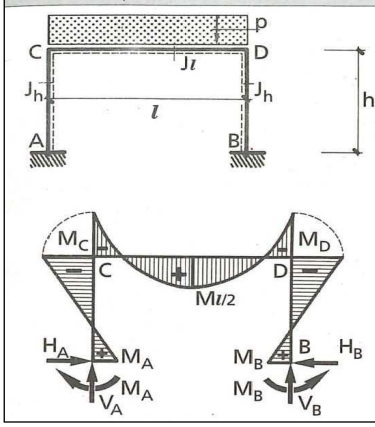

Carico uniforme sulla traversa

Reazioni

$$V_A = V_B = \frac{p \cdot l}{2}; \quad H_A = H_B = \frac{pl^2}{4h(2+k)}; \quad \text{dove } k = \frac{J_l}{J_h} \cdot \frac{h}{l}$$

$$M_A = M_B = \frac{pl^2}{12(2+k)}$$

Momenti

$$M_C = M_D = -\frac{pl^2}{6(2+k)}$$

$$M_{l/2} = \frac{pl^2}{8} - \frac{pl^2}{6(2+k)}$$

Figura 23

Figure 22 e 23 – Diagrammi di sollecitazione S.d.C.: schemi statici equivalenti semplificati.

A tal fine sono stati predisposti due modelli di calcolo semplificati secondo i suddetti schemi statici, adottando le geometrie e le caratteristiche delle sezioni del telaio in progetto (h = 3,0; l = 3,8; sezione corrente telaio cm 30 x 30 – pilastri + cordolo), i cui elementi, per semplicità di calcolo, sono stati assoggettati al solo peso proprio.

Dai suddetti modelli semplificati si ottengono, quindi, i seguenti valori di sollecitazione a momento flettente a SLE:

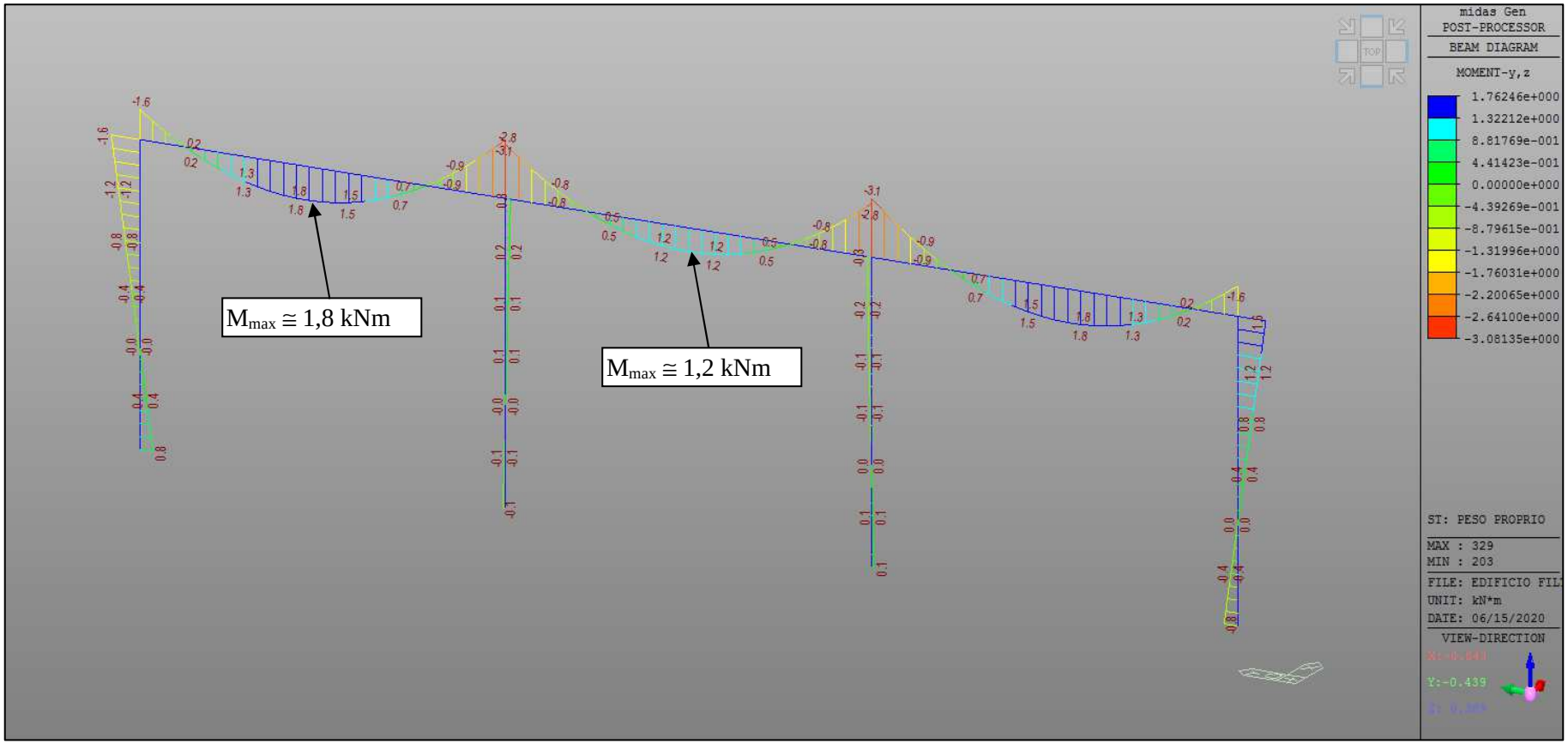

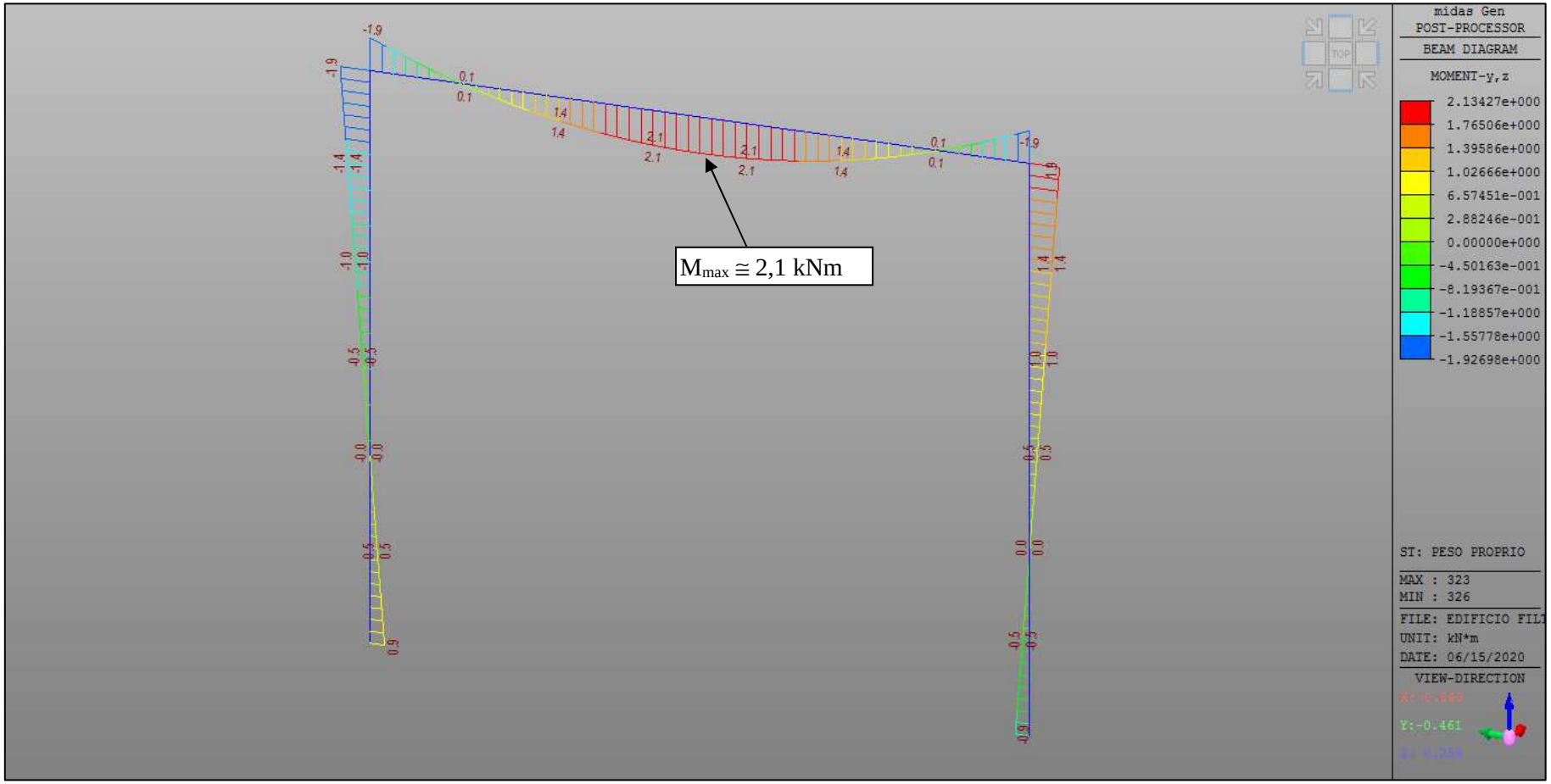
$M_{max} \cong 2,1$ kNm
midas Gen
POST-PROCESSOR
BEAM DIAGRAM
MOMENT-y,z
2.13427e+000
1.76506e+000
1.39586e+000
1.02666e+000
6.57451e-001
2.88246e-001
0.00000e+000
-4.50163e-001
-8.19367e-001
-1.18857e+000
-1.55778e+000
-1.92698e+000
ST: PESO PROPRIO
MAX : 323
MIN : 326
FILE: EDIFICIO FIL1
UNIT: kN*m
DATE: 06/15/2020
VIEW-DIRECTION
Y:-0.461

Con riferimento, quindi, al diagramma di sollecitazione relativo allo schema statico di portale iperstatico incastrato in fondazione (*figura 23*), si ottengono i seguenti valori di sollecitazione:

$$M_{max} = M_{l/2} = [2{,}25\ kN/m^3 \cdot 3{,}8^2 / 8] - [2{,}25\ kN/m^3 \cdot 3{,}8^2 / (6 \cdot (2+3{,}0 / 3{,}8))]$$

$$\mathbf{M_{max} = M_{l/2}} \cong 4{,}06\ kNm - 1{,}94\ kNm \cong \mathbf{2{,}1\ kNm}$$

Dal confrontato dei risultati ottenuti mediante i modelli di valutazione semplificata con quelli desunti dai modelli ad elementi finiti si può, dunque, evidenziare una sostanziale congruenza ed omogeneità dell'andamento dei diagrammi di sollecitazione di calcolo ed una sostanziale congruità ed analogia dei valori di calcolo delle sollecitazioni a meno di una limitata ed accettabile tolleranza di calcolo, comunque contenuta entro il 5%.

L'andamento qualitativo dei diagrammi di sollecitazione ottenuto mediante il modello di calcolo agli elementi finiti risulta, inoltre, congruente rispetto ai diagrammi relativi agli schemi statici semplificati e noti secondo la Scienza delle Costruzioni, in particolare con riferimento ai diagrammi di *figura 22*.

Si è, inoltre, provveduto alla verifica di compatibilità dei risultati geotecnici mediante la stima semplificata dei cedimenti della costruzione a SLE con il metodo di *Burland and Burbidge* descritto al *paragrafo 7.3*, considerando la compattazione preventiva del piano di sottofondazione e la bonifica preliminare dello stesso con materiale inerte debitamente compattato e costipato meccanicamente, per uno spessore di circa 50 cm, in modo da ottenere un indice di compressibilità correlato a valori di N_{spt} riferiti allo strato più superficiale, a diretto contatto con la fondazione, almeno pari a 30.

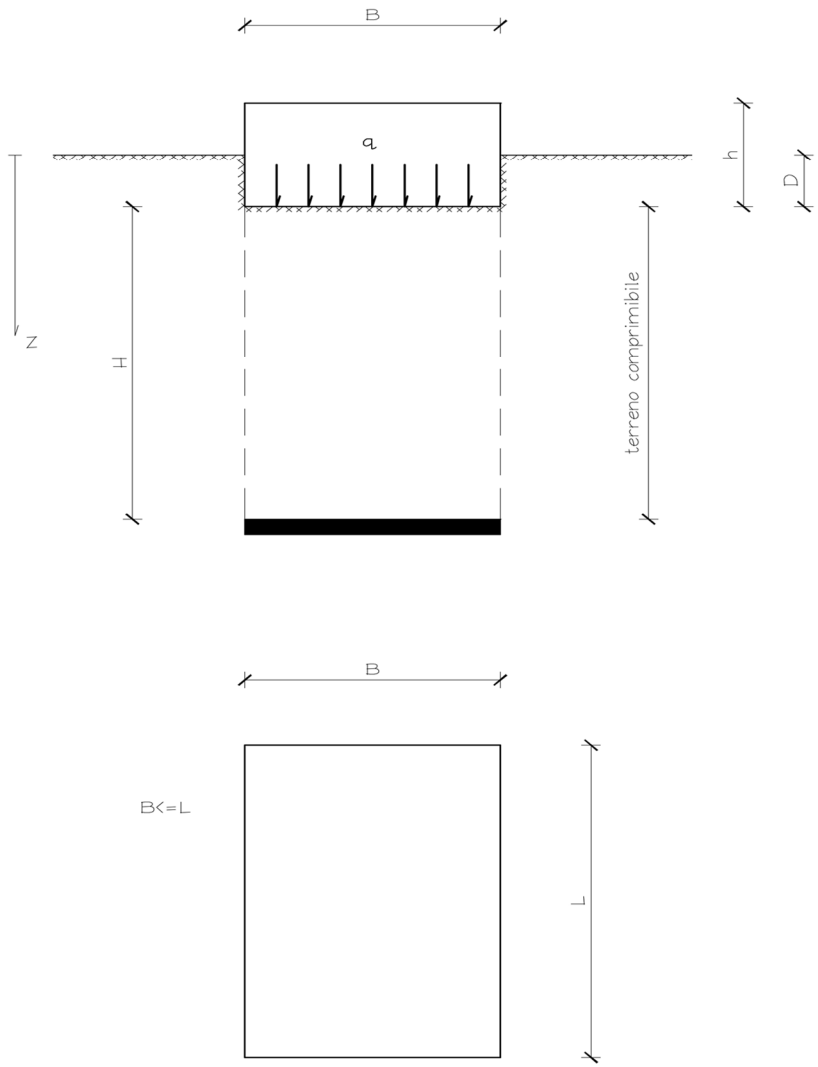

N (colpi/30 cm)	**30**		

1) Valore medio nell'ambito della profondità d'influenza (grafico allegato a destra, se N cresce con la profondità)
2) Valore medio nell'ambito della profondità d'influenza (pari a 2B, se N decresce c

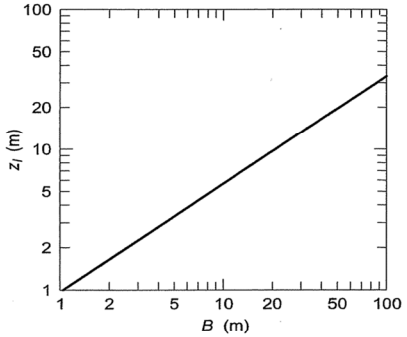

z_I (m)	7.00	z_I (cm)	700	profondità d'influenza
Ic	**0.015**	INDICE DI COMPRESSIBILITA'		

B (m)	11.60	B (cm)	1'160
L (m)	13.70	L (cm)	1'370
D (m)	0.00	D (cm)	0
H (m)	7.00	H (cm)	700

$s_{immediato}$ (mm)	**4.22**
s_t (mm)	**6.51**

TIPO CARICO	1	1 (CARICO STATICO) 2 (CARICO DINAMICO)

q (daN/m^2)	4'900	q (daN/cm^2)	0.4900	q (KN/m^2)	49.00
γ_{sup} (daN/m^3)	1'900	γ_{sup} (daN/cm^3)	0.001900		
		σ'_{v0} (daN/cm^2)	0.00	σ'_{v0} (KN/m^2)	0

fs (cal)	1.06	COEFFICIENTE DI FORMA
fs	1.06	

fH (cal)	1.00	COEFFICIENTE DI SPESSORE STRATO COMPRIMIBILE
fH	1.00	

t (>= 3 anni)	50.0	
ft (cal)	1.54	COEFFICIENTE EFFETTI DIFFERITI
ft	1.54	

Dai risultati ottenuti mediante il metodo semplificato si possono, quindi, stimare valori di cedimento massimo in fondazione di circa 4 mm, in linea con quelli ottenuti mediante il modello di calcolo ad elementi finiti. I cedimenti differenziali a lungo termine (50 anni) nell'ambito della superficie della platea di fondazione si mantengono, inoltre, nell'ordine di pochi millimetri (circa 2 mm). Tali valori, anche con riferimento ai coefficienti di sicurezza assunti ed in relazione alla normativa vigente e alla letteratura tecnica in materia di costruzioni possono, dunque, essere ritenuti del tutto compatibili ed ammissibili per l'esercizio e la funzionalità dell'opera.

Visto e considerato quanto sopra riportato si può, dunque, concludere che i risultati ottenuti dalla modellazione dell'edificio filtri e controllo con l'ausilio del codice di calcolo numerico agli elementi finiti "Midas Gen" possano ritenersi accettabili e compatibili con le risultanze delle analisi semplificate, sia dal punto di vista strutturale che geotecnico e, come tali, attendibili e validabili a tutti gli effetti ai sensi del paragrafo 10.2.1 delle N.T.C.-2018.

ALLEGATO 1

TABULATI DI CALCOLO DATI DI INPUT

*** PROJECT INFORMATION

Project Name :
Date : 2020/6/15

*** CONTROL DATA

Panel Zone Effect : Do not Calculate
Unit System : KN, M
Definition of Frame
- X Direction of Frame : Braced I Non-sway
- Y Direction of Frame : Braced I Non-sway
- Design Type : 3-D

Design Code
- Steel : Eurocode3:05
- Concrete : Eurocode2:04
- SRC : SSRC79

*** LOAD CASE DATA

NO	NAME	TYPE	SELF WEIGHT FACTOR X	Y	Z	DESCRIPTION
1	Peso proprio	D	0.000	0.000	-1.000	Peso proprio
2	Sovraccarichi varia~	L	0.000	0.000	0.000	Sovraccarichi variabili
4	Vento	W	0.000	0.000	0.000	Vento
5	Neve	S	0.000	0.000	0.000	Neve
6	Permanenti portati	D	0.000	0.000	0.000	Permanenti portati

*** MATERIAL PROPERTY DATA

NO	NAME	TYPE		MODULUS OF ELASTICITY	SHEAR MODULUS	THERMAL COEFF.	POISSON RATIO	WEIGHT DENSITY
1	C25/30	CONC		3.148e+007	1.311e+007	5.556e-006	0.2	25

NO	NAME	TYPE	STRENGTH OF DESIGN MATERIAL STEEL	CONCRETE	MAIN REBAR	SUB REBAR
1	C25/30	CONC	-	2.5e+004	4e+005	4e+005

*** NODE DATA

NO	X	Y	Z	TEMPERATURE
1	0	0	0	0
2	11.6	0	0	0
3	11.6	13.7	0	0
4	0	13.7	0	0
5	1.15	1.15	0	0
6	5.8	1.15	0	0
7	10.45	1.15	0	0
8	1.15	4.95	0	0
9	5.8	4.95	0	0
10	10.45	4.95	0	0
11	1.15	8.75	0	0
12	5.8	8.75	0	0
13	10.45	8.75	0	0
14	1.15	12.55	0	0
15	5.8	12.55	0	0
16	10.45	12.55	0	0
17	0	1.15	0	0
18	0	4.95	0	0
19	0	8.75	0	0
20	0	12.55	0	0
21	11.6	1.15	0	0
22	11.6	4.95	0	0
23	11.6	8.75	0	0
24	11.6	12.55	0	0
25	1.15	13.7	0	0
26	5.8	13.7	0	0
27	10.45	13.7	0	0
28	1.15	0	0	0
29	5.8	0	0	0

30	10.45	0	0	0
31	0.575	12.55	0	0
32	0	13.13	0	0
33	0.575	13.13	0	0
34	1.15	13.13	0	0
35	0.575	13.7	0	0
36	11.02	12.55	0	0
37	10.45	13.13	0	0
38	11.02	13.13	0	0
39	11.6	13.13	0	0
40	11.02	13.7	0	0
41	0.575	0	0	0
42	0	0.575	0	0
43	0.575	0.575	0	0
44	1.15	0.575	0	0
45	0.575	1.15	0	0
46	11.02	0	0	0
47	10.45	0.575	0	0
48	11.02	0.575	0	0
49	11.6	0.575	0	0
50	11.02	1.15	0	0
51	1.731	12.55	0	0
52	2.313	12.55	0	0
53	2.894	12.55	0	0
54	3.475	12.55	0	0
55	4.056	12.55	0	0
56	4.638	12.55	0	0
57	5.219	12.55	0	0
58	1.731	13.13	0	0
59	2.313	13.13	0	0
60	2.894	13.13	0	0
61	3.475	13.13	0	0
62	4.056	13.13	0	0
63	4.638	13.13	0	0
64	5.219	13.13	0	0
65	5.8	13.13	0	0
66	1.731	13.7	0	0
67	2.313	13.7	0	0
68	2.894	13.7	0	0
69	3.475	13.7	0	0
70	4.056	13.7	0	0
71	4.638	13.7	0	0
72	5.219	13.7	0	0
73	6.381	12.55	0	0
74	6.962	12.55	0	0
75	7.544	12.55	0	0
76	8.125	12.55	0	0
77	8.706	12.55	0	0
78	9.287	12.55	0	0
79	9.869	12.55	0	0
80	6.381	13.13	0	0
81	6.962	13.13	0	0
82	7.544	13.13	0	0
83	8.125	13.13	0	0
84	8.706	13.13	0	0
85	9.287	13.13	0	0
86	9.869	13.13	0	0
87	6.381	13.7	0	0
88	6.962	13.7	0	0
89	7.544	13.7	0	0
90	8.125	13.7	0	0
91	8.706	13.7	0	0
92	9.287	13.7	0	0
93	9.869	13.7	0	0
94	1.731	0	0	0
95	2.313	0	0	0
96	2.894	0	0	0
97	3.475	0	0	0
98	4.056	0	0	0
99	4.638	0	0	0
100	5.219	0	0	0
101	1.731	0.575	0	0
102	2.313	0.575	0	0
103	2.894	0.575	0	0
104	3.475	0.575	0	0
105	4.056	0.575	0	0
106	4.638	0.575	0	0
107	5.219	0.575	0	0
108	5.8	0.575	0	0

109	1.731	1.15	0	0
110	2.313	1.15	0	0
111	2.894	1.15	0	0
112	3.475	1.15	0	0
113	4.056	1.15	0	0
114	4.638	1.15	0	0
115	5.219	1.15	0	0
116	6.381	0	0	0
117	6.962	0	0	0
118	7.544	0	0	0
119	8.125	0	0	0
120	8.706	0	0	0
121	9.287	0	0	0
122	9.869	0	0	0
123	6.381	0.575	0	0
124	6.962	0.575	0	0
125	7.544	0.575	0	0
126	8.125	0.575	0	0
127	8.706	0.575	0	0
128	9.287	0.575	0	0
129	9.869	0.575	0	0
130	6.381	1.15	0	0
131	6.962	1.15	0	0
132	7.544	1.15	0	0
133	8.125	1.15	0	0
134	8.706	1.15	0	0
135	9.287	1.15	0	0
136	9.869	1.15	0	0
137	0	1.693	0	0
138	0.575	1.693	0	0
139	1.15	1.693	0	0
140	0	2.236	0	0
141	0.575	2.236	0	0
142	1.15	2.236	0	0
143	0	2.779	0	0
144	0.575	2.779	0	0
145	1.15	2.779	0	0
146	0	3.321	0	0
147	0.575	3.321	0	0
148	1.15	3.321	0	0
149	0	3.864	0	0
150	0.575	3.864	0	0
151	1.15	3.864	0	0
152	0	4.407	0	0
153	0.575	4.407	0	0
154	1.15	4.407	0	0
155	0.575	4.95	0	0
156	0	5.493	0	0
157	0.575	5.493	0	0
158	1.15	5.493	0	0
159	0	6.036	0	0
160	0.575	6.036	0	0
161	1.15	6.036	0	0
162	0	6.579	0	0
163	0.575	6.579	0	0
164	1.15	6.579	0	0
165	0	7.121	0	0
166	0.575	7.121	0	0
167	1.15	7.121	0	0
168	0	7.664	0	0
169	0.575	7.664	0	0
170	1.15	7.664	0	0
171	0	8.207	0	0
172	0.575	8.207	0	0
173	1.15	8.207	0	0
174	0.575	8.75	0	0
175	0	9.293	0	0
176	0.575	9.293	0	0
177	1.15	9.293	0	0
178	0	9.836	0	0
179	0.575	9.836	0	0
180	1.15	9.836	0	0
181	0	10.38	0	0
182	0.575	10.38	0	0
183	1.15	10.38	0	0
184	0	10.92	0	0
185	0.575	10.92	0	0
186	1.15	10.92	0	0
187	0	11.46	0	0

188	0.575	11.46	0	0
189	1.15	11.46	0	0
190	0	12.01	0	0
191	0.575	12.01	0	0
192	1.15	12.01	0	0
193	10.45	1.693	0	0
194	11.02	1.693	0	0
195	11.6	1.693	0	0
196	10.45	2.236	0	0
197	11.02	2.236	0	0
198	11.6	2.236	0	0
199	10.45	2.779	0	0
200	11.02	2.779	0	0
201	11.6	2.779	0	0
202	10.45	3.321	0	0
203	11.02	3.321	0	0
204	11.6	3.321	0	0
205	10.45	3.864	0	0
206	11.02	3.864	0	0
207	11.6	3.864	0	0
208	10.45	4.407	0	0
209	11.02	4.407	0	0
210	11.6	4.407	0	0
211	11.02	4.95	0	0
212	10.45	5.493	0	0
213	11.02	5.493	0	0
214	11.6	5.493	0	0
215	10.45	6.036	0	0
216	11.02	6.036	0	0
217	11.6	6.036	0	0
218	10.45	6.579	0	0
219	11.02	6.579	0	0
220	11.6	6.579	0	0
221	10.45	7.121	0	0
222	11.02	7.121	0	0
223	11.6	7.121	0	0
224	10.45	7.664	0	0
225	11.02	7.664	0	0
226	11.6	7.664	0	0
227	10.45	8.207	0	0
228	11.02	8.207	0	0
229	11.6	8.207	0	0
230	11.02	8.75	0	0
231	10.45	9.293	0	0
232	11.02	9.293	0	0
233	11.6	9.293	0	0
234	10.45	9.836	0	0
235	11.02	9.836	0	0
236	11.6	9.836	0	0
237	10.45	10.38	0	0
238	11.02	10.38	0	0
239	11.6	10.38	0	0
240	10.45	10.92	0	0
241	11.02	10.92	0	0
242	11.6	10.92	0	0
243	10.45	11.46	0	0
244	11.02	11.46	0	0
245	11.6	11.46	0	0
246	10.45	12.01	0	0
247	11.02	12.01	0	0
248	11.6	12.01	0	0
249	1.15	1.15	3	0
250	10.45	1.15	3	0
251	1.15	4.95	3	0
252	10.45	4.95	3	0
253	1.15	8.75	3	0
254	10.45	8.75	3	0
255	1.15	12.55	3	0
256	10.45	12.55	3	0
257	5.8	1.15	4.5	0
258	5.8	4.95	4.5	0
259	5.8	8.75	4.5	0
260	5.8	12.55	4.5	0
261	1.15	12.55	2.5	0
262	1.15	12.55	2	0
263	1.15	12.55	1.5	0
264	1.15	12.55	1	0
265	1.15	12.55	0.5	0
266	1.15	8.75	2.5	0

267	1.15	8.75	2	0
268	1.15	8.75	1.5	0
269	1.15	8.75	1	0
270	1.15	8.75	0.5	0
271	1.15	4.95	2.5	0
272	1.15	4.95	2	0
273	1.15	4.95	1.5	0
274	1.15	4.95	1	0
275	1.15	4.95	0.5	0
276	1.15	1.15	2.5	0
277	1.15	1.15	2	0
278	1.15	1.15	1.5	0
279	1.15	1.15	1	0
280	1.15	1.15	0.5	0
281	10.45	12.55	2.5	0
282	10.45	12.55	2	0
283	10.45	12.55	1.5	0
284	10.45	12.55	1	0
285	10.45	12.55	0.5	0
286	10.45	8.75	2.5	0
287	10.45	8.75	2	0
288	10.45	8.75	1.5	0
289	10.45	8.75	1	0
290	10.45	8.75	0.5	0
291	10.45	4.95	2.5	0
292	10.45	4.95	2	0
293	10.45	4.95	1.5	0
294	10.45	4.95	1	0
295	10.45	4.95	0.5	0
296	10.45	1.15	2.5	0
297	10.45	1.15	2	0
298	10.45	1.15	1.5	0
299	10.45	1.15	1	0
300	10.45	1.15	0.5	0
301	5.8	12.55	4	0
302	5.8	12.55	3.5	0
303	5.8	12.55	3	0
304	5.8	12.55	2.5	0
305	5.8	12.55	2	0
306	5.8	12.55	1.5	0
307	5.8	12.55	1	0
308	5.8	12.55	0.5	0
309	5.8	8.75	4	0
310	5.8	8.75	3.5	0
311	5.8	8.75	3	0
312	5.8	8.75	2.5	0
313	5.8	8.75	2	0
314	5.8	8.75	1.5	0
315	5.8	8.75	1	0
316	5.8	8.75	0.5	0
317	5.8	4.95	4	0
318	5.8	4.95	3.5	0
319	5.8	4.95	3	0
320	5.8	4.95	2.5	0
321	5.8	4.95	2	0
322	5.8	4.95	1.5	0
323	5.8	4.95	1	0
324	5.8	4.95	0.5	0
325	5.8	1.15	4	0
326	5.8	1.15	3.5	0
327	5.8	1.15	3	0
328	5.8	1.15	2.5	0
329	5.8	1.15	2	0
330	5.8	1.15	1.5	0
331	5.8	1.15	1	0
332	5.8	1.15	0.5	0
333	1.667	12.55	3.167	0
334	2.183	12.55	3.333	0
335	2.7	12.55	3.5	0
336	3.217	12.55	3.667	0
337	3.733	12.55	3.833	0
338	4.25	12.55	4	0
339	4.767	12.55	4.167	0
340	5.283	12.55	4.333	0
341	6.317	12.55	4.333	0
342	6.833	12.55	4.167	0
343	7.35	12.55	4	0
344	7.867	12.55	3.833	0
345	8.383	12.55	3.667	0

346	8.9	12.55	3.5	0
347	9.417	12.55	3.333	0
348	9.933	12.55	3.167	0
349	5.283	1.15	4.333	0
350	4.767	1.15	4.167	0
351	4.25	1.15	4	0
352	3.733	1.15	3.833	0
353	3.217	1.15	3.667	0
354	2.7	1.15	3.5	0
355	2.183	1.15	3.333	0
356	1.667	1.15	3.167	0
357	6.317	1.15	4.333	0
358	6.833	1.15	4.167	0
359	7.35	1.15	4	0
360	7.867	1.15	3.833	0
361	8.383	1.15	3.667	0
362	8.9	1.15	3.5	0
363	9.417	1.15	3.333	0
364	9.933	1.15	3.167	0
365	1.15	12.01	3	0
366	1.15	11.46	3	0
367	1.15	10.92	3	0
368	1.15	10.38	3	0
369	1.15	9.836	3	0
370	1.15	9.293	3	0
371	1.15	8.207	3	0
372	1.15	7.664	3	0
373	1.15	7.121	3	0
374	1.15	6.579	3	0
375	1.15	6.036	3	0
376	1.15	5.493	3	0
377	1.15	4.407	3	0
378	1.15	3.864	3	0
379	1.15	3.321	3	0
380	1.15	2.779	3	0
381	1.15	2.236	3	0
382	1.15	1.693	3	0
383	10.45	12.01	3	0
384	10.45	11.46	3	0
385	10.45	10.92	3	0
386	10.45	10.38	3	0
387	10.45	9.836	3	0
388	10.45	9.293	3	0
389	10.45	8.207	3	0
390	10.45	7.664	3	0
391	10.45	7.121	3	0
392	10.45	6.579	3	0
393	10.45	6.036	3	0
394	10.45	5.493	3	0
395	10.45	4.407	3	0
396	10.45	3.864	3	0
397	10.45	3.321	3	0
398	10.45	2.779	3	0
399	10.45	2.236	3	0
400	10.45	1.693	3	0
401	1.731	1.693	0	0
402	2.313	1.693	0	0
403	2.894	1.693	0	0
404	3.475	1.693	0	0
405	4.056	1.693	0	0
406	4.638	1.693	0	0
407	5.219	1.693	0	0
408	5.8	1.693	0	0
409	1.731	2.236	0	0
410	2.313	2.236	0	0
411	2.894	2.236	0	0
412	3.475	2.236	0	0
413	4.056	2.236	0	0
414	4.638	2.236	0	0
415	5.219	2.236	0	0
416	5.8	2.236	0	0
417	1.731	2.779	0	0
418	2.313	2.779	0	0
419	2.894	2.779	0	0
420	3.475	2.779	0	0
421	4.056	2.779	0	0
422	4.638	2.779	0	0
423	5.219	2.779	0	0
424	5.8	2.779	0	0

425	1.731	3.321	0	0
426	2.313	3.321	0	0
427	2.894	3.321	0	0
428	3.475	3.321	0	0
429	4.056	3.321	0	0
430	4.638	3.321	0	0
431	5.219	3.321	0	0
432	5.8	3.321	0	0
433	1.731	3.864	0	0
434	2.313	3.864	0	0
435	2.894	3.864	0	0
436	3.475	3.864	0	0
437	4.056	3.864	0	0
438	4.638	3.864	0	0
439	5.219	3.864	0	0
440	5.8	3.864	0	0
441	1.731	4.407	0	0
442	2.313	4.407	0	0
443	2.894	4.407	0	0
444	3.475	4.407	0	0
445	4.056	4.407	0	0
446	4.638	4.407	0	0
447	5.219	4.407	0	0
448	5.8	4.407	0	0
449	1.731	4.95	0	0
450	2.313	4.95	0	0
451	2.894	4.95	0	0
452	3.475	4.95	0	0
453	4.056	4.95	0	0
454	4.638	4.95	0	0
455	5.219	4.95	0	0
456	6.381	1.693	0	0
457	6.962	1.693	0	0
458	7.544	1.693	0	0
459	8.125	1.693	0	0
460	8.706	1.693	0	0
461	9.287	1.693	0	0
462	9.869	1.693	0	0
463	6.381	2.236	0	0
464	6.962	2.236	0	0
465	7.544	2.236	0	0
466	8.125	2.236	0	0
467	8.706	2.236	0	0
468	9.287	2.236	0	0
469	9.869	2.236	0	0
470	6.381	2.779	0	0
471	6.962	2.779	0	0
472	7.544	2.779	0	0
473	8.125	2.779	0	0
474	8.706	2.779	0	0
475	9.287	2.779	0	0
476	9.869	2.779	0	0
477	6.381	3.321	0	0
478	6.962	3.321	0	0
479	7.544	3.321	0	0
480	8.125	3.321	0	0
481	8.706	3.321	0	0
482	9.287	3.321	0	0
483	9.869	3.321	0	0
484	6.381	3.864	0	0
485	6.962	3.864	0	0
486	7.544	3.864	0	0
487	8.125	3.864	0	0
488	8.706	3.864	0	0
489	9.287	3.864	0	0
490	9.869	3.864	0	0
491	6.381	4.407	0	0
492	6.962	4.407	0	0
493	7.544	4.407	0	0
494	8.125	4.407	0	0
495	8.706	4.407	0	0
496	9.287	4.407	0	0
497	9.869	4.407	0	0
498	6.381	4.95	0	0
499	6.962	4.95	0	0
500	7.544	4.95	0	0
501	8.125	4.95	0	0
502	8.706	4.95	0	0
503	9.287	4.95	0	0

504	9.869	4.95	0	0
505	1.731	5.493	0	0
506	2.313	5.493	0	0
507	2.894	5.493	0	0
508	3.475	5.493	0	0
509	4.056	5.493	0	0
510	4.638	5.493	0	0
511	5.219	5.493	0	0
512	5.8	5.493	0	0
513	1.731	6.036	0	0
514	2.313	6.036	0	0
515	2.894	6.036	0	0
516	3.475	6.036	0	0
517	4.056	6.036	0	0
518	4.638	6.036	0	0
519	5.219	6.036	0	0
520	5.8	6.036	0	0
521	1.731	6.579	0	0
522	2.313	6.579	0	0
523	2.894	6.579	0	0
524	3.475	6.579	0	0
525	4.056	6.579	0	0
526	4.638	6.579	0	0
527	5.219	6.579	0	0
528	5.8	6.579	0	0
529	1.731	7.121	0	0
530	2.313	7.121	0	0
531	2.894	7.121	0	0
532	3.475	7.121	0	0
533	4.056	7.121	0	0
534	4.638	7.121	0	0
535	5.219	7.121	0	0
536	5.8	7.121	0	0
537	1.731	7.664	0	0
538	2.313	7.664	0	0
539	2.894	7.664	0	0
540	3.475	7.664	0	0
541	4.056	7.664	0	0
542	4.638	7.664	0	0
543	5.219	7.664	0	0
544	5.8	7.664	0	0
545	1.731	8.207	0	0
546	2.313	8.207	0	0
547	2.894	8.207	0	0
548	3.475	8.207	0	0
549	4.056	8.207	0	0
550	4.638	8.207	0	0
551	5.219	8.207	0	0
552	5.8	8.207	0	0
553	1.731	8.75	0	0
554	2.313	8.75	0	0
555	2.894	8.75	0	0
556	3.475	8.75	0	0
557	4.056	8.75	0	0
558	4.638	8.75	0	0
559	5.219	8.75	0	0
560	6.381	5.493	0	0
561	6.962	5.493	0	0
562	7.544	5.493	0	0
563	8.125	5.493	0	0
564	8.706	5.493	0	0
565	9.287	5.493	0	0
566	9.869	5.493	0	0
567	6.381	6.036	0	0
568	6.962	6.036	0	0
569	7.544	6.036	0	0
570	8.125	6.036	0	0
571	8.706	6.036	0	0
572	9.287	6.036	0	0
573	9.869	6.036	0	0
574	6.381	6.579	0	0
575	6.962	6.579	0	0
576	7.544	6.579	0	0
577	8.125	6.579	0	0
578	8.706	6.579	0	0
579	9.287	6.579	0	0
580	9.869	6.579	0	0
581	6.381	7.121	0	0
582	6.962	7.121	0	0

583	7.544	7.121	0	0
584	8.125	7.121	0	0
585	8.706	7.121	0	0
586	9.287	7.121	0	0
587	9.869	7.121	0	0
588	6.381	7.664	0	0
589	6.962	7.664	0	0
590	7.544	7.664	0	0
591	8.125	7.664	0	0
592	8.706	7.664	0	0
593	9.287	7.664	0	0
594	9.869	7.664	0	0
595	6.381	8.207	0	0
596	6.962	8.207	0	0
597	7.544	8.207	0	0
598	8.125	8.207	0	0
599	8.706	8.207	0	0
600	9.287	8.207	0	0
601	9.869	8.207	0	0
602	6.381	8.75	0	0
603	6.962	8.75	0	0
604	7.544	8.75	0	0
605	8.125	8.75	0	0
606	8.706	8.75	0	0
607	9.287	8.75	0	0
608	9.869	8.75	0	0
609	1.731	9.293	0	0
610	2.313	9.293	0	0
611	2.894	9.293	0	0
612	3.475	9.293	0	0
613	4.056	9.293	0	0
614	4.638	9.293	0	0
615	5.219	9.293	0	0
616	5.8	9.293	0	0
617	1.731	9.836	0	0
618	2.313	9.836	0	0
619	2.894	9.836	0	0
620	3.475	9.836	0	0
621	4.056	9.836	0	0
622	4.638	9.836	0	0
623	5.219	9.836	0	0
624	5.8	9.836	0	0
625	1.731	10.38	0	0
626	2.313	10.38	0	0
627	2.894	10.38	0	0
628	3.475	10.38	0	0
629	4.056	10.38	0	0
630	4.638	10.38	0	0
631	5.219	10.38	0	0
632	5.8	10.38	0	0
633	1.731	10.92	0	0
634	2.313	10.92	0	0
635	2.894	10.92	0	0
636	3.475	10.92	0	0
637	4.056	10.92	0	0
638	4.638	10.92	0	0
639	5.219	10.92	0	0
640	5.8	10.92	0	0
641	1.731	11.46	0	0
642	2.313	11.46	0	0
643	2.894	11.46	0	0
644	3.475	11.46	0	0
645	4.056	11.46	0	0
646	4.638	11.46	0	0
647	5.219	11.46	0	0
648	5.8	11.46	0	0
649	1.731	12.01	0	0
650	2.313	12.01	0	0
651	2.894	12.01	0	0
652	3.475	12.01	0	0
653	4.056	12.01	0	0
654	4.638	12.01	0	0
655	5.219	12.01	0	0
656	5.8	12.01	0	0
657	6.381	9.293	0	0
658	6.962	9.293	0	0
659	7.544	9.293	0	0
660	8.125	9.293	0	0
661	8.706	9.293	0	0

662	9.287	9.293	0	0
663	9.869	9.293	0	0
664	6.381	9.836	0	0
665	6.962	9.836	0	0
666	7.544	9.836	0	0
667	8.125	9.836	0	0
668	8.706	9.836	0	0
669	9.287	9.836	0	0
670	9.869	9.836	0	0
671	6.381	10.38	0	0
672	6.962	10.38	0	0
673	7.544	10.38	0	0
674	8.125	10.38	0	0
675	8.706	10.38	0	0
676	9.287	10.38	0	0
677	9.869	10.38	0	0
678	6.381	10.92	0	0
679	6.962	10.92	0	0
680	7.544	10.92	0	0
681	8.125	10.92	0	0
682	8.706	10.92	0	0
683	9.287	10.92	0	0
684	9.869	10.92	0	0
685	6.381	11.46	0	0
686	6.962	11.46	0	0
687	7.544	11.46	0	0
688	8.125	11.46	0	0
689	8.706	11.46	0	0
690	9.287	11.46	0	0
691	9.869	11.46	0	0
692	6.381	12.01	0	0
693	6.962	12.01	0	0
694	7.544	12.01	0	0
695	8.125	12.01	0	0
696	8.706	12.01	0	0
697	9.287	12.01	0	0
698	9.869	12.01	0	0
699	5.8	12.01	4.5	0
700	5.8	11.46	4.5	0
701	5.8	10.92	4.5	0
702	5.8	10.38	4.5	0
703	5.8	9.836	4.5	0
704	5.8	9.293	4.5	0
705	5.8	8.207	4.5	0
706	5.8	7.664	4.5	0
707	5.8	7.121	4.5	0
708	5.8	6.579	4.5	0
709	5.8	6.036	4.5	0
710	5.8	5.493	4.5	0
711	5.8	4.407	4.5	0
712	5.8	3.864	4.5	0
713	5.8	3.321	4.5	0
714	5.8	2.779	4.5	0
715	5.8	2.236	4.5	0
716	5.8	1.693	4.5	0

** POINT SPRING SUPPORT

NODE	TRANSLATIONAL DIRECTION			ROTATIONAL DIRECTION		
	SDx	SDy	SDz	SRx	SRy	SRz
1	1653.1250	1653.1250	826.5625	0.0000	0.0000	0.0000
2	1653.1250	1653.1250	826.5625	0.0000	0.0000	0.0000
3	1653.1250	1653.1250	826.5625	0.0000	0.0000	0.0000
4	1653.1250	1653.1250	826.5625	0.0000	0.0000	0.0000
5	6462.6116	6462.6116	3231.3058	0.0000	0.0000	0.0000
6	6497.5446	6497.5446	3248.7723	0.0000	0.0000	0.0000
7	6462.6116	6462.6116	3231.3058	0.0000	0.0000	0.0000
8	6276.7857	6276.7857	3138.3929	0.0000	0.0000	0.0000
9	6310.7143	6310.7143	3155.3571	0.0000	0.0000	0.0000
10	6276.7857	6276.7857	3138.3929	0.0000	0.0000	0.0000
11	6276.7857	6276.7857	3138.3929	0.0000	0.0000	0.0000
12	6310.7143	6310.7143	3155.3571	0.0000	0.0000	0.0000
13	6276.7857	6276.7857	3138.3929	0.0000	0.0000	0.0000
14	6462.6116	6462.6116	3231.3058	0.0000	0.0000	0.0000
15	6497.5446	6497.5446	3248.7723	0.0000	0.0000	0.0000
16	6462.6116	6462.6116	3231.3058	0.0000	0.0000	0.0000
17	3213.8393	3213.8393	1606.9196	0.0000	0.0000	0.0000

18	3121.4286	3121.4286	1560.7143	0.0000	0.0000	0.0000
19	3121.4286	3121.4286	1560.7143	0.0000	0.0000	0.0000
20	3213.8393	3213.8393	1606.9196	0.0000	0.0000	0.0000
21	3213.8393	3213.8393	1606.9196	0.0000	0.0000	0.0000
22	3121.4286	3121.4286	1560.7143	0.0000	0.0000	0.0000
23	3121.4286	3121.4286	1560.7143	0.0000	0.0000	0.0000
24	3213.8393	3213.8393	1606.9196	0.0000	0.0000	0.0000
25	3324.2187	3324.2187	1662.1094	0.0000	0.0000	0.0000
26	3342.1875	3342.1875	1671.0937	0.0000	0.0000	0.0000
27	3324.2187	3324.2187	1662.1094	0.0000	0.0000	0.0000
28	3324.2188	3324.2188	1662.1094	0.0000	0.0000	0.0000
29	3342.1875	3342.1875	1671.0937	0.0000	0.0000	0.0000
30	3324.2188	3324.2188	1662.1094	0.0000	0.0000	0.0000
31	6427.6786	6427.6786	3213.8393	0.0000	0.0000	0.0000
32	3306.2500	3306.2500	1653.1250	0.0000	0.0000	0.0000
33	6612.5000	6612.5000	3306.2500	0.0000	0.0000	0.0000
34	6648.4375	6648.4375	3324.2188	0.0000	0.0000	0.0000
35	3306.2500	3306.2500	1653.1250	0.0000	0.0000	0.0000
36	6427.6786	6427.6786	3213.8393	0.0000	0.0000	0.0000
37	6648.4375	6648.4375	3324.2188	0.0000	0.0000	0.0000
38	6612.5000	6612.5000	3306.2500	0.0000	0.0000	0.0000
39	3306.2500	3306.2500	1653.1250	0.0000	0.0000	0.0000
40	3306.2500	3306.2500	1653.1250	0.0000	0.0000	0.0000
41	3306.2500	3306.2500	1653.1250	0.0000	0.0000	0.0000
42	3306.2500	3306.2500	1653.1250	0.0000	0.0000	0.0000
43	6612.5000	6612.5000	3306.2500	0.0000	0.0000	0.0000
44	6648.4375	6648.4375	3324.2188	0.0000	0.0000	0.0000
45	6427.6786	6427.6786	3213.8393	0.0000	0.0000	0.0000
46	3306.2500	3306.2500	1653.1250	0.0000	0.0000	0.0000
47	6648.4375	6648.4375	3324.2188	0.0000	0.0000	0.0000
48	6612.5000	6612.5000	3306.2500	0.0000	0.0000	0.0000
49	3306.2500	3306.2500	1653.1250	0.0000	0.0000	0.0000
50	6427.6786	6427.6786	3213.8393	0.0000	0.0000	0.0000
51	6497.5446	6497.5446	3248.7723	0.0000	0.0000	0.0000
52	6497.5446	6497.5446	3248.7723	0.0000	0.0000	0.0000
53	6497.5446	6497.5446	3248.7723	0.0000	0.0000	0.0000
54	6497.5446	6497.5446	3248.7723	0.0000	0.0000	0.0000
55	6497.5446	6497.5446	3248.7723	0.0000	0.0000	0.0000
56	6497.5446	6497.5446	3248.7723	0.0000	0.0000	0.0000
57	6497.5446	6497.5446	3248.7723	0.0000	0.0000	0.0000
58	6684.3750	6684.3750	3342.1875	0.0000	0.0000	0.0000
59	6684.3750	6684.3750	3342.1875	0.0000	0.0000	0.0000
60	6684.3750	6684.3750	3342.1875	0.0000	0.0000	0.0000
61	6684.3750	6684.3750	3342.1875	0.0000	0.0000	0.0000
62	6684.3750	6684.3750	3342.1875	0.0000	0.0000	0.0000
63	6684.3750	6684.3750	3342.1875	0.0000	0.0000	0.0000
64	6684.3750	6684.3750	3342.1875	0.0000	0.0000	0.0000
65	6684.3750	6684.3750	3342.1875	0.0000	0.0000	0.0000
66	3342.1875	3342.1875	1671.0937	0.0000	0.0000	0.0000
67	3342.1875	3342.1875	1671.0937	0.0000	0.0000	0.0000
68	3342.1875	3342.1875	1671.0937	0.0000	0.0000	0.0000
69	3342.1875	3342.1875	1671.0937	0.0000	0.0000	0.0000
70	3342.1875	3342.1875	1671.0937	0.0000	0.0000	0.0000
71	3342.1875	3342.1875	1671.0937	0.0000	0.0000	0.0000
72	3342.1875	3342.1875	1671.0937	0.0000	0.0000	0.0000
73	6497.5446	6497.5446	3248.7723	0.0000	0.0000	0.0000
74	6497.5446	6497.5446	3248.7723	0.0000	0.0000	0.0000
75	6497.5446	6497.5446	3248.7723	0.0000	0.0000	0.0000
76	6497.5446	6497.5446	3248.7723	0.0000	0.0000	0.0000
77	6497.5446	6497.5446	3248.7723	0.0000	0.0000	0.0000
78	6497.5446	6497.5446	3248.7723	0.0000	0.0000	0.0000
79	6497.5446	6497.5446	3248.7723	0.0000	0.0000	0.0000
80	6684.3750	6684.3750	3342.1875	0.0000	0.0000	0.0000
81	6684.3750	6684.3750	3342.1875	0.0000	0.0000	0.0000
82	6684.3750	6684.3750	3342.1875	0.0000	0.0000	0.0000
83	6684.3750	6684.3750	3342.1875	0.0000	0.0000	0.0000
84	6684.3750	6684.3750	3342.1875	0.0000	0.0000	0.0000
85	6684.3750	6684.3750	3342.1875	0.0000	0.0000	0.0000
86	6684.3750	6684.3750	3342.1875	0.0000	0.0000	0.0000
87	3342.1875	3342.1875	1671.0937	0.0000	0.0000	0.0000
88	3342.1875	3342.1875	1671.0937	0.0000	0.0000	0.0000
89	3342.1875	3342.1875	1671.0937	0.0000	0.0000	0.0000
90	3342.1875	3342.1875	1671.0937	0.0000	0.0000	0.0000
91	3342.1875	3342.1875	1671.0937	0.0000	0.0000	0.0000
92	3342.1875	3342.1875	1671.0937	0.0000	0.0000	0.0000
93	3342.1875	3342.1875	1671.0937	0.0000	0.0000	0.0000
94	3342.1875	3342.1875	1671.0938	0.0000	0.0000	0.0000
95	3342.1875	3342.1875	1671.0937	0.0000	0.0000	0.0000
96	3342.1875	3342.1875	1671.0938	0.0000	0.0000	0.0000

97	3342.1875	3342.1875	1671.0938	0.0000	0.0000	0.0000
98	3342.1875	3342.1875	1671.0938	0.0000	0.0000	0.0000
99	3342.1875	3342.1875	1671.0937	0.0000	0.0000	0.0000
100	3342.1875	3342.1875	1671.0938	0.0000	0.0000	0.0000
101	6684.3750	6684.3750	3342.1875	0.0000	0.0000	0.0000
102	6684.3750	6684.3750	3342.1875	0.0000	0.0000	0.0000
103	6684.3750	6684.3750	3342.1875	0.0000	0.0000	0.0000
104	6684.3750	6684.3750	3342.1875	0.0000	0.0000	0.0000
105	6684.3750	6684.3750	3342.1875	0.0000	0.0000	0.0000
106	6684.3750	6684.3750	3342.1875	0.0000	0.0000	0.0000
107	6684.3750	6684.3750	3342.1875	0.0000	0.0000	0.0000
108	6684.3750	6684.3750	3342.1875	0.0000	0.0000	0.0000
109	6497.5446	6497.5446	3248.7723	0.0000	0.0000	0.0000
110	6497.5446	6497.5446	3248.7723	0.0000	0.0000	0.0000
111	6497.5446	6497.5446	3248.7723	0.0000	0.0000	0.0000
112	6497.5446	6497.5446	3248.7723	0.0000	0.0000	0.0000
113	6497.5446	6497.5446	3248.7723	0.0000	0.0000	0.0000
114	6497.5446	6497.5446	3248.7723	0.0000	0.0000	0.0000
115	6497.5446	6497.5446	3248.7723	0.0000	0.0000	0.0000
116	3342.1875	3342.1875	1671.0937	0.0000	0.0000	0.0000
117	3342.1875	3342.1875	1671.0937	0.0000	0.0000	0.0000
118	3342.1875	3342.1875	1671.0938	0.0000	0.0000	0.0000
119	3342.1875	3342.1875	1671.0937	0.0000	0.0000	0.0000
120	3342.1875	3342.1875	1671.0937	0.0000	0.0000	0.0000
121	3342.1875	3342.1875	1671.0937	0.0000	0.0000	0.0000
122	3342.1875	3342.1875	1671.0937	0.0000	0.0000	0.0000
123	6684.3750	6684.3750	3342.1875	0.0000	0.0000	0.0000
124	6684.3750	6684.3750	3342.1875	0.0000	0.0000	0.0000
125	6684.3750	6684.3750	3342.1875	0.0000	0.0000	0.0000
126	6684.3750	6684.3750	3342.1875	0.0000	0.0000	0.0000
127	6684.3750	6684.3750	3342.1875	0.0000	0.0000	0.0000
128	6684.3750	6684.3750	3342.1875	0.0000	0.0000	0.0000
129	6684.3750	6684.3750	3342.1875	0.0000	0.0000	0.0000
130	6497.5446	6497.5446	3248.7723	0.0000	0.0000	0.0000
131	6497.5446	6497.5446	3248.7723	0.0000	0.0000	0.0000
132	6497.5446	6497.5446	3248.7723	0.0000	0.0000	0.0000
133	6497.5446	6497.5446	3248.7723	0.0000	0.0000	0.0000
134	6497.5446	6497.5446	3248.7723	0.0000	0.0000	0.0000
135	6497.5446	6497.5446	3248.7723	0.0000	0.0000	0.0000
136	6497.5446	6497.5446	3248.7723	0.0000	0.0000	0.0000
137	3121.4286	3121.4286	1560.7143	0.0000	0.0000	0.0000
138	6242.8571	6242.8571	3121.4286	0.0000	0.0000	0.0000
139	6276.7857	6276.7857	3138.3929	0.0000	0.0000	0.0000
140	3121.4286	3121.4286	1560.7143	0.0000	0.0000	0.0000
141	6242.8571	6242.8571	3121.4286	0.0000	0.0000	0.0000
142	6276.7857	6276.7857	3138.3929	0.0000	0.0000	0.0000
143	3121.4286	3121.4286	1560.7143	0.0000	0.0000	0.0000
144	6242.8571	6242.8571	3121.4286	0.0000	0.0000	0.0000
145	6276.7857	6276.7857	3138.3929	0.0000	0.0000	0.0000
146	3121.4286	3121.4286	1560.7143	0.0000	0.0000	0.0000
147	6242.8571	6242.8571	3121.4286	0.0000	0.0000	0.0000
148	6276.7857	6276.7857	3138.3929	0.0000	0.0000	0.0000
149	3121.4286	3121.4286	1560.7143	0.0000	0.0000	0.0000
150	6242.8571	6242.8571	3121.4286	0.0000	0.0000	0.0000
151	6276.7857	6276.7857	3138.3929	0.0000	0.0000	0.0000
152	3121.4286	3121.4286	1560.7143	0.0000	0.0000	0.0000
153	6242.8571	6242.8571	3121.4286	0.0000	0.0000	0.0000
154	6276.7857	6276.7857	3138.3929	0.0000	0.0000	0.0000
155	6242.8571	6242.8571	3121.4286	0.0000	0.0000	0.0000
156	3121.4286	3121.4286	1560.7143	0.0000	0.0000	0.0000
157	6242.8571	6242.8571	3121.4286	0.0000	0.0000	0.0000
158	6276.7857	6276.7857	3138.3929	0.0000	0.0000	0.0000
159	3121.4286	3121.4286	1560.7143	0.0000	0.0000	0.0000
160	6242.8571	6242.8571	3121.4286	0.0000	0.0000	0.0000
161	6276.7857	6276.7857	3138.3929	0.0000	0.0000	0.0000
162	3121.4286	3121.4286	1560.7143	0.0000	0.0000	0.0000
163	6242.8571	6242.8571	3121.4286	0.0000	0.0000	0.0000
164	6276.7857	6276.7857	3138.3929	0.0000	0.0000	0.0000
165	3121.4286	3121.4286	1560.7143	0.0000	0.0000	0.0000
166	6242.8571	6242.8571	3121.4286	0.0000	0.0000	0.0000
167	6276.7857	6276.7857	3138.3929	0.0000	0.0000	0.0000
168	3121.4286	3121.4286	1560.7143	0.0000	0.0000	0.0000
169	6242.8571	6242.8571	3121.4286	0.0000	0.0000	0.0000
170	6276.7857	6276.7857	3138.3929	0.0000	0.0000	0.0000
171	3121.4286	3121.4286	1560.7143	0.0000	0.0000	0.0000
172	6242.8571	6242.8571	3121.4286	0.0000	0.0000	0.0000
173	6276.7857	6276.7857	3138.3929	0.0000	0.0000	0.0000
174	6242.8571	6242.8571	3121.4286	0.0000	0.0000	0.0000
175	3121.4286	3121.4286	1560.7143	0.0000	0.0000	0.0000

176	6242.8571	6242.8571	3121.4286	0.0000	0.0000	0.0000
177	6276.7857	6276.7857	3138.3929	0.0000	0.0000	0.0000
178	3121.4286	3121.4286	1560.7143	0.0000	0.0000	0.0000
179	6242.8571	6242.8571	3121.4286	0.0000	0.0000	0.0000
180	6276.7857	6276.7857	3138.3929	0.0000	0.0000	0.0000
181	3121.4286	3121.4286	1560.7143	0.0000	0.0000	0.0000
182	6242.8571	6242.8571	3121.4286	0.0000	0.0000	0.0000
183	6276.7857	6276.7857	3138.3929	0.0000	0.0000	0.0000
184	3121.4286	3121.4286	1560.7143	0.0000	0.0000	0.0000
185	6242.8571	6242.8571	3121.4286	0.0000	0.0000	0.0000
186	6276.7857	6276.7857	3138.3929	0.0000	0.0000	0.0000
187	3121.4286	3121.4286	1560.7143	0.0000	0.0000	0.0000
188	6242.8571	6242.8571	3121.4286	0.0000	0.0000	0.0000
189	6276.7857	6276.7857	3138.3929	0.0000	0.0000	0.0000
190	3121.4286	3121.4286	1560.7143	0.0000	0.0000	0.0000
191	6242.8571	6242.8571	3121.4286	0.0000	0.0000	0.0000
192	6276.7857	6276.7857	3138.3929	0.0000	0.0000	0.0000
193	6276.7857	6276.7857	3138.3929	0.0000	0.0000	0.0000
194	6242.8571	6242.8571	3121.4286	0.0000	0.0000	0.0000
195	3121.4286	3121.4286	1560.7143	0.0000	0.0000	0.0000
196	6276.7857	6276.7857	3138.3929	0.0000	0.0000	0.0000
197	6242.8571	6242.8571	3121.4286	0.0000	0.0000	0.0000
198	3121.4286	3121.4286	1560.7143	0.0000	0.0000	0.0000
199	6276.7857	6276.7857	3138.3929	0.0000	0.0000	0.0000
200	6242.8571	6242.8571	3121.4286	0.0000	0.0000	0.0000
201	3121.4286	3121.4286	1560.7143	0.0000	0.0000	0.0000
202	6276.7857	6276.7857	3138.3929	0.0000	0.0000	0.0000
203	6242.8571	6242.8571	3121.4286	0.0000	0.0000	0.0000
204	3121.4286	3121.4286	1560.7143	0.0000	0.0000	0.0000
205	6276.7857	6276.7857	3138.3929	0.0000	0.0000	0.0000
206	6242.8571	6242.8571	3121.4286	0.0000	0.0000	0.0000
207	3121.4286	3121.4286	1560.7143	0.0000	0.0000	0.0000
208	6276.7857	6276.7857	3138.3929	0.0000	0.0000	0.0000
209	6242.8571	6242.8571	3121.4286	0.0000	0.0000	0.0000
210	3121.4286	3121.4286	1560.7143	0.0000	0.0000	0.0000
211	6242.8571	6242.8571	3121.4286	0.0000	0.0000	0.0000
212	6276.7857	6276.7857	3138.3929	0.0000	0.0000	0.0000
213	6242.8571	6242.8571	3121.4286	0.0000	0.0000	0.0000
214	3121.4286	3121.4286	1560.7143	0.0000	0.0000	0.0000
215	6276.7857	6276.7857	3138.3929	0.0000	0.0000	0.0000
216	6242.8571	6242.8571	3121.4286	0.0000	0.0000	0.0000
217	3121.4286	3121.4286	1560.7143	0.0000	0.0000	0.0000
218	6276.7857	6276.7857	3138.3929	0.0000	0.0000	0.0000
219	6242.8571	6242.8571	3121.4286	0.0000	0.0000	0.0000
220	3121.4286	3121.4286	1560.7143	0.0000	0.0000	0.0000
221	6276.7857	6276.7857	3138.3929	0.0000	0.0000	0.0000
222	6242.8571	6242.8571	3121.4286	0.0000	0.0000	0.0000
223	3121.4286	3121.4286	1560.7143	0.0000	0.0000	0.0000
224	6276.7857	6276.7857	3138.3929	0.0000	0.0000	0.0000
225	6242.8571	6242.8571	3121.4286	0.0000	0.0000	0.0000
226	3121.4286	3121.4286	1560.7143	0.0000	0.0000	0.0000
227	6276.7857	6276.7857	3138.3929	0.0000	0.0000	0.0000
228	6242.8571	6242.8571	3121.4286	0.0000	0.0000	0.0000
229	3121.4286	3121.4286	1560.7143	0.0000	0.0000	0.0000
230	6242.8571	6242.8571	3121.4286	0.0000	0.0000	0.0000
231	6276.7857	6276.7857	3138.3929	0.0000	0.0000	0.0000
232	6242.8571	6242.8571	3121.4286	0.0000	0.0000	0.0000
233	3121.4286	3121.4286	1560.7143	0.0000	0.0000	0.0000
234	6276.7857	6276.7857	3138.3929	0.0000	0.0000	0.0000
235	6242.8571	6242.8571	3121.4286	0.0000	0.0000	0.0000
236	3121.4286	3121.4286	1560.7143	0.0000	0.0000	0.0000
237	6276.7857	6276.7857	3138.3929	0.0000	0.0000	0.0000
238	6242.8571	6242.8571	3121.4286	0.0000	0.0000	0.0000
239	3121.4286	3121.4286	1560.7143	0.0000	0.0000	0.0000
240	6276.7857	6276.7857	3138.3929	0.0000	0.0000	0.0000
241	6242.8571	6242.8571	3121.4286	0.0000	0.0000	0.0000
242	3121.4286	3121.4286	1560.7143	0.0000	0.0000	0.0000
243	6276.7857	6276.7857	3138.3929	0.0000	0.0000	0.0000
244	6242.8571	6242.8571	3121.4286	0.0000	0.0000	0.0000
245	3121.4286	3121.4286	1560.7143	0.0000	0.0000	0.0000
246	6276.7857	6276.7857	3138.3929	0.0000	0.0000	0.0000
247	6242.8571	6242.8571	3121.4286	0.0000	0.0000	0.0000
248	3121.4286	3121.4286	1560.7143	0.0000	0.0000	0.0000
401	6310.7143	6310.7143	3155.3571	0.0000	0.0000	0.0000
402	6310.7143	6310.7143	3155.3571	0.0000	0.0000	0.0000
403	6310.7143	6310.7143	3155.3571	0.0000	0.0000	0.0000
404	6310.7143	6310.7143	3155.3571	0.0000	0.0000	0.0000
405	6310.7143	6310.7143	3155.3571	0.0000	0.0000	0.0000
406	6310.7143	6310.7143	3155.3571	0.0000	0.0000	0.0000

407	6310.7143	6310.7143	3155.3571	0.0000	0.0000	0.0000
408	6310.7143	6310.7143	3155.3571	0.0000	0.0000	0.0000
409	6310.7143	6310.7143	3155.3571	0.0000	0.0000	0.0000
410	6310.7143	6310.7143	3155.3571	0.0000	0.0000	0.0000
411	6310.7143	6310.7143	3155.3571	0.0000	0.0000	0.0000
412	6310.7143	6310.7143	3155.3571	0.0000	0.0000	0.0000
413	6310.7143	6310.7143	3155.3571	0.0000	0.0000	0.0000
414	6310.7143	6310.7143	3155.3571	0.0000	0.0000	0.0000
415	6310.7143	6310.7143	3155.3571	0.0000	0.0000	0.0000
416	6310.7143	6310.7143	3155.3571	0.0000	0.0000	0.0000
417	6310.7143	6310.7143	3155.3571	0.0000	0.0000	0.0000
418	6310.7143	6310.7143	3155.3571	0.0000	0.0000	0.0000
419	6310.7143	6310.7143	3155.3571	0.0000	0.0000	0.0000
420	6310.7143	6310.7143	3155.3571	0.0000	0.0000	0.0000
421	6310.7143	6310.7143	3155.3571	0.0000	0.0000	0.0000
422	6310.7143	6310.7143	3155.3571	0.0000	0.0000	0.0000
423	6310.7143	6310.7143	3155.3571	0.0000	0.0000	0.0000
424	6310.7143	6310.7143	3155.3571	0.0000	0.0000	0.0000
425	6310.7143	6310.7143	3155.3571	0.0000	0.0000	0.0000
426	6310.7143	6310.7143	3155.3571	0.0000	0.0000	0.0000
427	6310.7143	6310.7143	3155.3571	0.0000	0.0000	0.0000
428	6310.7143	6310.7143	3155.3571	0.0000	0.0000	0.0000
429	6310.7143	6310.7143	3155.3571	0.0000	0.0000	0.0000
430	6310.7143	6310.7143	3155.3571	0.0000	0.0000	0.0000
431	6310.7143	6310.7143	3155.3571	0.0000	0.0000	0.0000
432	6310.7143	6310.7143	3155.3571	0.0000	0.0000	0.0000
433	6310.7143	6310.7143	3155.3571	0.0000	0.0000	0.0000
434	6310.7143	6310.7143	3155.3571	0.0000	0.0000	0.0000
435	6310.7143	6310.7143	3155.3571	0.0000	0.0000	0.0000
436	6310.7143	6310.7143	3155.3571	0.0000	0.0000	0.0000
437	6310.7143	6310.7143	3155.3571	0.0000	0.0000	0.0000
438	6310.7143	6310.7143	3155.3571	0.0000	0.0000	0.0000
439	6310.7143	6310.7143	3155.3571	0.0000	0.0000	0.0000
440	6310.7143	6310.7143	3155.3571	0.0000	0.0000	0.0000
441	6310.7143	6310.7143	3155.3571	0.0000	0.0000	0.0000
442	6310.7143	6310.7143	3155.3571	0.0000	0.0000	0.0000
443	6310.7143	6310.7143	3155.3571	0.0000	0.0000	0.0000
444	6310.7143	6310.7143	3155.3571	0.0000	0.0000	0.0000
445	6310.7143	6310.7143	3155.3571	0.0000	0.0000	0.0000
446	6310.7143	6310.7143	3155.3571	0.0000	0.0000	0.0000
447	6310.7143	6310.7143	3155.3571	0.0000	0.0000	0.0000
448	6310.7143	6310.7143	3155.3571	0.0000	0.0000	0.0000
449	6310.7143	6310.7143	3155.3571	0.0000	0.0000	0.0000
450	6310.7143	6310.7143	3155.3571	0.0000	0.0000	0.0000
451	6310.7143	6310.7143	3155.3571	0.0000	0.0000	0.0000
452	6310.7143	6310.7143	3155.3571	0.0000	0.0000	0.0000
453	6310.7143	6310.7143	3155.3571	0.0000	0.0000	0.0000
454	6310.7143	6310.7143	3155.3571	0.0000	0.0000	0.0000
455	6310.7143	6310.7143	3155.3571	0.0000	0.0000	0.0000
456	6310.7143	6310.7143	3155.3571	0.0000	0.0000	0.0000
457	6310.7143	6310.7143	3155.3571	0.0000	0.0000	0.0000
458	6310.7143	6310.7143	3155.3571	0.0000	0.0000	0.0000
459	6310.7143	6310.7143	3155.3571	0.0000	0.0000	0.0000
460	6310.7143	6310.7143	3155.3571	0.0000	0.0000	0.0000
461	6310.7143	6310.7143	3155.3571	0.0000	0.0000	0.0000
462	6310.7143	6310.7143	3155.3571	0.0000	0.0000	0.0000
463	6310.7143	6310.7143	3155.3571	0.0000	0.0000	0.0000
464	6310.7143	6310.7143	3155.3571	0.0000	0.0000	0.0000
465	6310.7143	6310.7143	3155.3571	0.0000	0.0000	0.0000
466	6310.7143	6310.7143	3155.3571	0.0000	0.0000	0.0000
467	6310.7143	6310.7143	3155.3571	0.0000	0.0000	0.0000
468	6310.7143	6310.7143	3155.3571	0.0000	0.0000	0.0000
469	6310.7143	6310.7143	3155.3571	0.0000	0.0000	0.0000
470	6310.7143	6310.7143	3155.3571	0.0000	0.0000	0.0000
471	6310.7143	6310.7143	3155.3571	0.0000	0.0000	0.0000
472	6310.7143	6310.7143	3155.3571	0.0000	0.0000	0.0000
473	6310.7143	6310.7143	3155.3571	0.0000	0.0000	0.0000
474	6310.7143	6310.7143	3155.3571	0.0000	0.0000	0.0000
475	6310.7143	6310.7143	3155.3571	0.0000	0.0000	0.0000
476	6310.7143	6310.7143	3155.3571	0.0000	0.0000	0.0000
477	6310.7143	6310.7143	3155.3571	0.0000	0.0000	0.0000
478	6310.7143	6310.7143	3155.3571	0.0000	0.0000	0.0000
479	6310.7143	6310.7143	3155.3571	0.0000	0.0000	0.0000
480	6310.7143	6310.7143	3155.3571	0.0000	0.0000	0.0000
481	6310.7143	6310.7143	3155.3571	0.0000	0.0000	0.0000
482	6310.7143	6310.7143	3155.3571	0.0000	0.0000	0.0000
483	6310.7143	6310.7143	3155.3571	0.0000	0.0000	0.0000
484	6310.7143	6310.7143	3155.3571	0.0000	0.0000	0.0000
485	6310.7143	6310.7143	3155.3571	0.0000	0.0000	0.0000

486	6310.7143	6310.7143	3155.3571	0.0000	0.0000	0.0000
487	6310.7143	6310.7143	3155.3571	0.0000	0.0000	0.0000
488	6310.7143	6310.7143	3155.3571	0.0000	0.0000	0.0000
489	6310.7143	6310.7143	3155.3571	0.0000	0.0000	0.0000
490	6310.7143	6310.7143	3155.3571	0.0000	0.0000	0.0000
491	6310.7143	6310.7143	3155.3571	0.0000	0.0000	0.0000
492	6310.7143	6310.7143	3155.3571	0.0000	0.0000	0.0000
493	6310.7143	6310.7143	3155.3571	0.0000	0.0000	0.0000
494	6310.7143	6310.7143	3155.3571	0.0000	0.0000	0.0000
495	6310.7143	6310.7143	3155.3571	0.0000	0.0000	0.0000
496	6310.7143	6310.7143	3155.3571	0.0000	0.0000	0.0000
497	6310.7143	6310.7143	3155.3571	0.0000	0.0000	0.0000
498	6310.7143	6310.7143	3155.3571	0.0000	0.0000	0.0000
499	6310.7143	6310.7143	3155.3571	0.0000	0.0000	0.0000
500	6310.7143	6310.7143	3155.3571	0.0000	0.0000	0.0000
501	6310.7143	6310.7143	3155.3571	0.0000	0.0000	0.0000
502	6310.7143	6310.7143	3155.3571	0.0000	0.0000	0.0000
503	6310.7143	6310.7143	3155.3571	0.0000	0.0000	0.0000
504	6310.7143	6310.7143	3155.3571	0.0000	0.0000	0.0000
505	6310.7143	6310.7143	3155.3571	0.0000	0.0000	0.0000
506	6310.7143	6310.7143	3155.3571	0.0000	0.0000	0.0000
507	6310.7143	6310.7143	3155.3571	0.0000	0.0000	0.0000
508	6310.7143	6310.7143	3155.3571	0.0000	0.0000	0.0000
509	6310.7143	6310.7143	3155.3571	0.0000	0.0000	0.0000
510	6310.7143	6310.7143	3155.3571	0.0000	0.0000	0.0000
511	6310.7143	6310.7143	3155.3571	0.0000	0.0000	0.0000
512	6310.7143	6310.7143	3155.3571	0.0000	0.0000	0.0000
513	6310.7143	6310.7143	3155.3571	0.0000	0.0000	0.0000
514	6310.7143	6310.7143	3155.3571	0.0000	0.0000	0.0000
515	6310.7143	6310.7143	3155.3571	0.0000	0.0000	0.0000
516	6310.7143	6310.7143	3155.3571	0.0000	0.0000	0.0000
517	6310.7143	6310.7143	3155.3571	0.0000	0.0000	0.0000
518	6310.7143	6310.7143	3155.3571	0.0000	0.0000	0.0000
519	6310.7143	6310.7143	3155.3571	0.0000	0.0000	0.0000
520	6310.7143	6310.7143	3155.3571	0.0000	0.0000	0.0000
521	6310.7143	6310.7143	3155.3571	0.0000	0.0000	0.0000
522	6310.7143	6310.7143	3155.3571	0.0000	0.0000	0.0000
523	6310.7143	6310.7143	3155.3571	0.0000	0.0000	0.0000
524	6310.7143	6310.7143	3155.3571	0.0000	0.0000	0.0000
525	6310.7143	6310.7143	3155.3571	0.0000	0.0000	0.0000
526	6310.7143	6310.7143	3155.3571	0.0000	0.0000	0.0000
527	6310.7143	6310.7143	3155.3571	0.0000	0.0000	0.0000
528	6310.7143	6310.7143	3155.3571	0.0000	0.0000	0.0000
529	6310.7143	6310.7143	3155.3571	0.0000	0.0000	0.0000
530	6310.7143	6310.7143	3155.3571	0.0000	0.0000	0.0000
531	6310.7143	6310.7143	3155.3571	0.0000	0.0000	0.0000
532	6310.7143	6310.7143	3155.3571	0.0000	0.0000	0.0000
533	6310.7143	6310.7143	3155.3571	0.0000	0.0000	0.0000
534	6310.7143	6310.7143	3155.3571	0.0000	0.0000	0.0000
535	6310.7143	6310.7143	3155.3571	0.0000	0.0000	0.0000
536	6310.7143	6310.7143	3155.3571	0.0000	0.0000	0.0000
537	6310.7143	6310.7143	3155.3571	0.0000	0.0000	0.0000
538	6310.7143	6310.7143	3155.3571	0.0000	0.0000	0.0000
539	6310.7143	6310.7143	3155.3571	0.0000	0.0000	0.0000
540	6310.7143	6310.7143	3155.3571	0.0000	0.0000	0.0000
541	6310.7143	6310.7143	3155.3571	0.0000	0.0000	0.0000
542	6310.7143	6310.7143	3155.3571	0.0000	0.0000	0.0000
543	6310.7143	6310.7143	3155.3571	0.0000	0.0000	0.0000
544	6310.7143	6310.7143	3155.3571	0.0000	0.0000	0.0000
545	6310.7143	6310.7143	3155.3571	0.0000	0.0000	0.0000
546	6310.7143	6310.7143	3155.3571	0.0000	0.0000	0.0000
547	6310.7143	6310.7143	3155.3571	0.0000	0.0000	0.0000
548	6310.7143	6310.7143	3155.3571	0.0000	0.0000	0.0000
549	6310.7143	6310.7143	3155.3571	0.0000	0.0000	0.0000
550	6310.7143	6310.7143	3155.3571	0.0000	0.0000	0.0000
551	6310.7143	6310.7143	3155.3571	0.0000	0.0000	0.0000
552	6310.7143	6310.7143	3155.3571	0.0000	0.0000	0.0000
553	6310.7143	6310.7143	3155.3571	0.0000	0.0000	0.0000
554	6310.7143	6310.7143	3155.3571	0.0000	0.0000	0.0000
555	6310.7143	6310.7143	3155.3571	0.0000	0.0000	0.0000
556	6310.7143	6310.7143	3155.3571	0.0000	0.0000	0.0000
557	6310.7143	6310.7143	3155.3571	0.0000	0.0000	0.0000
558	6310.7143	6310.7143	3155.3571	0.0000	0.0000	0.0000
559	6310.7143	6310.7143	3155.3571	0.0000	0.0000	0.0000
560	6310.7143	6310.7143	3155.3571	0.0000	0.0000	0.0000
561	6310.7143	6310.7143	3155.3571	0.0000	0.0000	0.0000
562	6310.7143	6310.7143	3155.3571	0.0000	0.0000	0.0000
563	6310.7143	6310.7143	3155.3571	0.0000	0.0000	0.0000
564	6310.7143	6310.7143	3155.3571	0.0000	0.0000	0.0000

565	6310.7143	6310.7143	3155.3571	0.0000	0.0000	0.0000
566	6310.7143	6310.7143	3155.3571	0.0000	0.0000	0.0000
567	6310.7143	6310.7143	3155.3571	0.0000	0.0000	0.0000
568	6310.7143	6310.7143	3155.3571	0.0000	0.0000	0.0000
569	6310.7143	6310.7143	3155.3571	0.0000	0.0000	0.0000
570	6310.7143	6310.7143	3155.3571	0.0000	0.0000	0.0000
571	6310.7143	6310.7143	3155.3571	0.0000	0.0000	0.0000
572	6310.7143	6310.7143	3155.3571	0.0000	0.0000	0.0000
573	6310.7143	6310.7143	3155.3571	0.0000	0.0000	0.0000
574	6310.7143	6310.7143	3155.3571	0.0000	0.0000	0.0000
575	6310.7143	6310.7143	3155.3571	0.0000	0.0000	0.0000
576	6310.7143	6310.7143	3155.3571	0.0000	0.0000	0.0000
577	6310.7143	6310.7143	3155.3571	0.0000	0.0000	0.0000
578	6310.7143	6310.7143	3155.3571	0.0000	0.0000	0.0000
579	6310.7143	6310.7143	3155.3571	0.0000	0.0000	0.0000
580	6310.7143	6310.7143	3155.3571	0.0000	0.0000	0.0000
581	6310.7143	6310.7143	3155.3571	0.0000	0.0000	0.0000
582	6310.7143	6310.7143	3155.3571	0.0000	0.0000	0.0000
583	6310.7143	6310.7143	3155.3571	0.0000	0.0000	0.0000
584	6310.7143	6310.7143	3155.3571	0.0000	0.0000	0.0000
585	6310.7143	6310.7143	3155.3571	0.0000	0.0000	0.0000
586	6310.7143	6310.7143	3155.3571	0.0000	0.0000	0.0000
587	6310.7143	6310.7143	3155.3571	0.0000	0.0000	0.0000
588	6310.7143	6310.7143	3155.3571	0.0000	0.0000	0.0000
589	6310.7143	6310.7143	3155.3571	0.0000	0.0000	0.0000
590	6310.7143	6310.7143	3155.3571	0.0000	0.0000	0.0000
591	6310.7143	6310.7143	3155.3571	0.0000	0.0000	0.0000
592	6310.7143	6310.7143	3155.3571	0.0000	0.0000	0.0000
593	6310.7143	6310.7143	3155.3571	0.0000	0.0000	0.0000
594	6310.7143	6310.7143	3155.3571	0.0000	0.0000	0.0000
595	6310.7143	6310.7143	3155.3571	0.0000	0.0000	0.0000
596	6310.7143	6310.7143	3155.3571	0.0000	0.0000	0.0000
597	6310.7143	6310.7143	3155.3571	0.0000	0.0000	0.0000
598	6310.7143	6310.7143	3155.3571	0.0000	0.0000	0.0000
599	6310.7143	6310.7143	3155.3571	0.0000	0.0000	0.0000
600	6310.7143	6310.7143	3155.3571	0.0000	0.0000	0.0000
601	6310.7143	6310.7143	3155.3571	0.0000	0.0000	0.0000
602	6310.7143	6310.7143	3155.3571	0.0000	0.0000	0.0000
603	6310.7143	6310.7143	3155.3571	0.0000	0.0000	0.0000
604	6310.7143	6310.7143	3155.3571	0.0000	0.0000	0.0000
605	6310.7143	6310.7143	3155.3571	0.0000	0.0000	0.0000
606	6310.7143	6310.7143	3155.3571	0.0000	0.0000	0.0000
607	6310.7143	6310.7143	3155.3571	0.0000	0.0000	0.0000
608	6310.7143	6310.7143	3155.3571	0.0000	0.0000	0.0000
609	6310.7143	6310.7143	3155.3571	0.0000	0.0000	0.0000
610	6310.7143	6310.7143	3155.3571	0.0000	0.0000	0.0000
611	6310.7143	6310.7143	3155.3571	0.0000	0.0000	0.0000
612	6310.7143	6310.7143	3155.3571	0.0000	0.0000	0.0000
613	6310.7143	6310.7143	3155.3571	0.0000	0.0000	0.0000
614	6310.7143	6310.7143	3155.3571	0.0000	0.0000	0.0000
615	6310.7143	6310.7143	3155.3571	0.0000	0.0000	0.0000
616	6310.7143	6310.7143	3155.3571	0.0000	0.0000	0.0000
617	6310.7143	6310.7143	3155.3571	0.0000	0.0000	0.0000
618	6310.7143	6310.7143	3155.3571	0.0000	0.0000	0.0000
619	6310.7143	6310.7143	3155.3571	0.0000	0.0000	0.0000
620	6310.7143	6310.7143	3155.3571	0.0000	0.0000	0.0000
621	6310.7143	6310.7143	3155.3571	0.0000	0.0000	0.0000
622	6310.7143	6310.7143	3155.3571	0.0000	0.0000	0.0000
623	6310.7143	6310.7143	3155.3571	0.0000	0.0000	0.0000
624	6310.7143	6310.7143	3155.3571	0.0000	0.0000	0.0000
625	6310.7143	6310.7143	3155.3571	0.0000	0.0000	0.0000
626	6310.7143	6310.7143	3155.3571	0.0000	0.0000	0.0000
627	6310.7143	6310.7143	3155.3571	0.0000	0.0000	0.0000
628	6310.7143	6310.7143	3155.3571	0.0000	0.0000	0.0000
629	6310.7143	6310.7143	3155.3571	0.0000	0.0000	0.0000
630	6310.7143	6310.7143	3155.3571	0.0000	0.0000	0.0000
631	6310.7143	6310.7143	3155.3571	0.0000	0.0000	0.0000
632	6310.7143	6310.7143	3155.3571	0.0000	0.0000	0.0000
633	6310.7143	6310.7143	3155.3571	0.0000	0.0000	0.0000
634	6310.7143	6310.7143	3155.3571	0.0000	0.0000	0.0000
635	6310.7143	6310.7143	3155.3571	0.0000	0.0000	0.0000
636	6310.7143	6310.7143	3155.3571	0.0000	0.0000	0.0000
637	6310.7143	6310.7143	3155.3571	0.0000	0.0000	0.0000
638	6310.7143	6310.7143	3155.3571	0.0000	0.0000	0.0000
639	6310.7143	6310.7143	3155.3571	0.0000	0.0000	0.0000
640	6310.7143	6310.7143	3155.3571	0.0000	0.0000	0.0000
641	6310.7143	6310.7143	3155.3571	0.0000	0.0000	0.0000
642	6310.7143	6310.7143	3155.3571	0.0000	0.0000	0.0000
643	6310.7143	6310.7143	3155.3571	0.0000	0.0000	0.0000

644	6310.7143	6310.7143	3155.3571	0.0000	0.0000	0.0000
645	6310.7143	6310.7143	3155.3571	0.0000	0.0000	0.0000
646	6310.7143	6310.7143	3155.3571	0.0000	0.0000	0.0000
647	6310.7143	6310.7143	3155.3571	0.0000	0.0000	0.0000
648	6310.7143	6310.7143	3155.3571	0.0000	0.0000	0.0000
649	6310.7143	6310.7143	3155.3571	0.0000	0.0000	0.0000
650	6310.7143	6310.7143	3155.3571	0.0000	0.0000	0.0000
651	6310.7143	6310.7143	3155.3571	0.0000	0.0000	0.0000
652	6310.7143	6310.7143	3155.3571	0.0000	0.0000	0.0000
653	6310.7143	6310.7143	3155.3571	0.0000	0.0000	0.0000
654	6310.7143	6310.7143	3155.3571	0.0000	0.0000	0.0000
655	6310.7143	6310.7143	3155.3571	0.0000	0.0000	0.0000
656	6310.7143	6310.7143	3155.3571	0.0000	0.0000	0.0000
657	6310.7143	6310.7143	3155.3571	0.0000	0.0000	0.0000
658	6310.7143	6310.7143	3155.3571	0.0000	0.0000	0.0000
659	6310.7143	6310.7143	3155.3571	0.0000	0.0000	0.0000
660	6310.7143	6310.7143	3155.3571	0.0000	0.0000	0.0000
661	6310.7143	6310.7143	3155.3571	0.0000	0.0000	0.0000
662	6310.7143	6310.7143	3155.3571	0.0000	0.0000	0.0000
663	6310.7143	6310.7143	3155.3571	0.0000	0.0000	0.0000
664	6310.7143	6310.7143	3155.3571	0.0000	0.0000	0.0000
665	6310.7143	6310.7143	3155.3571	0.0000	0.0000	0.0000
666	6310.7143	6310.7143	3155.3571	0.0000	0.0000	0.0000
667	6310.7143	6310.7143	3155.3571	0.0000	0.0000	0.0000
668	6310.7143	6310.7143	3155.3571	0.0000	0.0000	0.0000
669	6310.7143	6310.7143	3155.3571	0.0000	0.0000	0.0000
670	6310.7143	6310.7143	3155.3571	0.0000	0.0000	0.0000
671	6310.7143	6310.7143	3155.3571	0.0000	0.0000	0.0000
672	6310.7143	6310.7143	3155.3571	0.0000	0.0000	0.0000
673	6310.7143	6310.7143	3155.3571	0.0000	0.0000	0.0000
674	6310.7143	6310.7143	3155.3571	0.0000	0.0000	0.0000
675	6310.7143	6310.7143	3155.3571	0.0000	0.0000	0.0000
676	6310.7143	6310.7143	3155.3571	0.0000	0.0000	0.0000
677	6310.7143	6310.7143	3155.3571	0.0000	0.0000	0.0000
678	6310.7143	6310.7143	3155.3571	0.0000	0.0000	0.0000
679	6310.7143	6310.7143	3155.3571	0.0000	0.0000	0.0000
680	6310.7143	6310.7143	3155.3571	0.0000	0.0000	0.0000
681	6310.7143	6310.7143	3155.3571	0.0000	0.0000	0.0000
682	6310.7143	6310.7143	3155.3571	0.0000	0.0000	0.0000
683	6310.7143	6310.7143	3155.3571	0.0000	0.0000	0.0000
684	6310.7143	6310.7143	3155.3571	0.0000	0.0000	0.0000
685	6310.7143	6310.7143	3155.3571	0.0000	0.0000	0.0000
686	6310.7143	6310.7143	3155.3571	0.0000	0.0000	0.0000
687	6310.7143	6310.7143	3155.3571	0.0000	0.0000	0.0000
688	6310.7143	6310.7143	3155.3571	0.0000	0.0000	0.0000
689	6310.7143	6310.7143	3155.3571	0.0000	0.0000	0.0000
690	6310.7143	6310.7143	3155.3571	0.0000	0.0000	0.0000
691	6310.7143	6310.7143	3155.3571	0.0000	0.0000	0.0000
692	6310.7143	6310.7143	3155.3571	0.0000	0.0000	0.0000
693	6310.7143	6310.7143	3155.3571	0.0000	0.0000	0.0000
694	6310.7143	6310.7143	3155.3571	0.0000	0.0000	0.0000
695	6310.7143	6310.7143	3155.3571	0.0000	0.0000	0.0000
696	6310.7143	6310.7143	3155.3571	0.0000	0.0000	0.0000
697	6310.7143	6310.7143	3155.3571	0.0000	0.0000	0.0000
698	6310.7143	6310.7143	3155.3571	0.0000	0.0000	0.0000

*** SECTION PROPERTY DATA

NO	NAME	SHAPE	H	B	tw	tf1	r1
1	Pilastri ~	SB	0.3	0.3	0	0	0
2	Cordolo	SB	0.3	0.3	0	0	0

NO	NAME	STIFFNESS SCALE FACTOR							
		A	Asy	Asz	Ix	Iy	Iz	W	Boundary Group
1	Pilastri ~								
2	Cordolo								

NO	NAME	AREA [SRC:EQIV.]	MOMENT OF INERTIA Ix	Iy	Iz	SHAPE FACTOR k-Y	k-Z
1	Pilastri ~	0.09	0.001139	0.000675	0.000675	0.8333	0.8333
2	Cordolo	0.09	0.001139	0.000675	0.000675	0.8333	0.8333

NO	NAME	SECTION MODULUS Sy I or CONC.	SECTION MODULUS Sy J or STEEL	SECTION MODULUS Sz I or CONC.	SECTION MODULUS Sz J or STEEL
1	Pilastri ~	0.0045	0.0045	0.0045	0.0045
2	Cordolo	0.0045	0.0045	0.0045	0.0045

*** BEAM MEMBER DATA

NO	NODAL CONNECTIVITY I	NODAL CONNECTIVITY J	BEAM END RELEASE I	BEAM END RELEASE J	MATERIAL	SECTION	LENGTH
189	255	261	-	-	C25/30	Pilastri 30x30	0.5
190	253	266	-	-	C25/30	Pilastri 30x30	0.5
191	251	271	-	-	C25/30	Pilastri 30x30	0.5
192	249	276	-	-	C25/30	Pilastri 30x30	0.5
193	256	281	-	-	C25/30	Pilastri 30x30	0.5
194	254	286	-	-	C25/30	Pilastri 30x30	0.5
195	252	291	-	-	C25/30	Pilastri 30x30	0.5
196	250	296	-	-	C25/30	Pilastri 30x30	0.5
197	260	301	-	-	C25/30	Pilastri 30x30	0.5
198	259	309	-	-	C25/30	Pilastri 30x30	0.5
199	258	317	-	-	C25/30	Pilastri 30x30	0.5
200	257	325	-	-	C25/30	Pilastri 30x30	0.5
201	255	365	-	-	C25/30	Cordolo	0.5429
202	253	371	-	-	C25/30	Cordolo	0.5429
203	251	377	-	-	C25/30	Cordolo	0.5429
204	256	383	-	-	C25/30	Cordolo	0.5429
205	254	389	-	-	C25/30	Cordolo	0.5429
206	252	395	-	-	C25/30	Cordolo	0.5429
207	255	333	-	-	C25/30	Cordolo	0.5429
208	260	341	-	-	C25/30	Cordolo	0.5429
209	257	349	-	-	C25/30	Cordolo	0.5429
210	257	357	-	-	C25/30	Cordolo	0.5429
211	261	262	-	-	C25/30	Pilastri 30x30	0.5
212	262	263	-	-	C25/30	Pilastri 30x30	0.5
213	263	264	-	-	C25/30	Pilastri 30x30	0.5
214	264	265	-	-	C25/30	Pilastri 30x30	0.5
215	265	14	-	-	C25/30	Pilastri 30x30	0.5
216	266	267	-	-	C25/30	Pilastri 30x30	0.5
217	267	268	-	-	C25/30	Pilastri 30x30	0.5
218	268	269	-	-	C25/30	Pilastri 30x30	0.5
219	269	270	-	-	C25/30	Pilastri 30x30	0.5
220	270	11	-	-	C25/30	Pilastri 30x30	0.5
221	271	272	-	-	C25/30	Pilastri 30x30	0.5
222	272	273	-	-	C25/30	Pilastri 30x30	0.5
223	273	274	-	-	C25/30	Pilastri 30x30	0.5
224	274	275	-	-	C25/30	Pilastri 30x30	0.5
225	275	8	-	-	C25/30	Pilastri 30x30	0.5
226	276	277	-	-	C25/30	Pilastri 30x30	0.5
227	277	278	-	-	C25/30	Pilastri 30x30	0.5
228	278	279	-	-	C25/30	Pilastri 30x30	0.5
229	279	280	-	-	C25/30	Pilastri 30x30	0.5
230	280	5	-	-	C25/30	Pilastri 30x30	0.5
231	281	282	-	-	C25/30	Pilastri 30x30	0.5
232	282	283	-	-	C25/30	Pilastri 30x30	0.5
233	283	284	-	-	C25/30	Pilastri 30x30	0.5
234	284	285	-	-	C25/30	Pilastri 30x30	0.5
235	285	16	-	-	C25/30	Pilastri 30x30	0.5
236	286	287	-	-	C25/30	Pilastri 30x30	0.5
237	287	288	-	-	C25/30	Pilastri 30x30	0.5
238	288	289	-	-	C25/30	Pilastri 30x30	0.5
239	289	290	-	-	C25/30	Pilastri 30x30	0.5
240	290	13	-	-	C25/30	Pilastri 30x30	0.5
241	291	292	-	-	C25/30	Pilastri 30x30	0.5
242	292	293	-	-	C25/30	Pilastri 30x30	0.5
243	293	294	-	-	C25/30	Pilastri 30x30	0.5
244	294	295	-	-	C25/30	Pilastri 30x30	0.5
245	295	10	-	-	C25/30	Pilastri 30x30	0.5
246	296	297	-	-	C25/30	Pilastri 30x30	0.5
247	297	298	-	-	C25/30	Pilastri 30x30	0.5
248	298	299	-	-	C25/30	Pilastri 30x30	0.5
249	299	300	-	-	C25/30	Pilastri 30x30	0.5
250	300	7	-	-	C25/30	Pilastri 30x30	0.5
251	301	302	-	-	C25/30	Pilastri 30x30	0.5
252	302	303	-	-	C25/30	Pilastri 30x30	0.5
253	303	304	-	-	C25/30	Pilastri 30x30	0.5
254	304	305	-	-	C25/30	Pilastri 30x30	0.5

255	305	306	-	-	C25/30	Pilastri 30x30	0.5
256	306	307	-	-	C25/30	Pilastri 30x30	0.5
257	307	308	-	-	C25/30	Pilastri 30x30	0.5
258	308	15	-	-	C25/30	Pilastri 30x30	0.5
259	309	310	-	-	C25/30	Pilastri 30x30	0.5
260	310	311	-	-	C25/30	Pilastri 30x30	0.5
261	311	312	-	-	C25/30	Pilastri 30x30	0.5
262	312	313	-	-	C25/30	Pilastri 30x30	0.5
263	313	314	-	-	C25/30	Pilastri 30x30	0.5
264	314	315	-	-	C25/30	Pilastri 30x30	0.5
265	315	316	-	-	C25/30	Pilastri 30x30	0.5
266	316	12	-	-	C25/30	Pilastri 30x30	0.5
267	317	318	-	-	C25/30	Pilastri 30x30	0.5
268	318	319	-	-	C25/30	Pilastri 30x30	0.5
269	319	320	-	-	C25/30	Pilastri 30x30	0.5
270	320	321	-	-	C25/30	Pilastri 30x30	0.5
271	321	322	-	-	C25/30	Pilastri 30x30	0.5
272	322	323	-	-	C25/30	Pilastri 30x30	0.5
273	323	324	-	-	C25/30	Pilastri 30x30	0.5
274	324	9	-	-	C25/30	Pilastri 30x30	0.5
275	325	326	-	-	C25/30	Pilastri 30x30	0.5
276	326	327	-	-	C25/30	Pilastri 30x30	0.5
277	327	328	-	-	C25/30	Pilastri 30x30	0.5
278	328	329	-	-	C25/30	Pilastri 30x30	0.5
279	329	330	-	-	C25/30	Pilastri 30x30	0.5
280	330	331	-	-	C25/30	Pilastri 30x30	0.5
281	331	332	-	-	C25/30	Pilastri 30x30	0.5
282	332	6	-	-	C25/30	Pilastri 30x30	0.5
283	333	334	-	-	C25/30	Cordolo	0.5429
284	334	335	-	-	C25/30	Cordolo	0.5429
285	335	336	-	-	C25/30	Cordolo	0.5429
286	336	337	-	-	C25/30	Cordolo	0.5429
287	337	338	-	-	C25/30	Cordolo	0.5429
288	338	339	-	-	C25/30	Cordolo	0.5429
289	339	340	-	-	C25/30	Cordolo	0.5429
290	340	260	-	-	C25/30	Cordolo	0.5429
291	341	342	-	-	C25/30	Cordolo	0.5429
292	342	343	-	-	C25/30	Cordolo	0.5429
293	343	344	-	-	C25/30	Cordolo	0.5429
294	344	345	-	-	C25/30	Cordolo	0.5429
295	345	346	-	-	C25/30	Cordolo	0.5429
296	346	347	-	-	C25/30	Cordolo	0.5429
297	347	348	-	-	C25/30	Cordolo	0.5429
298	348	256	-	-	C25/30	Cordolo	0.5429
299	349	350	-	-	C25/30	Cordolo	0.5429
300	350	351	-	-	C25/30	Cordolo	0.5429
301	351	352	-	-	C25/30	Cordolo	0.5429
302	352	353	-	-	C25/30	Cordolo	0.5429
303	353	354	-	-	C25/30	Cordolo	0.5429
304	354	355	-	-	C25/30	Cordolo	0.5429
305	355	356	-	-	C25/30	Cordolo	0.5429
306	356	249	-	-	C25/30	Cordolo	0.5429
307	357	358	-	-	C25/30	Cordolo	0.5429
308	358	359	-	-	C25/30	Cordolo	0.5429
309	359	360	-	-	C25/30	Cordolo	0.5429
310	360	361	-	-	C25/30	Cordolo	0.5429
311	361	362	-	-	C25/30	Cordolo	0.5429
312	362	363	-	-	C25/30	Cordolo	0.5429
313	363	364	-	-	C25/30	Cordolo	0.5429
314	364	250	-	-	C25/30	Cordolo	0.5429
315	365	366	-	-	C25/30	Cordolo	0.5429
316	366	367	-	-	C25/30	Cordolo	0.5429
317	367	368	-	-	C25/30	Cordolo	0.5429
318	368	369	-	-	C25/30	Cordolo	0.5429
319	369	370	-	-	C25/30	Cordolo	0.5429
320	370	253	-	-	C25/30	Cordolo	0.5429
321	371	372	-	-	C25/30	Cordolo	0.5429
322	372	373	-	-	C25/30	Cordolo	0.5429
323	373	374	-	-	C25/30	Cordolo	0.5429
324	374	375	-	-	C25/30	Cordolo	0.5429
325	375	376	-	-	C25/30	Cordolo	0.5429
326	376	251	-	-	C25/30	Cordolo	0.5429
327	377	378	-	-	C25/30	Cordolo	0.5429
328	378	379	-	-	C25/30	Cordolo	0.5429
329	379	380	-	-	C25/30	Cordolo	0.5429
330	380	381	-	-	C25/30	Cordolo	0.5429
331	381	382	-	-	C25/30	Cordolo	0.5429
332	382	249	-	-	C25/30	Cordolo	0.5429
333	383	384	-	-	C25/30	Cordolo	0.5429

334	384	385	-	-	C25/30	Cordolo	0.5429
335	385	386	-	-	C25/30	Cordolo	0.5429
336	386	387	-	-	C25/30	Cordolo	0.5429
337	387	388	-	-	C25/30	Cordolo	0.5429
338	388	254	-	-	C25/30	Cordolo	0.5429
339	389	390	-	-	C25/30	Cordolo	0.5429
340	390	391	-	-	C25/30	Cordolo	0.5429
341	391	392	-	-	C25/30	Cordolo	0.5429
342	392	393	-	-	C25/30	Cordolo	0.5429
343	393	394	-	-	C25/30	Cordolo	0.5429
344	394	252	-	-	C25/30	Cordolo	0.5429
345	395	396	-	-	C25/30	Cordolo	0.5429
346	396	397	-	-	C25/30	Cordolo	0.5429
347	397	398	-	-	C25/30	Cordolo	0.5429
348	398	399	-	-	C25/30	Cordolo	0.5429
349	399	400	-	-	C25/30	Cordolo	0.5429
350	400	250	-	-	C25/30	Cordolo	0.5429
681	260	699	-	-	C25/30	Cordolo	0.5429
682	259	705	-	-	C25/30	Cordolo	0.5429
683	258	711	-	-	C25/30	Cordolo	0.5429
684	699	700	-	-	C25/30	Cordolo	0.5429
685	700	701	-	-	C25/30	Cordolo	0.5429
686	701	702	-	-	C25/30	Cordolo	0.5429
687	702	703	-	-	C25/30	Cordolo	0.5429
688	703	704	-	-	C25/30	Cordolo	0.5429
689	704	259	-	-	C25/30	Cordolo	0.5429
690	705	706	-	-	C25/30	Cordolo	0.5429
691	706	707	-	-	C25/30	Cordolo	0.5429
692	707	708	-	-	C25/30	Cordolo	0.5429
693	708	709	-	-	C25/30	Cordolo	0.5429
694	709	710	-	-	C25/30	Cordolo	0.5429
695	710	258	-	-	C25/30	Cordolo	0.5429
696	711	712	-	-	C25/30	Cordolo	0.5429
697	712	713	-	-	C25/30	Cordolo	0.5429
698	713	714	-	-	C25/30	Cordolo	0.5429
699	714	715	-	-	C25/30	Cordolo	0.5429
700	715	716	-	-	C25/30	Cordolo	0.5429
701	716	257	-	-	C25/30	Cordolo	0.5429

*** PLATE MEMBER DATA

NO	NODAL CONNECTIVITY 1	2	3	4	MATERIAL	THICKNESS	AREA
5	5	109	401	139	C25/30	0.4	0.3155
6	6	130	456	408	C25/30	0.4	0.3155
7	8	449	505	158	C25/30	0.4	0.3155
8	9	498	560	512	C25/30	0.4	0.3155
9	11	553	609	177	C25/30	0.4	0.3155
10	12	602	657	616	C25/30	0.4	0.3155
25	20	31	33	32	C25/30	0.4	0.3306
26	14	51	58	34	C25/30	0.4	0.3342
27	15	73	80	65	C25/30	0.4	0.3342
28	16	36	38	37	C25/30	0.4	0.3306
29	1	41	43	42	C25/30	0.4	0.3306
30	28	94	101	44	C25/30	0.4	0.3342
31	29	116	123	108	C25/30	0.4	0.3342
32	30	46	48	47	C25/30	0.4	0.3306
33	17	45	138	137	C25/30	0.4	0.3121
34	18	155	157	156	C25/30	0.4	0.3121
35	19	174	176	175	C25/30	0.4	0.3121
36	7	50	194	193	C25/30	0.4	0.3121
37	10	211	213	212	C25/30	0.4	0.3121
38	13	230	232	231	C25/30	0.4	0.3121
39	31	14	34	33	C25/30	0.4	0.3306
40	32	33	35	4	C25/30	0.4	0.3306
41	33	34	25	35	C25/30	0.4	0.3306
42	36	24	39	38	C25/30	0.4	0.3306
43	37	38	40	27	C25/30	0.4	0.3306
44	38	39	3	40	C25/30	0.4	0.3306
45	41	28	44	43	C25/30	0.4	0.3306
46	42	43	45	17	C25/30	0.4	0.3306
47	43	44	5	45	C25/30	0.4	0.3306
48	46	2	49	48	C25/30	0.4	0.3306
49	47	48	50	7	C25/30	0.4	0.3306
50	48	49	21	50	C25/30	0.4	0.3306
51	51	52	59	58	C25/30	0.4	0.3342
52	52	53	60	59	C25/30	0.4	0.3342

53	53	54	61	60	C25/30	0.4	0.3342
54	54	55	62	61	C25/30	0.4	0.3342
55	55	56	63	62	C25/30	0.4	0.3342
56	56	57	64	63	C25/30	0.4	0.3342
57	57	15	65	64	C25/30	0.4	0.3342
58	34	58	66	25	C25/30	0.4	0.3342
59	58	59	67	66	C25/30	0.4	0.3342
60	59	60	68	67	C25/30	0.4	0.3342
61	60	61	69	68	C25/30	0.4	0.3342
62	61	62	70	69	C25/30	0.4	0.3342
63	62	63	71	70	C25/30	0.4	0.3342
64	63	64	72	71	C25/30	0.4	0.3342
65	64	65	26	72	C25/30	0.4	0.3342
66	73	74	81	80	C25/30	0.4	0.3342
67	74	75	82	81	C25/30	0.4	0.3342
68	75	76	83	82	C25/30	0.4	0.3342
69	76	77	84	83	C25/30	0.4	0.3342
70	77	78	85	84	C25/30	0.4	0.3342
71	78	79	86	85	C25/30	0.4	0.3342
72	79	16	37	86	C25/30	0.4	0.3342
73	65	80	87	26	C25/30	0.4	0.3342
74	80	81	88	87	C25/30	0.4	0.3342
75	81	82	89	88	C25/30	0.4	0.3342
76	82	83	90	89	C25/30	0.4	0.3342
77	83	84	91	90	C25/30	0.4	0.3342
78	84	85	92	91	C25/30	0.4	0.3342
79	85	86	93	92	C25/30	0.4	0.3342
80	86	37	27	93	C25/30	0.4	0.3342
81	94	95	102	101	C25/30	0.4	0.3342
82	95	96	103	102	C25/30	0.4	0.3342
83	96	97	104	103	C25/30	0.4	0.3342
84	97	98	105	104	C25/30	0.4	0.3342
85	98	99	106	105	C25/30	0.4	0.3342
86	99	100	107	106	C25/30	0.4	0.3342
87	100	29	108	107	C25/30	0.4	0.3342
88	44	101	109	5	C25/30	0.4	0.3342
89	101	102	110	109	C25/30	0.4	0.3342
90	102	103	111	110	C25/30	0.4	0.3342
91	103	104	112	111	C25/30	0.4	0.3342
92	104	105	113	112	C25/30	0.4	0.3342
93	105	106	114	113	C25/30	0.4	0.3342
94	106	107	115	114	C25/30	0.4	0.3342
95	107	108	6	115	C25/30	0.4	0.3342
96	116	117	124	123	C25/30	0.4	0.3342
97	117	118	125	124	C25/30	0.4	0.3342
98	118	119	126	125	C25/30	0.4	0.3342
99	119	120	127	126	C25/30	0.4	0.3342
100	120	121	128	127	C25/30	0.4	0.3342
101	121	122	129	128	C25/30	0.4	0.3342
102	122	30	47	129	C25/30	0.4	0.3342
103	108	123	130	6	C25/30	0.4	0.3342
104	123	124	131	130	C25/30	0.4	0.3342
105	124	125	132	131	C25/30	0.4	0.3342
106	125	126	133	132	C25/30	0.4	0.3342
107	126	127	134	133	C25/30	0.4	0.3342
108	127	128	135	134	C25/30	0.4	0.3342
109	128	129	136	135	C25/30	0.4	0.3342
110	129	47	7	136	C25/30	0.4	0.3342
111	45	5	139	138	C25/30	0.4	0.3121
112	137	138	141	140	C25/30	0.4	0.3121
113	138	139	142	141	C25/30	0.4	0.3121
114	140	141	144	143	C25/30	0.4	0.3121
115	141	142	145	144	C25/30	0.4	0.3121
116	143	144	147	146	C25/30	0.4	0.3121
117	144	145	148	147	C25/30	0.4	0.3121
118	146	147	150	149	C25/30	0.4	0.3121
119	147	148	151	150	C25/30	0.4	0.3121
120	149	150	153	152	C25/30	0.4	0.3121
121	150	151	154	153	C25/30	0.4	0.3121
122	152	153	155	18	C25/30	0.4	0.3121
123	153	154	8	155	C25/30	0.4	0.3121
124	155	8	158	157	C25/30	0.4	0.3121
125	156	157	160	159	C25/30	0.4	0.3121
126	157	158	161	160	C25/30	0.4	0.3121
127	159	160	163	162	C25/30	0.4	0.3121
128	160	161	164	163	C25/30	0.4	0.3121
129	162	163	166	165	C25/30	0.4	0.3121
130	163	164	167	166	C25/30	0.4	0.3121
131	165	166	169	168	C25/30	0.4	0.3121

132	166	167	170	169	C25/30	0.4	0.3121
133	168	169	172	171	C25/30	0.4	0.3121
134	169	170	173	172	C25/30	0.4	0.3121
135	171	172	174	19	C25/30	0.4	0.3121
136	172	173	11	174	C25/30	0.4	0.3121
137	174	11	177	176	C25/30	0.4	0.3121
138	175	176	179	178	C25/30	0.4	0.3121
139	176	177	180	179	C25/30	0.4	0.3121
140	178	179	182	181	C25/30	0.4	0.3121
141	179	180	183	182	C25/30	0.4	0.3121
142	181	182	185	184	C25/30	0.4	0.3121
143	182	183	186	185	C25/30	0.4	0.3121
144	184	185	188	187	C25/30	0.4	0.3121
145	185	186	189	188	C25/30	0.4	0.3121
146	187	188	191	190	C25/30	0.4	0.3121
147	188	189	192	191	C25/30	0.4	0.3121
148	190	191	31	20	C25/30	0.4	0.3121
149	191	192	14	31	C25/30	0.4	0.3121
150	50	21	195	194	C25/30	0.4	0.3121
151	193	194	197	196	C25/30	0.4	0.3121
152	194	195	198	197	C25/30	0.4	0.3121
153	196	197	200	199	C25/30	0.4	0.3121
154	197	198	201	200	C25/30	0.4	0.3121
155	199	200	203	202	C25/30	0.4	0.3121
156	200	201	204	203	C25/30	0.4	0.3121
157	202	203	206	205	C25/30	0.4	0.3121
158	203	204	207	206	C25/30	0.4	0.3121
159	205	206	209	208	C25/30	0.4	0.3121
160	206	207	210	209	C25/30	0.4	0.3121
161	208	209	211	10	C25/30	0.4	0.3121
162	209	210	22	211	C25/30	0.4	0.3121
163	211	22	214	213	C25/30	0.4	0.3121
164	212	213	216	215	C25/30	0.4	0.3121
165	213	214	217	216	C25/30	0.4	0.3121
166	215	216	219	218	C25/30	0.4	0.3121
167	216	217	220	219	C25/30	0.4	0.3121
168	218	219	222	221	C25/30	0.4	0.3121
169	219	220	223	222	C25/30	0.4	0.3121
170	221	222	225	224	C25/30	0.4	0.3121
171	222	223	226	225	C25/30	0.4	0.3121
172	224	225	228	227	C25/30	0.4	0.3121
173	225	226	229	228	C25/30	0.4	0.3121
174	227	228	230	13	C25/30	0.4	0.3121
175	228	229	23	230	C25/30	0.4	0.3121
176	230	23	233	232	C25/30	0.4	0.3121
177	231	232	235	234	C25/30	0.4	0.3121
178	232	233	236	235	C25/30	0.4	0.3121
179	234	235	238	237	C25/30	0.4	0.3121
180	235	236	239	238	C25/30	0.4	0.3121
181	237	238	241	240	C25/30	0.4	0.3121
182	238	239	242	241	C25/30	0.4	0.3121
183	240	241	244	243	C25/30	0.4	0.3121
184	241	242	245	244	C25/30	0.4	0.3121
185	243	244	247	246	C25/30	0.4	0.3121
186	244	245	248	247	C25/30	0.4	0.3121
187	246	247	36	16	C25/30	0.4	0.3121
188	247	248	24	36	C25/30	0.4	0.3121
351	109	110	402	401	C25/30	0.4	0.3155
352	110	111	403	402	C25/30	0.4	0.3155
353	111	112	404	403	C25/30	0.4	0.3155
354	112	113	405	404	C25/30	0.4	0.3155
355	113	114	406	405	C25/30	0.4	0.3155
356	114	115	407	406	C25/30	0.4	0.3155
357	115	6	408	407	C25/30	0.4	0.3155
358	139	401	409	142	C25/30	0.4	0.3155
359	401	402	410	409	C25/30	0.4	0.3155
360	402	403	411	410	C25/30	0.4	0.3155
361	403	404	412	411	C25/30	0.4	0.3155
362	404	405	413	412	C25/30	0.4	0.3155
363	405	406	414	413	C25/30	0.4	0.3155
364	406	407	415	414	C25/30	0.4	0.3155
365	407	408	416	415	C25/30	0.4	0.3155
366	142	409	417	145	C25/30	0.4	0.3155
367	409	410	418	417	C25/30	0.4	0.3155
368	410	411	419	418	C25/30	0.4	0.3155
369	411	412	420	419	C25/30	0.4	0.3155
370	412	413	421	420	C25/30	0.4	0.3155
371	413	414	422	421	C25/30	0.4	0.3155
372	414	415	423	422	C25/30	0.4	0.3155

373	415	416	424	423	C25/30	0.4	0.3155
374	145	417	425	148	C25/30	0.4	0.3155
375	417	418	426	425	C25/30	0.4	0.3155
376	418	419	427	426	C25/30	0.4	0.3155
377	419	420	428	427	C25/30	0.4	0.3155
378	420	421	429	428	C25/30	0.4	0.3155
379	421	422	430	429	C25/30	0.4	0.3155
380	422	423	431	430	C25/30	0.4	0.3155
381	423	424	432	431	C25/30	0.4	0.3155
382	148	425	433	151	C25/30	0.4	0.3155
383	425	426	434	433	C25/30	0.4	0.3155
384	426	427	435	434	C25/30	0.4	0.3155
385	427	428	436	435	C25/30	0.4	0.3155
386	428	429	437	436	C25/30	0.4	0.3155
387	429	430	438	437	C25/30	0.4	0.3155
388	430	431	439	438	C25/30	0.4	0.3155
389	431	432	440	439	C25/30	0.4	0.3155
390	151	433	441	154	C25/30	0.4	0.3155
391	433	434	442	441	C25/30	0.4	0.3155
392	434	435	443	442	C25/30	0.4	0.3155
393	435	436	444	443	C25/30	0.4	0.3155
394	436	437	445	444	C25/30	0.4	0.3155
395	437	438	446	445	C25/30	0.4	0.3155
396	438	439	447	446	C25/30	0.4	0.3155
397	439	440	448	447	C25/30	0.4	0.3155
398	154	441	449	8	C25/30	0.4	0.3155
399	441	442	450	449	C25/30	0.4	0.3155
400	442	443	451	450	C25/30	0.4	0.3155
401	443	444	452	451	C25/30	0.4	0.3155
402	444	445	453	452	C25/30	0.4	0.3155
403	445	446	454	453	C25/30	0.4	0.3155
404	446	447	455	454	C25/30	0.4	0.3155
405	447	448	9	455	C25/30	0.4	0.3155
406	130	131	457	456	C25/30	0.4	0.3155
407	131	132	458	457	C25/30	0.4	0.3155
408	132	133	459	458	C25/30	0.4	0.3155
409	133	134	460	459	C25/30	0.4	0.3155
410	134	135	461	460	C25/30	0.4	0.3155
411	135	136	462	461	C25/30	0.4	0.3155
412	136	7	193	462	C25/30	0.4	0.3155
413	408	456	463	416	C25/30	0.4	0.3155
414	456	457	464	463	C25/30	0.4	0.3155
415	457	458	465	464	C25/30	0.4	0.3155
416	458	459	466	465	C25/30	0.4	0.3155
417	459	460	467	466	C25/30	0.4	0.3155
418	460	461	468	467	C25/30	0.4	0.3155
419	461	462	469	468	C25/30	0.4	0.3155
420	462	193	196	469	C25/30	0.4	0.3155
421	416	463	470	424	C25/30	0.4	0.3155
422	463	464	471	470	C25/30	0.4	0.3155
423	464	465	472	471	C25/30	0.4	0.3155
424	465	466	473	472	C25/30	0.4	0.3155
425	466	467	474	473	C25/30	0.4	0.3155
426	467	468	475	474	C25/30	0.4	0.3155
427	468	469	476	475	C25/30	0.4	0.3155
428	469	196	199	476	C25/30	0.4	0.3155
429	424	470	477	432	C25/30	0.4	0.3155
430	470	471	478	477	C25/30	0.4	0.3155
431	471	472	479	478	C25/30	0.4	0.3155
432	472	473	480	479	C25/30	0.4	0.3155
433	473	474	481	480	C25/30	0.4	0.3155
434	474	475	482	481	C25/30	0.4	0.3155
435	475	476	483	482	C25/30	0.4	0.3155
436	476	199	202	483	C25/30	0.4	0.3155
437	432	477	484	440	C25/30	0.4	0.3155
438	477	478	485	484	C25/30	0.4	0.3155
439	478	479	486	485	C25/30	0.4	0.3155
440	479	480	487	486	C25/30	0.4	0.3155
441	480	481	488	487	C25/30	0.4	0.3155
442	481	482	489	488	C25/30	0.4	0.3155
443	482	483	490	489	C25/30	0.4	0.3155
444	483	202	205	490	C25/30	0.4	0.3155
445	440	484	491	448	C25/30	0.4	0.3155
446	484	485	492	491	C25/30	0.4	0.3155
447	485	486	493	492	C25/30	0.4	0.3155
448	486	487	494	493	C25/30	0.4	0.3155
449	487	488	495	494	C25/30	0.4	0.3155
450	488	489	496	495	C25/30	0.4	0.3155
451	489	490	497	496	C25/30	0.4	0.3155

452	490	205	208	497	C25/30	0.4	0.3155
453	448	491	498	9	C25/30	0.4	0.3155
454	491	492	499	498	C25/30	0.4	0.3155
455	492	493	500	499	C25/30	0.4	0.3155
456	493	494	501	500	C25/30	0.4	0.3155
457	494	495	502	501	C25/30	0.4	0.3155
458	495	496	503	502	C25/30	0.4	0.3155
459	496	497	504	503	C25/30	0.4	0.3155
460	497	208	10	504	C25/30	0.4	0.3155
461	449	450	506	505	C25/30	0.4	0.3155
462	450	451	507	506	C25/30	0.4	0.3155
463	451	452	508	507	C25/30	0.4	0.3155
464	452	453	509	508	C25/30	0.4	0.3155
465	453	454	510	509	C25/30	0.4	0.3155
466	454	455	511	510	C25/30	0.4	0.3155
467	455	9	512	511	C25/30	0.4	0.3155
468	158	505	513	161	C25/30	0.4	0.3155
469	505	506	514	513	C25/30	0.4	0.3155
470	506	507	515	514	C25/30	0.4	0.3155
471	507	508	516	515	C25/30	0.4	0.3155
472	508	509	517	516	C25/30	0.4	0.3155
473	509	510	518	517	C25/30	0.4	0.3155
474	510	511	519	518	C25/30	0.4	0.3155
475	511	512	520	519	C25/30	0.4	0.3155
476	161	513	521	164	C25/30	0.4	0.3155
477	513	514	522	521	C25/30	0.4	0.3155
478	514	515	523	522	C25/30	0.4	0.3155
479	515	516	524	523	C25/30	0.4	0.3155
480	516	517	525	524	C25/30	0.4	0.3155
481	517	518	526	525	C25/30	0.4	0.3155
482	518	519	527	526	C25/30	0.4	0.3155
483	519	520	528	527	C25/30	0.4	0.3155
484	164	521	529	167	C25/30	0.4	0.3155
485	521	522	530	529	C25/30	0.4	0.3155
486	522	523	531	530	C25/30	0.4	0.3155
487	523	524	532	531	C25/30	0.4	0.3155
488	524	525	533	532	C25/30	0.4	0.3155
489	525	526	534	533	C25/30	0.4	0.3155
490	526	527	535	534	C25/30	0.4	0.3155
491	527	528	536	535	C25/30	0.4	0.3155
492	167	529	537	170	C25/30	0.4	0.3155
493	529	530	538	537	C25/30	0.4	0.3155
494	530	531	539	538	C25/30	0.4	0.3155
495	531	532	540	539	C25/30	0.4	0.3155
496	532	533	541	540	C25/30	0.4	0.3155
497	533	534	542	541	C25/30	0.4	0.3155
498	534	535	543	542	C25/30	0.4	0.3155
499	535	536	544	543	C25/30	0.4	0.3155
500	170	537	545	173	C25/30	0.4	0.3155
501	537	538	546	545	C25/30	0.4	0.3155
502	538	539	547	546	C25/30	0.4	0.3155
503	539	540	548	547	C25/30	0.4	0.3155
504	540	541	549	548	C25/30	0.4	0.3155
505	541	542	550	549	C25/30	0.4	0.3155
506	542	543	551	550	C25/30	0.4	0.3155
507	543	544	552	551	C25/30	0.4	0.3155
508	173	545	553	11	C25/30	0.4	0.3155
509	545	546	554	553	C25/30	0.4	0.3155
510	546	547	555	554	C25/30	0.4	0.3155
511	547	548	556	555	C25/30	0.4	0.3155
512	548	549	557	556	C25/30	0.4	0.3155
513	549	550	558	557	C25/30	0.4	0.3155
514	550	551	559	558	C25/30	0.4	0.3155
515	551	552	12	559	C25/30	0.4	0.3155
516	498	499	561	560	C25/30	0.4	0.3155
517	499	500	562	561	C25/30	0.4	0.3155
518	500	501	563	562	C25/30	0.4	0.3155
519	501	502	564	563	C25/30	0.4	0.3155
520	502	503	565	564	C25/30	0.4	0.3155
521	503	504	566	565	C25/30	0.4	0.3155
522	504	10	212	566	C25/30	0.4	0.3155
523	512	560	567	520	C25/30	0.4	0.3155
524	560	561	568	567	C25/30	0.4	0.3155
525	561	562	569	568	C25/30	0.4	0.3155
526	562	563	570	569	C25/30	0.4	0.3155
527	563	564	571	570	C25/30	0.4	0.3155
528	564	565	572	571	C25/30	0.4	0.3155
529	565	566	573	572	C25/30	0.4	0.3155
530	566	212	215	573	C25/30	0.4	0.3155

531	520	567	574	528	C25/30	0.4	0.3155
532	567	568	575	574	C25/30	0.4	0.3155
533	568	569	576	575	C25/30	0.4	0.3155
534	569	570	577	576	C25/30	0.4	0.3155
535	570	571	578	577	C25/30	0.4	0.3155
536	571	572	579	578	C25/30	0.4	0.3155
537	572	573	580	579	C25/30	0.4	0.3155
538	573	215	218	580	C25/30	0.4	0.3155
539	528	574	581	536	C25/30	0.4	0.3155
540	574	575	582	581	C25/30	0.4	0.3155
541	575	576	583	582	C25/30	0.4	0.3155
542	576	577	584	583	C25/30	0.4	0.3155
543	577	578	585	584	C25/30	0.4	0.3155
544	578	579	586	585	C25/30	0.4	0.3155
545	579	580	587	586	C25/30	0.4	0.3155
546	580	218	221	587	C25/30	0.4	0.3155
547	536	581	588	544	C25/30	0.4	0.3155
548	581	582	589	588	C25/30	0.4	0.3155
549	582	583	590	589	C25/30	0.4	0.3155
550	583	584	591	590	C25/30	0.4	0.3155
551	584	585	592	591	C25/30	0.4	0.3155
552	585	586	593	592	C25/30	0.4	0.3155
553	586	587	594	593	C25/30	0.4	0.3155
554	587	221	224	594	C25/30	0.4	0.3155
555	544	588	595	552	C25/30	0.4	0.3155
556	588	589	596	595	C25/30	0.4	0.3155
557	589	590	597	596	C25/30	0.4	0.3155
558	590	591	598	597	C25/30	0.4	0.3155
559	591	592	599	598	C25/30	0.4	0.3155
560	592	593	600	599	C25/30	0.4	0.3155
561	593	594	601	600	C25/30	0.4	0.3155
562	594	224	227	601	C25/30	0.4	0.3155
563	552	595	602	12	C25/30	0.4	0.3155
564	595	596	603	602	C25/30	0.4	0.3155
565	596	597	604	603	C25/30	0.4	0.3155
566	597	598	605	604	C25/30	0.4	0.3155
567	598	599	606	605	C25/30	0.4	0.3155
568	599	600	607	606	C25/30	0.4	0.3155
569	600	601	608	607	C25/30	0.4	0.3155
570	601	227	13	608	C25/30	0.4	0.3155
571	553	554	610	609	C25/30	0.4	0.3155
572	554	555	611	610	C25/30	0.4	0.3155
573	555	556	612	611	C25/30	0.4	0.3155
574	556	557	613	612	C25/30	0.4	0.3155
575	557	558	614	613	C25/30	0.4	0.3155
576	558	559	615	614	C25/30	0.4	0.3155
577	559	12	616	615	C25/30	0.4	0.3155
578	177	609	617	180	C25/30	0.4	0.3155
579	609	610	618	617	C25/30	0.4	0.3155
580	610	611	619	618	C25/30	0.4	0.3155
581	611	612	620	619	C25/30	0.4	0.3155
582	612	613	621	620	C25/30	0.4	0.3155
583	613	614	622	621	C25/30	0.4	0.3155
584	614	615	623	622	C25/30	0.4	0.3155
585	615	616	624	623	C25/30	0.4	0.3155
586	180	617	625	183	C25/30	0.4	0.3155
587	617	618	626	625	C25/30	0.4	0.3155
588	618	619	627	626	C25/30	0.4	0.3155
589	619	620	628	627	C25/30	0.4	0.3155
590	620	621	629	628	C25/30	0.4	0.3155
591	621	622	630	629	C25/30	0.4	0.3155
592	622	623	631	630	C25/30	0.4	0.3155
593	623	624	632	631	C25/30	0.4	0.3155
594	183	625	633	186	C25/30	0.4	0.3155
595	625	626	634	633	C25/30	0.4	0.3155
596	626	627	635	634	C25/30	0.4	0.3155
597	627	628	636	635	C25/30	0.4	0.3155
598	628	629	637	636	C25/30	0.4	0.3155
599	629	630	638	637	C25/30	0.4	0.3155
600	630	631	639	638	C25/30	0.4	0.3155
601	631	632	640	639	C25/30	0.4	0.3155
602	186	633	641	189	C25/30	0.4	0.3155
603	633	634	642	641	C25/30	0.4	0.3155
604	634	635	643	642	C25/30	0.4	0.3155
605	635	636	644	643	C25/30	0.4	0.3155
606	636	637	645	644	C25/30	0.4	0.3155
607	637	638	646	645	C25/30	0.4	0.3155
608	638	639	647	646	C25/30	0.4	0.3155
609	639	640	648	647	C25/30	0.4	0.3155

610	189	641	649	192	C25/30	0.4	0.3155
611	641	642	650	649	C25/30	0.4	0.3155
612	642	643	651	650	C25/30	0.4	0.3155
613	643	644	652	651	C25/30	0.4	0.3155
614	644	645	653	652	C25/30	0.4	0.3155
615	645	646	654	653	C25/30	0.4	0.3155
616	646	647	655	654	C25/30	0.4	0.3155
617	647	648	656	655	C25/30	0.4	0.3155
618	192	649	51	14	C25/30	0.4	0.3155
619	649	650	52	51	C25/30	0.4	0.3155
620	650	651	53	52	C25/30	0.4	0.3155
621	651	652	54	53	C25/30	0.4	0.3155
622	652	653	55	54	C25/30	0.4	0.3155
623	653	654	56	55	C25/30	0.4	0.3155
624	654	655	57	56	C25/30	0.4	0.3155
625	655	656	15	57	C25/30	0.4	0.3155
626	602	603	658	657	C25/30	0.4	0.3155
627	603	604	659	658	C25/30	0.4	0.3155
628	604	605	660	659	C25/30	0.4	0.3155
629	605	606	661	660	C25/30	0.4	0.3155
630	606	607	662	661	C25/30	0.4	0.3155
631	607	608	663	662	C25/30	0.4	0.3155
632	608	13	231	663	C25/30	0.4	0.3155
633	616	657	664	624	C25/30	0.4	0.3155
634	657	658	665	664	C25/30	0.4	0.3155
635	658	659	666	665	C25/30	0.4	0.3155
636	659	660	667	666	C25/30	0.4	0.3155
637	660	661	668	667	C25/30	0.4	0.3155
638	661	662	669	668	C25/30	0.4	0.3155
639	662	663	670	669	C25/30	0.4	0.3155
640	663	231	234	670	C25/30	0.4	0.3155
641	624	664	671	632	C25/30	0.4	0.3155
642	664	665	672	671	C25/30	0.4	0.3155
643	665	666	673	672	C25/30	0.4	0.3155
644	666	667	674	673	C25/30	0.4	0.3155
645	667	668	675	674	C25/30	0.4	0.3155
646	668	669	676	675	C25/30	0.4	0.3155
647	669	670	677	676	C25/30	0.4	0.3155
648	670	234	237	677	C25/30	0.4	0.3155
649	632	671	678	640	C25/30	0.4	0.3155
650	671	672	679	678	C25/30	0.4	0.3155
651	672	673	680	679	C25/30	0.4	0.3155
652	673	674	681	680	C25/30	0.4	0.3155
653	674	675	682	681	C25/30	0.4	0.3155
654	675	676	683	682	C25/30	0.4	0.3155
655	676	677	684	683	C25/30	0.4	0.3155
656	677	237	240	684	C25/30	0.4	0.3155
657	640	678	685	648	C25/30	0.4	0.3155
658	678	679	686	685	C25/30	0.4	0.3155
659	679	680	687	686	C25/30	0.4	0.3155
660	680	681	688	687	C25/30	0.4	0.3155
661	681	682	689	688	C25/30	0.4	0.3155
662	682	683	690	689	C25/30	0.4	0.3155
663	683	684	691	690	C25/30	0.4	0.3155
664	684	240	243	691	C25/30	0.4	0.3155
665	648	685	692	656	C25/30	0.4	0.3155
666	685	686	693	692	C25/30	0.4	0.3155
667	686	687	694	693	C25/30	0.4	0.3155
668	687	688	695	694	C25/30	0.4	0.3155
669	688	689	696	695	C25/30	0.4	0.3155
670	689	690	697	696	C25/30	0.4	0.3155
671	690	691	698	697	C25/30	0.4	0.3155
672	691	243	246	698	C25/30	0.4	0.3155
673	656	692	73	15	C25/30	0.4	0.3155
674	692	693	74	73	C25/30	0.4	0.3155
675	693	694	75	74	C25/30	0.4	0.3155
676	694	695	76	75	C25/30	0.4	0.3155
677	695	696	77	76	C25/30	0.4	0.3155
678	696	697	78	77	C25/30	0.4	0.3155
679	697	698	79	78	C25/30	0.4	0.3155
680	698	246	16	79	C25/30	0.4	0.3155

*** TOTAL WEIGHT / VOLUME / SURFACE AREA SUMMARY

SECTION NO	SECION NAME	SURFACE AREA	VOLUME	WEIGHT	FRAME NUMBER	TRUSS NUMBER
1	Pilastri 30x30	50.4	3.78	94.5	84	0

2	Cordolo	64.49	4.837	120.9	99	0

*** LOAD DATA

; Self Weight, Nodal Load, Specified Displacement, Beam Load, Floor Load, Finishing Material Load, System Temperature, Nodal Temperature, Element Temperature, Beam Section Temperature, Wind Load, Static Seismic Load, Time History Analysis Data

** FLOOR LOAD TYPE DATA

NAME	LOADCASE NAME	LOAD	SUB-BEAM WEIGHT
1	Peso proprio	-2	Consider
4	Neve	-1.7	Consider
3a	Vento	-0.71	Consider
3b	Vento	0.45	Consider

** FLOOR LOAD DATA

LOAD TYPE	DISTRIBUTION	DIR.	PROJ	NUMBER	SUB-BEAM ANGLE	UNIT-W	NODE LIST
1	One Way	LZ	NO	0	0	0	260 255 249 257
1	One Way	LZ	NO	0	0	0	257 250 256 260
4	One Way	LZ	NO	0	0	0	260 255 249 257
4	One Way	LZ	NO	0	0	0	257 250 256 260
3a	One Way	LZ	NO	0	0	0	260 255 249 257
3b	One Way	LZ	NO	0	0	0	257 250 256 260

[LOAD CASE : Peso proprio]

** SELF WEIGHT DATA

; X=0, Y=0, Z=-1

[LOAD CASE : Sovraccarichi variabili]

** NODAL LOAD DATA

NODE	FX	FY	FZ	MX	MY	MZ
249	0	0	-10	0	0	0
250	0	0	-10	0	0	0
251	0	0	-10	0	0	0
252	0	0	-10	0	0	0
254	0	0	-10	0	0	0
256	0	0	-10	0	0	0
311	0	0	-10	0	0	0
319	0	0	-10	0	0	0
327	0	0	-10	0	0	0

[LOAD CASE : Vento]

** BEAM LOAD DATA

MEMBER	TYPE	DIR.	PROJ.	D1	P1	D2	P2	D3	P3	D4	P4
189	Uniform Load	GX	NO	0	1.04	1	1.04	0	0	0	0
190	Uniform Load	GX	NO	0	2.09	1	2.09	0	0	0	0
191	Uniform Load	GX	NO	0	2.09	1	2.09	0	0	0	0
192	Uniform Load	GX	NO	0	1.04	1	1.04	0	0	0	0
193	Uniform Load	GX	NO	0	0.627	1	0.627	0	0	0	0
194	Uniform Load	GX	NO	0	1.25	1	1.25	0	0	0	0
195	Uniform Load	GX	NO	0	1.25	1	1.25	0	0	0	0
196	Uniform Load	GX	NO	0	0.627	1	0.627	0	0	0	0
211	Uniform Load	GX	NO	0	1.04	1	1.04	0	0	0	0
212	Uniform Load	GX	NO	0	1.04	1	1.04	0	0	0	0
213	Uniform Load	GX	NO	0	1.04	1	1.04	0	0	0	0
214	Uniform Load	GX	NO	0	1.04	1	1.04	0	0	0	0
215	Uniform Load	GX	NO	0	1.04	1	1.04	0	0	0	0
216	Uniform Load	GX	NO	0	2.09	1	2.09	0	0	0	0
217	Uniform Load	GX	NO	0	2.09	1	2.09	0	0	0	0
218	Uniform Load	GX	NO	0	2.09	1	2.09	0	0	0	0

219	Uniform Load	GX	NO	0	2.09	1	2.09	0	0	0	0
220	Uniform Load	GX	NO	0	2.09	1	2.09	0	0	0	0
221	Uniform Load	GX	NO	0	2.09	1	2.09	0	0	0	0
222	Uniform Load	GX	NO	0	2.09	1	2.09	0	0	0	0
223	Uniform Load	GX	NO	0	2.09	1	2.09	0	0	0	0
224	Uniform Load	GX	NO	0	2.09	1	2.09	0	0	0	0
225	Uniform Load	GX	NO	0	2.09	1	2.09	0	0	0	0
226	Uniform Load	GX	NO	0	1.04	1	1.04	0	0	0	0
227	Uniform Load	GX	NO	0	1.04	1	1.04	0	0	0	0
228	Uniform Load	GX	NO	0	1.04	1	1.04	0	0	0	0
229	Uniform Load	GX	NO	0	1.04	1	1.04	0	0	0	0
230	Uniform Load	GX	NO	0	1.04	1	1.04	0	0	0	0
231	Uniform Load	GX	NO	0	0.627	1	0.627	0	0	0	0
232	Uniform Load	GX	NO	0	0.627	1	0.627	0	0	0	0
233	Uniform Load	GX	NO	0	0.627	1	0.627	0	0	0	0
234	Uniform Load	GX	NO	0	0.627	1	0.627	0	0	0	0
235	Uniform Load	GX	NO	0	0.627	1	0.627	0	0	0	0
236	Uniform Load	GX	NO	0	1.25	1	1.25	0	0	0	0
237	Uniform Load	GX	NO	0	1.25	1	1.25	0	0	0	0
238	Uniform Load	GX	NO	0	1.25	1	1.25	0	0	0	0
239	Uniform Load	GX	NO	0	1.25	1	1.25	0	0	0	0
240	Uniform Load	GX	NO	0	1.25	1	1.25	0	0	0	0
241	Uniform Load	GX	NO	0	1.25	1	1.25	0	0	0	0
242	Uniform Load	GX	NO	0	1.25	1	1.25	0	0	0	0
243	Uniform Load	GX	NO	0	1.25	1	1.25	0	0	0	0
244	Uniform Load	GX	NO	0	1.25	1	1.25	0	0	0	0
245	Uniform Load	GX	NO	0	1.25	1	1.25	0	0	0	0
246	Uniform Load	GX	NO	0	0.627	1	0.627	0	0	0	0
247	Uniform Load	GX	NO	0	0.627	1	0.627	0	0	0	0
248	Uniform Load	GX	NO	0	0.627	1	0.627	0	0	0	0
249	Uniform Load	GX	NO	0	0.627	1	0.627	0	0	0	0
250	Uniform Load	GX	NO	0	0.627	1	0.627	0	0	0	0

[LOAD CASE : Permanenti portati]

** NODAL LOAD DATA

NODE	FX	FY	FZ	MX	MY	MZ
5	0	0	-8	0	0	0
6	0	0	-8	0	0	0
7	0	0	-8	0	0	0
8	0	0	-8	0	0	0
10	0	0	-8	0	0	0
11	0	0	-8	0	0	0
13	0	0	-8	0	0	0
14	0	0	-8	0	0	0
15	0	0	-8	0	0	0
16	0	0	-8	0	0	0
51	0	0	-8	0	0	0
52	0	0	-8	0	0	0
53	0	0	-8	0	0	0
54	0	0	-8	0	0	0
55	0	0	-8	0	0	0
56	0	0	-8	0	0	0
57	0	0	-8	0	0	0
78	0	0	-8	0	0	0
79	0	0	-8	0	0	0
109	0	0	-8	0	0	0
110	0	0	-8	0	0	0
115	0	0	-8	0	0	0
130	0	0	-8	0	0	0
135	0	0	-8	0	0	0
136	0	0	-8	0	0	0
139	0	0	-8	0	0	0
142	0	0	-8	0	0	0
145	0	0	-8	0	0	0
148	0	0	-8	0	0	0
151	0	0	-8	0	0	0
154	0	0	-8	0	0	0
158	0	0	-8	0	0	0
161	0	0	-8	0	0	0
164	0	0	-8	0	0	0
167	0	0	-8	0	0	0
170	0	0	-8	0	0	0
173	0	0	-8	0	0	0
177	0	0	-8	0	0	0
180	0	0	-8	0	0	0

183	0	0	-8	0	0	0
186	0	0	-8	0	0	0
189	0	0	-8	0	0	0
192	0	0	-8	0	0	0
193	0	0	-8	0	0	0
196	0	0	-8	0	0	0
199	0	0	-8	0	0	0
202	0	0	-8	0	0	0
205	0	0	-8	0	0	0
208	0	0	-8	0	0	0
212	0	0	-8	0	0	0
215	0	0	-8	0	0	0
218	0	0	-8	0	0	0
221	0	0	-8	0	0	0
224	0	0	-8	0	0	0
227	0	0	-8	0	0	0
231	0	0	-8	0	0	0
234	0	0	-8	0	0	0
237	0	0	-8	0	0	0
240	0	0	-8	0	0	0
243	0	0	-8	0	0	0
246	0	0	-8	0	0	0

*** RESPONSE SPECTRUM FUNCTION DATA

NAME	FUNCTION TYPE	SCALE	GRAVITY	DATA
N.T.C.-20~	Normalized Acc.	1	9.806	0:0.136 0.155:0.35 0.464:0.35 0.535:0.303 0.606:0.268

*** RESPONSE SPECTRUM LOAD CASE DATA

NAME	FUNCTION NAME	DIR.	ANGLE	SCALE	PERIOD FACTOR	ACCIDENTAL ECCENTRICITY
SX	N.T.C.-2018-SLV	X-Y	0	1	1	-
SY	N.T.C.-2018-SLV	X-Y	90	1	1	-

*** LOAD COMBINATION DATA

** GENERAL

NO	NAME	TYPE	ACTIVE	DESCRIPTION
1	gLCB1	Add	ACTIVE	1.3D + 1.5(1.0Sovraccarichi variabili)
2	gLCB2	Add	ACTIVE	1.3D + 1.5(1.0Sovraccarichi variabili) + 1.5(0.5Neve)
3	gLCB3	Add	ACTIVE	1.3D + 1.5(0.7Sovraccarichi variabili) + 1.5(1.0Neve)
4	gLCB4	Add	ACTIVE	1.3D + 1.5(1.0Sovraccarichi variabili) + 1.5(0.6)Vento
5	gLCB5	Add	ACTIVE	1.3D + 1.5(0.7Sovraccarichi variabili) + 1.5Vento
6	gLCB6	Add	ACTIVE	1.3D + 1.5(1.0Sovraccarichi variabili) - 1.5(0.6)Vento
7	gLCB7	Add	ACTIVE	1.3D + 1.5(0.7Sovraccarichi variabili) - 1.5Vento
8	gLCB8	Add	ACTIVE	1.3D + 1.5(1.0Sovraccarichi variabili) + 1.5(0.5Neve) + 1.5(0.6)Vento
9	gLCB9	Add	ACTIVE	1.3D + 1.5(0.7Sovraccarichi variabili) + 1.5(0.5Neve) + 1.5Vento
10	gLCB10	Add	ACTIVE	1.3D + 1.5(1.0Sovraccarichi variabili) + 1.5(0.5Neve) - 1.5(0.6)Vento
11	gLCB11	Add	ACTIVE	1.3D + 1.5(0.7Sovraccarichi variabili) + 1.5(0.5Neve) - 1.5Vento
12	gLCB12	Add	ACTIVE	1.3D + 1.5(0.7Sovraccarichi variabili) + 1.5(1.0Neve) + 1.5(0.6)Vento
13	gLCB13	Add	ACTIVE	1.3D + 1.5(0.7Sovraccarichi variabili) + 1.5(1.0Neve) - 1.5(0.6)Vento
14	gLCB14	Add	ACTIVE	1.0D + 1.0(0.3Sovraccarichi variabili) + 1.0(1.0)SX
15	gLCB15	Add	ACTIVE	1.0D + 1.0(0.3Sovraccarichi variabili) + 1.0(1.0)SY
16	gLCB16	Add	ACTIVE	1.0D + 1.0(0.3Sovraccarichi variabili) - 1.0(1.0)SX
17	gLCB17	Add	ACTIVE	1.0D + 1.0(0.3Sovraccarichi variabili) - 1.0(1.0)SY

```
18      gLCB18        Add      ACTIVE  1.0D + (1.0Sovraccarichi variabili)
19      gLCB19        Add      ACTIVE  1.0D + (1.0Sovraccarichi variabili) + (
                                       0.5Neve)
20      gLCB20        Add      ACTIVE  1.0D + (0.7Sovraccarichi variabili) + (
                                       1.0Neve)
21      gLCB21        Add      ACTIVE  1.0D + (1.0Sovraccarichi variabili) + (0.6)
                                       Vento
22      gLCB22        Add      ACTIVE  1.0D + (1.0Sovraccarichi variabili) - (0.6)
                                       Vento
23      gLCB23        Add      ACTIVE  1.0D + (0.7Sovraccarichi variabili) +
                                       1.0Vento
24      gLCB24        Add      ACTIVE  1.0D + (0.7Sovraccarichi variabili) -
                                       1.0Vento
25      gLCB25        Add      ACTIVE  1.0D + (1.0Sovraccarichi variabili) + (
                                       0.5Neve) + (0.6)Vento
26      gLCB26        Add      ACTIVE  1.0D + (1.0Sovraccarichi variabili) + (
                                       0.5Neve) - (0.6)Vento
27      gLCB27        Add      ACTIVE  1.0D + (0.7Sovraccarichi variabili) + (
                                       0.5Neve) + 1.0Vento
28      gLCB28        Add      ACTIVE  1.0D + (0.7Sovraccarichi variabili) + (
                                       0.5Neve) - 1.0Vento
29      gLCB29        Add      ACTIVE  1.0D + (0.7Sovraccarichi variabili) + (
                                       1.0Neve) + (0.6)Vento
30      gLCB30        Add      ACTIVE  1.0D + (0.7Sovraccarichi variabili) + (
                                       1.0Neve) - (0.6)Vento
31      gLCB31        Add      ACTIVE  1.0D + (0.5Sovraccarichi variabili)
32      gLCB32        Add      ACTIVE  1.0D + (0.3Sovraccarichi variabili) + (
                                       0.2Neve)
33      gLCB33        Add      ACTIVE  1.0D + (0.3Sovraccarichi variabili) + (0.2)
                                       Vento
34      gLCB34        Add      ACTIVE  1.0D + (0.3Sovraccarichi variabili) - (0.2)
                                       Vento
35      gLCB35        Add      ACTIVE  1.0D + (0.3Sovraccarichi variabili) + (
                                       0.2Neve) + (0.2)Vento
36      gLCB36        Add      ACTIVE  1.0D + (0.3Sovraccarichi variabili) + (
                                       0.2Neve) - (0.2)Vento
37      gLCB37        Add      ACTIVE  1.0D + (0.3Sovraccarichi variabili)
38 RC ENV_STR    Envelope      ACTIVE  Concrete Strength Envelope
39 RC ENV_SER    Envelope      ACTIVE  Concrete Serviceability Envelope
```

ALLEGATO 1

TABULATI DI CALCOLO DATI DI OUTPUT

```
*****************************************************************************************
**              Gen 2019          Modeling, Integrated Design & Analysis Software       **
**                         GENERAL STRUCTURE DESIGN SYSTEM                               **
*****************************************************************************************

                   XXX   XXX     XX    XXXXXXXX      XXXXXXX    XXXXXXXX
                   XXXX XXXX     XX    XX     XX     XX   XX    XX    XX
                   XX XXX XX     XX    XX     XX     XX   XX    XX
                   XX  X  XX     XX    XX     XX     XXXXXXX    XXXXXXXX
                   XXX    XX    XXX    XXX    XX     XX   XX         XXX
                   XXX    XX    XXX    XXX    XX    XXX   XX    XX   XXX
                   XXX    XX    XXX    XXX    XX    XXX   XX    XX   XXX
                   XXX    XX    XXX    XXXXXXXX     XXX   XX    XXXXXXXX  /Gen

                                  Gen 2019

                COPYRIGHT (C) SINCE 1989. MIDAS Information Technology Co.,Ltd.
                                  ALL RIGHTS RESERVED.              MIDAS TEAM

*****************************************************************************************


                              ANALYSIS RESULT OUTPUT
                              ______________________
```

LOAD SET FOR DISPLACMENT OUTPUT - Load Set 1

<< LOAD COMB/CASE/ENVEL ABBREVIATION TABLE >>

ABBREVIATION	FULL NAME	TYPE	DESCRIPTION
RC ENV~1	RC ENV_STR	Gen.Envl	Concrete Strength Envelope
RC ENV~2	RC ENV_SER	Gen.Envl	Concrete Serviceability Envelope

<< SELECTED LOAD CASE/COMBINATION DETAIL LIST >>

[Selected Load Cases]

LOAD CASE	ANAL.TYPE	DESCRIPTION	STATIC LOAD CASE DETAIL TYPE
SX	Res.Spec		
SY	Res.Spec		

[Selected Load Combinations]

L. COMB	TYPE	COMBINATION DETAIL
RC ENV~1	Gen.Envl	1.000 x gLCB1 , 1.000 x gLCB2 , 1.000 x gLCB3 , 1.000 x gLCB4 , 1.000 x gLCB5 , 1.000 x gLCB6 , 1.000 x gLCB7 , 1.000 x gLCB8 , 1.000 x gLCB9 , 1.000 x gLCB10 , 1.000 x gLCB11 , 1.000 x gLCB12 , 1.000 x gLCB13 , 1.000 x gLCB14 , 1.000 x gLCB15 , 1.000 x gLCB16 , 1.000 x gLCB17
RC ENV~2	Gen.Envl	1.000 x gLCB18 , 1.000 x gLCB19 , 1.000 x gLCB20 , 1.000 x gLCB21 , 1.000 x gLCB22 , 1.000 x gLCB23 , 1.000 x gLCB24 , 1.000 x gLCB25 , 1.000 x gLCB26 , 1.000 x gLCB27 , 1.000 x gLCB28 , 1.000 x gLCB29 , 1.000 x gLCB30 , 1.000 x gLCB31 , 1.000 x gLCB32 , 1.000 x gLCB33 , 1.000 x gLCB34 , 1.000 x gLCB35 , 1.000 x gLCB36 , 1.000 x gLCB37

LOAD SET FOR REACTION OUTPUT - Load Set 1

<< LOAD COMB/CASE/ENVEL ABBREVIATION TABLE >>

ABBREVIATION	FULL NAME	TYPE	DESCRIPTION
No Abbreviation was defined in this Load Set. All names are less than 8 char.'s			

<< SELECTED LOAD CASE/COMBINATION DETAIL LIST >>

[Selected Load Cases]

LOAD CASE	ANAL.TYPE	DESCRIPTION	STATIC LOAD CASE DETAIL TYPE
SX	Res.Spec		
SY	Res.Spec		

[Selected Load Combinations]

L. COMB	TYPE	COMBINATION DETAIL
RC ENV~1	Gen.Envl	1.000 x gLCB1 , 1.000 x gLCB2 , 1.000 x gLCB3 , 1.000 x gLCB4 , 1.000 x gLCB5 , 1.000 x gLCB6 , 1.000 x gLCB7 , 1.000 x gLCB8 , 1.000 x gLCB9 , 1.000 x gLCB10 , 1.000 x gLCB11 , 1.000 x gLCB12 , 1.000 x gLCB13 , 1.000 x gLCB14 , 1.000 x gLCB15 , 1.000 x gLCB16 , 1.000 x gLCB17
RC ENV~2	Gen.Envl	1.000 x gLCB18 , 1.000 x gLCB19 , 1.000 x gLCB20 , 1.000 x gLCB21 , 1.000 x gLCB22 , 1.000 x gLCB23 , 1.000 x gLCB24 , 1.000 x gLCB25 , 1.000 x gLCB26 , 1.000 x gLCB27 , 1.000 x gLCB28 , 1.000 x gLCB29 , 1.000 x gLCB30 , 1.000 x gLCB31 , 1.000 x gLCB32 , 1.000 x gLCB33 , 1.000 x gLCB34 , 1.000 x gLCB35 , 1.000 x gLCB36 , 1.000 x gLCB37

LOAD SET FOR ELEMENT OUTPUT - Load Set 1

<< LOAD COMB/CASE/ENVEL ABBREVIATION TABLE >>

ABBREVIATION	FULL NAME	TYPE	DESCRIPTION
No Abbreviation was defined in this Load Set. All names are less than 8 char.'s			

<< SELECTED LOAD CASE/COMBINATION DETAIL LIST >>

[Selected Load Cases]

LOAD CASE	ANAL.TYPE	DESCRIPTION	STATIC LOAD CASE DETAIL TYPE
SX	Res.Spec		
SY	Res.Spec		

[Selected Load Combinations]

L. COMB	TYPE	COMBINATION DETAIL
RC ENV~1	Gen.Envl	1.000 x gLCB1 , 1.000 x gLCB2 , 1.000 x gLCB3 , 1.000 x gLCB4 , 1.000 x gLCB5 , 1.000 x gLCB6 , 1.000 x gLCB7 , 1.000 x gLCB8 , 1.000 x gLCB9 , 1.000 x gLCB10 , 1.000 x gLCB11 , 1.000 x gLCB12 , 1.000 x gLCB13 , 1.000 x gLCB14 , 1.000 x gLCB15 , 1.000 x gLCB16 , 1.000 x gLCB17
RC ENV~2	Gen.Envl	1.000 x gLCB18 , 1.000 x gLCB19 , 1.000 x gLCB20 , 1.000 x gLCB21 , 1.000 x gLCB22 , 1.000 x gLCB23 , 1.000 x gLCB24 , 1.000 x gLCB25 , 1.000 x gLCB26 , 1.000 x gLCB27 , 1.000 x gLCB28 , 1.000 x gLCB29 , 1.000 x gLCB30 , 1.000 x gLCB31 , 1.000 x gLCB32 , 1.000 x gLCB33 , 1.000 x gLCB34 , 1.000 x gLCB35 , 1.000 x gLCB36 , 1.000 x gLCB37

NODE DISPLACEMENT AND ROTATIONS DEFAULT PRINTOUT Unit System : kN , m

NODE	LC		UX	UY	UZ	RX	RY	RZ
1	SX (RS)		0.000	0.000	0.000	0.0	0.0	0.0
	SY (RS)		0.000	0.000	0.000	0.0	0.0	0.0
	RC ENV~1	Max	0.000	0.000	-0.002	0.0	0.0	0.0
		Min	-0.000	-0.000	-0.004	-0.0	-0.0	0.0
	RC ENV~2	Max	0.000	-0.000	-0.003	-0.0	-0.0	0.0
		Min	-0.000	-0.000	-0.003	-0.0	-0.0	0.0
2	SX (RS)		0.000	0.000	0.000	0.0	0.0	0.0
	SY (RS)		0.000	0.000	0.000	0.0	0.0	0.0
	RC ENV~1	Max	0.000	0.000	-0.002	-0.0	0.0	0.0
		Min	-0.000	-0.000	-0.004	-0.0	-0.0	0.0
	RC ENV~2	Max	0.000	-0.000	-0.003	-0.0	0.0	0.0
		Min	-0.000	-0.000	-0.003	-0.0	0.0	0.0
3	SX (RS)		0.000	0.000	0.000	0.0	0.0	0.0
	SY (RS)		0.000	0.000	0.000	0.0	0.0	0.0
	RC ENV~1	Max	0.000	0.000	-0.002	0.0	0.0	0.0
		Min	-0.000	-0.000	-0.005	-0.0	-0.0	0.0
	RC ENV~2	Max	0.000	0.000	-0.003	0.0	0.0	0.0
		Min	-0.000	0.000	-0.004	-0.0	-0.0	0.0
4	SX (RS)		0.000	0.000	0.000	0.0	0.0	0.0
	SY (RS)		0.000	0.000	0.000	0.0	0.0	0.0
	RC ENV~1	Max	0.000	0.000	-0.002	0.0	0.0	0.0
		Min	-0.000	-0.000	-0.004	-0.0	-0.0	0.0
	RC ENV~2	Max	0.000	0.000	-0.002	0.0	0.0	0.0
		Min	-0.000	0.000	-0.003	0.0	-0.0	0.0
5	SX (RS)		0.000	0.000	0.000	0.0	0.0	0.0
	SY (RS)		0.000	0.000	0.000	0.0	0.0	0.0
	RC ENV~1	Max	0.000	0.000	-0.002	0.0	0.0	0.0
		Min	-0.000	-0.000	-0.004	-0.0	-0.0	-0.0
	RC ENV~2	Max	0.000	-0.000	-0.003	-0.0	-0.0	-0.0
		Min	-0.000	-0.000	-0.003	-0.0	-0.0	-0.0
6	SX (RS)		0.000	0.000	0.000	0.0	0.0	0.0
	SY (RS)		0.000	0.000	0.000	0.0	0.0	0.0
	RC ENV~1	Max	0.000	0.000	-0.002	0.0	0.0	0.0
		Min	-0.000	-0.000	-0.004	-0.0	-0.0	-0.0
	RC ENV~2	Max	0.000	-0.000	-0.002	-0.0	0.0	0.0
		Min	-0.000	-0.000	-0.003	-0.0	-0.0	-0.0
7	SX (RS)		0.000	0.000	0.000	0.0	0.0	0.0
	SY (RS)		0.000	0.000	0.000	0.0	0.0	0.0
	RC ENV~1	Max	0.000	0.000	-0.002	0.0	0.0	0.0
		Min	-0.000	-0.000	-0.004	-0.0	-0.0	-0.0
	RC ENV~2	Max	0.000	-0.000	-0.003	-0.0	0.0	0.0
		Min	-0.000	-0.000	-0.003	-0.0	0.0	0.0
8	SX (RS)		0.000	0.000	0.000	0.0	0.0	0.0
	SY (RS)		0.000	0.000	0.000	0.0	0.0	0.0
	RC ENV~1	Max	0.000	0.000	-0.003	0.0	0.0	0.0
		Min	-0.000	-0.000	-0.004	-0.0	-0.0	-0.0
	RC ENV~2	Max	0.000	0.000	-0.003	0.0	0.0	-0.0
		Min	-0.000	-0.000	-0.003	0.0	-0.0	-0.0

9	SX (RS)	0.000	0.000	0.000	0.0	0.0	0.0
	SY (RS)	0.000	0.000	0.000	0.0	0.0	0.0
RC ENV~1	Max	0.000	0.000	-0.003	0.0	0.0	0.0
	Min	-0.000	-0.000	-0.004	-0.0	-0.0	-0.0
RC ENV~2	Max	0.000	-0.000	-0.003	0.0	0.0	0.0
	Min	-0.000	-0.000	-0.003	-0.0	0.0	-0.0
10	SX (RS)	0.000	0.000	0.000	0.0	0.0	0.0
	SY (RS)	0.000	0.000	0.000	0.0	0.0	0.0
RC ENV~1	Max	0.000	0.000	-0.003	0.0	0.0	0.0
	Min	-0.000	-0.000	-0.004	-0.0	-0.0	-0.0
RC ENV~2	Max	0.000	-0.000	-0.003	-0.0	0.0	0.0
	Min	-0.000	-0.000	-0.003	-0.0	-0.0	0.0
11	SX (RS)	0.000	0.000	0.000	0.0	0.0	0.0
	SY (RS)	0.000	0.000	0.000	0.0	0.0	0.0
RC ENV~1	Max	0.000	0.000	-0.002	0.0	0.0	0.0
	Min	-0.000	-0.000	-0.004	-0.0	-0.0	-0.0
RC ENV~2	Max	0.000	0.000	-0.003	0.0	0.0	0.0
	Min	-0.000	0.000	-0.003	0.0	-0.0	0.0
12	SX (RS)	0.000	0.000	0.000	0.0	0.0	0.0
	SY (RS)	0.000	0.000	0.000	0.0	0.0	0.0
RC ENV~1	Max	0.000	0.000	-0.002	0.0	0.0	0.0
	Min	-0.000	-0.000	-0.004	-0.0	-0.0	-0.0
RC ENV~2	Max	0.000	0.000	-0.002	0.0	0.0	0.0
	Min	-0.000	0.000	-0.003	-0.0	0.0	-0.0
13	SX (RS)	0.000	0.000	0.000	0.0	0.0	0.0
	SY (RS)	0.000	0.000	0.000	0.0	0.0	0.0
RC ENV~1	Max	0.000	0.000	-0.003	0.0	0.0	0.0
	Min	-0.000	-0.000	-0.005	-0.0	-0.0	-0.0
RC ENV~2	Max	0.000	0.000	-0.003	0.0	0.0	-0.0
	Min	-0.000	-0.000	-0.003	-0.0	-0.0	-0.0
14	SX (RS)	0.000	0.000	0.000	0.0	0.0	0.0
	SY (RS)	0.000	0.000	0.000	0.0	0.0	0.0
RC ENV~1	Max	0.000	0.000	-0.002	0.0	0.0	0.0
	Min	-0.000	-0.000	-0.004	-0.0	-0.0	-0.0
RC ENV~2	Max	0.000	0.000	-0.002	0.0	0.0	0.0
	Min	-0.000	0.000	-0.003	0.0	-0.0	0.0
15	SX (RS)	0.000	0.000	0.000	0.0	0.0	0.0
	SY (RS)	0.000	0.000	0.000	0.0	0.0	0.0
RC ENV~1	Max	0.000	0.000	-0.002	0.0	0.0	0.0
	Min	-0.000	-0.000	-0.004	-0.0	-0.0	-0.0
RC ENV~2	Max	0.000	0.000	-0.002	-0.0	0.0	0.0
	Min	-0.000	0.000	-0.003	-0.0	0.0	-0.0
16	SX (RS)	0.000	0.000	0.000	0.0	0.0	0.0
	SY (RS)	0.000	0.000	0.000	0.0	0.0	0.0
RC ENV~1	Max	0.000	0.000	-0.003	0.0	0.0	0.0
	Min	-0.000	-0.000	-0.005	-0.0	-0.0	-0.0
RC ENV~2	Max	0.000	0.000	-0.003	0.0	0.0	-0.0
	Min	-0.000	0.000	-0.004	-0.0	0.0	-0.0
17	SX (RS)	0.000	0.000	0.000	0.0	0.0	0.0
	SY (RS)	0.000	0.000	0.000	0.0	0.0	0.0
RC ENV~1	Max	0.000	0.000	-0.002	0.0	0.0	0.0
	Min	-0.000	-0.000	-0.004	-0.0	-0.0	0.0
RC ENV~2	Max	0.000	-0.000	-0.003	-0.0	-0.0	0.0

	Min	-0.000	-0.000	-0.003	-0.0	-0.0	0.0
18	SX (RS)	0.000	0.000	0.000	0.0	0.0	0.0
	SY (RS)	0.000	0.000	0.000	0.0	0.0	0.0
RC ENV~1	Max	0.000	0.000	-0.003	0.0	0.0	0.0
	Min	-0.000	-0.000	-0.004	-0.0	-0.0	0.0
RC ENV~2	Max	0.000	0.000	-0.003	0.0	0.0	0.0
	Min	-0.000	-0.000	-0.003	0.0	-0.0	0.0
19	SX (RS)	0.000	0.000	0.000	0.0	0.0	0.0
	SY (RS)	0.000	0.000	0.000	0.0	0.0	0.0
RC ENV~1	Max	0.000	0.000	-0.002	0.0	0.0	0.0
	Min	-0.000	-0.000	-0.004	0.0	-0.0	0.0
RC ENV~2	Max	0.000	0.000	-0.003	0.0	0.0	0.0
	Min	-0.000	-0.000	-0.003	0.0	-0.0	0.0
20	SX (RS)	0.000	0.000	0.000	0.0	0.0	0.0
	SY (RS)	0.000	0.000	0.000	0.0	0.0	0.0
RC ENV~1	Max	0.000	0.000	-0.002	0.0	0.0	0.0
	Min	-0.000	-0.000	-0.004	-0.0	-0.0	0.0
RC ENV~2	Max	0.000	0.000	-0.002	0.0	0.0	0.0
	Min	-0.000	0.000	-0.003	0.0	-0.0	0.0
21	SX (RS)	0.000	0.000	0.000	0.0	0.0	0.0
	SY (RS)	0.000	0.000	0.000	0.0	0.0	0.0
RC ENV~1	Max	0.000	0.000	-0.002	0.0	0.0	0.0
	Min	-0.000	-0.000	-0.004	-0.0	-0.0	0.0
RC ENV~2	Max	0.000	-0.000	-0.003	-0.0	0.0	0.0
	Min	-0.000	-0.000	-0.003	-0.0	0.0	0.0
22	SX (RS)	0.000	0.000	0.000	0.0	0.0	0.0
	SY (RS)	0.000	0.000	0.000	0.0	0.0	0.0
RC ENV~1	Max	0.000	0.000	-0.003	0.0	0.0	0.0
	Min	-0.000	-0.000	-0.004	-0.0	-0.0	0.0
RC ENV~2	Max	0.000	0.000	-0.003	-0.0	0.0	0.0
	Min	-0.000	-0.000	-0.003	-0.0	-0.0	0.0
23	SX (RS)	0.000	0.000	0.000	0.0	0.0	0.0
	SY (RS)	0.000	0.000	0.000	0.0	0.0	0.0
RC ENV~1	Max	0.000	0.000	-0.003	0.0	0.0	0.0
	Min	-0.000	-0.000	-0.005	-0.0	-0.0	0.0
RC ENV~2	Max	0.000	0.000	-0.003	0.0	0.0	0.0
	Min	-0.000	-0.000	-0.003	-0.0	-0.0	0.0
24	SX (RS)	0.000	0.000	0.000	0.0	0.0	0.0
	SY (RS)	0.000	0.000	0.000	0.0	0.0	0.0
RC ENV~1	Max	0.000	0.000	-0.002	0.0	0.0	0.0
	Min	-0.000	-0.000	-0.005	-0.0	-0.0	0.0
RC ENV~2	Max	0.000	0.000	-0.003	0.0	0.0	0.0
	Min	-0.000	-0.000	-0.004	-0.0	-0.0	0.0
25	SX (RS)	0.000	0.000	0.000	0.0	0.0	0.0
	SY (RS)	0.000	0.000	0.000	0.0	0.0	0.0
RC ENV~1	Max	0.000	0.000	-0.002	0.0	0.0	0.0
	Min	-0.000	-0.000	-0.004	-0.0	-0.0	0.0
RC ENV~2	Max	0.000	0.000	-0.002	0.0	0.0	0.0
	Min	-0.000	0.000	-0.003	0.0	-0.0	0.0
26	SX (RS)	0.000	0.000	0.000	0.0	0.0	0.0
	SY (RS)	0.000	0.000	0.000	0.0	0.0	0.0
RC ENV~1	Max	0.000	0.000	-0.002	0.0	0.0	0.0
	Min	-0.000	-0.000	-0.004	-0.0	-0.0	0.0

	RC ENV~2	Max	0.000	0.000	-0.002	0.0	0.0	0.0
		Min	-0.000	0.000	-0.003	-0.0	0.0	0.0
27	SX (RS)		0.000	0.000	0.000	0.0	0.0	0.0
	SY (RS)		0.000	0.000	0.000	0.0	0.0	0.0
	RC ENV~1	Max	0.000	0.000	-0.002	0.0	0.0	0.0
		Min	-0.000	-0.000	-0.005	-0.0	-0.0	0.0
	RC ENV~2	Max	0.000	0.000	-0.003	0.0	0.0	0.0
		Min	-0.000	0.000	-0.004	-0.0	0.0	0.0
28	SX (RS)		0.000	0.000	0.000	0.0	0.0	0.0
	SY (RS)		0.000	0.000	0.000	0.0	0.0	0.0
	RC ENV~1	Max	0.000	0.000	-0.002	-0.0	0.0	0.0
		Min	-0.000	-0.000	-0.004	-0.0	-0.0	0.0
	RC ENV~2	Max	0.000	-0.000	-0.003	-0.0	-0.0	0.0
		Min	-0.000	-0.000	-0.003	-0.0	-0.0	0.0
29	SX (RS)		0.000	0.000	0.000	0.0	0.0	0.0
	SY (RS)		0.000	0.000	0.000	0.0	0.0	0.0
	RC ENV~1	Max	0.000	0.000	-0.002	0.0	0.0	0.0
		Min	-0.000	-0.000	-0.004	-0.0	-0.0	0.0
	RC ENV~2	Max	0.000	-0.000	-0.002	-0.0	-0.0	0.0
		Min	-0.000	-0.000	-0.003	-0.0	-0.0	0.0
30	SX (RS)		0.000	0.000	0.000	0.0	0.0	0.0
	SY (RS)		0.000	0.000	0.000	0.0	0.0	0.0
	RC ENV~1	Max	0.000	0.000	-0.002	-0.0	0.0	0.0
		Min	-0.000	-0.000	-0.004	-0.0	-0.0	0.0
	RC ENV~2	Max	0.000	-0.000	-0.003	-0.0	0.0	0.0
		Min	-0.000	-0.000	-0.003	-0.0	0.0	0.0
31	SX (RS)		0.000	0.000	0.000	0.0	0.0	0.0
	SY (RS)		0.000	0.000	0.000	0.0	0.0	0.0
	RC ENV~1	Max	0.000	0.000	-0.002	0.0	0.0	0.0
		Min	-0.000	-0.000	-0.004	-0.0	-0.0	0.0
	RC ENV~2	Max	0.000	0.000	-0.002	0.0	0.0	0.0
		Min	-0.000	0.000	-0.003	0.0	-0.0	0.0
32	SX (RS)		0.000	0.000	0.000	0.0	0.0	0.0
	SY (RS)		0.000	0.000	0.000	0.0	0.0	0.0
	RC ENV~1	Max	0.000	0.000	-0.002	0.0	0.0	0.0
		Min	-0.000	-0.000	-0.004	-0.0	-0.0	0.0
	RC ENV~2	Max	0.000	0.000	-0.002	0.0	0.0	0.0
		Min	-0.000	0.000	-0.003	0.0	-0.0	0.0
33	SX (RS)		0.000	0.000	0.000	0.0	0.0	0.0
	SY (RS)		0.000	0.000	0.000	0.0	0.0	0.0
	RC ENV~1	Max	0.000	0.000	-0.002	0.0	0.0	0.0
		Min	-0.000	-0.000	-0.004	-0.0	-0.0	0.0
	RC ENV~2	Max	0.000	0.000	-0.002	0.0	0.0	0.0
		Min	-0.000	0.000	-0.003	0.0	-0.0	0.0
34	SX (RS)		0.000	0.000	0.000	0.0	0.0	0.0
	SY (RS)		0.000	0.000	0.000	0.0	0.0	0.0
	RC ENV~1	Max	0.000	0.000	-0.002	0.0	0.0	0.0
		Min	-0.000	-0.000	-0.004	-0.0	-0.0	0.0
	RC ENV~2	Max	0.000	0.000	-0.002	0.0	0.0	0.0
		Min	-0.000	0.000	-0.003	0.0	-0.0	0.0
35	SX (RS)		0.000	0.000	0.000	0.0	0.0	0.0
	SY (RS)		0.000	0.000	0.000	0.0	0.0	0.0

	RC ENV~1	Max	0.000	0.000	-0.002	0.0	0.0	0.0
		Min	-0.000	-0.000	-0.004	-0.0	-0.0	0.0
	RC ENV~2	Max	0.000	0.000	-0.002	0.0	0.0	0.0
		Min	-0.000	0.000	-0.003	0.0	-0.0	0.0
36	SX (RS)		0.000	0.000	0.000	0.0	0.0	0.0
	SY (RS)		0.000	0.000	0.000	0.0	0.0	0.0
	RC ENV~1	Max	0.000	0.000	-0.002	0.0	0.0	0.0
		Min	-0.000	-0.000	-0.005	-0.0	-0.0	0.0
	RC ENV~2	Max	0.000	0.000	-0.003	0.0	0.0	0.0
		Min	-0.000	0.000	-0.004	-0.0	-0.0	0.0
37	SX (RS)		0.000	0.000	0.000	0.0	0.0	0.0
	SY (RS)		0.000	0.000	0.000	0.0	0.0	0.0
	RC ENV~1	Max	0.000	0.000	-0.002	0.0	0.0	0.0
		Min	-0.000	-0.000	-0.005	-0.0	-0.0	0.0
	RC ENV~2	Max	0.000	0.000	-0.003	0.0	0.0	0.0
		Min	-0.000	0.000	-0.004	-0.0	0.0	0.0
38	SX (RS)		0.000	0.000	0.000	0.0	0.0	0.0
	SY (RS)		0.000	0.000	0.000	0.0	0.0	0.0
	RC ENV~1	Max	0.000	0.000	-0.002	0.0	0.0	0.0
		Min	-0.000	-0.000	-0.005	-0.0	-0.0	0.0
	RC ENV~2	Max	0.000	0.000	-0.003	0.0	0.0	0.0
		Min	-0.000	0.000	-0.004	-0.0	-0.0	0.0
39	SX (RS)		0.000	0.000	0.000	0.0	0.0	0.0
	SY (RS)		0.000	0.000	0.000	0.0	0.0	0.0
	RC ENV~1	Max	0.000	0.000	-0.002	0.0	0.0	0.0
		Min	-0.000	-0.000	-0.005	-0.0	-0.0	0.0
	RC ENV~2	Max	0.000	0.000	-0.003	0.0	0.0	0.0
		Min	-0.000	0.000	-0.004	-0.0	-0.0	0.0
40	SX (RS)		0.000	0.000	0.000	0.0	0.0	0.0
	SY (RS)		0.000	0.000	0.000	0.0	0.0	0.0
	RC ENV~1	Max	0.000	0.000	-0.002	0.0	0.0	0.0
		Min	-0.000	-0.000	-0.005	-0.0	-0.0	0.0
	RC ENV~2	Max	0.000	0.000	-0.003	0.0	0.0	0.0
		Min	-0.000	0.000	-0.004	-0.0	-0.0	0.0
41	SX (RS)		0.000	0.000	0.000	0.0	0.0	0.0
	SY (RS)		0.000	0.000	0.000	0.0	0.0	0.0
	RC ENV~1	Max	0.000	0.000	-0.002	-0.0	0.0	0.0
		Min	-0.000	-0.000	-0.004	-0.0	-0.0	0.0
	RC ENV~2	Max	0.000	-0.000	-0.003	-0.0	-0.0	0.0
		Min	-0.000	-0.000	-0.003	-0.0	-0.0	0.0
42	SX (RS)		0.000	0.000	0.000	0.0	0.0	0.0
	SY (RS)		0.000	0.000	0.000	0.0	0.0	0.0
	RC ENV~1	Max	0.000	0.000	-0.002	0.0	0.0	0.0
		Min	-0.000	-0.000	-0.004	-0.0	-0.0	0.0
	RC ENV~2	Max	0.000	-0.000	-0.003	-0.0	-0.0	0.0
		Min	-0.000	-0.000	-0.003	-0.0	-0.0	0.0
43	SX (RS)		0.000	0.000	0.000	0.0	0.0	0.0
	SY (RS)		0.000	0.000	0.000	0.0	0.0	0.0
	RC ENV~1	Max	0.000	0.000	-0.002	0.0	0.0	0.0
		Min	-0.000	-0.000	-0.004	-0.0	-0.0	0.0
	RC ENV~2	Max	0.000	-0.000	-0.003	-0.0	-0.0	0.0
		Min	-0.000	-0.000	-0.003	-0.0	-0.0	0.0
44	SX (RS)		0.000	0.000	0.000	0.0	0.0	0.0

	SY (RS)	0.000	0.000	0.000	0.0	0.0	0.0
RC ENV~1	Max	0.000	0.000	-0.002	-0.0	0.0	0.0
	Min	-0.000	-0.000	-0.004	-0.0	-0.0	0.0
RC ENV~2	Max	0.000	-0.000	-0.003	-0.0	-0.0	0.0
	Min	-0.000	-0.000	-0.003	-0.0	-0.0	0.0
45	SX (RS)	0.000	0.000	0.000	0.0	0.0	0.0
	SY (RS)	0.000	0.000	0.000	0.0	0.0	0.0
RC ENV~1	Max	0.000	0.000	-0.002	0.0	0.0	0.0
	Min	-0.000	-0.000	-0.004	-0.0	-0.0	0.0
RC ENV~2	Max	0.000	-0.000	-0.003	-0.0	-0.0	0.0
	Min	-0.000	-0.000	-0.003	-0.0	-0.0	0.0
46	SX (RS)	0.000	0.000	0.000	0.0	0.0	0.0
	SY (RS)	0.000	0.000	0.000	0.0	0.0	0.0
RC ENV~1	Max	0.000	0.000	-0.002	-0.0	0.0	0.0
	Min	-0.000	-0.000	-0.004	-0.0	-0.0	0.0
RC ENV~2	Max	0.000	-0.000	-0.003	-0.0	0.0	0.0
	Min	-0.000	-0.000	-0.003	-0.0	0.0	0.0
47	SX (RS)	0.000	0.000	0.000	0.0	0.0	0.0
	SY (RS)	0.000	0.000	0.000	0.0	0.0	0.0
RC ENV~1	Max	0.000	0.000	-0.002	-0.0	0.0	0.0
	Min	-0.000	-0.000	-0.004	-0.0	-0.0	0.0
RC ENV~2	Max	0.000	-0.000	-0.003	-0.0	0.0	0.0
	Min	-0.000	-0.000	-0.003	-0.0	0.0	0.0
48	SX (RS)	0.000	0.000	0.000	0.0	0.0	0.0
	SY (RS)	0.000	0.000	0.000	0.0	0.0	0.0
RC ENV~1	Max	0.000	0.000	-0.002	-0.0	0.0	0.0
	Min	-0.000	-0.000	-0.004	-0.0	-0.0	0.0
RC ENV~2	Max	0.000	-0.000	-0.003	-0.0	0.0	0.0
	Min	-0.000	-0.000	-0.003	-0.0	0.0	0.0
49	SX (RS)	0.000	0.000	0.000	0.0	0.0	0.0
	SY (RS)	0.000	0.000	0.000	0.0	0.0	0.0
RC ENV~1	Max	0.000	0.000	-0.002	-0.0	0.0	0.0
	Min	-0.000	-0.000	-0.004	-0.0	-0.0	0.0
RC ENV~2	Max	0.000	-0.000	-0.003	-0.0	0.0	0.0
	Min	-0.000	-0.000	-0.003	-0.0	0.0	0.0
50	SX (RS)	0.000	0.000	0.000	0.0	0.0	0.0
	SY (RS)	0.000	0.000	0.000	0.0	0.0	0.0
RC ENV~1	Max	0.000	0.000	-0.002	-0.0	0.0	0.0
	Min	-0.000	-0.000	-0.004	-0.0	-0.0	0.0
RC ENV~2	Max	0.000	-0.000	-0.003	-0.0	0.0	0.0
	Min	-0.000	-0.000	-0.003	-0.0	0.0	0.0
51	SX (RS)	0.000	0.000	0.000	0.0	0.0	0.0
	SY (RS)	0.000	0.000	0.000	0.0	0.0	0.0
RC ENV~1	Max	0.000	0.000	-0.002	0.0	0.0	0.0
	Min	-0.000	-0.000	-0.004	-0.0	-0.0	0.0
RC ENV~2	Max	0.000	0.000	-0.002	0.0	0.0	0.0
	Min	-0.000	0.000	-0.003	0.0	-0.0	0.0
52	SX (RS)	0.000	0.000	0.000	0.0	0.0	0.0
	SY (RS)	0.000	0.000	0.000	0.0	0.0	0.0
RC ENV~1	Max	0.000	0.000	-0.002	0.0	0.0	0.0
	Min	-0.000	-0.000	-0.004	-0.0	-0.0	0.0
RC ENV~2	Max	0.000	0.000	-0.002	0.0	0.0	0.0
	Min	-0.000	0.000	-0.003	-0.0	-0.0	0.0

53	SX (RS)	0.000	0.000	0.000	0.0	0.0	0.0
	SY (RS)	0.000	0.000	0.000	0.0	0.0	0.0
RC ENV~1	Max	0.000	0.000	-0.002	0.0	0.0	0.0
	Min	-0.000	-0.000	-0.004	-0.0	-0.0	0.0
RC ENV~2	Max	0.000	0.000	-0.002	0.0	0.0	0.0
	Min	-0.000	0.000	-0.003	-0.0	-0.0	0.0
54	SX (RS)	0.000	0.000	0.000	0.0	0.0	0.0
	SY (RS)	0.000	0.000	0.000	0.0	0.0	0.0
RC ENV~1	Max	0.000	0.000	-0.002	0.0	0.0	0.0
	Min	-0.000	-0.000	-0.004	-0.0	-0.0	0.0
RC ENV~2	Max	0.000	0.000	-0.002	-0.0	0.0	0.0
	Min	-0.000	0.000	-0.003	-0.0	-0.0	0.0
55	SX (RS)	0.000	0.000	0.000	0.0	0.0	0.0
	SY (RS)	0.000	0.000	0.000	0.0	0.0	0.0
RC ENV~1	Max	0.000	0.000	-0.002	0.0	0.0	0.0
	Min	-0.000	-0.000	-0.004	-0.0	-0.0	0.0
RC ENV~2	Max	0.000	0.000	-0.002	-0.0	0.0	0.0
	Min	-0.000	0.000	-0.003	-0.0	0.0	0.0
56	SX (RS)	0.000	0.000	0.000	0.0	0.0	0.0
	SY (RS)	0.000	0.000	0.000	0.0	0.0	0.0
RC ENV~1	Max	0.000	0.000	-0.002	0.0	0.0	0.0
	Min	-0.000	-0.000	-0.004	-0.0	0.0	0.0
RC ENV~2	Max	0.000	0.000	-0.002	-0.0	0.0	0.0
	Min	-0.000	0.000	-0.003	-0.0	0.0	0.0
57	SX (RS)	0.000	0.000	0.000	0.0	0.0	0.0
	SY (RS)	0.000	0.000	0.000	0.0	0.0	0.0
RC ENV~1	Max	0.000	0.000	-0.002	0.0	0.0	0.0
	Min	-0.000	-0.000	-0.004	-0.0	0.0	0.0
RC ENV~2	Max	0.000	0.000	-0.002	-0.0	0.0	0.0
	Min	-0.000	0.000	-0.003	-0.0	0.0	0.0
58	SX (RS)	0.000	0.000	0.000	0.0	0.0	0.0
	SY (RS)	0.000	0.000	0.000	0.0	0.0	0.0
RC ENV~1	Max	0.000	0.000	-0.002	0.0	0.0	0.0
	Min	-0.000	-0.000	-0.004	-0.0	-0.0	0.0
RC ENV~2	Max	0.000	0.000	-0.002	0.0	0.0	0.0
	Min	-0.000	0.000	-0.003	0.0	-0.0	0.0
59	SX (RS)	0.000	0.000	0.000	0.0	0.0	0.0
	SY (RS)	0.000	0.000	0.000	0.0	0.0	0.0
RC ENV~1	Max	0.000	0.000	-0.002	0.0	0.0	0.0
	Min	-0.000	-0.000	-0.004	-0.0	-0.0	0.0
RC ENV~2	Max	0.000	0.000	-0.002	0.0	0.0	0.0
	Min	-0.000	0.000	-0.003	0.0	-0.0	0.0
60	SX (RS)	0.000	0.000	0.000	0.0	0.0	0.0
	SY (RS)	0.000	0.000	0.000	0.0	0.0	0.0
RC ENV~1	Max	0.000	0.000	-0.002	0.0	0.0	0.0
	Min	-0.000	-0.000	-0.004	-0.0	-0.0	0.0
RC ENV~2	Max	0.000	0.000	-0.002	0.0	0.0	0.0
	Min	-0.000	0.000	-0.003	-0.0	-0.0	0.0
61	SX (RS)	0.000	0.000	0.000	0.0	0.0	0.0
	SY (RS)	0.000	0.000	0.000	0.0	0.0	0.0
RC ENV~1	Max	0.000	0.000	-0.002	0.0	0.0	0.0
	Min	-0.000	-0.000	-0.004	-0.0	-0.0	0.0

	RC ENV~2	Max	0.000	0.000	-0.002	0.0	0.0	0.0
		Min	-0.000	0.000	-0.003	-0.0	-0.0	0.0
62	SX (RS)		0.000	0.000	0.000	0.0	0.0	0.0
	SY (RS)		0.000	0.000	0.000	0.0	0.0	0.0
	RC ENV~1	Max	0.000	0.000	-0.002	0.0	0.0	0.0
		Min	-0.000	-0.000	-0.004	-0.0	-0.0	0.0
	RC ENV~2	Max	0.000	0.000	-0.002	0.0	0.0	0.0
		Min	-0.000	0.000	-0.003	-0.0	0.0	0.0
63	SX (RS)		0.000	0.000	0.000	0.0	0.0	0.0
	SY (RS)		0.000	0.000	0.000	0.0	0.0	0.0
	RC ENV~1	Max	0.000	0.000	-0.002	0.0	0.0	0.0
		Min	-0.000	-0.000	-0.004	-0.0	-0.0	0.0
	RC ENV~2	Max	0.000	0.000	-0.002	0.0	0.0	0.0
		Min	-0.000	0.000	-0.003	-0.0	0.0	0.0
64	SX (RS)		0.000	0.000	0.000	0.0	0.0	0.0
	SY (RS)		0.000	0.000	0.000	0.0	0.0	0.0
	RC ENV~1	Max	0.000	0.000	-0.002	0.0	0.0	0.0
		Min	-0.000	-0.000	-0.004	-0.0	0.0	0.0
	RC ENV~2	Max	0.000	0.000	-0.002	0.0	0.0	0.0
		Min	-0.000	0.000	-0.003	-0.0	0.0	0.0
65	SX (RS)		0.000	0.000	0.000	0.0	0.0	0.0
	SY (RS)		0.000	0.000	0.000	0.0	0.0	0.0
	RC ENV~1	Max	0.000	0.000	-0.002	0.0	0.0	0.0
		Min	-0.000	-0.000	-0.004	-0.0	0.0	0.0
	RC ENV~2	Max	0.000	0.000	-0.002	0.0	0.0	0.0
		Min	-0.000	0.000	-0.003	-0.0	0.0	0.0
66	SX (RS)		0.000	0.000	0.000	0.0	0.0	0.0
	SY (RS)		0.000	0.000	0.000	0.0	0.0	0.0
	RC ENV~1	Max	0.000	0.000	-0.002	0.0	0.0	0.0
		Min	-0.000	-0.000	-0.004	-0.0	-0.0	0.0
	RC ENV~2	Max	0.000	0.000	-0.002	0.0	0.0	0.0
		Min	-0.000	0.000	-0.003	0.0	-0.0	0.0
67	SX (RS)		0.000	0.000	0.000	0.0	0.0	0.0
	SY (RS)		0.000	0.000	0.000	0.0	0.0	0.0
	RC ENV~1	Max	0.000	0.000	-0.002	0.0	0.0	0.0
		Min	-0.000	-0.000	-0.004	-0.0	-0.0	0.0
	RC ENV~2	Max	0.000	0.000	-0.002	0.0	0.0	0.0
		Min	-0.000	0.000	-0.003	0.0	-0.0	0.0
68	SX (RS)		0.000	0.000	0.000	0.0	0.0	0.0
	SY (RS)		0.000	0.000	0.000	0.0	0.0	0.0
	RC ENV~1	Max	0.000	0.000	-0.002	0.0	0.0	0.0
		Min	-0.000	-0.000	-0.004	-0.0	-0.0	0.0
	RC ENV~2	Max	0.000	0.000	-0.002	0.0	0.0	0.0
		Min	-0.000	0.000	-0.003	0.0	-0.0	0.0
69	SX (RS)		0.000	0.000	0.000	0.0	0.0	0.0
	SY (RS)		0.000	0.000	0.000	0.0	0.0	0.0
	RC ENV~1	Max	0.000	0.000	-0.002	0.0	0.0	0.0
		Min	-0.000	-0.000	-0.004	-0.0	-0.0	0.0
	RC ENV~2	Max	0.000	0.000	-0.002	0.0	0.0	0.0
		Min	-0.000	0.000	-0.003	-0.0	-0.0	0.0
70	SX (RS)		0.000	0.000	0.000	0.0	0.0	0.0
	SY (RS)		0.000	0.000	0.000	0.0	0.0	0.0
	RC ENV~1	Max	0.000	0.000	-0.002	0.0	0.0	0.0

		Min	-0.000	-0.000	-0.004	-0.0	-0.0	0.0
	RC ENV~2	Max	0.000	0.000	-0.002	0.0	0.0	0.0
		Min	-0.000	0.000	-0.003	-0.0	0.0	0.0
71		SX (RS)	0.000	0.000	0.000	0.0	0.0	0.0
		SY (RS)	0.000	0.000	0.000	0.0	0.0	0.0
	RC ENV~1	Max	0.000	0.000	-0.002	0.0	0.0	0.0
		Min	-0.000	-0.000	-0.004	-0.0	-0.0	0.0
	RC ENV~2	Max	0.000	0.000	-0.002	0.0	0.0	0.0
		Min	-0.000	0.000	-0.003	-0.0	0.0	0.0
72		SX (RS)	0.000	0.000	0.000	0.0	0.0	0.0
		SY (RS)	0.000	0.000	0.000	0.0	0.0	0.0
	RC ENV~1	Max	0.000	0.000	-0.002	0.0	0.0	0.0
		Min	-0.000	-0.000	-0.004	-0.0	0.0	0.0
	RC ENV~2	Max	0.000	0.000	-0.002	0.0	0.0	0.0
		Min	-0.000	0.000	-0.003	-0.0	0.0	0.0
73		SX (RS)	0.000	0.000	0.000	0.0	0.0	0.0
		SY (RS)	0.000	0.000	0.000	0.0	0.0	0.0
	RC ENV~1	Max	0.000	0.000	-0.002	0.0	0.0	0.0
		Min	-0.000	-0.000	-0.004	-0.0	0.0	0.0
	RC ENV~2	Max	0.000	0.000	-0.002	0.0	0.0	0.0
		Min	-0.000	0.000	-0.003	-0.0	0.0	0.0
74		SX (RS)	0.000	0.000	0.000	0.0	0.0	0.0
		SY (RS)	0.000	0.000	0.000	0.0	0.0	0.0
	RC ENV~1	Max	0.000	0.000	-0.002	0.0	0.0	0.0
		Min	-0.000	-0.000	-0.005	-0.0	0.0	0.0
	RC ENV~2	Max	0.000	0.000	-0.002	0.0	0.0	0.0
		Min	-0.000	0.000	-0.003	-0.0	0.0	0.0
75		SX (RS)	0.000	0.000	0.000	0.0	0.0	0.0
		SY (RS)	0.000	0.000	0.000	0.0	0.0	0.0
	RC ENV~1	Max	0.000	0.000	-0.002	0.0	0.0	0.0
		Min	-0.000	-0.000	-0.005	-0.0	0.0	0.0
	RC ENV~2	Max	0.000	0.000	-0.002	0.0	0.0	0.0
		Min	-0.000	0.000	-0.003	-0.0	0.0	0.0
76		SX (RS)	0.000	0.000	0.000	0.0	0.0	0.0
		SY (RS)	0.000	0.000	0.000	0.0	0.0	0.0
	RC ENV~1	Max	0.000	0.000	-0.002	0.0	0.0	0.0
		Min	-0.000	-0.000	-0.005	-0.0	0.0	0.0
	RC ENV~2	Max	0.000	0.000	-0.002	0.0	0.0	0.0
		Min	-0.000	0.000	-0.003	-0.0	0.0	0.0
77		SX (RS)	0.000	0.000	0.000	0.0	0.0	0.0
		SY (RS)	0.000	0.000	0.000	0.0	0.0	0.0
	RC ENV~1	Max	0.000	0.000	-0.002	0.0	0.0	0.0
		Min	-0.000	-0.000	-0.005	-0.0	0.0	0.0
	RC ENV~2	Max	0.000	0.000	-0.003	0.0	0.0	0.0
		Min	-0.000	0.000	-0.003	-0.0	0.0	0.0
78		SX (RS)	0.000	0.000	0.000	0.0	0.0	0.0
		SY (RS)	0.000	0.000	0.000	0.0	0.0	0.0
	RC ENV~1	Max	0.000	0.000	-0.002	0.0	0.0	0.0
		Min	-0.000	-0.000	-0.005	-0.0	0.0	0.0
	RC ENV~2	Max	0.000	0.000	-0.003	0.0	0.0	0.0
		Min	-0.000	0.000	-0.004	-0.0	0.0	0.0
79		SX (RS)	0.000	0.000	0.000	0.0	0.0	0.0
		SY (RS)	0.000	0.000	0.000	0.0	0.0	0.0

	RC ENV~1	Max	0.000	0.000	-0.003	0.0	0.0	0.0
		Min	-0.000	-0.000	-0.005	-0.0	0.0	0.0
	RC ENV~2	Max	0.000	0.000	-0.003	0.0	0.0	0.0
		Min	-0.000	0.000	-0.004	-0.0	0.0	0.0
80	SX (RS)		0.000	0.000	0.000	0.0	0.0	0.0
	SY (RS)		0.000	0.000	0.000	0.0	0.0	0.0
	RC ENV~1	Max	0.000	0.000	-0.002	0.0	0.0	0.0
		Min	-0.000	-0.000	-0.004	-0.0	-0.0	0.0
	RC ENV~2	Max	0.000	0.000	-0.002	0.0	0.0	0.0
		Min	-0.000	0.000	-0.003	-0.0	0.0	0.0
81	SX (RS)		0.000	0.000	0.000	0.0	0.0	0.0
	SY (RS)		0.000	0.000	0.000	0.0	0.0	0.0
	RC ENV~1	Max	0.000	0.000	-0.002	0.0	0.0	0.0
		Min	-0.000	-0.000	-0.005	-0.0	-0.0	0.0
	RC ENV~2	Max	0.000	0.000	-0.002	0.0	0.0	0.0
		Min	-0.000	0.000	-0.003	-0.0	0.0	0.0
82	SX (RS)		0.000	0.000	0.000	0.0	0.0	0.0
	SY (RS)		0.000	0.000	0.000	0.0	0.0	0.0
	RC ENV~1	Max	0.000	0.000	-0.002	0.0	0.0	0.0
		Min	-0.000	-0.000	-0.005	-0.0	0.0	0.0
	RC ENV~2	Max	0.000	0.000	-0.002	0.0	0.0	0.0
		Min	-0.000	0.000	-0.003	-0.0	0.0	0.0
83	SX (RS)		0.000	0.000	0.000	0.0	0.0	0.0
	SY (RS)		0.000	0.000	0.000	0.0	0.0	0.0
	RC ENV~1	Max	0.000	0.000	-0.002	0.0	0.0	0.0
		Min	-0.000	-0.000	-0.005	-0.0	0.0	0.0
	RC ENV~2	Max	0.000	0.000	-0.002	0.0	0.0	0.0
		Min	-0.000	0.000	-0.003	-0.0	0.0	0.0
84	SX (RS)		0.000	0.000	0.000	0.0	0.0	0.0
	SY (RS)		0.000	0.000	0.000	0.0	0.0	0.0
	RC ENV~1	Max	0.000	0.000	-0.002	0.0	0.0	0.0
		Min	-0.000	-0.000	-0.005	-0.0	0.0	0.0
	RC ENV~2	Max	0.000	0.000	-0.003	0.0	0.0	0.0
		Min	-0.000	0.000	-0.003	-0.0	0.0	0.0
85	SX (RS)		0.000	0.000	0.000	0.0	0.0	0.0
	SY (RS)		0.000	0.000	0.000	0.0	0.0	0.0
	RC ENV~1	Max	0.000	0.000	-0.002	0.0	0.0	0.0
		Min	-0.000	-0.000	-0.005	-0.0	0.0	0.0
	RC ENV~2	Max	0.000	0.000	-0.003	0.0	0.0	0.0
		Min	-0.000	0.000	-0.004	-0.0	0.0	0.0
86	SX (RS)		0.000	0.000	0.000	0.0	0.0	0.0
	SY (RS)		0.000	0.000	0.000	0.0	0.0	0.0
	RC ENV~1	Max	0.000	0.000	-0.002	0.0	0.0	0.0
		Min	-0.000	-0.000	-0.005	-0.0	0.0	0.0
	RC ENV~2	Max	0.000	0.000	-0.003	0.0	0.0	0.0
		Min	-0.000	0.000	-0.004	-0.0	0.0	0.0
87	SX (RS)		0.000	0.000	0.000	0.0	0.0	0.0
	SY (RS)		0.000	0.000	0.000	0.0	0.0	0.0
	RC ENV~1	Max	0.000	0.000	-0.002	0.0	0.0	0.0
		Min	-0.000	-0.000	-0.005	-0.0	-0.0	0.0
	RC ENV~2	Max	0.000	0.000	-0.002	0.0	0.0	0.0
		Min	-0.000	0.000	-0.003	-0.0	0.0	0.0

88	SX (RS)	0.000	0.000	0.000	0.0	0.0	0.0
	SY (RS)	0.000	0.000	0.000	0.0	0.0	0.0
RC ENV~1	Max	0.000	0.000	-0.002	0.0	0.0	0.0
	Min	-0.000	-0.000	-0.005	-0.0	-0.0	0.0
RC ENV~2	Max	0.000	0.000	-0.002	0.0	0.0	0.0
	Min	-0.000	0.000	-0.003	-0.0	0.0	0.0
89	SX (RS)	0.000	0.000	0.000	0.0	0.0	0.0
	SY (RS)	0.000	0.000	0.000	0.0	0.0	0.0
RC ENV~1	Max	0.000	0.000	-0.002	0.0	0.0	0.0
	Min	-0.000	-0.000	-0.005	-0.0	0.0	0.0
RC ENV~2	Max	0.000	0.000	-0.002	0.0	0.0	0.0
	Min	-0.000	0.000	-0.003	-0.0	0.0	0.0
90	SX (RS)	0.000	0.000	0.000	0.0	0.0	0.0
	SY (RS)	0.000	0.000	0.000	0.0	0.0	0.0
RC ENV~1	Max	0.000	0.000	-0.002	0.0	0.0	0.0
	Min	-0.000	-0.000	-0.005	-0.0	0.0	0.0
RC ENV~2	Max	0.000	0.000	-0.002	0.0	0.0	0.0
	Min	-0.000	0.000	-0.003	-0.0	0.0	0.0
91	SX (RS)	0.000	0.000	0.000	0.0	0.0	0.0
	SY (RS)	0.000	0.000	0.000	0.0	0.0	0.0
RC ENV~1	Max	0.000	0.000	-0.002	0.0	0.0	0.0
	Min	-0.000	-0.000	-0.005	-0.0	0.0	0.0
RC ENV~2	Max	0.000	0.000	-0.002	0.0	0.0	0.0
	Min	-0.000	0.000	-0.004	-0.0	0.0	0.0
92	SX (RS)	0.000	0.000	0.000	0.0	0.0	0.0
	SY (RS)	0.000	0.000	0.000	0.0	0.0	0.0
RC ENV~1	Max	0.000	0.000	-0.002	0.0	0.0	0.0
	Min	-0.000	-0.000	-0.005	-0.0	0.0	0.0
RC ENV~2	Max	0.000	0.000	-0.003	0.0	0.0	0.0
	Min	-0.000	0.000	-0.004	-0.0	0.0	0.0
93	SX (RS)	0.000	0.000	0.000	0.0	0.0	0.0
	SY (RS)	0.000	0.000	0.000	0.0	0.0	0.0
RC ENV~1	Max	0.000	0.000	-0.002	0.0	0.0	0.0
	Min	-0.000	-0.000	-0.005	-0.0	0.0	0.0
RC ENV~2	Max	0.000	0.000	-0.003	0.0	0.0	0.0
	Min	-0.000	0.000	-0.004	-0.0	0.0	0.0
94	SX (RS)	0.000	0.000	0.000	0.0	0.0	0.0
	SY (RS)	0.000	0.000	0.000	0.0	0.0	0.0
RC ENV~1	Max	0.000	0.000	-0.002	-0.0	0.0	0.0
	Min	-0.000	-0.000	-0.004	-0.0	-0.0	0.0
RC ENV~2	Max	0.000	-0.000	-0.002	-0.0	-0.0	0.0
	Min	-0.000	-0.000	-0.003	-0.0	-0.0	0.0
95	SX (RS)	0.000	0.000	0.000	0.0	0.0	0.0
	SY (RS)	0.000	0.000	0.000	0.0	0.0	0.0
RC ENV~1	Max	0.000	0.000	-0.002	-0.0	-0.0	0.0
	Min	-0.000	-0.000	-0.004	-0.0	-0.0	0.0
RC ENV~2	Max	0.000	-0.000	-0.002	-0.0	-0.0	0.0
	Min	-0.000	-0.000	-0.003	-0.0	-0.0	0.0
96	SX (RS)	0.000	0.000	0.000	0.0	0.0	0.0
	SY (RS)	0.000	0.000	0.000	0.0	0.0	0.0
RC ENV~1	Max	0.000	0.000	-0.002	-0.0	-0.0	0.0
	Min	-0.000	-0.000	-0.004	-0.0	-0.0	0.0
RC ENV~2	Max	0.000	-0.000	-0.002	-0.0	-0.0	0.0

	Min	-0.000	-0.000	-0.003	-0.0	-0.0	0.0
97	SX (RS)	0.000	0.000	0.000	0.0	0.0	0.0
	SY (RS)	0.000	0.000	0.000	0.0	0.0	0.0
RC ENV~1	Max	0.000	0.000	-0.002	-0.0	0.0	0.0
	Min	-0.000	-0.000	-0.004	-0.0	-0.0	0.0
RC ENV~2	Max	0.000	-0.000	-0.002	-0.0	-0.0	0.0
	Min	-0.000	-0.000	-0.003	-0.0	-0.0	0.0
98	SX (RS)	0.000	0.000	0.000	0.0	0.0	0.0
	SY (RS)	0.000	0.000	0.000	0.0	0.0	0.0
RC ENV~1	Max	0.000	0.000	-0.002	0.0	0.0	0.0
	Min	-0.000	-0.000	-0.004	-0.0	-0.0	0.0
RC ENV~2	Max	0.000	-0.000	-0.002	-0.0	-0.0	0.0
	Min	-0.000	-0.000	-0.003	-0.0	-0.0	0.0
99	SX (RS)	0.000	0.000	0.000	0.0	0.0	0.0
	SY (RS)	0.000	0.000	0.000	0.0	0.0	0.0
RC ENV~1	Max	0.000	0.000	-0.002	0.0	0.0	0.0
	Min	-0.000	-0.000	-0.004	-0.0	-0.0	0.0
RC ENV~2	Max	0.000	-0.000	-0.002	-0.0	0.0	0.0
	Min	-0.000	-0.000	-0.003	-0.0	0.0	0.0
100	SX (RS)	0.000	0.000	0.000	0.0	0.0	0.0
	SY (RS)	0.000	0.000	0.000	0.0	0.0	0.0
RC ENV~1	Max	0.000	0.000	-0.002	0.0	0.0	0.0
	Min	-0.000	-0.000	-0.004	-0.0	-0.0	0.0
RC ENV~2	Max	0.000	-0.000	-0.002	-0.0	0.0	0.0
	Min	-0.000	-0.000	-0.003	-0.0	0.0	0.0
101	SX (RS)	0.000	0.000	0.000	0.0	0.0	0.0
	SY (RS)	0.000	0.000	0.000	0.0	0.0	0.0
RC ENV~1	Max	0.000	0.000	-0.002	-0.0	0.0	0.0
	Min	-0.000	-0.000	-0.004	-0.0	-0.0	0.0
RC ENV~2	Max	0.000	-0.000	-0.003	-0.0	-0.0	0.0
	Min	-0.000	-0.000	-0.003	-0.0	-0.0	0.0
102	SX (RS)	0.000	0.000	0.000	0.0	0.0	0.0
	SY (RS)	0.000	0.000	0.000	0.0	0.0	0.0
RC ENV~1	Max	0.000	0.000	-0.002	-0.0	-0.0	0.0
	Min	-0.000	-0.000	-0.004	-0.0	-0.0	0.0
RC ENV~2	Max	0.000	-0.000	-0.002	-0.0	-0.0	0.0
	Min	-0.000	-0.000	-0.003	-0.0	-0.0	0.0
103	SX (RS)	0.000	0.000	0.000	0.0	0.0	0.0
	SY (RS)	0.000	0.000	0.000	0.0	0.0	0.0
RC ENV~1	Max	0.000	0.000	-0.002	-0.0	-0.0	0.0
	Min	-0.000	-0.000	-0.004	-0.0	-0.0	0.0
RC ENV~2	Max	0.000	-0.000	-0.002	-0.0	-0.0	0.0
	Min	-0.000	-0.000	-0.003	-0.0	-0.0	0.0
104	SX (RS)	0.000	0.000	0.000	0.0	0.0	0.0
	SY (RS)	0.000	0.000	0.000	0.0	0.0	0.0
RC ENV~1	Max	0.000	0.000	-0.002	0.0	-0.0	0.0
	Min	-0.000	-0.000	-0.004	-0.0	-0.0	0.0
RC ENV~2	Max	0.000	-0.000	-0.002	-0.0	-0.0	0.0
	Min	-0.000	-0.000	-0.003	-0.0	-0.0	0.0
105	SX (RS)	0.000	0.000	0.000	0.0	0.0	0.0
	SY (RS)	0.000	0.000	0.000	0.0	0.0	0.0
RC ENV~1	Max	0.000	0.000	-0.002	0.0	0.0	0.0
	Min	-0.000	-0.000	-0.004	-0.0	-0.0	0.0

	RC ENV~2	Max	0.000	-0.000	-0.002	-0.0	-0.0	0.0
		Min	-0.000	-0.000	-0.003	-0.0	-0.0	0.0
106	SX (RS)		0.000	0.000	0.000	0.0	0.0	0.0
	SY (RS)		0.000	0.000	0.000	0.0	0.0	0.0
	RC ENV~1	Max	0.000	0.000	-0.002	0.0	0.0	0.0
		Min	-0.000	-0.000	-0.004	-0.0	-0.0	0.0
	RC ENV~2	Max	0.000	-0.000	-0.002	-0.0	0.0	0.0
		Min	-0.000	-0.000	-0.003	-0.0	0.0	0.0
107	SX (RS)		0.000	0.000	0.000	0.0	0.0	0.0
	SY (RS)		0.000	0.000	0.000	0.0	0.0	0.0
	RC ENV~1	Max	0.000	0.000	-0.002	0.0	0.0	0.0
		Min	-0.000	-0.000	-0.004	-0.0	-0.0	0.0
	RC ENV~2	Max	0.000	-0.000	-0.002	-0.0	0.0	0.0
		Min	-0.000	-0.000	-0.003	-0.0	0.0	0.0
108	SX (RS)		0.000	0.000	0.000	0.0	0.0	0.0
	SY (RS)		0.000	0.000	0.000	0.0	0.0	0.0
	RC ENV~1	Max	0.000	0.000	-0.002	0.0	0.0	0.0
		Min	-0.000	-0.000	-0.004	-0.0	-0.0	0.0
	RC ENV~2	Max	0.000	-0.000	-0.002	-0.0	0.0	0.0
		Min	-0.000	-0.000	-0.003	-0.0	-0.0	0.0
109	SX (RS)		0.000	0.000	0.000	0.0	0.0	0.0
	SY (RS)		0.000	0.000	0.000	0.0	0.0	0.0
	RC ENV~1	Max	0.000	0.000	-0.002	-0.0	-0.0	0.0
		Min	-0.000	-0.000	-0.004	-0.0	-0.0	0.0
	RC ENV~2	Max	0.000	-0.000	-0.003	-0.0	-0.0	0.0
		Min	-0.000	-0.000	-0.003	-0.0	-0.0	0.0
110	SX (RS)		0.000	0.000	0.000	0.0	0.0	0.0
	SY (RS)		0.000	0.000	0.000	0.0	0.0	0.0
	RC ENV~1	Max	0.000	0.000	-0.002	0.0	-0.0	0.0
		Min	-0.000	-0.000	-0.004	-0.0	-0.0	0.0
	RC ENV~2	Max	0.000	-0.000	-0.003	-0.0	-0.0	0.0
		Min	-0.000	-0.000	-0.003	-0.0	-0.0	0.0
111	SX (RS)		0.000	0.000	0.000	0.0	0.0	0.0
	SY (RS)		0.000	0.000	0.000	0.0	0.0	0.0
	RC ENV~1	Max	0.000	0.000	-0.002	0.0	-0.0	0.0
		Min	-0.000	-0.000	-0.004	-0.0	-0.0	0.0
	RC ENV~2	Max	0.000	-0.000	-0.002	-0.0	-0.0	0.0
		Min	-0.000	-0.000	-0.003	-0.0	-0.0	0.0
112	SX (RS)		0.000	0.000	0.000	0.0	0.0	0.0
	SY (RS)		0.000	0.000	0.000	0.0	0.0	0.0
	RC ENV~1	Max	0.000	0.000	-0.002	0.0	-0.0	0.0
		Min	-0.000	-0.000	-0.004	-0.0	-0.0	0.0
	RC ENV~2	Max	0.000	-0.000	-0.002	-0.0	-0.0	0.0
		Min	-0.000	-0.000	-0.003	-0.0	-0.0	0.0
113	SX (RS)		0.000	0.000	0.000	0.0	0.0	0.0
	SY (RS)		0.000	0.000	0.000	0.0	0.0	0.0
	RC ENV~1	Max	0.000	0.000	-0.002	0.0	0.0	0.0
		Min	-0.000	-0.000	-0.004	-0.0	-0.0	0.0
	RC ENV~2	Max	0.000	-0.000	-0.002	-0.0	-0.0	0.0
		Min	-0.000	-0.000	-0.003	-0.0	-0.0	0.0
114	SX (RS)		0.000	0.000	0.000	0.0	0.0	0.0
	SY (RS)		0.000	0.000	0.000	0.0	0.0	0.0

	RC ENV~1	Max	0.000	0.000	-0.002	0.0	0.0	0.0
		Min	-0.000	-0.000	-0.004	-0.0	-0.0	0.0
	RC ENV~2	Max	0.000	-0.000	-0.002	-0.0	0.0	0.0
		Min	-0.000	-0.000	-0.003	-0.0	0.0	0.0
115	SX (RS)		0.000	0.000	0.000	0.0	0.0	0.0
	SY (RS)		0.000	0.000	0.000	0.0	0.0	0.0
	RC ENV~1	Max	0.000	0.000	-0.002	0.0	0.0	0.0
		Min	-0.000	-0.000	-0.004	-0.0	-0.0	0.0
	RC ENV~2	Max	0.000	-0.000	-0.002	-0.0	0.0	0.0
		Min	-0.000	-0.000	-0.003	-0.0	0.0	0.0
116	SX (RS)		0.000	0.000	0.000	0.0	0.0	0.0
	SY (RS)		0.000	0.000	0.000	0.0	0.0	0.0
	RC ENV~1	Max	0.000	0.000	-0.002	0.0	0.0	0.0
		Min	-0.000	-0.000	-0.004	-0.0	-0.0	0.0
	RC ENV~2	Max	0.000	-0.000	-0.002	-0.0	-0.0	0.0
		Min	-0.000	-0.000	-0.003	-0.0	-0.0	0.0
117	SX (RS)		0.000	0.000	0.000	0.0	0.0	0.0
	SY (RS)		0.000	0.000	0.000	0.0	0.0	0.0
	RC ENV~1	Max	0.000	0.000	-0.002	0.0	0.0	0.0
		Min	-0.000	-0.000	-0.004	-0.0	-0.0	0.0
	RC ENV~2	Max	0.000	-0.000	-0.002	-0.0	-0.0	0.0
		Min	-0.000	-0.000	-0.003	-0.0	-0.0	0.0
118	SX (RS)		0.000	0.000	0.000	0.0	0.0	0.0
	SY (RS)		0.000	0.000	0.000	0.0	0.0	0.0
	RC ENV~1	Max	0.000	0.000	-0.002	-0.0	0.0	0.0
		Min	-0.000	-0.000	-0.004	-0.0	-0.0	0.0
	RC ENV~2	Max	0.000	-0.000	-0.002	-0.0	0.0	0.0
		Min	-0.000	-0.000	-0.003	-0.0	-0.0	0.0
119	SX (RS)		0.000	0.000	0.000	0.0	0.0	0.0
	SY (RS)		0.000	0.000	0.000	0.0	0.0	0.0
	RC ENV~1	Max	0.000	0.000	-0.002	-0.0	0.0	0.0
		Min	-0.000	-0.000	-0.004	-0.0	-0.0	0.0
	RC ENV~2	Max	0.000	-0.000	-0.002	-0.0	0.0	0.0
		Min	-0.000	-0.000	-0.003	-0.0	0.0	0.0
120	SX (RS)		0.000	0.000	0.000	0.0	0.0	0.0
	SY (RS)		0.000	0.000	0.000	0.0	0.0	0.0
	RC ENV~1	Max	0.000	0.000	-0.002	-0.0	0.0	0.0
		Min	-0.000	-0.000	-0.004	-0.0	0.0	0.0
	RC ENV~2	Max	0.000	-0.000	-0.002	-0.0	0.0	0.0
		Min	-0.000	-0.000	-0.003	-0.0	0.0	0.0
121	SX (RS)		0.000	0.000	0.000	0.0	0.0	0.0
	SY (RS)		0.000	0.000	0.000	0.0	0.0	0.0
	RC ENV~1	Max	0.000	0.000	-0.002	-0.0	0.0	0.0
		Min	-0.000	-0.000	-0.004	-0.0	0.0	0.0
	RC ENV~2	Max	0.000	-0.000	-0.002	-0.0	0.0	0.0
		Min	-0.000	-0.000	-0.003	-0.0	0.0	0.0
122	SX (RS)		0.000	0.000	0.000	0.0	0.0	0.0
	SY (RS)		0.000	0.000	0.000	0.0	0.0	0.0
	RC ENV~1	Max	0.000	0.000	-0.002	-0.0	0.0	0.0
		Min	-0.000	-0.000	-0.004	-0.0	-0.0	0.0
	RC ENV~2	Max	0.000	-0.000	-0.002	-0.0	0.0	0.0
		Min	-0.000	-0.000	-0.003	-0.0	0.0	0.0
123	SX (RS)		0.000	0.000	0.000	0.0	0.0	0.0

	SY (RS)	0.000	0.000	0.000	0.0	0.0	0.0
RC ENV~1	Max	0.000	0.000	-0.002	0.0	0.0	0.0
	Min	-0.000	-0.000	-0.004	-0.0	-0.0	0.0
RC ENV~2	Max	0.000	-0.000	-0.002	-0.0	-0.0	0.0
	Min	-0.000	-0.000	-0.003	-0.0	-0.0	0.0
124	SX (RS)	0.000	0.000	0.000	0.0	0.0	0.0
	SY (RS)	0.000	0.000	0.000	0.0	0.0	0.0
RC ENV~1	Max	0.000	0.000	-0.002	0.0	0.0	0.0
	Min	-0.000	-0.000	-0.004	-0.0	-0.0	0.0
RC ENV~2	Max	0.000	-0.000	-0.002	-0.0	-0.0	0.0
	Min	-0.000	-0.000	-0.003	-0.0	-0.0	0.0
125	SX (RS)	0.000	0.000	0.000	0.0	0.0	0.0
	SY (RS)	0.000	0.000	0.000	0.0	0.0	0.0
RC ENV~1	Max	0.000	0.000	-0.002	0.0	0.0	0.0
	Min	-0.000	-0.000	-0.004	-0.0	-0.0	0.0
RC ENV~2	Max	0.000	-0.000	-0.002	-0.0	0.0	0.0
	Min	-0.000	-0.000	-0.003	-0.0	-0.0	0.0
126	SX (RS)	0.000	0.000	0.000	0.0	0.0	0.0
	SY (RS)	0.000	0.000	0.000	0.0	0.0	0.0
RC ENV~1	Max	0.000	0.000	-0.002	-0.0	0.0	0.0
	Min	-0.000	-0.000	-0.004	-0.0	0.0	0.0
RC ENV~2	Max	0.000	-0.000	-0.002	-0.0	0.0	0.0
	Min	-0.000	-0.000	-0.003	-0.0	0.0	0.0
127	SX (RS)	0.000	0.000	0.000	0.0	0.0	0.0
	SY (RS)	0.000	0.000	0.000	0.0	0.0	0.0
RC ENV~1	Max	0.000	0.000	-0.002	-0.0	0.0	0.0
	Min	-0.000	-0.000	-0.004	-0.0	0.0	0.0
RC ENV~2	Max	0.000	-0.000	-0.002	-0.0	0.0	0.0
	Min	-0.000	-0.000	-0.003	-0.0	0.0	0.0
128	SX (RS)	0.000	0.000	0.000	0.0	0.0	0.0
	SY (RS)	0.000	0.000	0.000	0.0	0.0	0.0
RC ENV~1	Max	0.000	0.000	-0.002	-0.0	0.0	0.0
	Min	-0.000	-0.000	-0.004	-0.0	0.0	0.0
RC ENV~2	Max	0.000	-0.000	-0.002	-0.0	0.0	0.0
	Min	-0.000	-0.000	-0.003	-0.0	0.0	0.0
129	SX (RS)	0.000	0.000	0.000	0.0	0.0	0.0
	SY (RS)	0.000	0.000	0.000	0.0	0.0	0.0
RC ENV~1	Max	0.000	0.000	-0.002	-0.0	0.0	0.0
	Min	-0.000	-0.000	-0.004	-0.0	-0.0	0.0
RC ENV~2	Max	0.000	-0.000	-0.003	-0.0	0.0	0.0
	Min	-0.000	-0.000	-0.003	-0.0	0.0	0.0
130	SX (RS)	0.000	0.000	0.000	0.0	0.0	0.0
	SY (RS)	0.000	0.000	0.000	0.0	0.0	0.0
RC ENV~1	Max	0.000	0.000	-0.002	0.0	-0.0	0.0
	Min	-0.000	-0.000	-0.004	-0.0	-0.0	0.0
RC ENV~2	Max	0.000	-0.000	-0.002	-0.0	-0.0	0.0
	Min	-0.000	-0.000	-0.003	-0.0	-0.0	0.0
131	SX (RS)	0.000	0.000	0.000	0.0	0.0	0.0
	SY (RS)	0.000	0.000	0.000	0.0	0.0	0.0
RC ENV~1	Max	0.000	0.000	-0.002	0.0	0.0	0.0
	Min	-0.000	-0.000	-0.004	-0.0	-0.0	0.0
RC ENV~2	Max	0.000	-0.000	-0.002	-0.0	-0.0	0.0
	Min	-0.000	-0.000	-0.003	-0.0	-0.0	0.0

132	SX (RS)	0.000	0.000	0.000	0.0	0.0	0.0
	SY (RS)	0.000	0.000	0.000	0.0	0.0	0.0
RC ENV~1	Max	0.000	0.000	-0.002	0.0	0.0	0.0
	Min	-0.000	-0.000	-0.004	-0.0	-0.0	0.0
RC ENV~2	Max	0.000	-0.000	-0.002	-0.0	0.0	0.0
	Min	-0.000	-0.000	-0.003	-0.0	-0.0	0.0
133	SX (RS)	0.000	0.000	0.000	0.0	0.0	0.0
	SY (RS)	0.000	0.000	0.000	0.0	0.0	0.0
RC ENV~1	Max	0.000	0.000	-0.002	0.0	0.0	0.0
	Min	-0.000	-0.000	-0.004	-0.0	0.0	0.0
RC ENV~2	Max	0.000	-0.000	-0.002	-0.0	0.0	0.0
	Min	-0.000	-0.000	-0.003	-0.0	0.0	0.0
134	SX (RS)	0.000	0.000	0.000	0.0	0.0	0.0
	SY (RS)	0.000	0.000	0.000	0.0	0.0	0.0
RC ENV~1	Max	0.000	0.000	-0.002	-0.0	0.0	0.0
	Min	-0.000	-0.000	-0.004	-0.0	0.0	0.0
RC ENV~2	Max	0.000	-0.000	-0.002	-0.0	0.0	0.0
	Min	-0.000	-0.000	-0.003	-0.0	0.0	0.0
135	SX (RS)	0.000	0.000	0.000	0.0	0.0	0.0
	SY (RS)	0.000	0.000	0.000	0.0	0.0	0.0
RC ENV~1	Max	0.000	0.000	-0.002	-0.0	0.0	0.0
	Min	-0.000	-0.000	-0.004	-0.0	0.0	0.0
RC ENV~2	Max	0.000	-0.000	-0.003	-0.0	0.0	0.0
	Min	-0.000	-0.000	-0.003	-0.0	0.0	0.0
136	SX (RS)	0.000	0.000	0.000	0.0	0.0	0.0
	SY (RS)	0.000	0.000	0.000	0.0	0.0	0.0
RC ENV~1	Max	0.000	0.000	-0.002	-0.0	0.0	0.0
	Min	-0.000	-0.000	-0.004	-0.0	0.0	0.0
RC ENV~2	Max	0.000	-0.000	-0.003	-0.0	0.0	0.0
	Min	-0.000	-0.000	-0.003	-0.0	0.0	0.0
137	SX (RS)	0.000	0.000	0.000	0.0	0.0	0.0
	SY (RS)	0.000	0.000	0.000	0.0	0.0	0.0
RC ENV~1	Max	0.000	0.000	-0.002	0.0	0.0	0.0
	Min	-0.000	-0.000	-0.004	-0.0	-0.0	0.0
RC ENV~2	Max	0.000	0.000	-0.003	-0.0	-0.0	0.0
	Min	-0.000	-0.000	-0.003	-0.0	-0.0	0.0
138	SX (RS)	0.000	0.000	0.000	0.0	0.0	0.0
	SY (RS)	0.000	0.000	0.000	0.0	0.0	0.0
RC ENV~1	Max	0.000	0.000	-0.002	0.0	0.0	0.0
	Min	-0.000	-0.000	-0.004	-0.0	-0.0	0.0
RC ENV~2	Max	0.000	-0.000	-0.003	-0.0	-0.0	0.0
	Min	-0.000	-0.000	-0.003	-0.0	-0.0	0.0
139	SX (RS)	0.000	0.000	0.000	0.0	0.0	0.0
	SY (RS)	0.000	0.000	0.000	0.0	0.0	0.0
RC ENV~1	Max	0.000	0.000	-0.002	0.0	0.0	0.0
	Min	-0.000	-0.000	-0.004	-0.0	-0.0	0.0
RC ENV~2	Max	0.000	-0.000	-0.003	-0.0	-0.0	0.0
	Min	-0.000	-0.000	-0.003	-0.0	-0.0	0.0
140	SX (RS)	0.000	0.000	0.000	0.0	0.0	0.0
	SY (RS)	0.000	0.000	0.000	0.0	0.0	0.0
RC ENV~1	Max	0.000	0.000	-0.002	0.0	0.0	0.0
	Min	-0.000	-0.000	-0.004	-0.0	-0.0	0.0

	RC ENV~2	Max	0.000	0.000	-0.003	-0.0	-0.0	0.0
		Min	-0.000	-0.000	-0.003	-0.0	-0.0	0.0
141	SX (RS)		0.000	0.000	0.000	0.0	0.0	0.0
	SY (RS)		0.000	0.000	0.000	0.0	0.0	0.0
	RC ENV~1	Max	0.000	0.000	-0.002	0.0	0.0	0.0
		Min	-0.000	-0.000	-0.004	-0.0	-0.0	0.0
	RC ENV~2	Max	0.000	-0.000	-0.003	-0.0	-0.0	0.0
		Min	-0.000	-0.000	-0.003	-0.0	-0.0	0.0
142	SX (RS)		0.000	0.000	0.000	0.0	0.0	0.0
	SY (RS)		0.000	0.000	0.000	0.0	0.0	0.0
	RC ENV~1	Max	0.000	0.000	-0.003	0.0	0.0	0.0
		Min	-0.000	-0.000	-0.004	-0.0	-0.0	0.0
	RC ENV~2	Max	0.000	-0.000	-0.003	-0.0	-0.0	0.0
		Min	-0.000	-0.000	-0.003	-0.0	-0.0	0.0
143	SX (RS)		0.000	0.000	0.000	0.0	0.0	0.0
	SY (RS)		0.000	0.000	0.000	0.0	0.0	0.0
	RC ENV~1	Max	0.000	0.000	-0.003	0.0	0.0	0.0
		Min	-0.000	-0.000	-0.004	-0.0	-0.0	0.0
	RC ENV~2	Max	0.000	0.000	-0.003	-0.0	-0.0	0.0
		Min	-0.000	-0.000	-0.003	-0.0	-0.0	0.0
144	SX (RS)		0.000	0.000	0.000	0.0	0.0	0.0
	SY (RS)		0.000	0.000	0.000	0.0	0.0	0.0
	RC ENV~1	Max	0.000	0.000	-0.003	0.0	0.0	0.0
		Min	-0.000	-0.000	-0.004	-0.0	-0.0	0.0
	RC ENV~2	Max	0.000	-0.000	-0.003	-0.0	-0.0	0.0
		Min	-0.000	-0.000	-0.003	-0.0	-0.0	0.0
145	SX (RS)		0.000	0.000	0.000	0.0	0.0	0.0
	SY (RS)		0.000	0.000	0.000	0.0	0.0	0.0
	RC ENV~1	Max	0.000	0.000	-0.003	0.0	0.0	0.0
		Min	-0.000	-0.000	-0.004	-0.0	-0.0	0.0
	RC ENV~2	Max	0.000	-0.000	-0.003	-0.0	-0.0	0.0
		Min	-0.000	-0.000	-0.003	-0.0	-0.0	0.0
146	SX (RS)		0.000	0.000	0.000	0.0	0.0	0.0
	SY (RS)		0.000	0.000	0.000	0.0	0.0	0.0
	RC ENV~1	Max	0.000	0.000	-0.003	0.0	0.0	0.0
		Min	-0.000	-0.000	-0.004	-0.0	-0.0	0.0
	RC ENV~2	Max	0.000	0.000	-0.003	-0.0	-0.0	0.0
		Min	-0.000	-0.000	-0.003	-0.0	-0.0	0.0
147	SX (RS)		0.000	0.000	0.000	0.0	0.0	0.0
	SY (RS)		0.000	0.000	0.000	0.0	0.0	0.0
	RC ENV~1	Max	0.000	0.000	-0.003	0.0	0.0	0.0
		Min	-0.000	-0.000	-0.004	-0.0	-0.0	0.0
	RC ENV~2	Max	0.000	-0.000	-0.003	-0.0	-0.0	0.0
		Min	-0.000	-0.000	-0.003	-0.0	-0.0	0.0
148	SX (RS)		0.000	0.000	0.000	0.0	0.0	0.0
	SY (RS)		0.000	0.000	0.000	0.0	0.0	0.0
	RC ENV~1	Max	0.000	0.000	-0.003	-0.0	0.0	0.0
		Min	-0.000	-0.000	-0.004	-0.0	-0.0	0.0
	RC ENV~2	Max	0.000	-0.000	-0.003	-0.0	-0.0	0.0
		Min	-0.000	-0.000	-0.003	-0.0	-0.0	0.0
149	SX (RS)		0.000	0.000	0.000	0.0	0.0	0.0
	SY (RS)		0.000	0.000	0.000	0.0	0.0	0.0
	RC ENV~1	Max	0.000	0.000	-0.003	0.0	0.0	0.0

	Min	-0.000	-0.000	-0.004	-0.0	-0.0	0.0
RC ENV~2	Max	0.000	0.000	-0.003	0.0	-0.0	0.0
	Min	-0.000	-0.000	-0.003	-0.0	-0.0	0.0
150	SX (RS)	0.000	0.000	0.000	0.0	0.0	0.0
	SY (RS)	0.000	0.000	0.000	0.0	0.0	0.0
RC ENV~1	Max	0.000	0.000	-0.003	0.0	0.0	0.0
	Min	-0.000	-0.000	-0.004	-0.0	-0.0	0.0
RC ENV~2	Max	0.000	-0.000	-0.003	-0.0	-0.0	0.0
	Min	-0.000	-0.000	-0.003	-0.0	-0.0	0.0
151	SX (RS)	0.000	0.000	0.000	0.0	0.0	0.0
	SY (RS)	0.000	0.000	0.000	0.0	0.0	0.0
RC ENV~1	Max	0.000	0.000	-0.003	-0.0	0.0	0.0
	Min	-0.000	-0.000	-0.004	-0.0	-0.0	0.0
RC ENV~2	Max	0.000	-0.000	-0.003	-0.0	-0.0	0.0
	Min	-0.000	-0.000	-0.003	-0.0	-0.0	0.0
152	SX (RS)	0.000	0.000	0.000	0.0	0.0	0.0
	SY (RS)	0.000	0.000	0.000	0.0	0.0	0.0
RC ENV~1	Max	0.000	0.000	-0.003	0.0	0.0	0.0
	Min	-0.000	-0.000	-0.004	-0.0	-0.0	0.0
RC ENV~2	Max	0.000	0.000	-0.003	0.0	0.0	0.0
	Min	-0.000	-0.000	-0.003	-0.0	-0.0	0.0
153	SX (RS)	0.000	0.000	0.000	0.0	0.0	0.0
	SY (RS)	0.000	0.000	0.000	0.0	0.0	0.0
RC ENV~1	Max	0.000	0.000	-0.003	0.0	0.0	0.0
	Min	-0.000	-0.000	-0.004	-0.0	-0.0	0.0
RC ENV~2	Max	0.000	-0.000	-0.003	0.0	0.0	0.0
	Min	-0.000	-0.000	-0.003	-0.0	-0.0	0.0
154	SX (RS)	0.000	0.000	0.000	0.0	0.0	0.0
	SY (RS)	0.000	0.000	0.000	0.0	0.0	0.0
RC ENV~1	Max	0.000	0.000	-0.003	0.0	0.0	0.0
	Min	-0.000	-0.000	-0.004	-0.0	-0.0	0.0
RC ENV~2	Max	0.000	-0.000	-0.003	0.0	-0.0	0.0
	Min	-0.000	-0.000	-0.003	-0.0	-0.0	0.0
155	SX (RS)	0.000	0.000	0.000	0.0	0.0	0.0
	SY (RS)	0.000	0.000	0.000	0.0	0.0	0.0
RC ENV~1	Max	0.000	0.000	-0.003	0.0	0.0	0.0
	Min	-0.000	-0.000	-0.004	-0.0	-0.0	0.0
RC ENV~2	Max	0.000	0.000	-0.003	0.0	0.0	0.0
	Min	-0.000	-0.000	-0.003	0.0	-0.0	0.0
156	SX (RS)	0.000	0.000	0.000	0.0	0.0	0.0
	SY (RS)	0.000	0.000	0.000	0.0	0.0	0.0
RC ENV~1	Max	0.000	0.000	-0.003	0.0	0.0	0.0
	Min	-0.000	-0.000	-0.004	0.0	-0.0	0.0
RC ENV~2	Max	0.000	0.000	-0.003	0.0	0.0	0.0
	Min	-0.000	-0.000	-0.003	0.0	-0.0	0.0
157	SX (RS)	0.000	0.000	0.000	0.0	0.0	0.0
	SY (RS)	0.000	0.000	0.000	0.0	0.0	0.0
RC ENV~1	Max	0.000	0.000	-0.003	0.0	0.0	0.0
	Min	-0.000	-0.000	-0.004	0.0	-0.0	0.0
RC ENV~2	Max	0.000	0.000	-0.003	0.0	0.0	0.0
	Min	-0.000	-0.000	-0.003	0.0	-0.0	0.0
158	SX (RS)	0.000	0.000	0.000	0.0	0.0	0.0
	SY (RS)	0.000	0.000	0.000	0.0	0.0	0.0

	RC ENV~1	Max	0.000	0.000	-0.003	0.0	0.0	0.0
		Min	-0.000	-0.000	-0.004	0.0	-0.0	0.0
	RC ENV~2	Max	0.000	-0.000	-0.003	0.0	-0.0	0.0
		Min	-0.000	-0.000	-0.003	0.0	-0.0	0.0
159	SX (RS)		0.000	0.000	0.000	0.0	0.0	0.0
	SY (RS)		0.000	0.000	0.000	0.0	0.0	0.0
	RC ENV~1	Max	0.000	0.000	-0.003	0.0	0.0	0.0
		Min	-0.000	-0.000	-0.004	0.0	-0.0	0.0
	RC ENV~2	Max	0.000	0.000	-0.003	0.0	0.0	0.0
		Min	-0.000	-0.000	-0.003	0.0	-0.0	0.0
160	SX (RS)		0.000	0.000	0.000	0.0	0.0	0.0
	SY (RS)		0.000	0.000	0.000	0.0	0.0	0.0
	RC ENV~1	Max	0.000	0.000	-0.003	0.0	0.0	0.0
		Min	-0.000	-0.000	-0.004	0.0	-0.0	0.0
	RC ENV~2	Max	0.000	0.000	-0.003	0.0	0.0	0.0
		Min	-0.000	-0.000	-0.003	0.0	-0.0	0.0
161	SX (RS)		0.000	0.000	0.000	0.0	0.0	0.0
	SY (RS)		0.000	0.000	0.000	0.0	0.0	0.0
	RC ENV~1	Max	0.000	0.000	-0.003	0.0	0.0	0.0
		Min	-0.000	-0.000	-0.004	0.0	-0.0	0.0
	RC ENV~2	Max	0.000	0.000	-0.003	0.0	-0.0	0.0
		Min	-0.000	-0.000	-0.003	0.0	-0.0	0.0
162	SX (RS)		0.000	0.000	0.000	0.0	0.0	0.0
	SY (RS)		0.000	0.000	0.000	0.0	0.0	0.0
	RC ENV~1	Max	0.000	0.000	-0.003	0.0	0.0	0.0
		Min	-0.000	-0.000	-0.004	0.0	-0.0	0.0
	RC ENV~2	Max	0.000	0.000	-0.003	0.0	0.0	0.0
		Min	-0.000	-0.000	-0.003	0.0	-0.0	0.0
163	SX (RS)		0.000	0.000	0.000	0.0	0.0	0.0
	SY (RS)		0.000	0.000	0.000	0.0	0.0	0.0
	RC ENV~1	Max	0.000	0.000	-0.003	0.0	0.0	0.0
		Min	-0.000	-0.000	-0.004	0.0	-0.0	0.0
	RC ENV~2	Max	0.000	0.000	-0.003	0.0	0.0	0.0
		Min	-0.000	-0.000	-0.003	0.0	-0.0	0.0
164	SX (RS)		0.000	0.000	0.000	0.0	0.0	0.0
	SY (RS)		0.000	0.000	0.000	0.0	0.0	0.0
	RC ENV~1	Max	0.000	0.000	-0.003	0.0	0.0	0.0
		Min	-0.000	-0.000	-0.004	0.0	-0.0	0.0
	RC ENV~2	Max	0.000	0.000	-0.003	0.0	-0.0	0.0
		Min	-0.000	-0.000	-0.003	0.0	-0.0	0.0
165	SX (RS)		0.000	0.000	0.000	0.0	0.0	0.0
	SY (RS)		0.000	0.000	0.000	0.0	0.0	0.0
	RC ENV~1	Max	0.000	0.000	-0.002	0.0	0.0	0.0
		Min	-0.000	-0.000	-0.004	0.0	-0.0	0.0
	RC ENV~2	Max	0.000	0.000	-0.003	0.0	0.0	0.0
		Min	-0.000	0.000	-0.003	0.0	-0.0	0.0
166	SX (RS)		0.000	0.000	0.000	0.0	0.0	0.0
	SY (RS)		0.000	0.000	0.000	0.0	0.0	0.0
	RC ENV~1	Max	0.000	0.000	-0.003	0.0	0.0	0.0
		Min	-0.000	-0.000	-0.004	0.0	-0.0	0.0
	RC ENV~2	Max	0.000	0.000	-0.003	0.0	0.0	0.0
		Min	-0.000	0.000	-0.003	0.0	-0.0	0.0

167	SX (RS)	0.000	0.000	0.000	0.0	0.0	0.0
	SY (RS)	0.000	0.000	0.000	0.0	0.0	0.0
RC ENV~1	Max	0.000	0.000	-0.003	0.0	0.0	0.0
	Min	-0.000	-0.000	-0.004	0.0	-0.0	0.0
RC ENV~2	Max	0.000	0.000	-0.003	0.0	-0.0	0.0
	Min	-0.000	0.000	-0.003	0.0	-0.0	0.0
168	SX (RS)	0.000	0.000	0.000	0.0	0.0	0.0
	SY (RS)	0.000	0.000	0.000	0.0	0.0	0.0
RC ENV~1	Max	0.000	0.000	-0.002	0.0	0.0	0.0
	Min	-0.000	-0.000	-0.004	0.0	-0.0	0.0
RC ENV~2	Max	0.000	0.000	-0.003	0.0	0.0	0.0
	Min	-0.000	-0.000	-0.003	0.0	-0.0	0.0
169	SX (RS)	0.000	0.000	0.000	0.0	0.0	0.0
	SY (RS)	0.000	0.000	0.000	0.0	0.0	0.0
RC ENV~1	Max	0.000	0.000	-0.002	0.0	0.0	0.0
	Min	-0.000	-0.000	-0.004	0.0	-0.0	0.0
RC ENV~2	Max	0.000	0.000	-0.003	0.0	0.0	0.0
	Min	-0.000	0.000	-0.003	0.0	-0.0	0.0
170	SX (RS)	0.000	0.000	0.000	0.0	0.0	0.0
	SY (RS)	0.000	0.000	0.000	0.0	0.0	0.0
RC ENV~1	Max	0.000	0.000	-0.003	0.0	0.0	0.0
	Min	-0.000	-0.000	-0.004	0.0	-0.0	0.0
RC ENV~2	Max	0.000	0.000	-0.003	0.0	-0.0	0.0
	Min	-0.000	0.000	-0.003	0.0	-0.0	0.0
171	SX (RS)	0.000	0.000	0.000	0.0	0.0	0.0
	SY (RS)	0.000	0.000	0.000	0.0	0.0	0.0
RC ENV~1	Max	0.000	0.000	-0.002	0.0	0.0	0.0
	Min	-0.000	-0.000	-0.004	0.0	-0.0	0.0
RC ENV~2	Max	0.000	0.000	-0.003	0.0	0.0	0.0
	Min	-0.000	-0.000	-0.003	0.0	-0.0	0.0
172	SX (RS)	0.000	0.000	0.000	0.0	0.0	0.0
	SY (RS)	0.000	0.000	0.000	0.0	0.0	0.0
RC ENV~1	Max	0.000	0.000	-0.002	0.0	0.0	0.0
	Min	-0.000	-0.000	-0.004	0.0	-0.0	0.0
RC ENV~2	Max	0.000	0.000	-0.003	0.0	0.0	0.0
	Min	-0.000	0.000	-0.003	0.0	-0.0	0.0
173	SX (RS)	0.000	0.000	0.000	0.0	0.0	0.0
	SY (RS)	0.000	0.000	0.000	0.0	0.0	0.0
RC ENV~1	Max	0.000	0.000	-0.002	0.0	0.0	0.0
	Min	-0.000	-0.000	-0.004	0.0	-0.0	0.0
RC ENV~2	Max	0.000	0.000	-0.003	0.0	-0.0	0.0
	Min	-0.000	0.000	-0.003	0.0	-0.0	0.0
174	SX (RS)	0.000	0.000	0.000	0.0	0.0	0.0
	SY (RS)	0.000	0.000	0.000	0.0	0.0	0.0
RC ENV~1	Max	0.000	0.000	-0.002	0.0	0.0	0.0
	Min	-0.000	-0.000	-0.004	0.0	-0.0	0.0
RC ENV~2	Max	0.000	0.000	-0.003	0.0	0.0	0.0
	Min	-0.000	0.000	-0.003	0.0	-0.0	0.0
175	SX (RS)	0.000	0.000	0.000	0.0	0.0	0.0
	SY (RS)	0.000	0.000	0.000	0.0	0.0	0.0
RC ENV~1	Max	0.000	0.000	-0.002	0.0	0.0	0.0
	Min	-0.000	-0.000	-0.004	0.0	-0.0	0.0
RC ENV~2	Max	0.000	0.000	-0.003	0.0	0.0	0.0

	Min	-0.000	-0.000	-0.003	0.0	-0.0	0.0
176	SX (RS)	0.000	0.000	0.000	0.0	0.0	0.0
	SY (RS)	0.000	0.000	0.000	0.0	0.0	0.0
RC ENV~1	Max	0.000	0.000	-0.002	0.0	0.0	0.0
	Min	-0.000	-0.000	-0.004	0.0	-0.0	0.0
RC ENV~2	Max	0.000	0.000	-0.003	0.0	0.0	0.0
	Min	-0.000	0.000	-0.003	0.0	-0.0	0.0
177	SX (RS)	0.000	0.000	0.000	0.0	0.0	0.0
	SY (RS)	0.000	0.000	0.000	0.0	0.0	0.0
RC ENV~1	Max	0.000	0.000	-0.002	0.0	0.0	0.0
	Min	-0.000	-0.000	-0.004	0.0	-0.0	0.0
RC ENV~2	Max	0.000	0.000	-0.003	0.0	0.0	0.0
	Min	-0.000	0.000	-0.003	0.0	-0.0	0.0
178	SX (RS)	0.000	0.000	0.000	0.0	0.0	0.0
	SY (RS)	0.000	0.000	0.000	0.0	0.0	0.0
RC ENV~1	Max	0.000	0.000	-0.002	0.0	0.0	0.0
	Min	-0.000	-0.000	-0.004	0.0	-0.0	0.0
RC ENV~2	Max	0.000	0.000	-0.003	0.0	0.0	0.0
	Min	-0.000	-0.000	-0.003	0.0	-0.0	0.0
179	SX (RS)	0.000	0.000	0.000	0.0	0.0	0.0
	SY (RS)	0.000	0.000	0.000	0.0	0.0	0.0
RC ENV~1	Max	0.000	0.000	-0.002	0.0	0.0	0.0
	Min	-0.000	-0.000	-0.004	0.0	-0.0	0.0
RC ENV~2	Max	0.000	0.000	-0.003	0.0	0.0	0.0
	Min	-0.000	0.000	-0.003	0.0	-0.0	0.0
180	SX (RS)	0.000	0.000	0.000	0.0	0.0	0.0
	SY (RS)	0.000	0.000	0.000	0.0	0.0	0.0
RC ENV~1	Max	0.000	0.000	-0.002	0.0	0.0	0.0
	Min	-0.000	-0.000	-0.004	0.0	-0.0	0.0
RC ENV~2	Max	0.000	0.000	-0.002	0.0	0.0	0.0
	Min	-0.000	0.000	-0.003	0.0	-0.0	0.0
181	SX (RS)	0.000	0.000	0.000	0.0	0.0	0.0
	SY (RS)	0.000	0.000	0.000	0.0	0.0	0.0
RC ENV~1	Max	0.000	0.000	-0.002	0.0	0.0	0.0
	Min	-0.000	-0.000	-0.004	0.0	-0.0	0.0
RC ENV~2	Max	0.000	0.000	-0.003	0.0	0.0	0.0
	Min	-0.000	-0.000	-0.003	0.0	-0.0	0.0
182	SX (RS)	0.000	0.000	0.000	0.0	0.0	0.0
	SY (RS)	0.000	0.000	0.000	0.0	0.0	0.0
RC ENV~1	Max	0.000	0.000	-0.002	0.0	0.0	0.0
	Min	-0.000	-0.000	-0.004	0.0	-0.0	0.0
RC ENV~2	Max	0.000	0.000	-0.002	0.0	0.0	0.0
	Min	-0.000	0.000	-0.003	0.0	-0.0	0.0
183	SX (RS)	0.000	0.000	0.000	0.0	0.0	0.0
	SY (RS)	0.000	0.000	0.000	0.0	0.0	0.0
RC ENV~1	Max	0.000	0.000	-0.002	0.0	0.0	0.0
	Min	-0.000	-0.000	-0.004	0.0	-0.0	0.0
RC ENV~2	Max	0.000	0.000	-0.002	0.0	0.0	0.0
	Min	-0.000	0.000	-0.003	0.0	-0.0	0.0
184	SX (RS)	0.000	0.000	0.000	0.0	0.0	0.0
	SY (RS)	0.000	0.000	0.000	0.0	0.0	0.0
RC ENV~1	Max	0.000	0.000	-0.002	0.0	0.0	0.0
	Min	-0.000	-0.000	-0.004	-0.0	-0.0	0.0

	RC ENV~2	Max	0.000	0.000	-0.002	0.0	0.0	0.0
		Min	-0.000	-0.000	-0.003	0.0	-0.0	0.0
185	SX (RS)		0.000	0.000	0.000	0.0	0.0	0.0
	SY (RS)		0.000	0.000	0.000	0.0	0.0	0.0
	RC ENV~1	Max	0.000	0.000	-0.002	0.0	0.0	0.0
		Min	-0.000	-0.000	-0.004	-0.0	-0.0	0.0
	RC ENV~2	Max	0.000	0.000	-0.002	0.0	0.0	0.0
		Min	-0.000	0.000	-0.003	0.0	-0.0	0.0
186	SX (RS)		0.000	0.000	0.000	0.0	0.0	0.0
	SY (RS)		0.000	0.000	0.000	0.0	0.0	0.0
	RC ENV~1	Max	0.000	0.000	-0.002	0.0	0.0	0.0
		Min	-0.000	-0.000	-0.004	-0.0	-0.0	0.0
	RC ENV~2	Max	0.000	0.000	-0.002	0.0	0.0	0.0
		Min	-0.000	0.000	-0.003	0.0	-0.0	0.0
187	SX (RS)		0.000	0.000	0.000	0.0	0.0	0.0
	SY (RS)		0.000	0.000	0.000	0.0	0.0	0.0
	RC ENV~1	Max	0.000	0.000	-0.002	0.0	0.0	0.0
		Min	-0.000	-0.000	-0.004	-0.0	-0.0	0.0
	RC ENV~2	Max	0.000	0.000	-0.002	0.0	0.0	0.0
		Min	-0.000	-0.000	-0.003	0.0	-0.0	0.0
188	SX (RS)		0.000	0.000	0.000	0.0	0.0	0.0
	SY (RS)		0.000	0.000	0.000	0.0	0.0	0.0
	RC ENV~1	Max	0.000	0.000	-0.002	0.0	0.0	0.0
		Min	-0.000	-0.000	-0.004	-0.0	-0.0	0.0
	RC ENV~2	Max	0.000	0.000	-0.002	0.0	0.0	0.0
		Min	-0.000	0.000	-0.003	0.0	-0.0	0.0
189	SX (RS)		0.000	0.000	0.000	0.0	0.0	0.0
	SY (RS)		0.000	0.000	0.000	0.0	0.0	0.0
	RC ENV~1	Max	0.000	0.000	-0.002	0.0	0.0	0.0
		Min	-0.000	-0.000	-0.004	-0.0	-0.0	0.0
	RC ENV~2	Max	0.000	0.000	-0.002	0.0	0.0	0.0
		Min	-0.000	0.000	-0.003	0.0	-0.0	0.0
190	SX (RS)		0.000	0.000	0.000	0.0	0.0	0.0
	SY (RS)		0.000	0.000	0.000	0.0	0.0	0.0
	RC ENV~1	Max	0.000	0.000	-0.002	0.0	0.0	0.0
		Min	-0.000	-0.000	-0.004	-0.0	-0.0	0.0
	RC ENV~2	Max	0.000	0.000	-0.002	0.0	0.0	0.0
		Min	-0.000	-0.000	-0.003	0.0	-0.0	0.0
191	SX (RS)		0.000	0.000	0.000	0.0	0.0	0.0
	SY (RS)		0.000	0.000	0.000	0.0	0.0	0.0
	RC ENV~1	Max	0.000	0.000	-0.002	0.0	0.0	0.0
		Min	-0.000	-0.000	-0.004	-0.0	-0.0	0.0
	RC ENV~2	Max	0.000	0.000	-0.002	0.0	0.0	0.0
		Min	-0.000	0.000	-0.003	0.0	-0.0	0.0
192	SX (RS)		0.000	0.000	0.000	0.0	0.0	0.0
	SY (RS)		0.000	0.000	0.000	0.0	0.0	0.0
	RC ENV~1	Max	0.000	0.000	-0.002	0.0	0.0	0.0
		Min	-0.000	-0.000	-0.004	-0.0	-0.0	0.0
	RC ENV~2	Max	0.000	0.000	-0.002	0.0	0.0	0.0
		Min	-0.000	0.000	-0.003	-0.0	-0.0	0.0
193	SX (RS)		0.000	0.000	0.000	0.0	0.0	0.0
	SY (RS)		0.000	0.000	0.000	0.0	0.0	0.0

	RC ENV~1	Max	0.000	0.000	-0.002	0.0	0.0	0.0
		Min	-0.000	-0.000	-0.004	-0.0	-0.0	0.0
	RC ENV~2	Max	0.000	-0.000	-0.003	-0.0	0.0	0.0
		Min	-0.000	-0.000	-0.003	-0.0	0.0	0.0
194	SX (RS)		0.000	0.000	0.000	0.0	0.0	0.0
	SY (RS)		0.000	0.000	0.000	0.0	0.0	0.0
	RC ENV~1	Max	0.000	0.000	-0.002	0.0	0.0	0.0
		Min	-0.000	-0.000	-0.004	-0.0	-0.0	0.0
	RC ENV~2	Max	0.000	-0.000	-0.003	-0.0	0.0	0.0
		Min	-0.000	-0.000	-0.003	-0.0	0.0	0.0
195	SX (RS)		0.000	0.000	0.000	0.0	0.0	0.0
	SY (RS)		0.000	0.000	0.000	0.0	0.0	0.0
	RC ENV~1	Max	0.000	0.000	-0.002	0.0	0.0	0.0
		Min	-0.000	-0.000	-0.004	-0.0	-0.0	0.0
	RC ENV~2	Max	0.000	0.000	-0.003	-0.0	0.0	0.0
		Min	-0.000	-0.000	-0.003	-0.0	0.0	0.0
196	SX (RS)		0.000	0.000	0.000	0.0	0.0	0.0
	SY (RS)		0.000	0.000	0.000	0.0	0.0	0.0
	RC ENV~1	Max	0.000	0.000	-0.003	0.0	0.0	0.0
		Min	-0.000	-0.000	-0.004	-0.0	-0.0	0.0
	RC ENV~2	Max	0.000	-0.000	-0.003	-0.0	0.0	0.0
		Min	-0.000	-0.000	-0.003	-0.0	0.0	0.0
197	SX (RS)		0.000	0.000	0.000	0.0	0.0	0.0
	SY (RS)		0.000	0.000	0.000	0.0	0.0	0.0
	RC ENV~1	Max	0.000	0.000	-0.002	0.0	0.0	0.0
		Min	-0.000	-0.000	-0.004	-0.0	-0.0	0.0
	RC ENV~2	Max	0.000	-0.000	-0.003	-0.0	0.0	0.0
		Min	-0.000	-0.000	-0.003	-0.0	0.0	0.0
198	SX (RS)		0.000	0.000	0.000	0.0	0.0	0.0
	SY (RS)		0.000	0.000	0.000	0.0	0.0	0.0
	RC ENV~1	Max	0.000	0.000	-0.002	0.0	0.0	0.0
		Min	-0.000	-0.000	-0.004	-0.0	-0.0	0.0
	RC ENV~2	Max	0.000	0.000	-0.003	-0.0	0.0	0.0
		Min	-0.000	-0.000	-0.003	-0.0	0.0	0.0
199	SX (RS)		0.000	0.000	0.000	0.0	0.0	0.0
	SY (RS)		0.000	0.000	0.000	0.0	0.0	0.0
	RC ENV~1	Max	0.000	0.000	-0.003	-0.0	0.0	0.0
		Min	-0.000	-0.000	-0.004	-0.0	-0.0	0.0
	RC ENV~2	Max	0.000	-0.000	-0.003	-0.0	0.0	0.0
		Min	-0.000	-0.000	-0.003	-0.0	0.0	0.0
200	SX (RS)		0.000	0.000	0.000	0.0	0.0	0.0
	SY (RS)		0.000	0.000	0.000	0.0	0.0	0.0
	RC ENV~1	Max	0.000	0.000	-0.003	-0.0	0.0	0.0
		Min	-0.000	-0.000	-0.004	-0.0	-0.0	0.0
	RC ENV~2	Max	0.000	-0.000	-0.003	-0.0	0.0	0.0
		Min	-0.000	-0.000	-0.003	-0.0	0.0	0.0
201	SX (RS)		0.000	0.000	0.000	0.0	0.0	0.0
	SY (RS)		0.000	0.000	0.000	0.0	0.0	0.0
	RC ENV~1	Max	0.000	0.000	-0.003	-0.0	0.0	0.0
		Min	-0.000	-0.000	-0.004	-0.0	-0.0	0.0
	RC ENV~2	Max	0.000	0.000	-0.003	-0.0	0.0	0.0
		Min	-0.000	-0.000	-0.003	-0.0	0.0	0.0
202	SX (RS)		0.000	0.000	0.000	0.0	0.0	0.0

	SY (RS)	0.000	0.000	0.000	0.0	0.0	0.0
RC ENV~1	Max	0.000	0.000	-0.003	-0.0	0.0	0.0
	Min	-0.000	-0.000	-0.004	-0.0	-0.0	0.0
RC ENV~2	Max	0.000	-0.000	-0.003	-0.0	0.0	0.0
	Min	-0.000	-0.000	-0.003	-0.0	0.0	0.0
203	SX (RS)	0.000	0.000	0.000	0.0	0.0	0.0
	SY (RS)	0.000	0.000	0.000	0.0	0.0	0.0
RC ENV~1	Max	0.000	0.000	-0.003	-0.0	0.0	0.0
	Min	-0.000	-0.000	-0.004	-0.0	-0.0	0.0
RC ENV~2	Max	0.000	-0.000	-0.003	-0.0	0.0	0.0
	Min	-0.000	-0.000	-0.003	-0.0	0.0	0.0
204	SX (RS)	0.000	0.000	0.000	0.0	0.0	0.0
	SY (RS)	0.000	0.000	0.000	0.0	0.0	0.0
RC ENV~1	Max	0.000	0.000	-0.003	-0.0	0.0	0.0
	Min	-0.000	-0.000	-0.004	-0.0	-0.0	0.0
RC ENV~2	Max	0.000	0.000	-0.003	-0.0	0.0	0.0
	Min	-0.000	-0.000	-0.003	-0.0	0.0	0.0
205	SX (RS)	0.000	0.000	0.000	0.0	0.0	0.0
	SY (RS)	0.000	0.000	0.000	0.0	0.0	0.0
RC ENV~1	Max	0.000	0.000	-0.003	-0.0	0.0	0.0
	Min	-0.000	-0.000	-0.004	-0.0	-0.0	0.0
RC ENV~2	Max	0.000	-0.000	-0.003	-0.0	0.0	0.0
	Min	-0.000	-0.000	-0.003	-0.0	0.0	0.0
206	SX (RS)	0.000	0.000	0.000	0.0	0.0	0.0
	SY (RS)	0.000	0.000	0.000	0.0	0.0	0.0
RC ENV~1	Max	0.000	0.000	-0.003	-0.0	0.0	0.0
	Min	-0.000	-0.000	-0.004	-0.0	-0.0	0.0
RC ENV~2	Max	0.000	0.000	-0.003	-0.0	0.0	0.0
	Min	-0.000	-0.000	-0.003	-0.0	0.0	0.0
207	SX (RS)	0.000	0.000	0.000	0.0	0.0	0.0
	SY (RS)	0.000	0.000	0.000	0.0	0.0	0.0
RC ENV~1	Max	0.000	0.000	-0.003	-0.0	0.0	0.0
	Min	-0.000	-0.000	-0.004	-0.0	-0.0	0.0
RC ENV~2	Max	0.000	0.000	-0.003	-0.0	0.0	0.0
	Min	-0.000	-0.000	-0.003	-0.0	0.0	0.0
208	SX (RS)	0.000	0.000	0.000	0.0	0.0	0.0
	SY (RS)	0.000	0.000	0.000	0.0	0.0	0.0
RC ENV~1	Max	0.000	0.000	-0.003	-0.0	0.0	0.0
	Min	-0.000	-0.000	-0.004	-0.0	-0.0	0.0
RC ENV~2	Max	0.000	-0.000	-0.003	-0.0	0.0	0.0
	Min	-0.000	-0.000	-0.003	-0.0	0.0	0.0
209	SX (RS)	0.000	0.000	0.000	0.0	0.0	0.0
	SY (RS)	0.000	0.000	0.000	0.0	0.0	0.0
RC ENV~1	Max	0.000	0.000	-0.003	-0.0	0.0	0.0
	Min	-0.000	-0.000	-0.004	-0.0	-0.0	0.0
RC ENV~2	Max	0.000	0.000	-0.003	-0.0	0.0	0.0
	Min	-0.000	-0.000	-0.003	-0.0	0.0	0.0
210	SX (RS)	0.000	0.000	0.000	0.0	0.0	0.0
	SY (RS)	0.000	0.000	0.000	0.0	0.0	0.0
RC ENV~1	Max	0.000	0.000	-0.003	-0.0	0.0	0.0
	Min	-0.000	-0.000	-0.004	-0.0	-0.0	0.0
RC ENV~2	Max	0.000	0.000	-0.003	-0.0	0.0	0.0
	Min	-0.000	-0.000	-0.003	-0.0	0.0	0.0

211	SX (RS)	0.000	0.000	0.000	0.0	0.0	0.0
	SY (RS)	0.000	0.000	0.000	0.0	0.0	0.0
RC ENV~1	Max	0.000	0.000	-0.003	-0.0	0.0	0.0
	Min	-0.000	-0.000	-0.004	-0.0	-0.0	0.0
RC ENV~2	Max	0.000	0.000	-0.003	-0.0	0.0	0.0
	Min	-0.000	-0.000	-0.003	-0.0	-0.0	0.0
212	SX (RS)	0.000	0.000	0.000	0.0	0.0	0.0
	SY (RS)	0.000	0.000	0.000	0.0	0.0	0.0
RC ENV~1	Max	0.000	0.000	-0.003	0.0	0.0	0.0
	Min	-0.000	-0.000	-0.004	-0.0	-0.0	0.0
RC ENV~2	Max	0.000	-0.000	-0.003	0.0	0.0	0.0
	Min	-0.000	-0.000	-0.003	-0.0	0.0	0.0
213	SX (RS)	0.000	0.000	0.000	0.0	0.0	0.0
	SY (RS)	0.000	0.000	0.000	0.0	0.0	0.0
RC ENV~1	Max	0.000	0.000	-0.003	0.0	0.0	0.0
	Min	-0.000	-0.000	-0.004	-0.0	-0.0	0.0
RC ENV~2	Max	0.000	0.000	-0.003	-0.0	0.0	0.0
	Min	-0.000	-0.000	-0.003	-0.0	-0.0	0.0
214	SX (RS)	0.000	0.000	0.000	0.0	0.0	0.0
	SY (RS)	0.000	0.000	0.000	0.0	0.0	0.0
RC ENV~1	Max	0.000	0.000	-0.003	0.0	0.0	0.0
	Min	-0.000	-0.000	-0.004	-0.0	-0.0	0.0
RC ENV~2	Max	0.000	0.000	-0.003	-0.0	0.0	0.0
	Min	-0.000	-0.000	-0.003	-0.0	-0.0	0.0
215	SX (RS)	0.000	0.000	0.000	0.0	0.0	0.0
	SY (RS)	0.000	0.000	0.000	0.0	0.0	0.0
RC ENV~1	Max	0.000	0.000	-0.003	0.0	0.0	0.0
	Min	-0.000	-0.000	-0.004	-0.0	-0.0	0.0
RC ENV~2	Max	0.000	-0.000	-0.003	0.0	0.0	0.0
	Min	-0.000	-0.000	-0.003	-0.0	0.0	0.0
216	SX (RS)	0.000	0.000	0.000	0.0	0.0	0.0
	SY (RS)	0.000	0.000	0.000	0.0	0.0	0.0
RC ENV~1	Max	0.000	0.000	-0.003	0.0	0.0	0.0
	Min	-0.000	-0.000	-0.004	-0.0	-0.0	0.0
RC ENV~2	Max	0.000	-0.000	-0.003	0.0	0.0	0.0
	Min	-0.000	-0.000	-0.003	-0.0	0.0	0.0
217	SX (RS)	0.000	0.000	0.000	0.0	0.0	0.0
	SY (RS)	0.000	0.000	0.000	0.0	0.0	0.0
RC ENV~1	Max	0.000	0.000	-0.003	0.0	0.0	0.0
	Min	-0.000	-0.000	-0.004	-0.0	-0.0	0.0
RC ENV~2	Max	0.000	0.000	-0.003	-0.0	0.0	0.0
	Min	-0.000	-0.000	-0.003	-0.0	-0.0	0.0
218	SX (RS)	0.000	0.000	0.000	0.0	0.0	0.0
	SY (RS)	0.000	0.000	0.000	0.0	0.0	0.0
RC ENV~1	Max	0.000	0.000	-0.003	0.0	0.0	0.0
	Min	-0.000	-0.000	-0.004	-0.0	-0.0	0.0
RC ENV~2	Max	0.000	-0.000	-0.003	0.0	0.0	0.0
	Min	-0.000	-0.000	-0.003	-0.0	0.0	0.0
219	SX (RS)	0.000	0.000	0.000	0.0	0.0	0.0
	SY (RS)	0.000	0.000	0.000	0.0	0.0	0.0
RC ENV~1	Max	0.000	0.000	-0.003	0.0	0.0	0.0
	Min	-0.000	-0.000	-0.004	-0.0	-0.0	0.0

	RC ENV~2	Max	0.000	-0.000	-0.003	-0.0	0.0	0.0
		Min	-0.000	-0.000	-0.003	-0.0	0.0	0.0
220	SX (RS)		0.000	0.000	0.000	0.0	0.0	0.0
	SY (RS)		0.000	0.000	0.000	0.0	0.0	0.0
	RC ENV~1	Max	0.000	0.000	-0.003	0.0	0.0	0.0
		Min	-0.000	-0.000	-0.004	-0.0	-0.0	0.0
	RC ENV~2	Max	0.000	-0.000	-0.003	-0.0	0.0	0.0
		Min	-0.000	-0.000	-0.003	-0.0	0.0	0.0
221	SX (RS)		0.000	0.000	0.000	0.0	0.0	0.0
	SY (RS)		0.000	0.000	0.000	0.0	0.0	0.0
	RC ENV~1	Max	0.000	0.000	-0.003	0.0	0.0	0.0
		Min	-0.000	-0.000	-0.004	-0.0	-0.0	0.0
	RC ENV~2	Max	0.000	0.000	-0.003	-0.0	0.0	0.0
		Min	-0.000	-0.000	-0.003	-0.0	0.0	0.0
222	SX (RS)		0.000	0.000	0.000	0.0	0.0	0.0
	SY (RS)		0.000	0.000	0.000	0.0	0.0	0.0
	RC ENV~1	Max	0.000	0.000	-0.003	0.0	0.0	0.0
		Min	-0.000	-0.000	-0.004	-0.0	-0.0	0.0
	RC ENV~2	Max	0.000	0.000	-0.003	-0.0	0.0	0.0
		Min	-0.000	-0.000	-0.003	-0.0	0.0	0.0
223	SX (RS)		0.000	0.000	0.000	0.0	0.0	0.0
	SY (RS)		0.000	0.000	0.000	0.0	0.0	0.0
	RC ENV~1	Max	0.000	0.000	-0.003	0.0	0.0	0.0
		Min	-0.000	-0.000	-0.004	-0.0	-0.0	0.0
	RC ENV~2	Max	0.000	0.000	-0.003	-0.0	0.0	0.0
		Min	-0.000	-0.000	-0.003	-0.0	0.0	0.0
224	SX (RS)		0.000	0.000	0.000	0.0	0.0	0.0
	SY (RS)		0.000	0.000	0.000	0.0	0.0	0.0
	RC ENV~1	Max	0.000	0.000	-0.003	-0.0	0.0	0.0
		Min	-0.000	-0.000	-0.005	-0.0	-0.0	0.0
	RC ENV~2	Max	0.000	0.000	-0.003	-0.0	0.0	0.0
		Min	-0.000	-0.000	-0.003	-0.0	0.0	0.0
225	SX (RS)		0.000	0.000	0.000	0.0	0.0	0.0
	SY (RS)		0.000	0.000	0.000	0.0	0.0	0.0
	RC ENV~1	Max	0.000	0.000	-0.003	0.0	0.0	0.0
		Min	-0.000	-0.000	-0.005	-0.0	-0.0	0.0
	RC ENV~2	Max	0.000	0.000	-0.003	-0.0	0.0	0.0
		Min	-0.000	-0.000	-0.003	-0.0	0.0	0.0
226	SX (RS)		0.000	0.000	0.000	0.0	0.0	0.0
	SY (RS)		0.000	0.000	0.000	0.0	0.0	0.0
	RC ENV~1	Max	0.000	0.000	-0.003	0.0	0.0	0.0
		Min	-0.000	-0.000	-0.005	-0.0	-0.0	0.0
	RC ENV~2	Max	0.000	0.000	-0.003	-0.0	0.0	0.0
		Min	-0.000	-0.000	-0.003	-0.0	-0.0	0.0
227	SX (RS)		0.000	0.000	0.000	0.0	0.0	0.0
	SY (RS)		0.000	0.000	0.000	0.0	0.0	0.0
	RC ENV~1	Max	0.000	0.000	-0.003	0.0	0.0	0.0
		Min	-0.000	-0.000	-0.005	-0.0	-0.0	0.0
	RC ENV~2	Max	0.000	0.000	-0.003	-0.0	0.0	0.0
		Min	-0.000	-0.000	-0.003	-0.0	0.0	0.0
228	SX (RS)		0.000	0.000	0.000	0.0	0.0	0.0
	SY (RS)		0.000	0.000	0.000	0.0	0.0	0.0
	RC ENV~1	Max	0.000	0.000	-0.003	0.0	0.0	0.0

		Min	-0.000	-0.000	-0.005	-0.0	-0.0	0.0
	RC ENV~2	Max	0.000	0.000	-0.003	-0.0	0.0	0.0
		Min	-0.000	-0.000	-0.003	-0.0	-0.0	0.0
229	SX (RS)		0.000	0.000	0.000	0.0	0.0	0.0
	SY (RS)		0.000	0.000	0.000	0.0	0.0	0.0
	RC ENV~1	Max	0.000	0.000	-0.003	0.0	0.0	0.0
		Min	-0.000	-0.000	-0.005	-0.0	-0.0	0.0
	RC ENV~2	Max	0.000	0.000	-0.003	0.0	0.0	0.0
		Min	-0.000	-0.000	-0.003	-0.0	-0.0	0.0
230	SX (RS)		0.000	0.000	0.000	0.0	0.0	0.0
	SY (RS)		0.000	0.000	0.000	0.0	0.0	0.0
	RC ENV~1	Max	0.000	0.000	-0.003	0.0	0.0	0.0
		Min	-0.000	-0.000	-0.005	-0.0	-0.0	0.0
	RC ENV~2	Max	0.000	0.000	-0.003	0.0	0.0	0.0
		Min	-0.000	-0.000	-0.003	-0.0	-0.0	0.0
231	SX (RS)		0.000	0.000	0.000	0.0	0.0	0.0
	SY (RS)		0.000	0.000	0.000	0.0	0.0	0.0
	RC ENV~1	Max	0.000	0.000	-0.003	0.0	0.0	0.0
		Min	-0.000	-0.000	-0.005	-0.0	-0.0	0.0
	RC ENV~2	Max	0.000	0.000	-0.003	0.0	0.0	0.0
		Min	-0.000	0.000	-0.003	-0.0	0.0	0.0
232	SX (RS)		0.000	0.000	0.000	0.0	0.0	0.0
	SY (RS)		0.000	0.000	0.000	0.0	0.0	0.0
	RC ENV~1	Max	0.000	0.000	-0.003	0.0	0.0	0.0
		Min	-0.000	-0.000	-0.005	-0.0	-0.0	0.0
	RC ENV~2	Max	0.000	0.000	-0.003	0.0	0.0	0.0
		Min	-0.000	-0.000	-0.003	-0.0	-0.0	0.0
233	SX (RS)		0.000	0.000	0.000	0.0	0.0	0.0
	SY (RS)		0.000	0.000	0.000	0.0	0.0	0.0
	RC ENV~1	Max	0.000	0.000	-0.003	0.0	0.0	0.0
		Min	-0.000	-0.000	-0.005	-0.0	-0.0	0.0
	RC ENV~2	Max	0.000	0.000	-0.003	0.0	0.0	0.0
		Min	-0.000	-0.000	-0.003	-0.0	-0.0	0.0
234	SX (RS)		0.000	0.000	0.000	0.0	0.0	0.0
	SY (RS)		0.000	0.000	0.000	0.0	0.0	0.0
	RC ENV~1	Max	0.000	0.000	-0.003	0.0	0.0	0.0
		Min	-0.000	-0.000	-0.005	-0.0	-0.0	0.0
	RC ENV~2	Max	0.000	0.000	-0.003	0.0	0.0	0.0
		Min	-0.000	0.000	-0.003	-0.0	0.0	0.0
235	SX (RS)		0.000	0.000	0.000	0.0	0.0	0.0
	SY (RS)		0.000	0.000	0.000	0.0	0.0	0.0
	RC ENV~1	Max	0.000	0.000	-0.003	0.0	0.0	0.0
		Min	-0.000	-0.000	-0.005	-0.0	-0.0	0.0
	RC ENV~2	Max	0.000	0.000	-0.003	0.0	0.0	0.0
		Min	-0.000	-0.000	-0.003	-0.0	-0.0	0.0
236	SX (RS)		0.000	0.000	0.000	0.0	0.0	0.0
	SY (RS)		0.000	0.000	0.000	0.0	0.0	0.0
	RC ENV~1	Max	0.000	0.000	-0.003	0.0	0.0	0.0
		Min	-0.000	-0.000	-0.005	-0.0	-0.0	0.0
	RC ENV~2	Max	0.000	0.000	-0.003	0.0	0.0	0.0
		Min	-0.000	-0.000	-0.003	-0.0	-0.0	0.0
237	SX (RS)		0.000	0.000	0.000	0.0	0.0	0.0
	SY (RS)		0.000	0.000	0.000	0.0	0.0	0.0

	RC ENV~1	Max	0.000	0.000	-0.003	0.0	0.0	0.0
		Min	-0.000	-0.000	-0.005	-0.0	-0.0	0.0
	RC ENV~2	Max	0.000	0.000	-0.003	0.0	0.0	0.0
		Min	-0.000	0.000	-0.003	-0.0	0.0	0.0
238	SX (RS)		0.000	0.000	0.000	0.0	0.0	0.0
	SY (RS)		0.000	0.000	0.000	0.0	0.0	0.0
	RC ENV~1	Max	0.000	0.000	-0.003	0.0	0.0	0.0
		Min	-0.000	-0.000	-0.005	-0.0	-0.0	0.0
	RC ENV~2	Max	0.000	0.000	-0.003	0.0	0.0	0.0
		Min	-0.000	-0.000	-0.003	-0.0	-0.0	0.0
239	SX (RS)		0.000	0.000	0.000	0.0	0.0	0.0
	SY (RS)		0.000	0.000	0.000	0.0	0.0	0.0
	RC ENV~1	Max	0.000	0.000	-0.003	0.0	0.0	0.0
		Min	-0.000	-0.000	-0.005	-0.0	-0.0	0.0
	RC ENV~2	Max	0.000	0.000	-0.003	0.0	0.0	0.0
		Min	-0.000	-0.000	-0.004	-0.0	-0.0	0.0
240	SX (RS)		0.000	0.000	0.000	0.0	0.0	0.0
	SY (RS)		0.000	0.000	0.000	0.0	0.0	0.0
	RC ENV~1	Max	0.000	0.000	-0.003	0.0	0.0	0.0
		Min	-0.000	-0.000	-0.005	-0.0	-0.0	0.0
	RC ENV~2	Max	0.000	0.000	-0.003	0.0	0.0	0.0
		Min	-0.000	0.000	-0.004	-0.0	0.0	0.0
241	SX (RS)		0.000	0.000	0.000	0.0	0.0	0.0
	SY (RS)		0.000	0.000	0.000	0.0	0.0	0.0
	RC ENV~1	Max	0.000	0.000	-0.003	0.0	0.0	0.0
		Min	-0.000	-0.000	-0.005	-0.0	-0.0	0.0
	RC ENV~2	Max	0.000	0.000	-0.003	0.0	0.0	0.0
		Min	-0.000	-0.000	-0.004	-0.0	-0.0	0.0
242	SX (RS)		0.000	0.000	0.000	0.0	0.0	0.0
	SY (RS)		0.000	0.000	0.000	0.0	0.0	0.0
	RC ENV~1	Max	0.000	0.000	-0.003	0.0	0.0	0.0
		Min	-0.000	-0.000	-0.005	-0.0	-0.0	0.0
	RC ENV~2	Max	0.000	0.000	-0.003	0.0	0.0	0.0
		Min	-0.000	-0.000	-0.004	-0.0	-0.0	0.0
243	SX (RS)		0.000	0.000	0.000	0.0	0.0	0.0
	SY (RS)		0.000	0.000	0.000	0.0	0.0	0.0
	RC ENV~1	Max	0.000	0.000	-0.003	0.0	0.0	0.0
		Min	-0.000	-0.000	-0.005	-0.0	-0.0	0.0
	RC ENV~2	Max	0.000	0.000	-0.003	0.0	0.0	0.0
		Min	-0.000	0.000	-0.004	-0.0	0.0	0.0
244	SX (RS)		0.000	0.000	0.000	0.0	0.0	0.0
	SY (RS)		0.000	0.000	0.000	0.0	0.0	0.0
	RC ENV~1	Max	0.000	0.000	-0.003	0.0	0.0	0.0
		Min	-0.000	-0.000	-0.005	-0.0	-0.0	0.0
	RC ENV~2	Max	0.000	0.000	-0.003	0.0	0.0	0.0
		Min	-0.000	0.000	-0.004	-0.0	-0.0	0.0
245	SX (RS)		0.000	0.000	0.000	0.0	0.0	0.0
	SY (RS)		0.000	0.000	0.000	0.0	0.0	0.0
	RC ENV~1	Max	0.000	0.000	-0.003	0.0	0.0	0.0
		Min	-0.000	-0.000	-0.005	-0.0	-0.0	0.0
	RC ENV~2	Max	0.000	0.000	-0.003	0.0	0.0	0.0
		Min	-0.000	-0.000	-0.004	-0.0	-0.0	0.0

246	SX (RS)	0.000	0.000	0.000	0.0	0.0	0.0
	SY (RS)	0.000	0.000	0.000	0.0	0.0	0.0
RC ENV~1	Max	0.000	0.000	-0.003	0.0	0.0	0.0
	Min	-0.000	-0.000	-0.005	-0.0	-0.0	0.0
RC ENV~2	Max	0.000	0.000	-0.003	0.0	0.0	0.0
	Min	-0.000	0.000	-0.004	-0.0	0.0	0.0
247	SX (RS)	0.000	0.000	0.000	0.0	0.0	0.0
	SY (RS)	0.000	0.000	0.000	0.0	0.0	0.0
RC ENV~1	Max	0.000	0.000	-0.003	0.0	0.0	0.0
	Min	-0.000	-0.000	-0.005	-0.0	-0.0	0.0
RC ENV~2	Max	0.000	0.000	-0.003	0.0	0.0	0.0
	Min	-0.000	0.000	-0.004	-0.0	-0.0	0.0
248	SX (RS)	0.000	0.000	0.000	0.0	0.0	0.0
	SY (RS)	0.000	0.000	0.000	0.0	0.0	0.0
RC ENV~1	Max	0.000	0.000	-0.003	0.0	0.0	0.0
	Min	-0.000	-0.000	-0.005	-0.0	-0.0	0.0
RC ENV~2	Max	0.000	0.000	-0.003	0.0	0.0	0.0
	Min	-0.000	-0.000	-0.004	-0.0	-0.0	0.0
249	SX (RS)	0.003	0.000	0.000	0.0	0.0	0.0
	SY (RS)	0.000	0.002	0.000	0.0	0.0	0.0
RC ENV~1	Max	0.003	0.002	-0.002	0.0	0.0	0.0
	Min	-0.003	-0.002	-0.004	-0.0	-0.0	-0.0
RC ENV~2	Max	0.001	-0.000	-0.003	-0.0	0.0	-0.0
	Min	-0.001	-0.000	-0.003	-0.0	-0.0	-0.0
250	SX (RS)	0.003	0.000	0.000	0.0	0.0	0.0
	SY (RS)	0.000	0.002	0.000	0.0	0.0	0.0
RC ENV~1	Max	0.003	0.002	-0.002	0.0	0.0	0.0
	Min	-0.003	-0.002	-0.004	-0.0	-0.0	-0.0
RC ENV~2	Max	0.001	0.000	-0.003	-0.0	0.0	0.0
	Min	-0.001	0.000	-0.003	-0.0	-0.0	0.0
251	SX (RS)	0.004	0.000	0.000	0.0	0.0	0.0
	SY (RS)	0.001	0.002	0.000	0.0	0.0	0.0
RC ENV~1	Max	0.005	0.002	-0.003	0.0	0.0	0.0
	Min	-0.003	-0.002	-0.004	-0.0	-0.0	-0.0
RC ENV~2	Max	0.004	-0.000	-0.003	0.0	0.0	-0.0
	Min	0.000	-0.000	-0.003	0.0	0.0	-0.0
252	SX (RS)	0.004	0.000	0.000	0.0	0.0	0.0
	SY (RS)	0.001	0.002	0.000	0.0	0.0	0.0
RC ENV~1	Max	0.003	0.002	-0.003	0.0	0.0	0.0
	Min	-0.005	-0.002	-0.004	-0.0	-0.0	-0.0
RC ENV~2	Max	-0.000	0.000	-0.003	0.0	-0.0	0.0
	Min	-0.003	0.000	-0.003	-0.0	-0.0	0.0
253	SX (RS)	0.004	0.000	0.000	0.0	0.0	0.0
	SY (RS)	0.001	0.002	0.000	0.0	0.0	0.0
RC ENV~1	Max	0.005	0.002	-0.002	0.0	0.0	0.0
	Min	-0.002	-0.002	-0.004	-0.0	-0.0	-0.0
RC ENV~2	Max	0.004	-0.000	-0.003	-0.0	0.0	0.0
	Min	0.000	-0.000	-0.003	-0.0	0.0	0.0
254	SX (RS)	0.004	0.000	0.000	0.0	0.0	0.0
	SY (RS)	0.001	0.002	0.000	0.0	0.0	0.0
RC ENV~1	Max	0.003	0.002	-0.003	0.0	0.0	0.0
	Min	-0.005	-0.002	-0.005	-0.0	-0.0	-0.0
RC ENV~2	Max	-0.000	0.000	-0.003	-0.0	-0.0	-0.0

	Min	-0.003	0.000	-0.003	-0.0	-0.0	-0.0
255	SX (RS)	0.003	0.000	0.000	0.0	0.0	0.0
	SY (RS)	0.000	0.002	0.000	0.0	0.0	0.0
RC ENV~1	Max	0.003	0.002	-0.002	0.0	0.0	0.0
	Min	-0.002	-0.002	-0.004	-0.0	-0.0	-0.0
RC ENV~2	Max	0.001	-0.000	-0.002	0.0	0.0	0.0
	Min	-0.001	-0.000	-0.003	0.0	-0.0	0.0
256	SX (RS)	0.003	0.000	0.000	0.0	0.0	0.0
	SY (RS)	0.000	0.002	0.000	0.0	0.0	0.0
RC ENV~1	Max	0.003	0.002	-0.003	0.0	0.0	0.0
	Min	-0.003	-0.002	-0.005	-0.0	-0.0	-0.0
RC ENV~2	Max	0.001	0.000	-0.003	0.0	0.0	-0.0
	Min	-0.001	0.000	-0.004	0.0	-0.0	-0.0
257	SX (RS)	0.003	0.000	0.000	0.0	0.0	0.0
	SY (RS)	0.000	0.007	0.000	0.0	0.0	0.0
RC ENV~1	Max	0.003	0.007	-0.002	0.0	0.0	0.0
	Min	-0.003	-0.007	-0.004	-0.0	-0.0	-0.0
RC ENV~2	Max	0.001	0.000	-0.003	-0.0	0.0	0.0
	Min	-0.001	-0.000	-0.003	-0.0	-0.0	-0.0
258	SX (RS)	0.010	0.000	0.000	0.0	0.0	0.0
	SY (RS)	0.000	0.007	0.000	0.0	0.0	0.0
RC ENV~1	Max	0.010	0.007	-0.003	0.0	0.0	0.0
	Min	-0.010	-0.007	-0.004	-0.0	-0.0	-0.0
RC ENV~2	Max	0.002	0.000	-0.003	0.0	0.0	0.0
	Min	-0.002	-0.000	-0.003	0.0	-0.0	-0.0
259	SX (RS)	0.010	0.000	0.000	0.0	0.0	0.0
	SY (RS)	0.000	0.007	0.000	0.0	0.0	0.0
RC ENV~1	Max	0.010	0.007	-0.003	0.0	0.0	0.0
	Min	-0.010	-0.007	-0.004	-0.0	-0.0	-0.0
RC ENV~2	Max	0.002	0.000	-0.003	-0.0	0.0	0.0
	Min	-0.002	-0.000	-0.003	-0.0	-0.0	-0.0
260	SX (RS)	0.003	0.000	0.000	0.0	0.0	0.0
	SY (RS)	0.000	0.007	0.000	0.0	0.0	0.0
RC ENV~1	Max	0.003	0.007	-0.002	0.0	0.0	0.0
	Min	-0.003	-0.007	-0.004	-0.0	-0.0	-0.0
RC ENV~2	Max	0.001	0.000	-0.002	0.0	0.0	0.0
	Min	-0.001	-0.000	-0.003	0.0	-0.0	-0.0
261	SX (RS)	0.002	0.000	0.000	0.0	0.0	0.0
	SY (RS)	0.000	0.001	0.000	0.0	0.0	0.0
RC ENV~1	Max	0.002	0.001	-0.002	0.0	0.0	0.0
	Min	-0.002	-0.001	-0.004	-0.0	-0.0	-0.0
RC ENV~2	Max	0.001	0.000	-0.002	0.0	0.0	0.0
	Min	-0.001	0.000	-0.003	0.0	-0.0	0.0
262	SX (RS)	0.002	0.000	0.000	0.0	0.0	0.0
	SY (RS)	0.000	0.001	0.000	0.0	0.0	0.0
RC ENV~1	Max	0.002	0.001	-0.002	0.0	0.0	0.0
	Min	-0.002	-0.001	-0.004	-0.0	-0.0	-0.0
RC ENV~2	Max	0.000	0.000	-0.002	0.0	0.0	0.0
	Min	-0.000	0.000	-0.003	0.0	-0.0	0.0
263	SX (RS)	0.001	0.000	0.000	0.0	0.0	0.0
	SY (RS)	0.000	0.001	0.000	0.0	0.0	0.0
RC ENV~1	Max	0.001	0.001	-0.002	0.0	0.0	0.0
	Min	-0.001	-0.001	-0.004	-0.0	-0.0	-0.0

	RC ENV~2	Max	0.000	0.000	-0.002	-0.0	0.0	0.0
		Min	-0.000	0.000	-0.003	-0.0	-0.0	0.0
264	SX (RS)		0.001	0.000	0.000	0.0	0.0	0.0
	SY (RS)		0.000	0.000	0.000	0.0	0.0	0.0
	RC ENV~1	Max	0.001	0.000	-0.002	0.0	0.0	0.0
		Min	-0.001	-0.000	-0.004	-0.0	-0.0	-0.0
	RC ENV~2	Max	0.000	0.000	-0.002	-0.0	0.0	0.0
		Min	-0.000	0.000	-0.003	-0.0	-0.0	0.0
265	SX (RS)		0.000	0.000	0.000	0.0	0.0	0.0
	SY (RS)		0.000	0.000	0.000	0.0	0.0	0.0
	RC ENV~1	Max	0.000	0.000	-0.002	0.0	0.0	0.0
		Min	-0.000	-0.000	-0.004	-0.0	-0.0	-0.0
	RC ENV~2	Max	0.000	0.000	-0.002	-0.0	0.0	0.0
		Min	-0.000	0.000	-0.003	-0.0	-0.0	0.0
266	SX (RS)		0.003	0.000	0.000	0.0	0.0	0.0
	SY (RS)		0.001	0.002	0.000	0.0	0.0	0.0
	RC ENV~1	Max	0.004	0.001	-0.002	0.0	0.0	0.0
		Min	-0.002	-0.002	-0.004	-0.0	-0.0	-0.0
	RC ENV~2	Max	0.003	-0.000	-0.003	-0.0	0.0	0.0
		Min	0.000	-0.000	-0.003	-0.0	0.0	0.0
267	SX (RS)		0.002	0.000	0.000	0.0	0.0	0.0
	SY (RS)		0.000	0.001	0.000	0.0	0.0	0.0
	RC ENV~1	Max	0.003	0.001	-0.002	0.0	0.0	0.0
		Min	-0.001	-0.001	-0.004	-0.0	-0.0	-0.0
	RC ENV~2	Max	0.002	-0.000	-0.003	-0.0	0.0	0.0
		Min	0.000	-0.000	-0.003	-0.0	0.0	0.0
268	SX (RS)		0.001	0.000	0.000	0.0	0.0	0.0
	SY (RS)		0.000	0.001	0.000	0.0	0.0	0.0
	RC ENV~1	Max	0.002	0.001	-0.002	0.0	0.0	0.0
		Min	-0.001	-0.001	-0.004	-0.0	-0.0	-0.0
	RC ENV~2	Max	0.001	-0.000	-0.003	0.0	0.0	0.0
		Min	-0.000	-0.000	-0.003	0.0	0.0	0.0
269	SX (RS)		0.001	0.000	0.000	0.0	0.0	0.0
	SY (RS)		0.000	0.000	0.000	0.0	0.0	0.0
	RC ENV~1	Max	0.001	0.000	-0.002	0.0	0.0	0.0
		Min	-0.000	-0.000	-0.004	-0.0	-0.0	-0.0
	RC ENV~2	Max	0.001	-0.000	-0.003	0.0	0.0	0.0
		Min	-0.000	-0.000	-0.003	0.0	0.0	0.0
270	SX (RS)		0.000	0.000	0.000	0.0	0.0	0.0
	SY (RS)		0.000	0.000	0.000	0.0	0.0	0.0
	RC ENV~1	Max	0.000	0.000	-0.002	0.0	0.0	0.0
		Min	-0.000	-0.000	-0.004	-0.0	-0.0	-0.0
	RC ENV~2	Max	0.000	-0.000	-0.003	0.0	0.0	0.0
		Min	-0.000	-0.000	-0.003	0.0	-0.0	0.0
271	SX (RS)		0.003	0.000	0.000	0.0	0.0	0.0
	SY (RS)		0.001	0.002	0.000	0.0	0.0	0.0
	RC ENV~1	Max	0.004	0.002	-0.003	0.0	0.0	0.0
		Min	-0.002	-0.002	-0.004	-0.0	-0.0	-0.0
	RC ENV~2	Max	0.003	0.000	-0.003	0.0	0.0	-0.0
		Min	0.000	-0.000	-0.003	0.0	0.0	-0.0
272	SX (RS)		0.002	0.000	0.000	0.0	0.0	0.0
	SY (RS)		0.000	0.001	0.000	0.0	0.0	0.0

	RC ENV~1	Max	0.003	0.001	-0.003	0.0	0.0	0.0
		Min	-0.001	-0.001	-0.004	-0.0	-0.0	-0.0
	RC ENV~2	Max	0.002	0.000	-0.003	0.0	0.0	-0.0
		Min	-0.000	-0.000	-0.003	0.0	0.0	-0.0
273	SX (RS)		0.001	0.000	0.000	0.0	0.0	0.0
	SY (RS)		0.000	0.001	0.000	0.0	0.0	0.0
	RC ENV~1	Max	0.002	0.001	-0.003	0.0	0.0	0.0
		Min	-0.001	-0.001	-0.004	-0.0	-0.0	-0.0
	RC ENV~2	Max	0.001	0.000	-0.003	-0.0	0.0	-0.0
		Min	-0.000	-0.000	-0.003	-0.0	0.0	-0.0
274	SX (RS)		0.001	0.000	0.000	0.0	0.0	0.0
	SY (RS)		0.000	0.000	0.000	0.0	0.0	0.0
	RC ENV~1	Max	0.001	0.000	-0.003	0.0	0.0	0.0
		Min	-0.001	-0.000	-0.004	-0.0	-0.0	-0.0
	RC ENV~2	Max	0.001	0.000	-0.003	-0.0	0.0	-0.0
		Min	-0.000	-0.000	-0.003	-0.0	-0.0	-0.0
275	SX (RS)		0.000	0.000	0.000	0.0	0.0	0.0
	SY (RS)		0.000	0.000	0.000	0.0	0.0	0.0
	RC ENV~1	Max	0.000	0.000	-0.003	0.0	0.0	0.0
		Min	-0.000	-0.000	-0.004	-0.0	-0.0	-0.0
	RC ENV~2	Max	0.000	0.000	-0.003	0.0	0.0	-0.0
		Min	-0.000	-0.000	-0.003	-0.0	-0.0	-0.0
276	SX (RS)		0.002	0.000	0.000	0.0	0.0	0.0
	SY (RS)		0.000	0.001	0.000	0.0	0.0	0.0
	RC ENV~1	Max	0.002	0.001	-0.002	0.0	0.0	0.0
		Min	-0.002	-0.002	-0.004	-0.0	-0.0	-0.0
	RC ENV~2	Max	0.001	-0.000	-0.003	-0.0	0.0	-0.0
		Min	-0.001	-0.000	-0.003	-0.0	-0.0	-0.0
277	SX (RS)		0.002	0.000	0.000	0.0	0.0	0.0
	SY (RS)		0.000	0.001	0.000	0.0	0.0	0.0
	RC ENV~1	Max	0.002	0.001	-0.002	0.0	0.0	0.0
		Min	-0.002	-0.001	-0.004	-0.0	-0.0	-0.0
	RC ENV~2	Max	0.000	-0.000	-0.003	0.0	0.0	-0.0
		Min	-0.001	-0.000	-0.003	0.0	-0.0	-0.0
278	SX (RS)		0.001	0.000	0.000	0.0	0.0	0.0
	SY (RS)		0.000	0.001	0.000	0.0	0.0	0.0
	RC ENV~1	Max	0.001	0.001	-0.002	0.0	0.0	0.0
		Min	-0.001	-0.001	-0.004	-0.0	-0.0	-0.0
	RC ENV~2	Max	0.000	-0.000	-0.003	0.0	0.0	-0.0
		Min	-0.000	-0.000	-0.003	0.0	-0.0	-0.0
279	SX (RS)		0.001	0.000	0.000	0.0	0.0	0.0
	SY (RS)		0.000	0.000	0.000	0.0	0.0	0.0
	RC ENV~1	Max	0.001	0.000	-0.002	0.0	0.0	0.0
		Min	-0.001	-0.000	-0.004	-0.0	-0.0	-0.0
	RC ENV~2	Max	0.000	-0.000	-0.003	0.0	0.0	-0.0
		Min	-0.000	-0.000	-0.003	0.0	-0.0	-0.0
280	SX (RS)		0.000	0.000	0.000	0.0	0.0	0.0
	SY (RS)		0.000	0.000	0.000	0.0	0.0	0.0
	RC ENV~1	Max	0.000	0.000	-0.002	0.0	0.0	0.0
		Min	-0.000	-0.000	-0.004	-0.0	-0.0	-0.0
	RC ENV~2	Max	0.000	-0.000	-0.003	0.0	0.0	-0.0
		Min	-0.000	-0.000	-0.003	0.0	-0.0	-0.0
281	SX (RS)		0.002	0.000	0.000	0.0	0.0	0.0

	SY (RS)	0.000	0.001	0.000	0.0	0.0	0.0
	RC ENV~1 Max	0.002	0.002	-0.003	0.0	0.0	0.0
	Min	-0.002	-0.001	-0.005	-0.0	-0.0	-0.0
	RC ENV~2 Max	0.001	0.000	-0.003	0.0	0.0	-0.0
	Min	-0.001	0.000	-0.004	0.0	-0.0	-0.0
282	SX (RS)	0.002	0.000	0.000	0.0	0.0	0.0
	SY (RS)	0.000	0.001	0.000	0.0	0.0	0.0
	RC ENV~1 Max	0.002	0.001	-0.003	0.0	0.0	0.0
	Min	-0.002	-0.001	-0.005	-0.0	-0.0	-0.0
	RC ENV~2 Max	0.001	0.000	-0.003	-0.0	0.0	-0.0
	Min	-0.000	0.000	-0.004	-0.0	-0.0	-0.0
283	SX (RS)	0.001	0.000	0.000	0.0	0.0	0.0
	SY (RS)	0.000	0.001	0.000	0.0	0.0	0.0
	RC ENV~1 Max	0.001	0.001	-0.003	0.0	0.0	0.0
	Min	-0.001	-0.001	-0.005	-0.0	-0.0	-0.0
	RC ENV~2 Max	0.000	0.000	-0.003	-0.0	0.0	-0.0
	Min	-0.000	0.000	-0.004	-0.0	-0.0	-0.0
284	SX (RS)	0.001	0.000	0.000	0.0	0.0	0.0
	SY (RS)	0.000	0.000	0.000	0.0	0.0	0.0
	RC ENV~1 Max	0.001	0.000	-0.003	0.0	0.0	0.0
	Min	-0.001	-0.000	-0.005	-0.0	-0.0	-0.0
	RC ENV~2 Max	0.000	0.000	-0.003	-0.0	0.0	-0.0
	Min	-0.000	0.000	-0.004	-0.0	-0.0	-0.0
285	SX (RS)	0.000	0.000	0.000	0.0	0.0	0.0
	SY (RS)	0.000	0.000	0.000	0.0	0.0	0.0
	RC ENV~1 Max	0.000	0.000	-0.003	0.0	0.0	0.0
	Min	-0.000	-0.000	-0.005	-0.0	-0.0	-0.0
	RC ENV~2 Max	0.000	0.000	-0.003	-0.0	0.0	-0.0
	Min	-0.000	0.000	-0.004	-0.0	-0.0	-0.0
286	SX (RS)	0.003	0.000	0.000	0.0	0.0	0.0
	SY (RS)	0.001	0.002	0.000	0.0	0.0	0.0
	RC ENV~1 Max	0.002	0.002	-0.003	0.0	0.0	0.0
	Min	-0.004	-0.002	-0.005	-0.0	-0.0	-0.0
	RC ENV~2 Max	-0.000	0.000	-0.003	-0.0	-0.0	-0.0
	Min	-0.003	0.000	-0.003	-0.0	-0.0	-0.0
287	SX (RS)	0.002	0.000	0.000	0.0	0.0	0.0
	SY (RS)	0.000	0.001	0.000	0.0	0.0	0.0
	RC ENV~1 Max	0.001	0.001	-0.003	0.0	0.0	0.0
	Min	-0.003	-0.001	-0.005	-0.0	-0.0	-0.0
	RC ENV~2 Max	-0.000	0.000	-0.003	-0.0	-0.0	-0.0
	Min	-0.002	-0.000	-0.003	-0.0	-0.0	-0.0
288	SX (RS)	0.001	0.000	0.000	0.0	0.0	0.0
	SY (RS)	0.000	0.001	0.000	0.0	0.0	0.0
	RC ENV~1 Max	0.001	0.001	-0.003	0.0	0.0	0.0
	Min	-0.002	-0.001	-0.005	-0.0	-0.0	-0.0
	RC ENV~2 Max	-0.000	0.000	-0.003	-0.0	-0.0	-0.0
	Min	-0.001	-0.000	-0.003	-0.0	-0.0	-0.0
289	SX (RS)	0.001	0.000	0.000	0.0	0.0	0.0
	SY (RS)	0.000	0.000	0.000	0.0	0.0	0.0
	RC ENV~1 Max	0.001	0.000	-0.003	0.0	0.0	0.0
	Min	-0.001	-0.000	-0.005	-0.0	-0.0	-0.0
	RC ENV~2 Max	-0.000	0.000	-0.003	0.0	-0.0	-0.0
	Min	-0.001	-0.000	-0.003	-0.0	-0.0	-0.0

290	SX (RS)	0.000	0.000	0.000	0.0	0.0	0.0
	SY (RS)	0.000	0.000	0.000	0.0	0.0	0.0
RC ENV~1	Max	0.000	0.000	-0.003	0.0	0.0	0.0
	Min	-0.000	-0.000	-0.005	-0.0	-0.0	-0.0
RC ENV~2	Max	0.000	0.000	-0.003	0.0	-0.0	-0.0
	Min	-0.000	-0.000	-0.003	-0.0	-0.0	-0.0
291	SX (RS)	0.003	0.000	0.000	0.0	0.0	0.0
	SY (RS)	0.001	0.002	0.000	0.0	0.0	0.0
RC ENV~1	Max	0.002	0.002	-0.003	0.0	0.0	0.0
	Min	-0.004	-0.001	-0.004	-0.0	-0.0	-0.0
RC ENV~2	Max	-0.000	0.000	-0.003	0.0	-0.0	0.0
	Min	-0.003	0.000	-0.003	-0.0	-0.0	0.0
292	SX (RS)	0.002	0.000	0.000	0.0	0.0	0.0
	SY (RS)	0.000	0.001	0.000	0.0	0.0	0.0
RC ENV~1	Max	0.001	0.001	-0.003	0.0	0.0	0.0
	Min	-0.003	-0.001	-0.004	-0.0	-0.0	-0.0
RC ENV~2	Max	-0.000	0.000	-0.003	-0.0	-0.0	0.0
	Min	-0.002	0.000	-0.003	-0.0	-0.0	0.0
293	SX (RS)	0.001	0.000	0.000	0.0	0.0	0.0
	SY (RS)	0.000	0.001	0.000	0.0	0.0	0.0
RC ENV~1	Max	0.001	0.001	-0.003	0.0	0.0	0.0
	Min	-0.002	-0.001	-0.004	-0.0	-0.0	-0.0
RC ENV~2	Max	-0.000	0.000	-0.003	-0.0	-0.0	0.0
	Min	-0.001	0.000	-0.003	-0.0	-0.0	0.0
294	SX (RS)	0.001	0.000	0.000	0.0	0.0	0.0
	SY (RS)	0.000	0.000	0.000	0.0	0.0	0.0
RC ENV~1	Max	0.001	0.000	-0.003	0.0	0.0	0.0
	Min	-0.001	-0.000	-0.004	-0.0	-0.0	-0.0
RC ENV~2	Max	-0.000	0.000	-0.003	-0.0	-0.0	0.0
	Min	-0.001	0.000	-0.003	-0.0	-0.0	0.0
295	SX (RS)	0.000	0.000	0.000	0.0	0.0	0.0
	SY (RS)	0.000	0.000	0.000	0.0	0.0	0.0
RC ENV~1	Max	0.000	0.000	-0.003	0.0	0.0	0.0
	Min	-0.000	-0.000	-0.004	-0.0	-0.0	-0.0
RC ENV~2	Max	0.000	0.000	-0.003	-0.0	-0.0	0.0
	Min	-0.000	0.000	-0.003	-0.0	-0.0	0.0
296	SX (RS)	0.002	0.000	0.000	0.0	0.0	0.0
	SY (RS)	0.000	0.001	0.000	0.0	0.0	0.0
RC ENV~1	Max	0.002	0.001	-0.002	0.0	0.0	0.0
	Min	-0.002	-0.001	-0.004	-0.0	-0.0	-0.0
RC ENV~2	Max	0.001	0.000	-0.003	-0.0	0.0	0.0
	Min	-0.001	-0.000	-0.003	-0.0	-0.0	0.0
297	SX (RS)	0.002	0.000	0.000	0.0	0.0	0.0
	SY (RS)	0.000	0.001	0.000	0.0	0.0	0.0
RC ENV~1	Max	0.002	0.001	-0.002	0.0	0.0	0.0
	Min	-0.002	-0.001	-0.004	-0.0	-0.0	-0.0
RC ENV~2	Max	0.001	0.000	-0.003	-0.0	0.0	0.0
	Min	-0.000	-0.000	-0.003	-0.0	-0.0	0.0
298	SX (RS)	0.001	0.000	0.000	0.0	0.0	0.0
	SY (RS)	0.000	0.001	0.000	0.0	0.0	0.0
RC ENV~1	Max	0.001	0.001	-0.002	0.0	0.0	0.0
	Min	-0.001	-0.001	-0.004	-0.0	-0.0	-0.0

	RC ENV~2	Max	0.000	0.000	-0.003	0.0	0.0	0.0
		Min	-0.000	-0.000	-0.003	-0.0	-0.0	0.0
299	SX (RS)		0.001	0.000	0.000	0.0	0.0	0.0
	SY (RS)		0.000	0.000	0.000	0.0	0.0	0.0
	RC ENV~1	Max	0.001	0.000	-0.002	0.0	0.0	0.0
		Min	-0.001	-0.000	-0.004	-0.0	-0.0	-0.0
	RC ENV~2	Max	0.000	0.000	-0.003	0.0	0.0	0.0
		Min	-0.000	-0.000	-0.003	0.0	-0.0	0.0
300	SX (RS)		0.000	0.000	0.000	0.0	0.0	0.0
	SY (RS)		0.000	0.000	0.000	0.0	0.0	0.0
	RC ENV~1	Max	0.000	0.000	-0.002	0.0	0.0	0.0
		Min	-0.000	-0.000	-0.004	-0.0	-0.0	-0.0
	RC ENV~2	Max	0.000	0.000	-0.003	0.0	0.0	0.0
		Min	-0.000	-0.000	-0.003	-0.0	-0.0	0.0
301	SX (RS)		0.002	0.000	0.000	0.0	0.0	0.0
	SY (RS)		0.000	0.006	0.000	0.0	0.0	0.0
	RC ENV~1	Max	0.003	0.006	-0.002	0.0	0.0	0.0
		Min	-0.002	-0.006	-0.004	-0.0	-0.0	-0.0
	RC ENV~2	Max	0.001	0.000	-0.002	0.0	0.0	0.0
		Min	-0.001	0.000	-0.003	0.0	-0.0	-0.0
302	SX (RS)		0.002	0.000	0.000	0.0	0.0	0.0
	SY (RS)		0.000	0.005	0.000	0.0	0.0	0.0
	RC ENV~1	Max	0.002	0.005	-0.002	0.0	0.0	0.0
		Min	-0.002	-0.005	-0.004	-0.0	-0.0	-0.0
	RC ENV~2	Max	0.001	0.000	-0.002	0.0	0.0	0.0
		Min	-0.000	0.000	-0.003	0.0	-0.0	-0.0
303	SX (RS)		0.002	0.000	0.000	0.0	0.0	0.0
	SY (RS)		0.000	0.004	0.000	0.0	0.0	0.0
	RC ENV~1	Max	0.002	0.005	-0.002	0.0	0.0	0.0
		Min	-0.002	-0.004	-0.004	-0.0	-0.0	-0.0
	RC ENV~2	Max	0.001	0.000	-0.002	0.0	0.0	0.0
		Min	-0.000	0.000	-0.003	-0.0	-0.0	-0.0
304	SX (RS)		0.001	0.000	0.000	0.0	0.0	0.0
	SY (RS)		0.000	0.003	0.000	0.0	0.0	0.0
	RC ENV~1	Max	0.002	0.004	-0.002	0.0	0.0	0.0
		Min	-0.001	-0.003	-0.004	-0.0	-0.0	-0.0
	RC ENV~2	Max	0.001	0.000	-0.002	-0.0	0.0	0.0
		Min	-0.000	0.000	-0.003	-0.0	-0.0	-0.0
305	SX (RS)		0.001	0.000	0.000	0.0	0.0	0.0
	SY (RS)		0.000	0.002	0.000	0.0	0.0	0.0
	RC ENV~1	Max	0.001	0.003	-0.002	0.0	0.0	0.0
		Min	-0.001	-0.002	-0.004	-0.0	-0.0	-0.0
	RC ENV~2	Max	0.000	0.000	-0.002	-0.0	0.0	0.0
		Min	-0.000	0.000	-0.003	-0.0	-0.0	-0.0
306	SX (RS)		0.001	0.000	0.000	0.0	0.0	0.0
	SY (RS)		0.000	0.001	0.000	0.0	0.0	0.0
	RC ENV~1	Max	0.001	0.002	-0.002	0.0	0.0	0.0
		Min	-0.001	-0.001	-0.004	-0.0	-0.0	-0.0
	RC ENV~2	Max	0.000	0.000	-0.002	-0.0	0.0	0.0
		Min	-0.000	0.000	-0.003	-0.0	-0.0	-0.0
307	SX (RS)		0.000	0.000	0.000	0.0	0.0	0.0
	SY (RS)		0.000	0.001	0.000	0.0	0.0	0.0
	RC ENV~1	Max	0.000	0.001	-0.002	0.0	0.0	0.0

	Min	-0.000	-0.001	-0.004	-0.0	-0.0	-0.0
RC ENV~2	Max	0.000	0.000	-0.002	-0.0	0.0	0.0
	Min	-0.000	0.000	-0.003	-0.0	-0.0	-0.0
308	SX (RS)	0.000	0.000	0.000	0.0	0.0	0.0
	SY (RS)	0.000	0.000	0.000	0.0	0.0	0.0
RC ENV~1	Max	0.000	0.000	-0.002	0.0	0.0	0.0
	Min	-0.000	-0.000	-0.004	-0.0	-0.0	-0.0
RC ENV~2	Max	0.000	0.000	-0.002	-0.0	0.0	0.0
	Min	-0.000	0.000	-0.003	-0.0	-0.0	-0.0
309	SX (RS)	0.009	0.000	0.000	0.0	0.0	0.0
	SY (RS)	0.000	0.006	0.000	0.0	0.0	0.0
RC ENV~1	Max	0.009	0.006	-0.003	0.0	0.0	0.0
	Min	-0.009	-0.006	-0.004	-0.0	-0.0	-0.0
RC ENV~2	Max	0.002	0.000	-0.003	-0.0	0.0	0.0
	Min	-0.001	-0.000	-0.003	-0.0	-0.0	-0.0
310	SX (RS)	0.007	0.000	0.000	0.0	0.0	0.0
	SY (RS)	0.000	0.005	0.000	0.0	0.0	0.0
RC ENV~1	Max	0.007	0.005	-0.003	0.0	0.0	0.0
	Min	-0.007	-0.006	-0.004	-0.0	-0.0	-0.0
RC ENV~2	Max	0.001	0.000	-0.003	-0.0	0.0	0.0
	Min	-0.001	-0.000	-0.003	-0.0	-0.0	-0.0
311	SX (RS)	0.006	0.000	0.000	0.0	0.0	0.0
	SY (RS)	0.000	0.005	0.000	0.0	0.0	0.0
RC ENV~1	Max	0.006	0.005	-0.003	0.0	0.0	0.0
	Min	-0.006	-0.005	-0.004	-0.0	-0.0	-0.0
RC ENV~2	Max	0.001	0.000	-0.003	-0.0	0.0	0.0
	Min	-0.001	-0.000	-0.003	-0.0	-0.0	-0.0
312	SX (RS)	0.004	0.000	0.000	0.0	0.0	0.0
	SY (RS)	0.000	0.004	0.000	0.0	0.0	0.0
RC ENV~1	Max	0.004	0.004	-0.003	0.0	0.0	0.0
	Min	-0.004	-0.004	-0.004	-0.0	-0.0	-0.0
RC ENV~2	Max	0.001	0.000	-0.003	0.0	0.0	0.0
	Min	-0.001	-0.000	-0.003	-0.0	-0.0	-0.0
313	SX (RS)	0.003	0.000	0.000	0.0	0.0	0.0
	SY (RS)	0.000	0.003	0.000	0.0	0.0	0.0
RC ENV~1	Max	0.003	0.003	-0.003	0.0	0.0	0.0
	Min	-0.003	-0.003	-0.004	-0.0	-0.0	-0.0
RC ENV~2	Max	0.001	0.000	-0.003	0.0	0.0	0.0
	Min	-0.000	-0.000	-0.003	-0.0	-0.0	-0.0
314	SX (RS)	0.002	0.000	0.000	0.0	0.0	0.0
	SY (RS)	0.000	0.002	0.000	0.0	0.0	0.0
RC ENV~1	Max	0.002	0.002	-0.002	0.0	0.0	0.0
	Min	-0.002	-0.002	-0.004	-0.0	-0.0	-0.0
RC ENV~2	Max	0.000	0.000	-0.002	0.0	0.0	0.0
	Min	-0.000	-0.000	-0.003	-0.0	-0.0	-0.0
315	SX (RS)	0.001	0.000	0.000	0.0	0.0	0.0
	SY (RS)	0.000	0.001	0.000	0.0	0.0	0.0
RC ENV~1	Max	0.001	0.001	-0.002	0.0	0.0	0.0
	Min	-0.001	-0.001	-0.004	-0.0	-0.0	-0.0
RC ENV~2	Max	0.000	0.000	-0.002	0.0	0.0	0.0
	Min	-0.000	-0.000	-0.003	-0.0	-0.0	-0.0
316	SX (RS)	0.000	0.000	0.000	0.0	0.0	0.0
	SY (RS)	0.000	0.000	0.000	0.0	0.0	0.0

	RC ENV~1	Max	0.000	0.000	-0.002	0.0	0.0	0.0
		Min	-0.000	-0.000	-0.004	-0.0	-0.0	-0.0
	RC ENV~2	Max	0.000	0.000	-0.002	0.0	0.0	0.0
		Min	-0.000	-0.000	-0.003	-0.0	-0.0	-0.0
317	SX (RS)		0.009	0.000	0.000	0.0	0.0	0.0
	SY (RS)		0.000	0.006	0.000	0.0	0.0	0.0
	RC ENV~1	Max	0.009	0.006	-0.003	0.0	0.0	0.0
		Min	-0.009	-0.006	-0.004	-0.0	-0.0	-0.0
	RC ENV~2	Max	0.002	0.000	-0.003	0.0	0.0	0.0
		Min	-0.001	0.000	-0.003	0.0	-0.0	-0.0
318	SX (RS)		0.007	0.000	0.000	0.0	0.0	0.0
	SY (RS)		0.000	0.005	0.000	0.0	0.0	0.0
	RC ENV~1	Max	0.007	0.006	-0.003	0.0	0.0	0.0
		Min	-0.007	-0.005	-0.004	-0.0	-0.0	-0.0
	RC ENV~2	Max	0.001	0.000	-0.003	0.0	0.0	0.0
		Min	-0.001	0.000	-0.003	-0.0	-0.0	-0.0
319	SX (RS)		0.006	0.000	0.000	0.0	0.0	0.0
	SY (RS)		0.000	0.005	0.000	0.0	0.0	0.0
	RC ENV~1	Max	0.006	0.005	-0.003	0.0	0.0	0.0
		Min	-0.006	-0.005	-0.004	-0.0	-0.0	-0.0
	RC ENV~2	Max	0.001	0.000	-0.003	0.0	0.0	0.0
		Min	-0.001	0.000	-0.003	-0.0	-0.0	-0.0
320	SX (RS)		0.004	0.000	0.000	0.0	0.0	0.0
	SY (RS)		0.000	0.004	0.000	0.0	0.0	0.0
	RC ENV~1	Max	0.004	0.004	-0.003	0.0	0.0	0.0
		Min	-0.004	-0.004	-0.004	-0.0	-0.0	-0.0
	RC ENV~2	Max	0.001	0.000	-0.003	-0.0	0.0	0.0
		Min	-0.001	0.000	-0.003	-0.0	-0.0	-0.0
321	SX (RS)		0.003	0.000	0.000	0.0	0.0	0.0
	SY (RS)		0.000	0.003	0.000	0.0	0.0	0.0
	RC ENV~1	Max	0.003	0.003	-0.003	0.0	0.0	0.0
		Min	-0.003	-0.003	-0.004	-0.0	-0.0	-0.0
	RC ENV~2	Max	0.001	0.000	-0.003	-0.0	0.0	0.0
		Min	-0.000	0.000	-0.003	-0.0	-0.0	-0.0
322	SX (RS)		0.002	0.000	0.000	0.0	0.0	0.0
	SY (RS)		0.000	0.002	0.000	0.0	0.0	0.0
	RC ENV~1	Max	0.002	0.002	-0.003	0.0	0.0	0.0
		Min	-0.002	-0.002	-0.004	-0.0	-0.0	-0.0
	RC ENV~2	Max	0.000	0.000	-0.003	-0.0	0.0	0.0
		Min	-0.000	0.000	-0.003	-0.0	-0.0	-0.0
323	SX (RS)		0.001	0.000	0.000	0.0	0.0	0.0
	SY (RS)		0.000	0.001	0.000	0.0	0.0	0.0
	RC ENV~1	Max	0.001	0.001	-0.003	0.0	0.0	0.0
		Min	-0.001	-0.001	-0.004	-0.0	-0.0	-0.0
	RC ENV~2	Max	0.000	0.000	-0.003	-0.0	0.0	0.0
		Min	-0.000	0.000	-0.003	-0.0	-0.0	-0.0
324	SX (RS)		0.000	0.000	0.000	0.0	0.0	0.0
	SY (RS)		0.000	0.000	0.000	0.0	0.0	0.0
	RC ENV~1	Max	0.000	0.000	-0.003	0.0	0.0	0.0
		Min	-0.000	-0.000	-0.004	-0.0	-0.0	-0.0
	RC ENV~2	Max	0.000	0.000	-0.003	-0.0	0.0	0.0
		Min	-0.000	0.000	-0.003	-0.0	-0.0	-0.0

325	SX (RS)	0.002	0.000	0.000	0.0	0.0	0.0
	SY (RS)	0.000	0.006	0.000	0.0	0.0	0.0
RC ENV~1	Max	0.002	0.006	-0.002	0.0	0.0	0.0
	Min	-0.002	-0.006	-0.004	-0.0	-0.0	-0.0
RC ENV~2	Max	0.001	-0.000	-0.003	-0.0	0.0	0.0
	Min	-0.001	-0.000	-0.003	-0.0	-0.0	-0.0
326	SX (RS)	0.002	0.000	0.000	0.0	0.0	0.0
	SY (RS)	0.000	0.005	0.000	0.0	0.0	0.0
RC ENV~1	Max	0.002	0.005	-0.002	0.0	0.0	0.0
	Min	-0.002	-0.005	-0.004	-0.0	-0.0	-0.0
RC ENV~2	Max	0.001	-0.000	-0.003	-0.0	0.0	0.0
	Min	-0.001	-0.000	-0.003	-0.0	-0.0	-0.0
327	SX (RS)	0.002	0.000	0.000	0.0	0.0	0.0
	SY (RS)	0.000	0.004	0.000	0.0	0.0	0.0
RC ENV~1	Max	0.002	0.004	-0.002	0.0	0.0	0.0
	Min	-0.002	-0.004	-0.004	-0.0	-0.0	-0.0
RC ENV~2	Max	0.001	-0.000	-0.003	0.0	0.0	0.0
	Min	-0.001	-0.000	-0.003	-0.0	-0.0	-0.0
328	SX (RS)	0.001	0.000	0.000	0.0	0.0	0.0
	SY (RS)	0.000	0.003	0.000	0.0	0.0	0.0
RC ENV~1	Max	0.001	0.003	-0.002	0.0	0.0	0.0
	Min	-0.001	-0.004	-0.004	-0.0	-0.0	-0.0
RC ENV~2	Max	0.000	-0.000	-0.003	0.0	0.0	0.0
	Min	-0.000	-0.000	-0.003	0.0	-0.0	-0.0
329	SX (RS)	0.001	0.000	0.000	0.0	0.0	0.0
	SY (RS)	0.000	0.002	0.000	0.0	0.0	0.0
RC ENV~1	Max	0.001	0.002	-0.002	0.0	0.0	0.0
	Min	-0.001	-0.003	-0.004	-0.0	-0.0	-0.0
RC ENV~2	Max	0.000	-0.000	-0.002	0.0	0.0	0.0
	Min	-0.000	-0.000	-0.003	0.0	-0.0	-0.0
330	SX (RS)	0.001	0.000	0.000	0.0	0.0	0.0
	SY (RS)	0.000	0.001	0.000	0.0	0.0	0.0
RC ENV~1	Max	0.001	0.001	-0.002	0.0	0.0	0.0
	Min	-0.001	-0.002	-0.004	-0.0	-0.0	-0.0
RC ENV~2	Max	0.000	-0.000	-0.002	0.0	0.0	0.0
	Min	-0.000	-0.000	-0.003	0.0	-0.0	-0.0
331	SX (RS)	0.000	0.000	0.000	0.0	0.0	0.0
	SY (RS)	0.000	0.001	0.000	0.0	0.0	0.0
RC ENV~1	Max	0.000	0.001	-0.002	0.0	0.0	0.0
	Min	-0.000	-0.001	-0.004	-0.0	-0.0	-0.0
RC ENV~2	Max	0.000	-0.000	-0.002	0.0	0.0	0.0
	Min	-0.000	-0.000	-0.003	0.0	-0.0	-0.0
332	SX (RS)	0.000	0.000	0.000	0.0	0.0	0.0
	SY (RS)	0.000	0.000	0.000	0.0	0.0	0.0
RC ENV~1	Max	0.000	0.000	-0.002	0.0	0.0	0.0
	Min	-0.000	-0.000	-0.004	-0.0	-0.0	-0.0
RC ENV~2	Max	0.000	-0.000	-0.002	0.0	0.0	0.0
	Min	-0.000	-0.000	-0.003	0.0	-0.0	-0.0
333	SX (RS)	0.003	0.000	0.000	0.0	0.0	0.0
	SY (RS)	0.000	0.002	0.000	0.0	0.0	0.0
RC ENV~1	Max	0.003	0.002	-0.002	0.0	0.0	0.0
	Min	-0.003	-0.002	-0.004	-0.0	-0.0	-0.0
RC ENV~2	Max	0.001	0.000	-0.003	0.0	0.0	0.0

	Min	-0.001	0.000	-0.003	0.0	0.0	0.0
334	SX (RS)	0.003	0.001	0.000	0.0	0.0	0.0
	SY (RS)	0.000	0.002	0.000	0.0	0.0	0.0
RC ENV~1	Max	0.003	0.003	-0.002	0.0	0.0	0.0
	Min	-0.003	-0.002	-0.004	-0.0	-0.0	-0.0
RC ENV~2	Max	0.001	0.000	-0.003	0.0	0.0	0.0
	Min	-0.001	0.000	-0.003	0.0	0.0	0.0
335	SX (RS)	0.003	0.001	0.000	0.0	0.0	0.0
	SY (RS)	0.000	0.003	0.000	0.0	0.0	0.0
RC ENV~1	Max	0.003	0.003	-0.002	0.0	0.0	0.0
	Min	-0.003	-0.003	-0.004	-0.0	0.0	-0.0
RC ENV~2	Max	0.001	0.000	-0.003	0.0	0.0	0.0
	Min	-0.001	0.000	-0.003	0.0	0.0	0.0
336	SX (RS)	0.003	0.001	0.000	0.0	0.0	0.0
	SY (RS)	0.000	0.004	0.000	0.0	0.0	0.0
RC ENV~1	Max	0.003	0.004	-0.002	0.0	0.0	0.0
	Min	-0.003	-0.004	-0.005	-0.0	-0.0	-0.0
RC ENV~2	Max	0.001	0.000	-0.003	0.0	0.0	0.0
	Min	-0.001	0.000	-0.003	0.0	-0.0	0.0
337	SX (RS)	0.003	0.001	0.000	0.0	0.0	0.0
	SY (RS)	0.000	0.005	0.000	0.0	0.0	0.0
RC ENV~1	Max	0.003	0.005	-0.002	0.0	0.0	0.0
	Min	-0.003	-0.004	-0.005	-0.0	-0.0	-0.0
RC ENV~2	Max	0.001	0.000	-0.003	0.0	0.0	0.0
	Min	-0.001	0.000	-0.003	0.0	-0.0	0.0
338	SX (RS)	0.003	0.001	0.000	0.0	0.0	0.0
	SY (RS)	0.000	0.005	0.000	0.0	0.0	0.0
RC ENV~1	Max	0.003	0.005	-0.002	0.0	0.0	0.0
	Min	-0.003	-0.005	-0.005	-0.0	-0.0	-0.0
RC ENV~2	Max	0.001	0.000	-0.003	0.0	0.0	0.0
	Min	-0.001	0.000	-0.003	0.0	-0.0	0.0
339	SX (RS)	0.003	0.001	0.000	0.0	0.0	0.0
	SY (RS)	0.000	0.006	0.000	0.0	0.0	0.0
RC ENV~1	Max	0.003	0.006	-0.002	0.0	0.0	0.0
	Min	-0.003	-0.006	-0.004	-0.0	-0.0	-0.0
RC ENV~2	Max	0.001	0.000	-0.003	0.0	-0.0	0.0
	Min	-0.001	0.000	-0.003	0.0	-0.0	-0.0
340	SX (RS)	0.003	0.001	0.000	0.0	0.0	0.0
	SY (RS)	0.000	0.006	0.000	0.0	0.0	0.0
RC ENV~1	Max	0.003	0.006	-0.002	0.0	0.0	0.0
	Min	-0.003	-0.006	-0.004	-0.0	-0.0	-0.0
RC ENV~2	Max	0.001	0.000	-0.003	0.0	-0.0	0.0
	Min	-0.001	0.000	-0.003	0.0	-0.0	-0.0
341	SX (RS)	0.003	0.001	0.000	0.0	0.0	0.0
	SY (RS)	0.000	0.006	0.000	0.0	0.0	0.0
RC ENV~1	Max	0.003	0.006	-0.002	0.0	0.0	0.0
	Min	-0.003	-0.006	-0.005	-0.0	-0.0	-0.0
RC ENV~2	Max	0.001	0.000	-0.003	0.0	0.0	0.0
	Min	-0.001	0.000	-0.003	0.0	0.0	-0.0
342	SX (RS)	0.003	0.001	0.000	0.0	0.0	0.0
	SY (RS)	0.000	0.006	0.000	0.0	0.0	0.0
RC ENV~1	Max	0.003	0.006	-0.002	0.0	0.0	0.0
	Min	-0.003	-0.006	-0.005	-0.0	0.0	-0.0

	RC ENV~2	Max	0.001	0.000	-0.003	0.0	0.0	0.0
		Min	-0.001	0.000	-0.003	0.0	0.0	-0.0
343	SX (RS)		0.003	0.001	0.000	0.0	0.0	0.0
	SY (RS)		0.000	0.005	0.000	0.0	0.0	0.0
	RC ENV~1	Max	0.003	0.005	-0.002	0.0	0.0	0.0
		Min	-0.003	-0.005	-0.005	-0.0	-0.0	-0.0
	RC ENV~2	Max	0.001	0.000	-0.003	0.0	0.0	0.0
		Min	-0.001	0.000	-0.004	0.0	0.0	-0.0
344	SX (RS)		0.003	0.001	0.000	0.0	0.0	0.0
	SY (RS)		0.000	0.005	0.000	0.0	0.0	0.0
	RC ENV~1	Max	0.003	0.005	-0.002	0.0	0.0	0.0
		Min	-0.003	-0.004	-0.005	-0.0	-0.0	-0.0
	RC ENV~2	Max	0.001	0.001	-0.003	0.0	0.0	-0.0
		Min	-0.001	0.000	-0.004	0.0	0.0	-0.0
345	SX (RS)		0.003	0.001	0.000	0.0	0.0	0.0
	SY (RS)		0.000	0.004	0.000	0.0	0.0	0.0
	RC ENV~1	Max	0.003	0.004	-0.002	0.0	0.0	0.0
		Min	-0.003	-0.004	-0.005	-0.0	-0.0	-0.0
	RC ENV~2	Max	0.001	0.001	-0.003	0.0	0.0	-0.0
		Min	-0.001	0.000	-0.004	0.0	0.0	-0.0
346	SX (RS)		0.003	0.001	0.000	0.0	0.0	0.0
	SY (RS)		0.000	0.003	0.000	0.0	0.0	0.0
	RC ENV~1	Max	0.003	0.003	-0.002	0.0	0.0	0.0
		Min	-0.003	-0.003	-0.005	-0.0	-0.0	-0.0
	RC ENV~2	Max	0.001	0.001	-0.003	0.0	0.0	-0.0
		Min	-0.001	0.000	-0.004	0.0	-0.0	-0.0
347	SX (RS)		0.003	0.001	0.000	0.0	0.0	0.0
	SY (RS)		0.000	0.002	0.000	0.0	0.0	0.0
	RC ENV~1	Max	0.003	0.003	-0.002	0.0	0.0	0.0
		Min	-0.003	-0.002	-0.005	-0.0	-0.0	-0.0
	RC ENV~2	Max	0.001	0.000	-0.003	0.0	-0.0	-0.0
		Min	-0.001	0.000	-0.004	0.0	-0.0	-0.0
348	SX (RS)		0.003	0.000	0.000	0.0	0.0	0.0
	SY (RS)		0.000	0.002	0.000	0.0	0.0	0.0
	RC ENV~1	Max	0.003	0.002	-0.003	0.0	0.0	0.0
		Min	-0.003	-0.002	-0.005	-0.0	-0.0	-0.0
	RC ENV~2	Max	0.001	0.000	-0.003	0.0	0.0	-0.0
		Min	-0.001	0.000	-0.004	0.0	-0.0	-0.0
349	SX (RS)		0.003	0.001	0.000	0.0	0.0	0.0
	SY (RS)		0.000	0.006	0.000	0.0	0.0	0.0
	RC ENV~1	Max	0.003	0.006	-0.002	0.0	0.0	0.0
		Min	-0.003	-0.006	-0.004	-0.0	-0.0	-0.0
	RC ENV~2	Max	0.001	0.000	-0.003	-0.0	-0.0	0.0
		Min	-0.001	-0.000	-0.003	-0.0	-0.0	-0.0
350	SX (RS)		0.003	0.001	0.000	0.0	0.0	0.0
	SY (RS)		0.000	0.006	0.000	0.0	0.0	0.0
	RC ENV~1	Max	0.003	0.006	-0.002	0.0	0.0	0.0
		Min	-0.003	-0.006	-0.004	-0.0	-0.0	-0.0
	RC ENV~2	Max	0.001	-0.000	-0.003	-0.0	-0.0	0.0
		Min	-0.001	-0.000	-0.003	-0.0	-0.0	-0.0
351	SX (RS)		0.003	0.001	0.000	0.0	0.0	0.0
	SY (RS)		0.000	0.005	0.000	0.0	0.0	0.0

	RC ENV~1	Max	0.003	0.005	-0.003	0.0	0.0	0.0
		Min	-0.003	-0.005	-0.004	-0.0	-0.0	-0.0
	RC ENV~2	Max	0.001	-0.000	-0.003	-0.0	-0.0	0.0
		Min	-0.001	-0.000	-0.003	-0.0	-0.0	-0.0
352	SX (RS)		0.003	0.001	0.000	0.0	0.0	0.0
	SY (RS)		0.000	0.005	0.000	0.0	0.0	0.0
	RC ENV~1	Max	0.003	0.004	-0.002	0.0	0.0	0.0
		Min	-0.003	-0.005	-0.004	-0.0	-0.0	-0.0
	RC ENV~2	Max	0.001	-0.000	-0.003	-0.0	-0.0	-0.0
		Min	-0.001	-0.000	-0.003	-0.0	-0.0	-0.0
353	SX (RS)		0.003	0.001	0.000	0.0	0.0	0.0
	SY (RS)		0.000	0.004	0.000	0.0	0.0	0.0
	RC ENV~1	Max	0.003	0.004	-0.002	0.0	0.0	0.0
		Min	-0.003	-0.004	-0.005	-0.0	-0.0	-0.0
	RC ENV~2	Max	0.001	-0.000	-0.003	-0.0	0.0	-0.0
		Min	-0.001	-0.000	-0.003	-0.0	-0.0	-0.0
354	SX (RS)		0.003	0.001	0.000	0.0	0.0	0.0
	SY (RS)		0.000	0.003	0.000	0.0	0.0	0.0
	RC ENV~1	Max	0.003	0.003	-0.002	0.0	0.0	0.0
		Min	-0.003	-0.003	-0.005	-0.0	-0.0	-0.0
	RC ENV~2	Max	0.001	-0.000	-0.003	-0.0	0.0	-0.0
		Min	-0.001	-0.000	-0.003	-0.0	0.0	-0.0
355	SX (RS)		0.003	0.001	0.000	0.0	0.0	0.0
	SY (RS)		0.000	0.002	0.000	0.0	0.0	0.0
	RC ENV~1	Max	0.003	0.002	-0.002	0.0	0.0	0.0
		Min	-0.003	-0.003	-0.004	-0.0	-0.0	-0.0
	RC ENV~2	Max	0.001	-0.000	-0.003	-0.0	0.0	-0.0
		Min	-0.001	-0.000	-0.003	-0.0	0.0	-0.0
356	SX (RS)		0.003	0.000	0.000	0.0	0.0	0.0
	SY (RS)		0.000	0.002	0.000	0.0	0.0	0.0
	RC ENV~1	Max	0.003	0.002	-0.003	0.0	0.0	0.0
		Min	-0.003	-0.002	-0.004	-0.0	-0.0	-0.0
	RC ENV~2	Max	0.001	-0.000	-0.003	-0.0	0.0	-0.0
		Min	-0.001	-0.000	-0.003	-0.0	0.0	-0.0
357	SX (RS)		0.003	0.001	0.000	0.0	0.0	0.0
	SY (RS)		0.000	0.006	0.000	0.0	0.0	0.0
	RC ENV~1	Max	0.003	0.006	-0.002	0.0	0.0	0.0
		Min	-0.003	-0.006	-0.004	-0.0	-0.0	-0.0
	RC ENV~2	Max	0.001	0.000	-0.003	-0.0	0.0	0.0
		Min	-0.001	-0.000	-0.003	-0.0	0.0	-0.0
358	SX (RS)		0.003	0.001	0.000	0.0	0.0	0.0
	SY (RS)		0.000	0.006	0.000	0.0	0.0	0.0
	RC ENV~1	Max	0.003	0.006	-0.002	0.0	0.0	0.0
		Min	-0.003	-0.006	-0.004	-0.0	-0.0	-0.0
	RC ENV~2	Max	0.001	0.000	-0.003	-0.0	0.0	0.0
		Min	-0.001	-0.000	-0.003	-0.0	0.0	-0.0
359	SX (RS)		0.003	0.001	0.000	0.0	0.0	0.0
	SY (RS)		0.000	0.005	0.000	0.0	0.0	0.0
	RC ENV~1	Max	0.003	0.005	-0.003	0.0	0.0	0.0
		Min	-0.003	-0.005	-0.004	-0.0	-0.0	-0.0
	RC ENV~2	Max	0.001	-0.000	-0.003	-0.0	0.0	0.0
		Min	-0.001	-0.000	-0.003	-0.0	0.0	0.0
360	SX (RS)		0.003	0.001	0.000	0.0	0.0	0.0

	SY (RS)	0.000	0.005	0.000	0.0	0.0	0.0
	RC ENV~1 Max	0.003	0.004	-0.002	0.0	0.0	0.0
	Min	-0.003	-0.005	-0.004	-0.0	-0.0	-0.0
	RC ENV~2 Max	0.001	-0.000	-0.003	-0.0	0.0	0.0
	Min	-0.001	-0.000	-0.003	-0.0	0.0	0.0
361	SX (RS)	0.003	0.001	0.000	0.0	0.0	0.0
	SY (RS)	0.000	0.004	0.000	0.0	0.0	0.0
	RC ENV~1 Max	0.003	0.004	-0.002	0.0	0.0	0.0
	Min	-0.003	-0.004	-0.004	-0.0	-0.0	-0.0
	RC ENV~2 Max	0.001	-0.000	-0.003	-0.0	0.0	0.0
	Min	-0.001	-0.000	-0.003	-0.0	-0.0	0.0
362	SX (RS)	0.003	0.001	0.000	0.0	0.0	0.0
	SY (RS)	0.000	0.003	0.000	0.0	0.0	0.0
	RC ENV~1 Max	0.003	0.003	-0.002	0.0	0.0	0.0
	Min	-0.003	-0.003	-0.005	-0.0	-0.0	-0.0
	RC ENV~2 Max	0.001	-0.000	-0.003	-0.0	-0.0	0.0
	Min	-0.001	-0.000	-0.003	-0.0	-0.0	0.0
363	SX (RS)	0.003	0.001	0.000	0.0	0.0	0.0
	SY (RS)	0.000	0.002	0.000	0.0	0.0	0.0
	RC ENV~1 Max	0.003	0.002	-0.002	0.0	0.0	0.0
	Min	-0.003	-0.003	-0.004	-0.0	-0.0	-0.0
	RC ENV~2 Max	0.001	-0.000	-0.003	-0.0	-0.0	0.0
	Min	-0.001	-0.000	-0.003	-0.0	-0.0	0.0
364	SX (RS)	0.003	0.000	0.000	0.0	0.0	0.0
	SY (RS)	0.000	0.002	0.000	0.0	0.0	0.0
	RC ENV~1 Max	0.003	0.002	-0.003	0.0	0.0	0.0
	Min	-0.003	-0.002	-0.004	-0.0	-0.0	-0.0
	RC ENV~2 Max	0.001	0.000	-0.003	-0.0	-0.0	0.0
	Min	-0.001	-0.000	-0.003	-0.0	-0.0	0.0
365	SX (RS)	0.003	0.000	0.000	0.0	0.0	0.0
	SY (RS)	0.000	0.002	0.000	0.0	0.0	0.0
	RC ENV~1 Max	0.003	0.002	-0.003	0.0	0.0	0.0
	Min	-0.002	-0.002	-0.004	0.0	-0.0	-0.0
	RC ENV~2 Max	0.001	-0.000	-0.003	0.0	0.0	0.0
	Min	-0.000	-0.000	-0.003	0.0	-0.0	0.0
366	SX (RS)	0.003	0.000	0.000	0.0	0.0	0.0
	SY (RS)	0.001	0.002	0.000	0.0	0.0	0.0
	RC ENV~1 Max	0.003	0.002	-0.003	0.0	0.0	0.0
	Min	-0.002	-0.002	-0.004	0.0	-0.0	-0.0
	RC ENV~2 Max	0.002	-0.000	-0.003	0.0	0.0	0.0
	Min	-0.000	-0.000	-0.003	0.0	0.0	0.0
367	SX (RS)	0.003	0.000	0.000	0.0	0.0	0.0
	SY (RS)	0.001	0.002	0.000	0.0	0.0	0.0
	RC ENV~1 Max	0.004	0.002	-0.003	0.0	0.0	0.0
	Min	-0.002	-0.002	-0.005	-0.0	-0.0	-0.0
	RC ENV~2 Max	0.002	-0.000	-0.003	0.0	0.0	0.0
	Min	-0.000	-0.000	-0.003	0.0	0.0	0.0
368	SX (RS)	0.003	0.000	0.000	0.0	0.0	0.0
	SY (RS)	0.001	0.002	0.000	0.0	0.0	0.0
	RC ENV~1 Max	0.004	0.002	-0.003	0.0	0.0	0.0
	Min	-0.002	-0.002	-0.004	-0.0	-0.0	-0.0
	RC ENV~2 Max	0.003	-0.000	-0.003	-0.0	0.0	0.0
	Min	-0.000	-0.000	-0.003	-0.0	0.0	0.0

369	SX (RS)	0.004	0.000	0.000	0.0	0.0	0.0
	SY (RS)	0.001	0.002	0.000	0.0	0.0	0.0
RC ENV~1	Max	0.005	0.002	-0.003	-0.0	0.0	0.0
	Min	-0.002	-0.002	-0.004	-0.0	-0.0	-0.0
RC ENV~2	Max	0.003	-0.000	-0.003	-0.0	0.0	0.0
	Min	-0.000	-0.000	-0.003	-0.0	0.0	0.0
370	SX (RS)	0.004	0.000	0.000	0.0	0.0	0.0
	SY (RS)	0.001	0.002	0.000	0.0	0.0	0.0
RC ENV~1	Max	0.005	0.002	-0.003	-0.0	0.0	0.0
	Min	-0.002	-0.002	-0.004	-0.0	-0.0	-0.0
RC ENV~2	Max	0.003	-0.000	-0.003	-0.0	0.0	0.0
	Min	0.000	-0.000	-0.003	-0.0	0.0	0.0
371	SX (RS)	0.004	0.000	0.000	0.0	0.0	0.0
	SY (RS)	0.001	0.002	0.000	0.0	0.0	0.0
RC ENV~1	Max	0.006	0.002	-0.003	0.0	0.0	0.0
	Min	-0.003	-0.002	-0.004	0.0	-0.0	-0.0
RC ENV~2	Max	0.004	-0.000	-0.003	0.0	0.0	0.0
	Min	0.000	-0.000	-0.003	0.0	0.0	0.0
372	SX (RS)	0.004	0.000	0.000	0.0	0.0	0.0
	SY (RS)	0.000	0.002	0.000	0.0	0.0	0.0
RC ENV~1	Max	0.006	0.002	-0.003	0.0	0.0	0.0
	Min	-0.003	-0.002	-0.004	0.0	-0.0	-0.0
RC ENV~2	Max	0.004	-0.000	-0.003	0.0	0.0	0.0
	Min	0.000	-0.000	-0.003	0.0	0.0	0.0
373	SX (RS)	0.004	0.000	0.000	0.0	0.0	0.0
	SY (RS)	0.000	0.002	0.000	0.0	0.0	0.0
RC ENV~1	Max	0.006	0.002	-0.003	0.0	0.0	0.0
	Min	-0.003	-0.002	-0.004	-0.0	-0.0	-0.0
RC ENV~2	Max	0.004	-0.000	-0.003	0.0	0.0	0.0
	Min	0.000	-0.000	-0.003	0.0	0.0	0.0
374	SX (RS)	0.004	0.000	0.000	0.0	0.0	0.0
	SY (RS)	0.000	0.002	0.000	0.0	0.0	0.0
RC ENV~1	Max	0.006	0.002	-0.003	0.0	0.0	0.0
	Min	-0.003	-0.002	-0.004	-0.0	-0.0	-0.0
RC ENV~2	Max	0.004	-0.000	-0.003	0.0	0.0	-0.0
	Min	0.000	-0.000	-0.003	-0.0	0.0	-0.0
375	SX (RS)	0.004	0.000	0.000	0.0	0.0	0.0
	SY (RS)	0.000	0.002	0.000	0.0	0.0	0.0
RC ENV~1	Max	0.006	0.002	-0.003	-0.0	0.0	0.0
	Min	-0.003	-0.002	-0.004	-0.0	-0.0	-0.0
RC ENV~2	Max	0.004	-0.000	-0.003	-0.0	0.0	-0.0
	Min	0.000	-0.000	-0.003	-0.0	0.0	-0.0
376	SX (RS)	0.004	0.000	0.000	0.0	0.0	0.0
	SY (RS)	0.001	0.002	0.000	0.0	0.0	0.0
RC ENV~1	Max	0.006	0.002	-0.003	-0.0	0.0	0.0
	Min	-0.003	-0.002	-0.004	-0.0	-0.0	-0.0
RC ENV~2	Max	0.004	-0.000	-0.003	-0.0	0.0	-0.0
	Min	0.000	-0.000	-0.003	-0.0	0.0	-0.0
377	SX (RS)	0.004	0.000	0.000	0.0	0.0	0.0
	SY (RS)	0.001	0.002	0.000	0.0	0.0	0.0
RC ENV~1	Max	0.005	0.002	-0.003	0.0	0.0	0.0
	Min	-0.002	-0.002	-0.004	0.0	-0.0	-0.0

	RC ENV~2	Max	0.003	-0.000	-0.003	0.0	0.0	-0.0
		Min	0.000	-0.000	-0.003	0.0	0.0	-0.0
378	SX (RS)		0.004	0.000	0.000	0.0	0.0	0.0
	SY (RS)		0.001	0.002	0.000	0.0	0.0	0.0
	RC ENV~1	Max	0.005	0.002	-0.003	0.0	0.0	0.0
		Min	-0.002	-0.002	-0.005	0.0	-0.0	-0.0
	RC ENV~2	Max	0.003	-0.000	-0.003	0.0	0.0	-0.0
		Min	-0.000	-0.000	-0.003	0.0	0.0	-0.0
379	SX (RS)		0.003	0.000	0.000	0.0	0.0	0.0
	SY (RS)		0.001	0.002	0.000	0.0	0.0	0.0
	RC ENV~1	Max	0.004	0.002	-0.003	0.0	0.0	0.0
		Min	-0.002	-0.002	-0.005	-0.0	-0.0	-0.0
	RC ENV~2	Max	0.002	-0.000	-0.003	0.0	0.0	-0.0
		Min	-0.000	-0.000	-0.004	0.0	0.0	-0.0
380	SX (RS)		0.003	0.000	0.000	0.0	0.0	0.0
	SY (RS)		0.001	0.002	0.000	0.0	0.0	0.0
	RC ENV~1	Max	0.004	0.002	-0.003	0.0	0.0	0.0
		Min	-0.002	-0.002	-0.005	-0.0	-0.0	-0.0
	RC ENV~2	Max	0.002	-0.000	-0.003	-0.0	0.0	-0.0
		Min	-0.000	-0.000	-0.004	-0.0	0.0	-0.0
381	SX (RS)		0.003	0.000	0.000	0.0	0.0	0.0
	SY (RS)		0.001	0.002	0.000	0.0	0.0	0.0
	RC ENV~1	Max	0.003	0.002	-0.003	-0.0	0.0	0.0
		Min	-0.002	-0.002	-0.005	-0.0	-0.0	-0.0
	RC ENV~2	Max	0.002	-0.000	-0.003	-0.0	0.0	-0.0
		Min	-0.000	-0.000	-0.003	-0.0	-0.0	-0.0
382	SX (RS)		0.003	0.000	0.000	0.0	0.0	0.0
	SY (RS)		0.000	0.002	0.000	0.0	0.0	0.0
	RC ENV~1	Max	0.003	0.002	-0.003	-0.0	0.0	0.0
		Min	-0.002	-0.002	-0.004	-0.0	-0.0	-0.0
	RC ENV~2	Max	0.001	-0.000	-0.003	-0.0	0.0	-0.0
		Min	-0.001	-0.000	-0.003	-0.0	-0.0	-0.0
383	SX (RS)		0.003	0.000	0.000	0.0	0.0	0.0
	SY (RS)		0.000	0.002	0.000	0.0	0.0	0.0
	RC ENV~1	Max	0.002	0.002	-0.003	0.0	0.0	0.0
		Min	-0.003	-0.002	-0.005	0.0	-0.0	-0.0
	RC ENV~2	Max	0.001	0.000	-0.003	0.0	0.0	-0.0
		Min	-0.001	0.000	-0.004	0.0	-0.0	-0.0
384	SX (RS)		0.003	0.000	0.000	0.0	0.0	0.0
	SY (RS)		0.001	0.002	0.000	0.0	0.0	0.0
	RC ENV~1	Max	0.002	0.002	-0.003	0.0	0.0	0.0
		Min	-0.003	-0.002	-0.005	0.0	-0.0	-0.0
	RC ENV~2	Max	0.000	0.000	-0.003	0.0	0.0	-0.0
		Min	-0.001	0.000	-0.004	0.0	-0.0	-0.0
385	SX (RS)		0.003	0.000	0.000	0.0	0.0	0.0
	SY (RS)		0.001	0.002	0.000	0.0	0.0	0.0
	RC ENV~1	Max	0.002	0.002	-0.003	0.0	0.0	0.0
		Min	-0.004	-0.002	-0.005	-0.0	-0.0	-0.0
	RC ENV~2	Max	0.000	0.000	-0.003	0.0	-0.0	-0.0
		Min	-0.002	0.000	-0.004	-0.0	-0.0	-0.0
386	SX (RS)		0.003	0.000	0.000	0.0	0.0	0.0
	SY (RS)		0.001	0.002	0.000	0.0	0.0	0.0
	RC ENV~1	Max	0.002	0.002	-0.003	0.0	0.0	0.0

		Min	-0.004	-0.002	-0.005	-0.0	-0.0	-0.0
	RC ENV~2	Max	0.000	0.000	-0.003	-0.0	-0.0	-0.0
		Min	-0.002	0.000	-0.004	-0.0	-0.0	-0.0
387		SX (RS)	0.004	0.000	0.000	0.0	0.0	0.0
		SY (RS)	0.001	0.002	0.000	0.0	0.0	0.0
	RC ENV~1	Max	0.002	0.002	-0.003	-0.0	0.0	0.0
		Min	-0.005	-0.002	-0.005	-0.0	-0.0	-0.0
	RC ENV~2	Max	-0.000	0.000	-0.003	-0.0	-0.0	-0.0
		Min	-0.003	0.000	-0.004	-0.0	-0.0	-0.0
388		SX (RS)	0.004	0.000	0.000	0.0	0.0	0.0
		SY (RS)	0.001	0.002	0.000	0.0	0.0	0.0
	RC ENV~1	Max	0.002	0.002	-0.003	-0.0	0.0	0.0
		Min	-0.005	-0.002	-0.005	-0.0	-0.0	-0.0
	RC ENV~2	Max	-0.000	0.000	-0.003	-0.0	-0.0	-0.0
		Min	-0.003	0.000	-0.004	-0.0	-0.0	-0.0
389		SX (RS)	0.004	0.000	0.000	0.0	0.0	0.0
		SY (RS)	0.001	0.002	0.000	0.0	0.0	0.0
	RC ENV~1	Max	0.003	0.002	-0.003	0.0	0.0	0.0
		Min	-0.006	-0.002	-0.005	0.0	-0.0	-0.0
	RC ENV~2	Max	-0.001	0.000	-0.003	0.0	-0.0	-0.0
		Min	-0.004	0.000	-0.003	0.0	-0.0	-0.0
390		SX (RS)	0.004	0.000	0.000	0.0	0.0	0.0
		SY (RS)	0.000	0.002	0.000	0.0	0.0	0.0
	RC ENV~1	Max	0.003	0.002	-0.003	0.0	0.0	0.0
		Min	-0.006	-0.002	-0.005	0.0	-0.0	-0.0
	RC ENV~2	Max	-0.001	0.000	-0.003	0.0	-0.0	-0.0
		Min	-0.004	0.000	-0.004	0.0	-0.0	-0.0
391		SX (RS)	0.004	0.000	0.000	0.0	0.0	0.0
		SY (RS)	0.000	0.002	0.000	0.0	0.0	0.0
	RC ENV~1	Max	0.003	0.002	-0.003	0.0	0.0	0.0
		Min	-0.006	-0.002	-0.005	-0.0	-0.0	-0.0
	RC ENV~2	Max	-0.001	0.000	-0.003	0.0	-0.0	-0.0
		Min	-0.004	0.000	-0.004	-0.0	-0.0	-0.0
392		SX (RS)	0.004	0.000	0.000	0.0	0.0	0.0
		SY (RS)	0.000	0.002	0.000	0.0	0.0	0.0
	RC ENV~1	Max	0.003	0.002	-0.003	0.0	0.0	0.0
		Min	-0.006	-0.002	-0.005	-0.0	-0.0	-0.0
	RC ENV~2	Max	-0.001	0.000	-0.003	-0.0	-0.0	0.0
		Min	-0.004	0.000	-0.004	-0.0	-0.0	0.0
393		SX (RS)	0.004	0.000	0.000	0.0	0.0	0.0
		SY (RS)	0.000	0.002	0.000	0.0	0.0	0.0
	RC ENV~1	Max	0.003	0.002	-0.003	-0.0	0.0	0.0
		Min	-0.006	-0.002	-0.005	-0.0	-0.0	-0.0
	RC ENV~2	Max	-0.001	0.000	-0.003	-0.0	-0.0	0.0
		Min	-0.004	0.000	-0.003	-0.0	-0.0	0.0
394		SX (RS)	0.004	0.000	0.000	0.0	0.0	0.0
		SY (RS)	0.001	0.002	0.000	0.0	0.0	0.0
	RC ENV~1	Max	0.003	0.002	-0.003	-0.0	0.0	0.0
		Min	-0.006	-0.002	-0.004	-0.0	-0.0	-0.0
	RC ENV~2	Max	-0.001	0.000	-0.003	-0.0	-0.0	0.0
		Min	-0.004	0.000	-0.003	-0.0	-0.0	0.0
395		SX (RS)	0.004	0.000	0.000	0.0	0.0	0.0
		SY (RS)	0.001	0.002	0.000	0.0	0.0	0.0

	RC ENV~1	Max	0.002	0.002	-0.003	0.0	0.0	0.0
		Min	-0.005	-0.002	-0.004	0.0	-0.0	-0.0
	RC ENV~2	Max	-0.000	0.000	-0.003	0.0	-0.0	0.0
		Min	-0.003	0.000	-0.003	0.0	-0.0	0.0
396	SX (RS)		0.004	0.000	0.000	0.0	0.0	0.0
	SY (RS)		0.001	0.002	0.000	0.0	0.0	0.0
	RC ENV~1	Max	0.002	0.002	-0.003	0.0	0.0	0.0
		Min	-0.005	-0.002	-0.005	0.0	-0.0	-0.0
	RC ENV~2	Max	-0.000	0.000	-0.003	0.0	-0.0	0.0
		Min	-0.003	0.000	-0.003	0.0	-0.0	0.0
397	SX (RS)		0.003	0.000	0.000	0.0	0.0	0.0
	SY (RS)		0.001	0.002	0.000	0.0	0.0	0.0
	RC ENV~1	Max	0.002	0.002	-0.003	0.0	0.0	0.0
		Min	-0.004	-0.002	-0.005	-0.0	-0.0	-0.0
	RC ENV~2	Max	-0.000	0.000	-0.003	0.0	-0.0	0.0
		Min	-0.002	0.000	-0.004	0.0	-0.0	0.0
398	SX (RS)		0.003	0.000	0.000	0.0	0.0	0.0
	SY (RS)		0.001	0.002	0.000	0.0	0.0	0.0
	RC ENV~1	Max	0.002	0.002	-0.003	0.0	0.0	0.0
		Min	-0.004	-0.002	-0.005	-0.0	-0.0	-0.0
	RC ENV~2	Max	0.000	0.000	-0.003	-0.0	-0.0	0.0
		Min	-0.002	0.000	-0.004	-0.0	-0.0	0.0
399	SX (RS)		0.003	0.000	0.000	0.0	0.0	0.0
	SY (RS)		0.001	0.002	0.000	0.0	0.0	0.0
	RC ENV~1	Max	0.002	0.002	-0.003	-0.0	0.0	0.0
		Min	-0.003	-0.002	-0.005	-0.0	-0.0	-0.0
	RC ENV~2	Max	0.000	0.000	-0.003	-0.0	-0.0	0.0
		Min	-0.001	0.000	-0.003	-0.0	-0.0	0.0
400	SX (RS)		0.003	0.000	0.000	0.0	0.0	0.0
	SY (RS)		0.000	0.002	0.000	0.0	0.0	0.0
	RC ENV~1	Max	0.002	0.002	-0.003	-0.0	0.0	0.0
		Min	-0.003	-0.002	-0.004	-0.0	-0.0	-0.0
	RC ENV~2	Max	0.001	0.000	-0.003	-0.0	0.0	0.0
		Min	-0.001	0.000	-0.003	-0.0	-0.0	0.0
401	SX (RS)		0.000	0.000	0.000	0.0	0.0	0.0
	SY (RS)		0.000	0.000	0.000	0.0	0.0	0.0
	RC ENV~1	Max	0.000	0.000	-0.002	0.0	-0.0	0.0
		Min	-0.000	-0.000	-0.004	-0.0	-0.0	0.0
	RC ENV~2	Max	0.000	-0.000	-0.003	-0.0	-0.0	0.0
		Min	-0.000	-0.000	-0.003	-0.0	-0.0	0.0
402	SX (RS)		0.000	0.000	0.000	0.0	0.0	0.0
	SY (RS)		0.000	0.000	0.000	0.0	0.0	0.0
	RC ENV~1	Max	0.000	0.000	-0.002	0.0	-0.0	0.0
		Min	-0.000	-0.000	-0.004	-0.0	-0.0	0.0
	RC ENV~2	Max	0.000	-0.000	-0.003	-0.0	-0.0	0.0
		Min	-0.000	-0.000	-0.003	-0.0	-0.0	0.0
403	SX (RS)		0.000	0.000	0.000	0.0	0.0	0.0
	SY (RS)		0.000	0.000	0.000	0.0	0.0	0.0
	RC ENV~1	Max	0.000	0.000	-0.002	0.0	-0.0	0.0
		Min	-0.000	-0.000	-0.004	-0.0	-0.0	0.0
	RC ENV~2	Max	0.000	-0.000	-0.003	-0.0	-0.0	0.0
		Min	-0.000	-0.000	-0.003	-0.0	-0.0	0.0

404	SX (RS)	0.000	0.000	0.000	0.0	0.0	0.0
	SY (RS)	0.000	0.000	0.000	0.0	0.0	0.0
RC ENV~1	Max	0.000	0.000	-0.002	0.0	-0.0	0.0
	Min	-0.000	-0.000	-0.004	-0.0	-0.0	0.0
RC ENV~2	Max	0.000	-0.000	-0.002	-0.0	-0.0	0.0
	Min	-0.000	-0.000	-0.003	-0.0	-0.0	0.0
405	SX (RS)	0.000	0.000	0.000	0.0	0.0	0.0
	SY (RS)	0.000	0.000	0.000	0.0	0.0	0.0
RC ENV~1	Max	0.000	0.000	-0.002	0.0	0.0	0.0
	Min	-0.000	-0.000	-0.004	-0.0	-0.0	0.0
RC ENV~2	Max	0.000	-0.000	-0.002	-0.0	-0.0	0.0
	Min	-0.000	-0.000	-0.003	-0.0	-0.0	0.0
406	SX (RS)	0.000	0.000	0.000	0.0	0.0	0.0
	SY (RS)	0.000	0.000	0.000	0.0	0.0	0.0
RC ENV~1	Max	0.000	0.000	-0.002	0.0	0.0	0.0
	Min	-0.000	-0.000	-0.004	-0.0	-0.0	0.0
RC ENV~2	Max	0.000	-0.000	-0.002	-0.0	0.0	0.0
	Min	-0.000	-0.000	-0.003	-0.0	-0.0	0.0
407	SX (RS)	0.000	0.000	0.000	0.0	0.0	0.0
	SY (RS)	0.000	0.000	0.000	0.0	0.0	0.0
RC ENV~1	Max	0.000	0.000	-0.002	0.0	0.0	0.0
	Min	-0.000	-0.000	-0.004	-0.0	-0.0	0.0
RC ENV~2	Max	0.000	-0.000	-0.002	-0.0	0.0	0.0
	Min	-0.000	-0.000	-0.003	-0.0	0.0	0.0
408	SX (RS)	0.000	0.000	0.000	0.0	0.0	0.0
	SY (RS)	0.000	0.000	0.000	0.0	0.0	0.0
RC ENV~1	Max	0.000	0.000	-0.002	0.0	0.0	0.0
	Min	-0.000	-0.000	-0.004	-0.0	-0.0	0.0
RC ENV~2	Max	0.000	-0.000	-0.002	-0.0	0.0	0.0
	Min	-0.000	-0.000	-0.003	-0.0	-0.0	0.0
409	SX (RS)	0.000	0.000	0.000	0.0	0.0	0.0
	SY (RS)	0.000	0.000	0.000	0.0	0.0	0.0
RC ENV~1	Max	0.000	0.000	-0.003	0.0	-0.0	0.0
	Min	-0.000	-0.000	-0.004	-0.0	-0.0	0.0
RC ENV~2	Max	0.000	-0.000	-0.003	-0.0	-0.0	0.0
	Min	-0.000	-0.000	-0.003	-0.0	-0.0	0.0
410	SX (RS)	0.000	0.000	0.000	0.0	0.0	0.0
	SY (RS)	0.000	0.000	0.000	0.0	0.0	0.0
RC ENV~1	Max	0.000	0.000	-0.002	0.0	-0.0	0.0
	Min	-0.000	-0.000	-0.004	-0.0	-0.0	0.0
RC ENV~2	Max	0.000	-0.000	-0.003	-0.0	-0.0	0.0
	Min	-0.000	-0.000	-0.003	-0.0	-0.0	0.0
411	SX (RS)	0.000	0.000	0.000	0.0	0.0	0.0
	SY (RS)	0.000	0.000	0.000	0.0	0.0	0.0
RC ENV~1	Max	0.000	0.000	-0.002	0.0	-0.0	0.0
	Min	-0.000	-0.000	-0.004	-0.0	-0.0	0.0
RC ENV~2	Max	0.000	-0.000	-0.003	-0.0	-0.0	0.0
	Min	-0.000	-0.000	-0.003	-0.0	-0.0	0.0
412	SX (RS)	0.000	0.000	0.000	0.0	0.0	0.0
	SY (RS)	0.000	0.000	0.000	0.0	0.0	0.0
RC ENV~1	Max	0.000	0.000	-0.002	0.0	-0.0	0.0
	Min	-0.000	-0.000	-0.004	-0.0	-0.0	0.0
RC ENV~2	Max	0.000	-0.000	-0.002	-0.0	-0.0	0.0

	Min	-0.000	-0.000	-0.003	-0.0	-0.0	0.0
413	SX (RS)	0.000	0.000	0.000	0.0	0.0	0.0
	SY (RS)	0.000	0.000	0.000	0.0	0.0	0.0
RC ENV~1	Max	0.000	0.000	-0.002	0.0	-0.0	0.0
	Min	-0.000	-0.000	-0.004	-0.0	-0.0	0.0
RC ENV~2	Max	0.000	-0.000	-0.002	-0.0	-0.0	0.0
	Min	-0.000	-0.000	-0.003	-0.0	-0.0	0.0
414	SX (RS)	0.000	0.000	0.000	0.0	0.0	0.0
	SY (RS)	0.000	0.000	0.000	0.0	0.0	0.0
RC ENV~1	Max	0.000	0.000	-0.002	0.0	0.0	0.0
	Min	-0.000	-0.000	-0.004	-0.0	-0.0	0.0
RC ENV~2	Max	0.000	-0.000	-0.002	-0.0	0.0	0.0
	Min	-0.000	-0.000	-0.003	-0.0	-0.0	0.0
415	SX (RS)	0.000	0.000	0.000	0.0	0.0	0.0
	SY (RS)	0.000	0.000	0.000	0.0	0.0	0.0
RC ENV~1	Max	0.000	0.000	-0.002	0.0	0.0	0.0
	Min	-0.000	-0.000	-0.004	-0.0	-0.0	0.0
RC ENV~2	Max	0.000	-0.000	-0.002	-0.0	0.0	0.0
	Min	-0.000	-0.000	-0.003	-0.0	-0.0	0.0
416	SX (RS)	0.000	0.000	0.000	0.0	0.0	0.0
	SY (RS)	0.000	0.000	0.000	0.0	0.0	0.0
RC ENV~1	Max	0.000	0.000	-0.002	0.0	0.0	0.0
	Min	-0.000	-0.000	-0.004	-0.0	-0.0	0.0
RC ENV~2	Max	0.000	-0.000	-0.002	-0.0	0.0	0.0
	Min	-0.000	-0.000	-0.003	-0.0	-0.0	0.0
417	SX (RS)	0.000	0.000	0.000	0.0	0.0	0.0
	SY (RS)	0.000	0.000	0.000	0.0	0.0	0.0
RC ENV~1	Max	0.000	0.000	-0.003	0.0	-0.0	0.0
	Min	-0.000	-0.000	-0.004	-0.0	-0.0	0.0
RC ENV~2	Max	0.000	-0.000	-0.003	-0.0	-0.0	0.0
	Min	-0.000	-0.000	-0.003	-0.0	-0.0	0.0
418	SX (RS)	0.000	0.000	0.000	0.0	0.0	0.0
	SY (RS)	0.000	0.000	0.000	0.0	0.0	0.0
RC ENV~1	Max	0.000	0.000	-0.003	0.0	-0.0	0.0
	Min	-0.000	-0.000	-0.004	-0.0	-0.0	0.0
RC ENV~2	Max	0.000	-0.000	-0.003	-0.0	-0.0	0.0
	Min	-0.000	-0.000	-0.003	-0.0	-0.0	0.0
419	SX (RS)	0.000	0.000	0.000	0.0	0.0	0.0
	SY (RS)	0.000	0.000	0.000	0.0	0.0	0.0
RC ENV~1	Max	0.000	0.000	-0.002	0.0	-0.0	0.0
	Min	-0.000	-0.000	-0.004	-0.0	-0.0	0.0
RC ENV~2	Max	0.000	-0.000	-0.003	-0.0	-0.0	0.0
	Min	-0.000	-0.000	-0.003	-0.0	-0.0	0.0
420	SX (RS)	0.000	0.000	0.000	0.0	0.0	0.0
	SY (RS)	0.000	0.000	0.000	0.0	0.0	0.0
RC ENV~1	Max	0.000	0.000	-0.002	0.0	-0.0	0.0
	Min	-0.000	-0.000	-0.004	-0.0	-0.0	0.0
RC ENV~2	Max	0.000	-0.000	-0.003	-0.0	-0.0	0.0
	Min	-0.000	-0.000	-0.003	-0.0	-0.0	0.0
421	SX (RS)	0.000	0.000	0.000	0.0	0.0	0.0
	SY (RS)	0.000	0.000	0.000	0.0	0.0	0.0
RC ENV~1	Max	0.000	0.000	-0.002	0.0	-0.0	0.0
	Min	-0.000	-0.000	-0.004	-0.0	-0.0	0.0

	RC ENV~2	Max	0.000	-0.000	-0.002	-0.0	-0.0	0.0
		Min	-0.000	-0.000	-0.003	-0.0	-0.0	0.0
422	SX (RS)		0.000	0.000	0.000	0.0	0.0	0.0
	SY (RS)		0.000	0.000	0.000	0.0	0.0	0.0
	RC ENV~1	Max	0.000	0.000	-0.002	0.0	0.0	0.0
		Min	-0.000	-0.000	-0.004	-0.0	-0.0	0.0
	RC ENV~2	Max	0.000	-0.000	-0.002	-0.0	0.0	0.0
		Min	-0.000	-0.000	-0.003	-0.0	-0.0	0.0
423	SX (RS)		0.000	0.000	0.000	0.0	0.0	0.0
	SY (RS)		0.000	0.000	0.000	0.0	0.0	0.0
	RC ENV~1	Max	0.000	0.000	-0.002	0.0	0.0	0.0
		Min	-0.000	-0.000	-0.004	-0.0	-0.0	0.0
	RC ENV~2	Max	0.000	-0.000	-0.002	-0.0	0.0	0.0
		Min	-0.000	-0.000	-0.003	-0.0	-0.0	0.0
424	SX (RS)		0.000	0.000	0.000	0.0	0.0	0.0
	SY (RS)		0.000	0.000	0.000	0.0	0.0	0.0
	RC ENV~1	Max	0.000	0.000	-0.002	0.0	0.0	0.0
		Min	-0.000	-0.000	-0.004	-0.0	-0.0	0.0
	RC ENV~2	Max	0.000	-0.000	-0.002	-0.0	0.0	0.0
		Min	-0.000	-0.000	-0.003	-0.0	-0.0	0.0
425	SX (RS)		0.000	0.000	0.000	0.0	0.0	0.0
	SY (RS)		0.000	0.000	0.000	0.0	0.0	0.0
	RC ENV~1	Max	0.000	0.000	-0.003	-0.0	-0.0	0.0
		Min	-0.000	-0.000	-0.004	-0.0	-0.0	0.0
	RC ENV~2	Max	0.000	-0.000	-0.003	-0.0	-0.0	0.0
		Min	-0.000	-0.000	-0.003	-0.0	-0.0	0.0
426	SX (RS)		0.000	0.000	0.000	0.0	0.0	0.0
	SY (RS)		0.000	0.000	0.000	0.0	0.0	0.0
	RC ENV~1	Max	0.000	0.000	-0.003	0.0	-0.0	0.0
		Min	-0.000	-0.000	-0.004	-0.0	-0.0	0.0
	RC ENV~2	Max	0.000	-0.000	-0.003	-0.0	-0.0	0.0
		Min	-0.000	-0.000	-0.003	-0.0	-0.0	0.0
427	SX (RS)		0.000	0.000	0.000	0.0	0.0	0.0
	SY (RS)		0.000	0.000	0.000	0.0	0.0	0.0
	RC ENV~1	Max	0.000	0.000	-0.003	0.0	-0.0	0.0
		Min	-0.000	-0.000	-0.004	-0.0	-0.0	0.0
	RC ENV~2	Max	0.000	-0.000	-0.003	-0.0	-0.0	0.0
		Min	-0.000	-0.000	-0.003	-0.0	-0.0	0.0
428	SX (RS)		0.000	0.000	0.000	0.0	0.0	0.0
	SY (RS)		0.000	0.000	0.000	0.0	0.0	0.0
	RC ENV~1	Max	0.000	0.000	-0.002	0.0	-0.0	0.0
		Min	-0.000	-0.000	-0.004	-0.0	-0.0	0.0
	RC ENV~2	Max	0.000	-0.000	-0.003	-0.0	-0.0	0.0
		Min	-0.000	-0.000	-0.003	-0.0	-0.0	0.0
429	SX (RS)		0.000	0.000	0.000	0.0	0.0	0.0
	SY (RS)		0.000	0.000	0.000	0.0	0.0	0.0
	RC ENV~1	Max	0.000	0.000	-0.002	0.0	-0.0	0.0
		Min	-0.000	-0.000	-0.004	-0.0	-0.0	0.0
	RC ENV~2	Max	0.000	-0.000	-0.003	-0.0	-0.0	0.0
		Min	-0.000	-0.000	-0.003	-0.0	-0.0	0.0
430	SX (RS)		0.000	0.000	0.000	0.0	0.0	0.0
	SY (RS)		0.000	0.000	0.000	0.0	0.0	0.0

	RC ENV~1	Max	0.000	0.000	-0.002	0.0	0.0	0.0
		Min	-0.000	-0.000	-0.004	-0.0	-0.0	0.0
	RC ENV~2	Max	0.000	-0.000	-0.002	-0.0	0.0	0.0
		Min	-0.000	-0.000	-0.003	-0.0	-0.0	0.0
431	SX (RS)		0.000	0.000	0.000	0.0	0.0	0.0
	SY (RS)		0.000	0.000	0.000	0.0	0.0	0.0
	RC ENV~1	Max	0.000	0.000	-0.002	0.0	0.0	0.0
		Min	-0.000	-0.000	-0.004	-0.0	-0.0	0.0
	RC ENV~2	Max	0.000	-0.000	-0.002	-0.0	0.0	0.0
		Min	-0.000	-0.000	-0.003	-0.0	-0.0	0.0
432	SX (RS)		0.000	0.000	0.000	0.0	0.0	0.0
	SY (RS)		0.000	0.000	0.000	0.0	0.0	0.0
	RC ENV~1	Max	0.000	0.000	-0.002	0.0	0.0	0.0
		Min	-0.000	-0.000	-0.004	-0.0	-0.0	0.0
	RC ENV~2	Max	0.000	-0.000	-0.002	-0.0	0.0	0.0
		Min	-0.000	-0.000	-0.003	-0.0	-0.0	0.0
433	SX (RS)		0.000	0.000	0.000	0.0	0.0	0.0
	SY (RS)		0.000	0.000	0.000	0.0	0.0	0.0
	RC ENV~1	Max	0.000	0.000	-0.003	-0.0	-0.0	0.0
		Min	-0.000	-0.000	-0.004	-0.0	-0.0	0.0
	RC ENV~2	Max	0.000	-0.000	-0.003	-0.0	-0.0	0.0
		Min	-0.000	-0.000	-0.003	-0.0	-0.0	0.0
434	SX (RS)		0.000	0.000	0.000	0.0	0.0	0.0
	SY (RS)		0.000	0.000	0.000	0.0	0.0	0.0
	RC ENV~1	Max	0.000	0.000	-0.003	0.0	-0.0	0.0
		Min	-0.000	-0.000	-0.004	-0.0	-0.0	0.0
	RC ENV~2	Max	0.000	-0.000	-0.003	-0.0	-0.0	0.0
		Min	-0.000	-0.000	-0.003	-0.0	-0.0	0.0
435	SX (RS)		0.000	0.000	0.000	0.0	0.0	0.0
	SY (RS)		0.000	0.000	0.000	0.0	0.0	0.0
	RC ENV~1	Max	0.000	0.000	-0.003	0.0	-0.0	0.0
		Min	-0.000	-0.000	-0.004	-0.0	-0.0	0.0
	RC ENV~2	Max	0.000	-0.000	-0.003	-0.0	-0.0	0.0
		Min	-0.000	-0.000	-0.003	-0.0	-0.0	0.0
436	SX (RS)		0.000	0.000	0.000	0.0	0.0	0.0
	SY (RS)		0.000	0.000	0.000	0.0	0.0	0.0
	RC ENV~1	Max	0.000	0.000	-0.003	0.0	-0.0	0.0
		Min	-0.000	-0.000	-0.004	-0.0	-0.0	0.0
	RC ENV~2	Max	0.000	-0.000	-0.003	-0.0	-0.0	0.0
		Min	-0.000	-0.000	-0.003	-0.0	-0.0	0.0
437	SX (RS)		0.000	0.000	0.000	0.0	0.0	0.0
	SY (RS)		0.000	0.000	0.000	0.0	0.0	0.0
	RC ENV~1	Max	0.000	0.000	-0.002	0.0	-0.0	0.0
		Min	-0.000	-0.000	-0.004	-0.0	-0.0	0.0
	RC ENV~2	Max	0.000	-0.000	-0.003	-0.0	-0.0	0.0
		Min	-0.000	-0.000	-0.003	-0.0	-0.0	0.0
438	SX (RS)		0.000	0.000	0.000	0.0	0.0	0.0
	SY (RS)		0.000	0.000	0.000	0.0	0.0	0.0
	RC ENV~1	Max	0.000	0.000	-0.002	0.0	0.0	0.0
		Min	-0.000	-0.000	-0.004	-0.0	-0.0	0.0
	RC ENV~2	Max	0.000	-0.000	-0.003	-0.0	0.0	0.0
		Min	-0.000	-0.000	-0.003	-0.0	-0.0	0.0
439	SX (RS)		0.000	0.000	0.000	0.0	0.0	0.0

	SY (RS)	0.000	0.000	0.000	0.0	0.0	0.0
RC ENV~1	Max	0.000	0.000	-0.002	-0.0	0.0	0.0
	Min	-0.000	-0.000	-0.004	-0.0	-0.0	0.0
RC ENV~2	Max	0.000	-0.000	-0.003	-0.0	0.0	0.0
	Min	-0.000	-0.000	-0.003	-0.0	0.0	0.0
440	SX (RS)	0.000	0.000	0.000	0.0	0.0	0.0
	SY (RS)	0.000	0.000	0.000	0.0	0.0	0.0
RC ENV~1	Max	0.000	0.000	-0.002	-0.0	0.0	0.0
	Min	-0.000	-0.000	-0.004	-0.0	-0.0	0.0
RC ENV~2	Max	0.000	-0.000	-0.003	-0.0	0.0	0.0
	Min	-0.000	-0.000	-0.003	-0.0	0.0	0.0
441	SX (RS)	0.000	0.000	0.000	0.0	0.0	0.0
	SY (RS)	0.000	0.000	0.000	0.0	0.0	0.0
RC ENV~1	Max	0.000	0.000	-0.003	0.0	-0.0	0.0
	Min	-0.000	-0.000	-0.004	-0.0	-0.0	0.0
RC ENV~2	Max	0.000	-0.000	-0.003	0.0	-0.0	0.0
	Min	-0.000	-0.000	-0.003	-0.0	-0.0	0.0
442	SX (RS)	0.000	0.000	0.000	0.0	0.0	0.0
	SY (RS)	0.000	0.000	0.000	0.0	0.0	0.0
RC ENV~1	Max	0.000	0.000	-0.003	0.0	-0.0	0.0
	Min	-0.000	-0.000	-0.004	-0.0	-0.0	0.0
RC ENV~2	Max	0.000	-0.000	-0.003	0.0	-0.0	0.0
	Min	-0.000	-0.000	-0.003	-0.0	-0.0	0.0
443	SX (RS)	0.000	0.000	0.000	0.0	0.0	0.0
	SY (RS)	0.000	0.000	0.000	0.0	0.0	0.0
RC ENV~1	Max	0.000	0.000	-0.003	0.0	-0.0	0.0
	Min	-0.000	-0.000	-0.004	-0.0	-0.0	0.0
RC ENV~2	Max	0.000	-0.000	-0.003	0.0	-0.0	0.0
	Min	-0.000	-0.000	-0.003	-0.0	-0.0	0.0
444	SX (RS)	0.000	0.000	0.000	0.0	0.0	0.0
	SY (RS)	0.000	0.000	0.000	0.0	0.0	0.0
RC ENV~1	Max	0.000	0.000	-0.003	0.0	-0.0	0.0
	Min	-0.000	-0.000	-0.004	-0.0	-0.0	0.0
RC ENV~2	Max	0.000	-0.000	-0.003	0.0	-0.0	0.0
	Min	-0.000	-0.000	-0.003	-0.0	-0.0	0.0
445	SX (RS)	0.000	0.000	0.000	0.0	0.0	0.0
	SY (RS)	0.000	0.000	0.000	0.0	0.0	0.0
RC ENV~1	Max	0.000	0.000	-0.002	0.0	0.0	0.0
	Min	-0.000	-0.000	-0.004	-0.0	-0.0	0.0
RC ENV~2	Max	0.000	-0.000	-0.003	-0.0	0.0	0.0
	Min	-0.000	-0.000	-0.003	-0.0	-0.0	0.0
446	SX (RS)	0.000	0.000	0.000	0.0	0.0	0.0
	SY (RS)	0.000	0.000	0.000	0.0	0.0	0.0
RC ENV~1	Max	0.000	0.000	-0.002	0.0	0.0	0.0
	Min	-0.000	-0.000	-0.004	-0.0	-0.0	0.0
RC ENV~2	Max	0.000	-0.000	-0.003	-0.0	0.0	0.0
	Min	-0.000	-0.000	-0.003	-0.0	-0.0	0.0
447	SX (RS)	0.000	0.000	0.000	0.0	0.0	0.0
	SY (RS)	0.000	0.000	0.000	0.0	0.0	0.0
RC ENV~1	Max	0.000	0.000	-0.002	0.0	0.0	0.0
	Min	-0.000	-0.000	-0.004	-0.0	-0.0	0.0
RC ENV~2	Max	0.000	-0.000	-0.003	-0.0	0.0	0.0
	Min	-0.000	-0.000	-0.003	-0.0	0.0	0.0

448	SX (RS)	0.000	0.000	0.000	0.0	0.0	0.0
	SY (RS)	0.000	0.000	0.000	0.0	0.0	0.0
RC ENV~1	Max	0.000	0.000	-0.003	0.0	0.0	0.0
	Min	-0.000	-0.000	-0.004	-0.0	-0.0	0.0
RC ENV~2	Max	0.000	-0.000	-0.003	-0.0	0.0	0.0
	Min	-0.000	-0.000	-0.003	-0.0	0.0	0.0
449	SX (RS)	0.000	0.000	0.000	0.0	0.0	0.0
	SY (RS)	0.000	0.000	0.000	0.0	0.0	0.0
RC ENV~1	Max	0.000	0.000	-0.003	0.0	-0.0	0.0
	Min	-0.000	-0.000	-0.004	-0.0	-0.0	0.0
RC ENV~2	Max	0.000	-0.000	-0.003	0.0	-0.0	0.0
	Min	-0.000	-0.000	-0.003	0.0	-0.0	0.0
450	SX (RS)	0.000	0.000	0.000	0.0	0.0	0.0
	SY (RS)	0.000	0.000	0.000	0.0	0.0	0.0
RC ENV~1	Max	0.000	0.000	-0.003	0.0	-0.0	0.0
	Min	-0.000	-0.000	-0.004	-0.0	-0.0	0.0
RC ENV~2	Max	0.000	-0.000	-0.003	0.0	-0.0	0.0
	Min	-0.000	-0.000	-0.003	0.0	-0.0	0.0
451	SX (RS)	0.000	0.000	0.000	0.0	0.0	0.0
	SY (RS)	0.000	0.000	0.000	0.0	0.0	0.0
RC ENV~1	Max	0.000	0.000	-0.003	0.0	-0.0	0.0
	Min	-0.000	-0.000	-0.004	-0.0	-0.0	0.0
RC ENV~2	Max	0.000	-0.000	-0.003	0.0	-0.0	0.0
	Min	-0.000	-0.000	-0.003	-0.0	-0.0	0.0
452	SX (RS)	0.000	0.000	0.000	0.0	0.0	0.0
	SY (RS)	0.000	0.000	0.000	0.0	0.0	0.0
RC ENV~1	Max	0.000	0.000	-0.003	0.0	-0.0	0.0
	Min	-0.000	-0.000	-0.004	-0.0	-0.0	0.0
RC ENV~2	Max	0.000	-0.000	-0.003	0.0	-0.0	0.0
	Min	-0.000	-0.000	-0.003	-0.0	-0.0	0.0
453	SX (RS)	0.000	0.000	0.000	0.0	0.0	0.0
	SY (RS)	0.000	0.000	0.000	0.0	0.0	0.0
RC ENV~1	Max	0.000	0.000	-0.002	0.0	0.0	0.0
	Min	-0.000	-0.000	-0.004	-0.0	-0.0	0.0
RC ENV~2	Max	0.000	-0.000	-0.003	0.0	0.0	0.0
	Min	-0.000	-0.000	-0.003	-0.0	-0.0	0.0
454	SX (RS)	0.000	0.000	0.000	0.0	0.0	0.0
	SY (RS)	0.000	0.000	0.000	0.0	0.0	0.0
RC ENV~1	Max	0.000	0.000	-0.002	0.0	0.0	0.0
	Min	-0.000	-0.000	-0.004	-0.0	-0.0	0.0
RC ENV~2	Max	0.000	-0.000	-0.003	0.0	0.0	0.0
	Min	-0.000	-0.000	-0.003	-0.0	0.0	0.0
455	SX (RS)	0.000	0.000	0.000	0.0	0.0	0.0
	SY (RS)	0.000	0.000	0.000	0.0	0.0	0.0
RC ENV~1	Max	0.000	0.000	-0.003	0.0	0.0	0.0
	Min	-0.000	-0.000	-0.004	-0.0	-0.0	0.0
RC ENV~2	Max	0.000	-0.000	-0.003	0.0	0.0	0.0
	Min	-0.000	-0.000	-0.003	-0.0	0.0	0.0
456	SX (RS)	0.000	0.000	0.000	0.0	0.0	0.0
	SY (RS)	0.000	0.000	0.000	0.0	0.0	0.0
RC ENV~1	Max	0.000	0.000	-0.002	0.0	0.0	0.0
	Min	-0.000	-0.000	-0.004	-0.0	-0.0	0.0

	RC ENV~2	Max	0.000	-0.000	-0.002	-0.0	-0.0	0.0
		Min	-0.000	-0.000	-0.003	-0.0	-0.0	0.0
457	SX (RS)		0.000	0.000	0.000	0.0	0.0	0.0
	SY (RS)		0.000	0.000	0.000	0.0	0.0	0.0
	RC ENV~1	Max	0.000	0.000	-0.002	0.0	0.0	0.0
		Min	-0.000	-0.000	-0.004	-0.0	-0.0	0.0
	RC ENV~2	Max	0.000	-0.000	-0.002	-0.0	0.0	0.0
		Min	-0.000	-0.000	-0.003	-0.0	-0.0	0.0
458	SX (RS)		0.000	0.000	0.000	0.0	0.0	0.0
	SY (RS)		0.000	0.000	0.000	0.0	0.0	0.0
	RC ENV~1	Max	0.000	0.000	-0.002	0.0	0.0	0.0
		Min	-0.000	-0.000	-0.004	-0.0	-0.0	0.0
	RC ENV~2	Max	0.000	-0.000	-0.002	-0.0	0.0	0.0
		Min	-0.000	-0.000	-0.003	-0.0	0.0	0.0
459	SX (RS)		0.000	0.000	0.000	0.0	0.0	0.0
	SY (RS)		0.000	0.000	0.000	0.0	0.0	0.0
	RC ENV~1	Max	0.000	0.000	-0.002	0.0	0.0	0.0
		Min	-0.000	-0.000	-0.004	-0.0	0.0	0.0
	RC ENV~2	Max	0.000	-0.000	-0.002	-0.0	0.0	0.0
		Min	-0.000	-0.000	-0.003	-0.0	0.0	0.0
460	SX (RS)		0.000	0.000	0.000	0.0	0.0	0.0
	SY (RS)		0.000	0.000	0.000	0.0	0.0	0.0
	RC ENV~1	Max	0.000	0.000	-0.002	0.0	0.0	0.0
		Min	-0.000	-0.000	-0.004	-0.0	0.0	0.0
	RC ENV~2	Max	0.000	-0.000	-0.003	-0.0	0.0	0.0
		Min	-0.000	-0.000	-0.003	-0.0	0.0	0.0
461	SX (RS)		0.000	0.000	0.000	0.0	0.0	0.0
	SY (RS)		0.000	0.000	0.000	0.0	0.0	0.0
	RC ENV~1	Max	0.000	0.000	-0.002	0.0	0.0	0.0
		Min	-0.000	-0.000	-0.004	-0.0	0.0	0.0
	RC ENV~2	Max	0.000	-0.000	-0.003	-0.0	0.0	0.0
		Min	-0.000	-0.000	-0.003	-0.0	0.0	0.0
462	SX (RS)		0.000	0.000	0.000	0.0	0.0	0.0
	SY (RS)		0.000	0.000	0.000	0.0	0.0	0.0
	RC ENV~1	Max	0.000	0.000	-0.002	0.0	0.0	0.0
		Min	-0.000	-0.000	-0.004	-0.0	0.0	0.0
	RC ENV~2	Max	0.000	-0.000	-0.003	-0.0	0.0	0.0
		Min	-0.000	-0.000	-0.003	-0.0	0.0	0.0
463	SX (RS)		0.000	0.000	0.000	0.0	0.0	0.0
	SY (RS)		0.000	0.000	0.000	0.0	0.0	0.0
	RC ENV~1	Max	0.000	0.000	-0.002	0.0	0.0	0.0
		Min	-0.000	-0.000	-0.004	-0.0	-0.0	0.0
	RC ENV~2	Max	0.000	-0.000	-0.002	-0.0	0.0	0.0
		Min	-0.000	-0.000	-0.003	-0.0	-0.0	0.0
464	SX (RS)		0.000	0.000	0.000	0.0	0.0	0.0
	SY (RS)		0.000	0.000	0.000	0.0	0.0	0.0
	RC ENV~1	Max	0.000	0.000	-0.002	0.0	0.0	0.0
		Min	-0.000	-0.000	-0.004	-0.0	-0.0	0.0
	RC ENV~2	Max	0.000	-0.000	-0.002	-0.0	0.0	0.0
		Min	-0.000	-0.000	-0.003	-0.0	-0.0	0.0
465	SX (RS)		0.000	0.000	0.000	0.0	0.0	0.0
	SY (RS)		0.000	0.000	0.000	0.0	0.0	0.0
	RC ENV~1	Max	0.000	0.000	-0.002	0.0	0.0	0.0

	Min	-0.000	-0.000	-0.004	-0.0	0.0	0.0
RC ENV~2	Max	0.000	-0.000	-0.002	-0.0	0.0	0.0
	Min	-0.000	-0.000	-0.003	-0.0	0.0	0.0
466	SX (RS)	0.000	0.000	0.000	0.0	0.0	0.0
	SY (RS)	0.000	0.000	0.000	0.0	0.0	0.0
RC ENV~1	Max	0.000	0.000	-0.002	0.0	0.0	0.0
	Min	-0.000	-0.000	-0.004	-0.0	0.0	0.0
RC ENV~2	Max	0.000	-0.000	-0.003	-0.0	0.0	0.0
	Min	-0.000	-0.000	-0.003	-0.0	0.0	0.0
467	SX (RS)	0.000	0.000	0.000	0.0	0.0	0.0
	SY (RS)	0.000	0.000	0.000	0.0	0.0	0.0
RC ENV~1	Max	0.000	0.000	-0.002	0.0	0.0	0.0
	Min	-0.000	-0.000	-0.004	-0.0	0.0	0.0
RC ENV~2	Max	0.000	-0.000	-0.003	-0.0	0.0	0.0
	Min	-0.000	-0.000	-0.003	-0.0	0.0	0.0
468	SX (RS)	0.000	0.000	0.000	0.0	0.0	0.0
	SY (RS)	0.000	0.000	0.000	0.0	0.0	0.0
RC ENV~1	Max	0.000	0.000	-0.003	0.0	0.0	0.0
	Min	-0.000	-0.000	-0.004	-0.0	0.0	0.0
RC ENV~2	Max	0.000	-0.000	-0.003	-0.0	0.0	0.0
	Min	-0.000	-0.000	-0.003	-0.0	0.0	0.0
469	SX (RS)	0.000	0.000	0.000	0.0	0.0	0.0
	SY (RS)	0.000	0.000	0.000	0.0	0.0	0.0
RC ENV~1	Max	0.000	0.000	-0.003	0.0	0.0	0.0
	Min	-0.000	-0.000	-0.004	-0.0	0.0	0.0
RC ENV~2	Max	0.000	-0.000	-0.003	-0.0	0.0	0.0
	Min	-0.000	-0.000	-0.003	-0.0	0.0	0.0
470	SX (RS)	0.000	0.000	0.000	0.0	0.0	0.0
	SY (RS)	0.000	0.000	0.000	0.0	0.0	0.0
RC ENV~1	Max	0.000	0.000	-0.002	0.0	0.0	0.0
	Min	-0.000	-0.000	-0.004	-0.0	-0.0	0.0
RC ENV~2	Max	0.000	-0.000	-0.002	-0.0	0.0	0.0
	Min	-0.000	-0.000	-0.003	-0.0	-0.0	0.0
471	SX (RS)	0.000	0.000	0.000	0.0	0.0	0.0
	SY (RS)	0.000	0.000	0.000	0.0	0.0	0.0
RC ENV~1	Max	0.000	0.000	-0.002	0.0	0.0	0.0
	Min	-0.000	-0.000	-0.004	-0.0	-0.0	0.0
RC ENV~2	Max	0.000	-0.000	-0.002	-0.0	0.0	0.0
	Min	-0.000	-0.000	-0.003	-0.0	-0.0	0.0
472	SX (RS)	0.000	0.000	0.000	0.0	0.0	0.0
	SY (RS)	0.000	0.000	0.000	0.0	0.0	0.0
RC ENV~1	Max	0.000	0.000	-0.002	0.0	0.0	0.0
	Min	-0.000	-0.000	-0.004	-0.0	0.0	0.0
RC ENV~2	Max	0.000	-0.000	-0.003	-0.0	0.0	0.0
	Min	-0.000	-0.000	-0.003	-0.0	0.0	0.0
473	SX (RS)	0.000	0.000	0.000	0.0	0.0	0.0
	SY (RS)	0.000	0.000	0.000	0.0	0.0	0.0
RC ENV~1	Max	0.000	0.000	-0.002	0.0	0.0	0.0
	Min	-0.000	-0.000	-0.004	-0.0	0.0	0.0
RC ENV~2	Max	0.000	-0.000	-0.003	-0.0	0.0	0.0
	Min	-0.000	-0.000	-0.003	-0.0	0.0	0.0
474	SX (RS)	0.000	0.000	0.000	0.0	0.0	0.0
	SY (RS)	0.000	0.000	0.000	0.0	0.0	0.0

	RC ENV~1	Max	0.000	0.000	-0.002	-0.0	0.0	0.0
		Min	-0.000	-0.000	-0.004	-0.0	0.0	0.0
	RC ENV~2	Max	0.000	-0.000	-0.003	-0.0	0.0	0.0
		Min	-0.000	-0.000	-0.003	-0.0	0.0	0.0
475	SX (RS)		0.000	0.000	0.000	0.0	0.0	0.0
	SY (RS)		0.000	0.000	0.000	0.0	0.0	0.0
	RC ENV~1	Max	0.000	0.000	-0.003	-0.0	0.0	0.0
		Min	-0.000	-0.000	-0.004	-0.0	0.0	0.0
	RC ENV~2	Max	0.000	-0.000	-0.003	-0.0	0.0	0.0
		Min	-0.000	-0.000	-0.003	-0.0	0.0	0.0
476	SX (RS)		0.000	0.000	0.000	0.0	0.0	0.0
	SY (RS)		0.000	0.000	0.000	0.0	0.0	0.0
	RC ENV~1	Max	0.000	0.000	-0.003	-0.0	0.0	0.0
		Min	-0.000	-0.000	-0.004	-0.0	0.0	0.0
	RC ENV~2	Max	0.000	-0.000	-0.003	-0.0	0.0	0.0
		Min	-0.000	-0.000	-0.003	-0.0	0.0	0.0
477	SX (RS)		0.000	0.000	0.000	0.0	0.0	0.0
	SY (RS)		0.000	0.000	0.000	0.0	0.0	0.0
	RC ENV~1	Max	0.000	0.000	-0.002	0.0	0.0	0.0
		Min	-0.000	-0.000	-0.004	-0.0	-0.0	0.0
	RC ENV~2	Max	0.000	-0.000	-0.003	-0.0	0.0	0.0
		Min	-0.000	-0.000	-0.003	-0.0	-0.0	0.0
478	SX (RS)		0.000	0.000	0.000	0.0	0.0	0.0
	SY (RS)		0.000	0.000	0.000	0.0	0.0	0.0
	RC ENV~1	Max	0.000	0.000	-0.002	0.0	0.0	0.0
		Min	-0.000	-0.000	-0.004	-0.0	-0.0	0.0
	RC ENV~2	Max	0.000	-0.000	-0.003	-0.0	0.0	0.0
		Min	-0.000	-0.000	-0.003	-0.0	-0.0	0.0
479	SX (RS)		0.000	0.000	0.000	0.0	0.0	0.0
	SY (RS)		0.000	0.000	0.000	0.0	0.0	0.0
	RC ENV~1	Max	0.000	0.000	-0.002	0.0	0.0	0.0
		Min	-0.000	-0.000	-0.004	-0.0	0.0	0.0
	RC ENV~2	Max	0.000	-0.000	-0.003	-0.0	0.0	0.0
		Min	-0.000	-0.000	-0.003	-0.0	0.0	0.0
480	SX (RS)		0.000	0.000	0.000	0.0	0.0	0.0
	SY (RS)		0.000	0.000	0.000	0.0	0.0	0.0
	RC ENV~1	Max	0.000	0.000	-0.002	-0.0	0.0	0.0
		Min	-0.000	-0.000	-0.004	-0.0	0.0	0.0
	RC ENV~2	Max	0.000	-0.000	-0.003	-0.0	0.0	0.0
		Min	-0.000	-0.000	-0.003	-0.0	0.0	0.0
481	SX (RS)		0.000	0.000	0.000	0.0	0.0	0.0
	SY (RS)		0.000	0.000	0.000	0.0	0.0	0.0
	RC ENV~1	Max	0.000	0.000	-0.003	-0.0	0.0	0.0
		Min	-0.000	-0.000	-0.004	-0.0	0.0	0.0
	RC ENV~2	Max	0.000	-0.000	-0.003	-0.0	0.0	0.0
		Min	-0.000	-0.000	-0.003	-0.0	0.0	0.0
482	SX (RS)		0.000	0.000	0.000	0.0	0.0	0.0
	SY (RS)		0.000	0.000	0.000	0.0	0.0	0.0
	RC ENV~1	Max	0.000	0.000	-0.003	-0.0	0.0	0.0
		Min	-0.000	-0.000	-0.004	-0.0	0.0	0.0
	RC ENV~2	Max	0.000	-0.000	-0.003	-0.0	0.0	0.0
		Min	-0.000	-0.000	-0.003	-0.0	0.0	0.0

483	SX (RS)	0.000	0.000	0.000	0.0	0.0	0.0
	SY (RS)	0.000	0.000	0.000	0.0	0.0	0.0
RC ENV~1	Max	0.000	0.000	-0.003	-0.0	0.0	0.0
	Min	-0.000	-0.000	-0.004	-0.0	0.0	0.0
RC ENV~2	Max	0.000	-0.000	-0.003	-0.0	0.0	0.0
	Min	-0.000	-0.000	-0.003	-0.0	0.0	0.0
484	SX (RS)	0.000	0.000	0.000	0.0	0.0	0.0
	SY (RS)	0.000	0.000	0.000	0.0	0.0	0.0
RC ENV~1	Max	0.000	0.000	-0.002	-0.0	0.0	0.0
	Min	-0.000	-0.000	-0.004	-0.0	-0.0	0.0
RC ENV~2	Max	0.000	-0.000	-0.003	-0.0	0.0	0.0
	Min	-0.000	-0.000	-0.003	-0.0	-0.0	0.0
485	SX (RS)	0.000	0.000	0.000	0.0	0.0	0.0
	SY (RS)	0.000	0.000	0.000	0.0	0.0	0.0
RC ENV~1	Max	0.000	0.000	-0.002	0.0	0.0	0.0
	Min	-0.000	-0.000	-0.004	-0.0	-0.0	0.0
RC ENV~2	Max	0.000	-0.000	-0.003	-0.0	0.0	0.0
	Min	-0.000	-0.000	-0.003	-0.0	-0.0	0.0
486	SX (RS)	0.000	0.000	0.000	0.0	0.0	0.0
	SY (RS)	0.000	0.000	0.000	0.0	0.0	0.0
RC ENV~1	Max	0.000	0.000	-0.002	0.0	0.0	0.0
	Min	-0.000	-0.000	-0.004	-0.0	0.0	0.0
RC ENV~2	Max	0.000	-0.000	-0.003	-0.0	0.0	0.0
	Min	-0.000	-0.000	-0.003	-0.0	0.0	0.0
487	SX (RS)	0.000	0.000	0.000	0.0	0.0	0.0
	SY (RS)	0.000	0.000	0.000	0.0	0.0	0.0
RC ENV~1	Max	0.000	0.000	-0.003	-0.0	0.0	0.0
	Min	-0.000	-0.000	-0.004	-0.0	0.0	0.0
RC ENV~2	Max	0.000	-0.000	-0.003	-0.0	0.0	0.0
	Min	-0.000	-0.000	-0.003	-0.0	0.0	0.0
488	SX (RS)	0.000	0.000	0.000	0.0	0.0	0.0
	SY (RS)	0.000	0.000	0.000	0.0	0.0	0.0
RC ENV~1	Max	0.000	0.000	-0.003	-0.0	0.0	0.0
	Min	-0.000	-0.000	-0.004	-0.0	0.0	0.0
RC ENV~2	Max	0.000	-0.000	-0.003	-0.0	0.0	0.0
	Min	-0.000	-0.000	-0.003	-0.0	0.0	0.0
489	SX (RS)	0.000	0.000	0.000	0.0	0.0	0.0
	SY (RS)	0.000	0.000	0.000	0.0	0.0	0.0
RC ENV~1	Max	0.000	0.000	-0.003	-0.0	0.0	0.0
	Min	-0.000	-0.000	-0.004	-0.0	0.0	0.0
RC ENV~2	Max	0.000	-0.000	-0.003	-0.0	0.0	0.0
	Min	-0.000	-0.000	-0.003	-0.0	0.0	0.0
490	SX (RS)	0.000	0.000	0.000	0.0	0.0	0.0
	SY (RS)	0.000	0.000	0.000	0.0	0.0	0.0
RC ENV~1	Max	0.000	0.000	-0.003	-0.0	0.0	0.0
	Min	-0.000	-0.000	-0.004	-0.0	0.0	0.0
RC ENV~2	Max	0.000	-0.000	-0.003	-0.0	0.0	0.0
	Min	-0.000	-0.000	-0.003	-0.0	0.0	0.0
491	SX (RS)	0.000	0.000	0.000	0.0	0.0	0.0
	SY (RS)	0.000	0.000	0.000	0.0	0.0	0.0
RC ENV~1	Max	0.000	0.000	-0.003	0.0	0.0	0.0
	Min	-0.000	-0.000	-0.004	-0.0	-0.0	0.0
RC ENV~2	Max	0.000	-0.000	-0.003	-0.0	0.0	0.0

	Min	-0.000	-0.000	-0.003	-0.0	-0.0	0.0
492	SX (RS)	0.000	0.000	0.000	0.0	0.0	0.0
	SY (RS)	0.000	0.000	0.000	0.0	0.0	0.0
RC ENV~1	Max	0.000	0.000	-0.003	0.0	0.0	0.0
	Min	-0.000	-0.000	-0.004	-0.0	-0.0	0.0
RC ENV~2	Max	0.000	-0.000	-0.003	-0.0	0.0	0.0
	Min	-0.000	-0.000	-0.003	-0.0	-0.0	0.0
493	SX (RS)	0.000	0.000	0.000	0.0	0.0	0.0
	SY (RS)	0.000	0.000	0.000	0.0	0.0	0.0
RC ENV~1	Max	0.000	0.000	-0.003	0.0	0.0	0.0
	Min	-0.000	-0.000	-0.004	-0.0	0.0	0.0
RC ENV~2	Max	0.000	-0.000	-0.003	-0.0	0.0	0.0
	Min	-0.000	-0.000	-0.003	-0.0	0.0	0.0
494	SX (RS)	0.000	0.000	0.000	0.0	0.0	0.0
	SY (RS)	0.000	0.000	0.000	0.0	0.0	0.0
RC ENV~1	Max	0.000	0.000	-0.003	0.0	0.0	0.0
	Min	-0.000	-0.000	-0.004	-0.0	0.0	0.0
RC ENV~2	Max	0.000	-0.000	-0.003	-0.0	0.0	0.0
	Min	-0.000	-0.000	-0.003	-0.0	0.0	0.0
495	SX (RS)	0.000	0.000	0.000	0.0	0.0	0.0
	SY (RS)	0.000	0.000	0.000	0.0	0.0	0.0
RC ENV~1	Max	0.000	0.000	-0.003	-0.0	0.0	0.0
	Min	-0.000	-0.000	-0.004	-0.0	0.0	0.0
RC ENV~2	Max	0.000	-0.000	-0.003	-0.0	0.0	0.0
	Min	-0.000	-0.000	-0.003	-0.0	0.0	0.0
496	SX (RS)	0.000	0.000	0.000	0.0	0.0	0.0
	SY (RS)	0.000	0.000	0.000	0.0	0.0	0.0
RC ENV~1	Max	0.000	0.000	-0.003	-0.0	0.0	0.0
	Min	-0.000	-0.000	-0.004	-0.0	0.0	0.0
RC ENV~2	Max	0.000	-0.000	-0.003	-0.0	0.0	0.0
	Min	-0.000	-0.000	-0.003	-0.0	0.0	0.0
497	SX (RS)	0.000	0.000	0.000	0.0	0.0	0.0
	SY (RS)	0.000	0.000	0.000	0.0	0.0	0.0
RC ENV~1	Max	0.000	0.000	-0.003	-0.0	0.0	0.0
	Min	-0.000	-0.000	-0.004	-0.0	0.0	0.0
RC ENV~2	Max	0.000	-0.000	-0.003	-0.0	0.0	0.0
	Min	-0.000	-0.000	-0.003	-0.0	0.0	0.0
498	SX (RS)	0.000	0.000	0.000	0.0	0.0	0.0
	SY (RS)	0.000	0.000	0.000	0.0	0.0	0.0
RC ENV~1	Max	0.000	0.000	-0.003	0.0	0.0	0.0
	Min	-0.000	-0.000	-0.004	-0.0	-0.0	0.0
RC ENV~2	Max	0.000	-0.000	-0.003	-0.0	0.0	0.0
	Min	-0.000	-0.000	-0.003	-0.0	-0.0	0.0
499	SX (RS)	0.000	0.000	0.000	0.0	0.0	0.0
	SY (RS)	0.000	0.000	0.000	0.0	0.0	0.0
RC ENV~1	Max	0.000	0.000	-0.003	0.0	0.0	0.0
	Min	-0.000	-0.000	-0.004	-0.0	-0.0	0.0
RC ENV~2	Max	0.000	-0.000	-0.003	-0.0	0.0	0.0
	Min	-0.000	-0.000	-0.003	-0.0	-0.0	0.0
500	SX (RS)	0.000	0.000	0.000	0.0	0.0	0.0
	SY (RS)	0.000	0.000	0.000	0.0	0.0	0.0
RC ENV~1	Max	0.000	0.000	-0.003	0.0	0.0	0.0
	Min	-0.000	-0.000	-0.004	-0.0	0.0	0.0

	RC ENV~2	Max	0.000	-0.000	-0.003	-0.0	0.0	0.0
		Min	-0.000	-0.000	-0.003	-0.0	0.0	0.0
501	SX (RS)		0.000	0.000	0.000	0.0	0.0	0.0
	SY (RS)		0.000	0.000	0.000	0.0	0.0	0.0
	RC ENV~1	Max	0.000	0.000	-0.003	0.0	0.0	0.0
		Min	-0.000	-0.000	-0.004	-0.0	0.0	0.0
	RC ENV~2	Max	0.000	-0.000	-0.003	-0.0	0.0	0.0
		Min	-0.000	-0.000	-0.003	-0.0	0.0	0.0
502	SX (RS)		0.000	0.000	0.000	0.0	0.0	0.0
	SY (RS)		0.000	0.000	0.000	0.0	0.0	0.0
	RC ENV~1	Max	0.000	0.000	-0.003	0.0	0.0	0.0
		Min	-0.000	-0.000	-0.004	-0.0	0.0	0.0
	RC ENV~2	Max	0.000	-0.000	-0.003	-0.0	0.0	0.0
		Min	-0.000	-0.000	-0.003	-0.0	0.0	0.0
503	SX (RS)		0.000	0.000	0.000	0.0	0.0	0.0
	SY (RS)		0.000	0.000	0.000	0.0	0.0	0.0
	RC ENV~1	Max	0.000	0.000	-0.003	0.0	0.0	0.0
		Min	-0.000	-0.000	-0.004	-0.0	0.0	0.0
	RC ENV~2	Max	0.000	-0.000	-0.003	-0.0	0.0	0.0
		Min	-0.000	-0.000	-0.003	-0.0	0.0	0.0
504	SX (RS)		0.000	0.000	0.000	0.0	0.0	0.0
	SY (RS)		0.000	0.000	0.000	0.0	0.0	0.0
	RC ENV~1	Max	0.000	0.000	-0.003	-0.0	0.0	0.0
		Min	-0.000	-0.000	-0.004	-0.0	0.0	0.0
	RC ENV~2	Max	0.000	-0.000	-0.003	-0.0	0.0	0.0
		Min	-0.000	-0.000	-0.003	-0.0	0.0	0.0
505	SX (RS)		0.000	0.000	0.000	0.0	0.0	0.0
	SY (RS)		0.000	0.000	0.000	0.0	0.0	0.0
	RC ENV~1	Max	0.000	0.000	-0.003	0.0	-0.0	0.0
		Min	-0.000	-0.000	-0.004	0.0	-0.0	0.0
	RC ENV~2	Max	0.000	-0.000	-0.003	0.0	-0.0	0.0
		Min	-0.000	-0.000	-0.003	0.0	-0.0	0.0
506	SX (RS)		0.000	0.000	0.000	0.0	0.0	0.0
	SY (RS)		0.000	0.000	0.000	0.0	0.0	0.0
	RC ENV~1	Max	0.000	0.000	-0.003	0.0	-0.0	0.0
		Min	-0.000	-0.000	-0.004	0.0	-0.0	0.0
	RC ENV~2	Max	0.000	-0.000	-0.003	0.0	-0.0	0.0
		Min	-0.000	-0.000	-0.003	0.0	-0.0	0.0
507	SX (RS)		0.000	0.000	0.000	0.0	0.0	0.0
	SY (RS)		0.000	0.000	0.000	0.0	0.0	0.0
	RC ENV~1	Max	0.000	0.000	-0.003	0.0	-0.0	0.0
		Min	-0.000	-0.000	-0.004	0.0	-0.0	0.0
	RC ENV~2	Max	0.000	-0.000	-0.003	0.0	-0.0	0.0
		Min	-0.000	-0.000	-0.003	0.0	-0.0	0.0
508	SX (RS)		0.000	0.000	0.000	0.0	0.0	0.0
	SY (RS)		0.000	0.000	0.000	0.0	0.0	0.0
	RC ENV~1	Max	0.000	0.000	-0.002	0.0	-0.0	0.0
		Min	-0.000	-0.000	-0.004	0.0	-0.0	0.0
	RC ENV~2	Max	0.000	-0.000	-0.003	0.0	-0.0	0.0
		Min	-0.000	-0.000	-0.003	0.0	-0.0	0.0
509	SX (RS)		0.000	0.000	0.000	0.0	0.0	0.0
	SY (RS)		0.000	0.000	0.000	0.0	0.0	0.0

	RC ENV~1	Max	0.000	0.000	-0.002	0.0	0.0	0.0
		Min	-0.000	-0.000	-0.004	0.0	-0.0	0.0
	RC ENV~2	Max	0.000	-0.000	-0.003	0.0	0.0	0.0
		Min	-0.000	-0.000	-0.003	0.0	-0.0	0.0
510	SX (RS)		0.000	0.000	0.000	0.0	0.0	0.0
	SY (RS)		0.000	0.000	0.000	0.0	0.0	0.0
	RC ENV~1	Max	0.000	0.000	-0.002	0.0	0.0	0.0
		Min	-0.000	-0.000	-0.004	-0.0	-0.0	0.0
	RC ENV~2	Max	0.000	-0.000	-0.003	0.0	0.0	0.0
		Min	-0.000	-0.000	-0.003	0.0	0.0	0.0
511	SX (RS)		0.000	0.000	0.000	0.0	0.0	0.0
	SY (RS)		0.000	0.000	0.000	0.0	0.0	0.0
	RC ENV~1	Max	0.000	0.000	-0.002	0.0	0.0	0.0
		Min	-0.000	-0.000	-0.004	-0.0	-0.0	0.0
	RC ENV~2	Max	0.000	-0.000	-0.003	0.0	0.0	0.0
		Min	-0.000	-0.000	-0.003	0.0	0.0	0.0
512	SX (RS)		0.000	0.000	0.000	0.0	0.0	0.0
	SY (RS)		0.000	0.000	0.000	0.0	0.0	0.0
	RC ENV~1	Max	0.000	0.000	-0.003	0.0	0.0	0.0
		Min	-0.000	-0.000	-0.004	0.0	-0.0	0.0
	RC ENV~2	Max	0.000	-0.000	-0.003	0.0	0.0	0.0
		Min	-0.000	-0.000	-0.003	0.0	0.0	0.0
513	SX (RS)		0.000	0.000	0.000	0.0	0.0	0.0
	SY (RS)		0.000	0.000	0.000	0.0	0.0	0.0
	RC ENV~1	Max	0.000	0.000	-0.003	0.0	-0.0	0.0
		Min	-0.000	-0.000	-0.004	0.0	-0.0	0.0
	RC ENV~2	Max	0.000	-0.000	-0.003	0.0	-0.0	0.0
		Min	-0.000	-0.000	-0.003	0.0	-0.0	0.0
514	SX (RS)		0.000	0.000	0.000	0.0	0.0	0.0
	SY (RS)		0.000	0.000	0.000	0.0	0.0	0.0
	RC ENV~1	Max	0.000	0.000	-0.003	0.0	-0.0	0.0
		Min	-0.000	-0.000	-0.004	0.0	-0.0	0.0
	RC ENV~2	Max	0.000	-0.000	-0.003	0.0	-0.0	0.0
		Min	-0.000	-0.000	-0.003	0.0	-0.0	0.0
515	SX (RS)		0.000	0.000	0.000	0.0	0.0	0.0
	SY (RS)		0.000	0.000	0.000	0.0	0.0	0.0
	RC ENV~1	Max	0.000	0.000	-0.003	0.0	-0.0	0.0
		Min	-0.000	-0.000	-0.004	0.0	-0.0	0.0
	RC ENV~2	Max	0.000	-0.000	-0.003	0.0	-0.0	0.0
		Min	-0.000	-0.000	-0.003	0.0	-0.0	0.0
516	SX (RS)		0.000	0.000	0.000	0.0	0.0	0.0
	SY (RS)		0.000	0.000	0.000	0.0	0.0	0.0
	RC ENV~1	Max	0.000	0.000	-0.002	0.0	-0.0	0.0
		Min	-0.000	-0.000	-0.004	0.0	-0.0	0.0
	RC ENV~2	Max	0.000	-0.000	-0.003	0.0	-0.0	0.0
		Min	-0.000	-0.000	-0.003	0.0	-0.0	0.0
517	SX (RS)		0.000	0.000	0.000	0.0	0.0	0.0
	SY (RS)		0.000	0.000	0.000	0.0	0.0	0.0
	RC ENV~1	Max	0.000	0.000	-0.002	0.0	0.0	0.0
		Min	-0.000	-0.000	-0.004	0.0	-0.0	0.0
	RC ENV~2	Max	0.000	-0.000	-0.002	0.0	0.0	0.0
		Min	-0.000	-0.000	-0.003	0.0	-0.0	0.0
518	SX (RS)		0.000	0.000	0.000	0.0	0.0	0.0

	SY (RS)	0.000	0.000	0.000	0.0	0.0	0.0
	RC ENV~1 Max	0.000	0.000	-0.002	0.0	0.0	0.0
	Min	-0.000	-0.000	-0.004	0.0	-0.0	0.0
	RC ENV~2 Max	0.000	-0.000	-0.002	0.0	0.0	0.0
	Min	-0.000	-0.000	-0.003	0.0	-0.0	0.0
519	SX (RS)	0.000	0.000	0.000	0.0	0.0	0.0
	SY (RS)	0.000	0.000	0.000	0.0	0.0	0.0
	RC ENV~1 Max	0.000	0.000	-0.002	0.0	0.0	0.0
	Min	-0.000	-0.000	-0.004	0.0	-0.0	0.0
	RC ENV~2 Max	0.000	-0.000	-0.003	0.0	0.0	0.0
	Min	-0.000	-0.000	-0.003	0.0	0.0	0.0
520	SX (RS)	0.000	0.000	0.000	0.0	0.0	0.0
	SY (RS)	0.000	0.000	0.000	0.0	0.0	0.0
	RC ENV~1 Max	0.000	0.000	-0.003	0.0	0.0	0.0
	Min	-0.000	-0.000	-0.004	-0.0	-0.0	0.0
	RC ENV~2 Max	0.000	-0.000	-0.003	0.0	0.0	0.0
	Min	-0.000	-0.000	-0.003	0.0	0.0	0.0
521	SX (RS)	0.000	0.000	0.000	0.0	0.0	0.0
	SY (RS)	0.000	0.000	0.000	0.0	0.0	0.0
	RC ENV~1 Max	0.000	0.000	-0.003	0.0	-0.0	0.0
	Min	-0.000	-0.000	-0.004	0.0	-0.0	0.0
	RC ENV~2 Max	0.000	0.000	-0.003	0.0	-0.0	0.0
	Min	-0.000	-0.000	-0.003	0.0	-0.0	0.0
522	SX (RS)	0.000	0.000	0.000	0.0	0.0	0.0
	SY (RS)	0.000	0.000	0.000	0.0	0.0	0.0
	RC ENV~1 Max	0.000	0.000	-0.003	0.0	-0.0	0.0
	Min	-0.000	-0.000	-0.004	0.0	-0.0	0.0
	RC ENV~2 Max	0.000	0.000	-0.003	0.0	-0.0	0.0
	Min	-0.000	-0.000	-0.003	0.0	-0.0	0.0
523	SX (RS)	0.000	0.000	0.000	0.0	0.0	0.0
	SY (RS)	0.000	0.000	0.000	0.0	0.0	0.0
	RC ENV~1 Max	0.000	0.000	-0.002	0.0	-0.0	0.0
	Min	-0.000	-0.000	-0.004	0.0	-0.0	0.0
	RC ENV~2 Max	0.000	-0.000	-0.003	0.0	-0.0	0.0
	Min	-0.000	-0.000	-0.003	0.0	-0.0	0.0
524	SX (RS)	0.000	0.000	0.000	0.0	0.0	0.0
	SY (RS)	0.000	0.000	0.000	0.0	0.0	0.0
	RC ENV~1 Max	0.000	0.000	-0.002	0.0	0.0	0.0
	Min	-0.000	-0.000	-0.004	0.0	-0.0	0.0
	RC ENV~2 Max	0.000	-0.000	-0.002	0.0	-0.0	0.0
	Min	-0.000	-0.000	-0.003	0.0	-0.0	0.0
525	SX (RS)	0.000	0.000	0.000	0.0	0.0	0.0
	SY (RS)	0.000	0.000	0.000	0.0	0.0	0.0
	RC ENV~1 Max	0.000	0.000	-0.002	0.0	0.0	0.0
	Min	-0.000	-0.000	-0.004	0.0	-0.0	0.0
	RC ENV~2 Max	0.000	-0.000	-0.002	0.0	0.0	0.0
	Min	-0.000	-0.000	-0.003	0.0	-0.0	0.0
526	SX (RS)	0.000	0.000	0.000	0.0	0.0	0.0
	SY (RS)	0.000	0.000	0.000	0.0	0.0	0.0
	RC ENV~1 Max	0.000	0.000	-0.002	0.0	0.0	0.0
	Min	-0.000	-0.000	-0.004	0.0	-0.0	0.0
	RC ENV~2 Max	0.000	-0.000	-0.002	0.0	0.0	0.0
	Min	-0.000	-0.000	-0.003	0.0	-0.0	0.0

527	SX (RS)	0.000	0.000	0.000	0.0	0.0	0.0
	SY (RS)	0.000	0.000	0.000	0.0	0.0	0.0
RC ENV~1	Max	0.000	0.000	-0.002	0.0	0.0	0.0
	Min	-0.000	-0.000	-0.004	-0.0	-0.0	0.0
RC ENV~2	Max	0.000	-0.000	-0.002	0.0	0.0	0.0
	Min	-0.000	-0.000	-0.003	-0.0	0.0	0.0
528	SX (RS)	0.000	0.000	0.000	0.0	0.0	0.0
	SY (RS)	0.000	0.000	0.000	0.0	0.0	0.0
RC ENV~1	Max	0.000	0.000	-0.002	0.0	0.0	0.0
	Min	-0.000	-0.000	-0.004	-0.0	-0.0	0.0
RC ENV~2	Max	0.000	-0.000	-0.002	0.0	0.0	0.0
	Min	-0.000	-0.000	-0.003	-0.0	0.0	0.0
529	SX (RS)	0.000	0.000	0.000	0.0	0.0	0.0
	SY (RS)	0.000	0.000	0.000	0.0	0.0	0.0
RC ENV~1	Max	0.000	0.000	-0.003	0.0	-0.0	0.0
	Min	-0.000	-0.000	-0.004	0.0	-0.0	0.0
RC ENV~2	Max	0.000	0.000	-0.003	0.0	-0.0	0.0
	Min	-0.000	0.000	-0.003	0.0	-0.0	0.0
530	SX (RS)	0.000	0.000	0.000	0.0	0.0	0.0
	SY (RS)	0.000	0.000	0.000	0.0	0.0	0.0
RC ENV~1	Max	0.000	0.000	-0.003	0.0	-0.0	0.0
	Min	-0.000	-0.000	-0.004	0.0	-0.0	0.0
RC ENV~2	Max	0.000	0.000	-0.003	0.0	-0.0	0.0
	Min	-0.000	0.000	-0.003	0.0	-0.0	0.0
531	SX (RS)	0.000	0.000	0.000	0.0	0.0	0.0
	SY (RS)	0.000	0.000	0.000	0.0	0.0	0.0
RC ENV~1	Max	0.000	0.000	-0.002	0.0	-0.0	0.0
	Min	-0.000	-0.000	-0.004	0.0	-0.0	0.0
RC ENV~2	Max	0.000	0.000	-0.003	0.0	-0.0	0.0
	Min	-0.000	0.000	-0.003	0.0	-0.0	0.0
532	SX (RS)	0.000	0.000	0.000	0.0	0.0	0.0
	SY (RS)	0.000	0.000	0.000	0.0	0.0	0.0
RC ENV~1	Max	0.000	0.000	-0.002	0.0	0.0	0.0
	Min	-0.000	-0.000	-0.004	0.0	-0.0	0.0
RC ENV~2	Max	0.000	0.000	-0.002	0.0	0.0	0.0
	Min	-0.000	0.000	-0.003	0.0	-0.0	0.0
533	SX (RS)	0.000	0.000	0.000	0.0	0.0	0.0
	SY (RS)	0.000	0.000	0.000	0.0	0.0	0.0
RC ENV~1	Max	0.000	0.000	-0.002	0.0	0.0	0.0
	Min	-0.000	-0.000	-0.004	0.0	-0.0	0.0
RC ENV~2	Max	0.000	0.000	-0.002	0.0	0.0	0.0
	Min	-0.000	0.000	-0.003	0.0	-0.0	0.0
534	SX (RS)	0.000	0.000	0.000	0.0	0.0	0.0
	SY (RS)	0.000	0.000	0.000	0.0	0.0	0.0
RC ENV~1	Max	0.000	0.000	-0.002	0.0	0.0	0.0
	Min	-0.000	-0.000	-0.004	-0.0	-0.0	0.0
RC ENV~2	Max	0.000	0.000	-0.002	0.0	0.0	0.0
	Min	-0.000	0.000	-0.003	0.0	0.0	0.0
535	SX (RS)	0.000	0.000	0.000	0.0	0.0	0.0
	SY (RS)	0.000	0.000	0.000	0.0	0.0	0.0
RC ENV~1	Max	0.000	0.000	-0.002	0.0	0.0	0.0
	Min	-0.000	-0.000	-0.004	-0.0	-0.0	0.0

	RC ENV~2	Max	0.000	0.000	-0.002	0.0	0.0	0.0
		Min	-0.000	0.000	-0.003	-0.0	0.0	0.0
536	SX (RS)		0.000	0.000	0.000	0.0	0.0	0.0
	SY (RS)		0.000	0.000	0.000	0.0	0.0	0.0
	RC ENV~1	Max	0.000	0.000	-0.002	0.0	0.0	0.0
		Min	-0.000	-0.000	-0.004	-0.0	-0.0	0.0
	RC ENV~2	Max	0.000	0.000	-0.002	0.0	0.0	0.0
		Min	-0.000	0.000	-0.003	-0.0	0.0	0.0
537	SX (RS)		0.000	0.000	0.000	0.0	0.0	0.0
	SY (RS)		0.000	0.000	0.000	0.0	0.0	0.0
	RC ENV~1	Max	0.000	0.000	-0.003	0.0	-0.0	0.0
		Min	-0.000	-0.000	-0.004	0.0	-0.0	0.0
	RC ENV~2	Max	0.000	0.000	-0.003	0.0	-0.0	0.0
		Min	-0.000	0.000	-0.003	0.0	-0.0	0.0
538	SX (RS)		0.000	0.000	0.000	0.0	0.0	0.0
	SY (RS)		0.000	0.000	0.000	0.0	0.0	0.0
	RC ENV~1	Max	0.000	0.000	-0.002	0.0	-0.0	0.0
		Min	-0.000	-0.000	-0.004	0.0	-0.0	0.0
	RC ENV~2	Max	0.000	0.000	-0.003	0.0	-0.0	0.0
		Min	-0.000	0.000	-0.003	0.0	-0.0	0.0
539	SX (RS)		0.000	0.000	0.000	0.0	0.0	0.0
	SY (RS)		0.000	0.000	0.000	0.0	0.0	0.0
	RC ENV~1	Max	0.000	0.000	-0.002	0.0	-0.0	0.0
		Min	-0.000	-0.000	-0.004	0.0	-0.0	0.0
	RC ENV~2	Max	0.000	0.000	-0.002	0.0	-0.0	0.0
		Min	-0.000	0.000	-0.003	0.0	-0.0	0.0
540	SX (RS)		0.000	0.000	0.000	0.0	0.0	0.0
	SY (RS)		0.000	0.000	0.000	0.0	0.0	0.0
	RC ENV~1	Max	0.000	0.000	-0.002	0.0	0.0	0.0
		Min	-0.000	-0.000	-0.004	0.0	-0.0	0.0
	RC ENV~2	Max	0.000	0.000	-0.002	0.0	0.0	0.0
		Min	-0.000	0.000	-0.003	0.0	-0.0	0.0
541	SX (RS)		0.000	0.000	0.000	0.0	0.0	0.0
	SY (RS)		0.000	0.000	0.000	0.0	0.0	0.0
	RC ENV~1	Max	0.000	0.000	-0.002	0.0	0.0	0.0
		Min	-0.000	-0.000	-0.004	0.0	-0.0	0.0
	RC ENV~2	Max	0.000	0.000	-0.002	0.0	0.0	0.0
		Min	-0.000	0.000	-0.003	0.0	-0.0	0.0
542	SX (RS)		0.000	0.000	0.000	0.0	0.0	0.0
	SY (RS)		0.000	0.000	0.000	0.0	0.0	0.0
	RC ENV~1	Max	0.000	0.000	-0.002	0.0	0.0	0.0
		Min	-0.000	-0.000	-0.004	-0.0	-0.0	0.0
	RC ENV~2	Max	0.000	0.000	-0.002	0.0	0.0	0.0
		Min	-0.000	0.000	-0.003	-0.0	0.0	0.0
543	SX (RS)		0.000	0.000	0.000	0.0	0.0	0.0
	SY (RS)		0.000	0.000	0.000	0.0	0.0	0.0
	RC ENV~1	Max	0.000	0.000	-0.002	0.0	0.0	0.0
		Min	-0.000	-0.000	-0.004	-0.0	-0.0	0.0
	RC ENV~2	Max	0.000	0.000	-0.002	0.0	0.0	0.0
		Min	-0.000	0.000	-0.003	-0.0	0.0	0.0
544	SX (RS)		0.000	0.000	0.000	0.0	0.0	0.0
	SY (RS)		0.000	0.000	0.000	0.0	0.0	0.0
	RC ENV~1	Max	0.000	0.000	-0.002	0.0	0.0	0.0

	Min	-0.000	-0.000	-0.004	-0.0	-0.0	0.0
RC ENV~2	Max	0.000	0.000	-0.002	0.0	0.0	0.0
	Min	-0.000	0.000	-0.003	-0.0	0.0	0.0
545	SX (RS)	0.000	0.000	0.000	0.0	0.0	0.0
	SY (RS)	0.000	0.000	0.000	0.0	0.0	0.0
RC ENV~1	Max	0.000	0.000	-0.002	0.0	-0.0	0.0
	Min	-0.000	-0.000	-0.004	0.0	-0.0	0.0
RC ENV~2	Max	0.000	0.000	-0.003	0.0	-0.0	0.0
	Min	-0.000	0.000	-0.003	0.0	-0.0	0.0
546	SX (RS)	0.000	0.000	0.000	0.0	0.0	0.0
	SY (RS)	0.000	0.000	0.000	0.0	0.0	0.0
RC ENV~1	Max	0.000	0.000	-0.002	0.0	-0.0	0.0
	Min	-0.000	-0.000	-0.004	0.0	-0.0	0.0
RC ENV~2	Max	0.000	0.000	-0.002	0.0	-0.0	0.0
	Min	-0.000	0.000	-0.003	0.0	-0.0	0.0
547	SX (RS)	0.000	0.000	0.000	0.0	0.0	0.0
	SY (RS)	0.000	0.000	0.000	0.0	0.0	0.0
RC ENV~1	Max	0.000	0.000	-0.002	0.0	0.0	0.0
	Min	-0.000	-0.000	-0.004	0.0	-0.0	0.0
RC ENV~2	Max	0.000	0.000	-0.002	0.0	-0.0	0.0
	Min	-0.000	0.000	-0.003	0.0	-0.0	0.0
548	SX (RS)	0.000	0.000	0.000	0.0	0.0	0.0
	SY (RS)	0.000	0.000	0.000	0.0	0.0	0.0
RC ENV~1	Max	0.000	0.000	-0.002	0.0	0.0	0.0
	Min	-0.000	-0.000	-0.004	0.0	-0.0	0.0
RC ENV~2	Max	0.000	0.000	-0.002	0.0	0.0	0.0
	Min	-0.000	0.000	-0.003	0.0	-0.0	0.0
549	SX (RS)	0.000	0.000	0.000	0.0	0.0	0.0
	SY (RS)	0.000	0.000	0.000	0.0	0.0	0.0
RC ENV~1	Max	0.000	0.000	-0.002	0.0	0.0	0.0
	Min	-0.000	-0.000	-0.004	0.0	-0.0	0.0
RC ENV~2	Max	0.000	0.000	-0.002	0.0	0.0	0.0
	Min	-0.000	0.000	-0.003	0.0	-0.0	0.0
550	SX (RS)	0.000	0.000	0.000	0.0	0.0	0.0
	SY (RS)	0.000	0.000	0.000	0.0	0.0	0.0
RC ENV~1	Max	0.000	0.000	-0.002	0.0	0.0	0.0
	Min	-0.000	-0.000	-0.004	-0.0	0.0	0.0
RC ENV~2	Max	0.000	0.000	-0.002	0.0	0.0	0.0
	Min	-0.000	0.000	-0.003	-0.0	0.0	0.0
551	SX (RS)	0.000	0.000	0.000	0.0	0.0	0.0
	SY (RS)	0.000	0.000	0.000	0.0	0.0	0.0
RC ENV~1	Max	0.000	0.000	-0.002	0.0	0.0	0.0
	Min	-0.000	-0.000	-0.004	-0.0	0.0	0.0
RC ENV~2	Max	0.000	0.000	-0.002	0.0	0.0	0.0
	Min	-0.000	0.000	-0.003	-0.0	0.0	0.0
552	SX (RS)	0.000	0.000	0.000	0.0	0.0	0.0
	SY (RS)	0.000	0.000	0.000	0.0	0.0	0.0
RC ENV~1	Max	0.000	0.000	-0.002	0.0	0.0	0.0
	Min	-0.000	-0.000	-0.004	-0.0	0.0	0.0
RC ENV~2	Max	0.000	0.000	-0.002	0.0	0.0	0.0
	Min	-0.000	0.000	-0.003	-0.0	0.0	0.0
553	SX (RS)	0.000	0.000	0.000	0.0	0.0	0.0
	SY (RS)	0.000	0.000	0.000	0.0	0.0	0.0

	RC ENV~1	Max	0.000	0.000	-0.002	0.0	-0.0	0.0
		Min	-0.000	-0.000	-0.004	0.0	-0.0	0.0
	RC ENV~2	Max	0.000	0.000	-0.003	0.0	-0.0	0.0
		Min	-0.000	0.000	-0.003	0.0	-0.0	0.0
554	SX (RS)		0.000	0.000	0.000	0.0	0.0	0.0
	SY (RS)		0.000	0.000	0.000	0.0	0.0	0.0
	RC ENV~1	Max	0.000	0.000	-0.002	0.0	-0.0	0.0
		Min	-0.000	-0.000	-0.004	0.0	-0.0	0.0
	RC ENV~2	Max	0.000	0.000	-0.002	0.0	-0.0	0.0
		Min	-0.000	0.000	-0.003	0.0	-0.0	0.0
555	SX (RS)		0.000	0.000	0.000	0.0	0.0	0.0
	SY (RS)		0.000	0.000	0.000	0.0	0.0	0.0
	RC ENV~1	Max	0.000	0.000	-0.002	0.0	0.0	0.0
		Min	-0.000	-0.000	-0.004	0.0	-0.0	0.0
	RC ENV~2	Max	0.000	0.000	-0.002	0.0	-0.0	0.0
		Min	-0.000	0.000	-0.003	0.0	-0.0	0.0
556	SX (RS)		0.000	0.000	0.000	0.0	0.0	0.0
	SY (RS)		0.000	0.000	0.000	0.0	0.0	0.0
	RC ENV~1	Max	0.000	0.000	-0.002	0.0	0.0	0.0
		Min	-0.000	-0.000	-0.004	0.0	-0.0	0.0
	RC ENV~2	Max	0.000	0.000	-0.002	0.0	0.0	0.0
		Min	-0.000	0.000	-0.003	0.0	-0.0	0.0
557	SX (RS)		0.000	0.000	0.000	0.0	0.0	0.0
	SY (RS)		0.000	0.000	0.000	0.0	0.0	0.0
	RC ENV~1	Max	0.000	0.000	-0.002	0.0	0.0	0.0
		Min	-0.000	-0.000	-0.004	0.0	-0.0	0.0
	RC ENV~2	Max	0.000	0.000	-0.002	0.0	0.0	0.0
		Min	-0.000	0.000	-0.003	0.0	-0.0	0.0
558	SX (RS)		0.000	0.000	0.000	0.0	0.0	0.0
	SY (RS)		0.000	0.000	0.000	0.0	0.0	0.0
	RC ENV~1	Max	0.000	0.000	-0.002	0.0	0.0	0.0
		Min	-0.000	-0.000	-0.004	-0.0	0.0	0.0
	RC ENV~2	Max	0.000	0.000	-0.002	0.0	0.0	0.0
		Min	-0.000	0.000	-0.003	0.0	0.0	0.0
559	SX (RS)		0.000	0.000	0.000	0.0	0.0	0.0
	SY (RS)		0.000	0.000	0.000	0.0	0.0	0.0
	RC ENV~1	Max	0.000	0.000	-0.002	0.0	0.0	0.0
		Min	-0.000	-0.000	-0.004	-0.0	0.0	0.0
	RC ENV~2	Max	0.000	0.000	-0.002	0.0	0.0	0.0
		Min	-0.000	0.000	-0.003	-0.0	0.0	0.0
560	SX (RS)		0.000	0.000	0.000	0.0	0.0	0.0
	SY (RS)		0.000	0.000	0.000	0.0	0.0	0.0
	RC ENV~1	Max	0.000	0.000	-0.003	0.0	0.0	0.0
		Min	-0.000	-0.000	-0.004	-0.0	-0.0	0.0
	RC ENV~2	Max	0.000	-0.000	-0.003	0.0	0.0	0.0
		Min	-0.000	-0.000	-0.003	-0.0	-0.0	0.0
561	SX (RS)		0.000	0.000	0.000	0.0	0.0	0.0
	SY (RS)		0.000	0.000	0.000	0.0	0.0	0.0
	RC ENV~1	Max	0.000	0.000	-0.003	0.0	0.0	0.0
		Min	-0.000	-0.000	-0.004	-0.0	-0.0	0.0
	RC ENV~2	Max	0.000	-0.000	-0.003	0.0	0.0	0.0
		Min	-0.000	-0.000	-0.003	-0.0	-0.0	0.0

562	SX (RS)	0.000	0.000	0.000	0.0	0.0	0.0
	SY (RS)	0.000	0.000	0.000	0.0	0.0	0.0
RC ENV~1	Max	0.000	0.000	-0.003	0.0	0.0	0.0
	Min	-0.000	-0.000	-0.004	-0.0	0.0	0.0
RC ENV~2	Max	0.000	-0.000	-0.003	0.0	0.0	0.0
	Min	-0.000	-0.000	-0.003	-0.0	0.0	0.0
563	SX (RS)	0.000	0.000	0.000	0.0	0.0	0.0
	SY (RS)	0.000	0.000	0.000	0.0	0.0	0.0
RC ENV~1	Max	0.000	0.000	-0.003	0.0	0.0	0.0
	Min	-0.000	-0.000	-0.004	-0.0	0.0	0.0
RC ENV~2	Max	0.000	-0.000	-0.003	-0.0	0.0	0.0
	Min	-0.000	-0.000	-0.003	-0.0	0.0	0.0
564	SX (RS)	0.000	0.000	0.000	0.0	0.0	0.0
	SY (RS)	0.000	0.000	0.000	0.0	0.0	0.0
RC ENV~1	Max	0.000	0.000	-0.003	0.0	0.0	0.0
	Min	-0.000	-0.000	-0.004	-0.0	0.0	0.0
RC ENV~2	Max	0.000	-0.000	-0.003	-0.0	0.0	0.0
	Min	-0.000	-0.000	-0.003	-0.0	0.0	0.0
565	SX (RS)	0.000	0.000	0.000	0.0	0.0	0.0
	SY (RS)	0.000	0.000	0.000	0.0	0.0	0.0
RC ENV~1	Max	0.000	0.000	-0.003	0.0	0.0	0.0
	Min	-0.000	-0.000	-0.004	-0.0	0.0	0.0
RC ENV~2	Max	0.000	-0.000	-0.003	-0.0	0.0	0.0
	Min	-0.000	-0.000	-0.003	-0.0	0.0	0.0
566	SX (RS)	0.000	0.000	0.000	0.0	0.0	0.0
	SY (RS)	0.000	0.000	0.000	0.0	0.0	0.0
RC ENV~1	Max	0.000	0.000	-0.003	0.0	0.0	0.0
	Min	-0.000	-0.000	-0.004	-0.0	0.0	0.0
RC ENV~2	Max	0.000	-0.000	-0.003	0.0	0.0	0.0
	Min	-0.000	-0.000	-0.003	-0.0	0.0	0.0
567	SX (RS)	0.000	0.000	0.000	0.0	0.0	0.0
	SY (RS)	0.000	0.000	0.000	0.0	0.0	0.0
RC ENV~1	Max	0.000	0.000	-0.003	0.0	0.0	0.0
	Min	-0.000	-0.000	-0.004	-0.0	-0.0	0.0
RC ENV~2	Max	0.000	-0.000	-0.003	0.0	0.0	0.0
	Min	-0.000	-0.000	-0.003	-0.0	0.0	0.0
568	SX (RS)	0.000	0.000	0.000	0.0	0.0	0.0
	SY (RS)	0.000	0.000	0.000	0.0	0.0	0.0
RC ENV~1	Max	0.000	0.000	-0.002	0.0	0.0	0.0
	Min	-0.000	-0.000	-0.004	-0.0	0.0	0.0
RC ENV~2	Max	0.000	-0.000	-0.003	0.0	0.0	0.0
	Min	-0.000	-0.000	-0.003	-0.0	0.0	0.0
569	SX (RS)	0.000	0.000	0.000	0.0	0.0	0.0
	SY (RS)	0.000	0.000	0.000	0.0	0.0	0.0
RC ENV~1	Max	0.000	0.000	-0.003	0.0	0.0	0.0
	Min	-0.000	-0.000	-0.004	-0.0	0.0	0.0
RC ENV~2	Max	0.000	-0.000	-0.003	0.0	0.0	0.0
	Min	-0.000	-0.000	-0.003	-0.0	0.0	0.0
570	SX (RS)	0.000	0.000	0.000	0.0	0.0	0.0
	SY (RS)	0.000	0.000	0.000	0.0	0.0	0.0
RC ENV~1	Max	0.000	0.000	-0.003	0.0	0.0	0.0
	Min	-0.000	-0.000	-0.004	-0.0	0.0	0.0
RC ENV~2	Max	0.000	-0.000	-0.003	0.0	0.0	0.0

	Min	-0.000	-0.000	-0.003	-0.0	0.0	0.0
571	SX (RS)	0.000	0.000	0.000	0.0	0.0	0.0
	SY (RS)	0.000	0.000	0.000	0.0	0.0	0.0
RC ENV~1	Max	0.000	0.000	-0.003	0.0	0.0	0.0
	Min	-0.000	-0.000	-0.004	-0.0	0.0	0.0
RC ENV~2	Max	0.000	-0.000	-0.003	0.0	0.0	0.0
	Min	-0.000	-0.000	-0.003	-0.0	0.0	0.0
572	SX (RS)	0.000	0.000	0.000	0.0	0.0	0.0
	SY (RS)	0.000	0.000	0.000	0.0	0.0	0.0
RC ENV~1	Max	0.000	0.000	-0.003	0.0	0.0	0.0
	Min	-0.000	-0.000	-0.004	-0.0	0.0	0.0
RC ENV~2	Max	0.000	-0.000	-0.003	0.0	0.0	0.0
	Min	-0.000	-0.000	-0.003	-0.0	0.0	0.0
573	SX (RS)	0.000	0.000	0.000	0.0	0.0	0.0
	SY (RS)	0.000	0.000	0.000	0.0	0.0	0.0
RC ENV~1	Max	0.000	0.000	-0.003	0.0	0.0	0.0
	Min	-0.000	-0.000	-0.004	-0.0	0.0	0.0
RC ENV~2	Max	0.000	-0.000	-0.003	0.0	0.0	0.0
	Min	-0.000	-0.000	-0.003	-0.0	0.0	0.0
574	SX (RS)	0.000	0.000	0.000	0.0	0.0	0.0
	SY (RS)	0.000	0.000	0.000	0.0	0.0	0.0
RC ENV~1	Max	0.000	0.000	-0.002	0.0	0.0	0.0
	Min	-0.000	-0.000	-0.004	-0.0	-0.0	0.0
RC ENV~2	Max	0.000	-0.000	-0.003	0.0	0.0	0.0
	Min	-0.000	-0.000	-0.003	-0.0	0.0	0.0
575	SX (RS)	0.000	0.000	0.000	0.0	0.0	0.0
	SY (RS)	0.000	0.000	0.000	0.0	0.0	0.0
RC ENV~1	Max	0.000	0.000	-0.002	0.0	0.0	0.0
	Min	-0.000	-0.000	-0.004	-0.0	0.0	0.0
RC ENV~2	Max	0.000	-0.000	-0.003	0.0	0.0	0.0
	Min	-0.000	-0.000	-0.003	-0.0	0.0	0.0
576	SX (RS)	0.000	0.000	0.000	0.0	0.0	0.0
	SY (RS)	0.000	0.000	0.000	0.0	0.0	0.0
RC ENV~1	Max	0.000	0.000	-0.003	0.0	0.0	0.0
	Min	-0.000	-0.000	-0.004	-0.0	0.0	0.0
RC ENV~2	Max	0.000	-0.000	-0.003	0.0	0.0	0.0
	Min	-0.000	-0.000	-0.003	-0.0	0.0	0.0
577	SX (RS)	0.000	0.000	0.000	0.0	0.0	0.0
	SY (RS)	0.000	0.000	0.000	0.0	0.0	0.0
RC ENV~1	Max	0.000	0.000	-0.003	0.0	0.0	0.0
	Min	-0.000	-0.000	-0.004	-0.0	0.0	0.0
RC ENV~2	Max	0.000	-0.000	-0.003	0.0	0.0	0.0
	Min	-0.000	-0.000	-0.003	-0.0	0.0	0.0
578	SX (RS)	0.000	0.000	0.000	0.0	0.0	0.0
	SY (RS)	0.000	0.000	0.000	0.0	0.0	0.0
RC ENV~1	Max	0.000	0.000	-0.003	0.0	0.0	0.0
	Min	-0.000	-0.000	-0.004	-0.0	0.0	0.0
RC ENV~2	Max	0.000	-0.000	-0.003	0.0	0.0	0.0
	Min	-0.000	-0.000	-0.003	-0.0	0.0	0.0
579	SX (RS)	0.000	0.000	0.000	0.0	0.0	0.0
	SY (RS)	0.000	0.000	0.000	0.0	0.0	0.0
RC ENV~1	Max	0.000	0.000	-0.003	0.0	0.0	0.0
	Min	-0.000	-0.000	-0.004	-0.0	0.0	0.0

	RC ENV~2	Max	0.000	-0.000	-0.003	0.0	0.0	0.0
		Min	-0.000	-0.000	-0.003	-0.0	0.0	0.0
580	SX (RS)		0.000	0.000	0.000	0.0	0.0	0.0
	SY (RS)		0.000	0.000	0.000	0.0	0.0	0.0
	RC ENV~1	Max	0.000	0.000	-0.003	0.0	0.0	0.0
		Min	-0.000	-0.000	-0.004	-0.0	0.0	0.0
	RC ENV~2	Max	0.000	-0.000	-0.003	0.0	0.0	0.0
		Min	-0.000	-0.000	-0.003	-0.0	0.0	0.0
581	SX (RS)		0.000	0.000	0.000	0.0	0.0	0.0
	SY (RS)		0.000	0.000	0.000	0.0	0.0	0.0
	RC ENV~1	Max	0.000	0.000	-0.002	0.0	0.0	0.0
		Min	-0.000	-0.000	-0.004	-0.0	-0.0	0.0
	RC ENV~2	Max	0.000	0.000	-0.002	0.0	0.0	0.0
		Min	-0.000	0.000	-0.003	-0.0	0.0	0.0
582	SX (RS)		0.000	0.000	0.000	0.0	0.0	0.0
	SY (RS)		0.000	0.000	0.000	0.0	0.0	0.0
	RC ENV~1	Max	0.000	0.000	-0.002	0.0	0.0	0.0
		Min	-0.000	-0.000	-0.004	-0.0	0.0	0.0
	RC ENV~2	Max	0.000	0.000	-0.003	0.0	0.0	0.0
		Min	-0.000	0.000	-0.003	-0.0	0.0	0.0
583	SX (RS)		0.000	0.000	0.000	0.0	0.0	0.0
	SY (RS)		0.000	0.000	0.000	0.0	0.0	0.0
	RC ENV~1	Max	0.000	0.000	-0.002	0.0	0.0	0.0
		Min	-0.000	-0.000	-0.004	-0.0	0.0	0.0
	RC ENV~2	Max	0.000	0.000	-0.003	0.0	0.0	0.0
		Min	-0.000	0.000	-0.003	-0.0	0.0	0.0
584	SX (RS)		0.000	0.000	0.000	0.0	0.0	0.0
	SY (RS)		0.000	0.000	0.000	0.0	0.0	0.0
	RC ENV~1	Max	0.000	0.000	-0.003	0.0	0.0	0.0
		Min	-0.000	-0.000	-0.004	-0.0	0.0	0.0
	RC ENV~2	Max	0.000	0.000	-0.003	0.0	0.0	0.0
		Min	-0.000	0.000	-0.003	-0.0	0.0	0.0
585	SX (RS)		0.000	0.000	0.000	0.0	0.0	0.0
	SY (RS)		0.000	0.000	0.000	0.0	0.0	0.0
	RC ENV~1	Max	0.000	0.000	-0.003	0.0	0.0	0.0
		Min	-0.000	-0.000	-0.004	-0.0	0.0	0.0
	RC ENV~2	Max	0.000	0.000	-0.003	0.0	0.0	0.0
		Min	-0.000	0.000	-0.003	-0.0	0.0	0.0
586	SX (RS)		0.000	0.000	0.000	0.0	0.0	0.0
	SY (RS)		0.000	0.000	0.000	0.0	0.0	0.0
	RC ENV~1	Max	0.000	0.000	-0.003	0.0	0.0	0.0
		Min	-0.000	-0.000	-0.004	-0.0	0.0	0.0
	RC ENV~2	Max	0.000	0.000	-0.003	-0.0	0.0	0.0
		Min	-0.000	0.000	-0.003	-0.0	0.0	0.0
587	SX (RS)		0.000	0.000	0.000	0.0	0.0	0.0
	SY (RS)		0.000	0.000	0.000	0.0	0.0	0.0
	RC ENV~1	Max	0.000	0.000	-0.003	0.0	0.0	0.0
		Min	-0.000	-0.000	-0.004	-0.0	0.0	0.0
	RC ENV~2	Max	0.000	0.000	-0.003	-0.0	0.0	0.0
		Min	-0.000	-0.000	-0.003	-0.0	0.0	0.0
588	SX (RS)		0.000	0.000	0.000	0.0	0.0	0.0
	SY (RS)		0.000	0.000	0.000	0.0	0.0	0.0

	RC ENV~1	Max	0.000	0.000	-0.002	0.0	0.0	0.0
		Min	-0.000	-0.000	-0.004	-0.0	-0.0	0.0
	RC ENV~2	Max	0.000	0.000	-0.002	0.0	0.0	0.0
		Min	-0.000	0.000	-0.003	-0.0	0.0	0.0
589	SX (RS)		0.000	0.000	0.000	0.0	0.0	0.0
	SY (RS)		0.000	0.000	0.000	0.0	0.0	0.0
	RC ENV~1	Max	0.000	0.000	-0.002	0.0	0.0	0.0
		Min	-0.000	-0.000	-0.004	-0.0	0.0	0.0
	RC ENV~2	Max	0.000	0.000	-0.003	0.0	0.0	0.0
		Min	-0.000	0.000	-0.003	-0.0	0.0	0.0
590	SX (RS)		0.000	0.000	0.000	0.0	0.0	0.0
	SY (RS)		0.000	0.000	0.000	0.0	0.0	0.0
	RC ENV~1	Max	0.000	0.000	-0.002	0.0	0.0	0.0
		Min	-0.000	-0.000	-0.004	-0.0	0.0	0.0
	RC ENV~2	Max	0.000	0.000	-0.003	0.0	0.0	0.0
		Min	-0.000	0.000	-0.003	-0.0	0.0	0.0
591	SX (RS)		0.000	0.000	0.000	0.0	0.0	0.0
	SY (RS)		0.000	0.000	0.000	0.0	0.0	0.0
	RC ENV~1	Max	0.000	0.000	-0.003	0.0	0.0	0.0
		Min	-0.000	-0.000	-0.004	-0.0	0.0	0.0
	RC ENV~2	Max	0.000	0.000	-0.003	0.0	0.0	0.0
		Min	-0.000	0.000	-0.003	-0.0	0.0	0.0
592	SX (RS)		0.000	0.000	0.000	0.0	0.0	0.0
	SY (RS)		0.000	0.000	0.000	0.0	0.0	0.0
	RC ENV~1	Max	0.000	0.000	-0.003	0.0	0.0	0.0
		Min	-0.000	-0.000	-0.004	-0.0	0.0	0.0
	RC ENV~2	Max	0.000	0.000	-0.003	0.0	0.0	0.0
		Min	-0.000	0.000	-0.003	-0.0	0.0	0.0
593	SX (RS)		0.000	0.000	0.000	0.0	0.0	0.0
	SY (RS)		0.000	0.000	0.000	0.0	0.0	0.0
	RC ENV~1	Max	0.000	0.000	-0.003	-0.0	0.0	0.0
		Min	-0.000	-0.000	-0.004	-0.0	0.0	0.0
	RC ENV~2	Max	0.000	0.000	-0.003	-0.0	0.0	0.0
		Min	-0.000	0.000	-0.003	-0.0	0.0	0.0
594	SX (RS)		0.000	0.000	0.000	0.0	0.0	0.0
	SY (RS)		0.000	0.000	0.000	0.0	0.0	0.0
	RC ENV~1	Max	0.000	0.000	-0.003	-0.0	0.0	0.0
		Min	-0.000	-0.000	-0.004	-0.0	0.0	0.0
	RC ENV~2	Max	0.000	0.000	-0.003	-0.0	0.0	0.0
		Min	-0.000	0.000	-0.003	-0.0	0.0	0.0
595	SX (RS)		0.000	0.000	0.000	0.0	0.0	0.0
	SY (RS)		0.000	0.000	0.000	0.0	0.0	0.0
	RC ENV~1	Max	0.000	0.000	-0.002	0.0	0.0	0.0
		Min	-0.000	-0.000	-0.004	-0.0	-0.0	0.0
	RC ENV~2	Max	0.000	0.000	-0.002	0.0	0.0	0.0
		Min	-0.000	0.000	-0.003	-0.0	0.0	0.0
596	SX (RS)		0.000	0.000	0.000	0.0	0.0	0.0
	SY (RS)		0.000	0.000	0.000	0.0	0.0	0.0
	RC ENV~1	Max	0.000	0.000	-0.002	0.0	0.0	0.0
		Min	-0.000	-0.000	-0.004	-0.0	0.0	0.0
	RC ENV~2	Max	0.000	0.000	-0.003	0.0	0.0	0.0
		Min	-0.000	0.000	-0.003	-0.0	0.0	0.0
597	SX (RS)		0.000	0.000	0.000	0.0	0.0	0.0

	SY (RS)	0.000	0.000	0.000	0.0	0.0	0.0
	RC ENV~1 Max	0.000	0.000	-0.002	0.0	0.0	0.0
	Min	-0.000	-0.000	-0.004	-0.0	0.0	0.0
	RC ENV~2 Max	0.000	0.000	-0.003	0.0	0.0	0.0
	Min	-0.000	0.000	-0.003	-0.0	0.0	0.0
598	SX (RS)	0.000	0.000	0.000	0.0	0.0	0.0
	SY (RS)	0.000	0.000	0.000	0.0	0.0	0.0
	RC ENV~1 Max	0.000	0.000	-0.003	0.0	0.0	0.0
	Min	-0.000	-0.000	-0.004	-0.0	0.0	0.0
	RC ENV~2 Max	0.000	0.000	-0.003	0.0	0.0	0.0
	Min	-0.000	0.000	-0.003	-0.0	0.0	0.0
599	SX (RS)	0.000	0.000	0.000	0.0	0.0	0.0
	SY (RS)	0.000	0.000	0.000	0.0	0.0	0.0
	RC ENV~1 Max	0.000	0.000	-0.003	0.0	0.0	0.0
	Min	-0.000	-0.000	-0.004	-0.0	0.0	0.0
	RC ENV~2 Max	0.000	0.000	-0.003	0.0	0.0	0.0
	Min	-0.000	0.000	-0.003	-0.0	0.0	0.0
600	SX (RS)	0.000	0.000	0.000	0.0	0.0	0.0
	SY (RS)	0.000	0.000	0.000	0.0	0.0	0.0
	RC ENV~1 Max	0.000	0.000	-0.003	0.0	0.0	0.0
	Min	-0.000	-0.000	-0.004	-0.0	0.0	0.0
	RC ENV~2 Max	0.000	0.000	-0.003	0.0	0.0	0.0
	Min	-0.000	0.000	-0.003	-0.0	0.0	0.0
601	SX (RS)	0.000	0.000	0.000	0.0	0.0	0.0
	SY (RS)	0.000	0.000	0.000	0.0	0.0	0.0
	RC ENV~1 Max	0.000	0.000	-0.003	0.0	0.0	0.0
	Min	-0.000	-0.000	-0.005	-0.0	0.0	0.0
	RC ENV~2 Max	0.000	0.000	-0.003	-0.0	0.0	0.0
	Min	-0.000	0.000	-0.003	-0.0	0.0	0.0
602	SX (RS)	0.000	0.000	0.000	0.0	0.0	0.0
	SY (RS)	0.000	0.000	0.000	0.0	0.0	0.0
	RC ENV~1 Max	0.000	0.000	-0.002	0.0	0.0	0.0
	Min	-0.000	-0.000	-0.004	-0.0	-0.0	0.0
	RC ENV~2 Max	0.000	0.000	-0.002	0.0	0.0	0.0
	Min	-0.000	0.000	-0.003	-0.0	0.0	0.0
603	SX (RS)	0.000	0.000	0.000	0.0	0.0	0.0
	SY (RS)	0.000	0.000	0.000	0.0	0.0	0.0
	RC ENV~1 Max	0.000	0.000	-0.002	0.0	0.0	0.0
	Min	-0.000	-0.000	-0.004	-0.0	0.0	0.0
	RC ENV~2 Max	0.000	0.000	-0.002	0.0	0.0	0.0
	Min	-0.000	0.000	-0.003	-0.0	0.0	0.0
604	SX (RS)	0.000	0.000	0.000	0.0	0.0	0.0
	SY (RS)	0.000	0.000	0.000	0.0	0.0	0.0
	RC ENV~1 Max	0.000	0.000	-0.002	0.0	0.0	0.0
	Min	-0.000	-0.000	-0.004	-0.0	0.0	0.0
	RC ENV~2 Max	0.000	0.000	-0.003	0.0	0.0	0.0
	Min	-0.000	0.000	-0.003	-0.0	0.0	0.0
605	SX (RS)	0.000	0.000	0.000	0.0	0.0	0.0
	SY (RS)	0.000	0.000	0.000	0.0	0.0	0.0
	RC ENV~1 Max	0.000	0.000	-0.003	0.0	0.0	0.0
	Min	-0.000	-0.000	-0.004	-0.0	0.0	0.0
	RC ENV~2 Max	0.000	0.000	-0.003	0.0	0.0	0.0
	Min	-0.000	0.000	-0.003	-0.0	0.0	0.0

606	SX (RS)	0.000	0.000	0.000	0.0	0.0	0.0
	SY (RS)	0.000	0.000	0.000	0.0	0.0	0.0
RC ENV~1	Max	0.000	0.000	-0.003	0.0	0.0	0.0
	Min	-0.000	-0.000	-0.004	-0.0	0.0	0.0
RC ENV~2	Max	0.000	0.000	-0.003	0.0	0.0	0.0
	Min	-0.000	0.000	-0.003	-0.0	0.0	0.0
607	SX (RS)	0.000	0.000	0.000	0.0	0.0	0.0
	SY (RS)	0.000	0.000	0.000	0.0	0.0	0.0
RC ENV~1	Max	0.000	0.000	-0.003	0.0	0.0	0.0
	Min	-0.000	-0.000	-0.005	-0.0	0.0	0.0
RC ENV~2	Max	0.000	0.000	-0.003	0.0	0.0	0.0
	Min	-0.000	0.000	-0.003	-0.0	0.0	0.0
608	SX (RS)	0.000	0.000	0.000	0.0	0.0	0.0
	SY (RS)	0.000	0.000	0.000	0.0	0.0	0.0
RC ENV~1	Max	0.000	0.000	-0.003	0.0	0.0	0.0
	Min	-0.000	-0.000	-0.005	-0.0	0.0	0.0
RC ENV~2	Max	0.000	0.000	-0.003	0.0	0.0	0.0
	Min	-0.000	0.000	-0.003	-0.0	0.0	0.0
609	SX (RS)	0.000	0.000	0.000	0.0	0.0	0.0
	SY (RS)	0.000	0.000	0.000	0.0	0.0	0.0
RC ENV~1	Max	0.000	0.000	-0.002	0.0	-0.0	0.0
	Min	-0.000	-0.000	-0.004	0.0	-0.0	0.0
RC ENV~2	Max	0.000	0.000	-0.002	0.0	-0.0	0.0
	Min	-0.000	0.000	-0.003	0.0	-0.0	0.0
610	SX (RS)	0.000	0.000	0.000	0.0	0.0	0.0
	SY (RS)	0.000	0.000	0.000	0.0	0.0	0.0
RC ENV~1	Max	0.000	0.000	-0.002	0.0	-0.0	0.0
	Min	-0.000	-0.000	-0.004	0.0	-0.0	0.0
RC ENV~2	Max	0.000	0.000	-0.002	0.0	-0.0	0.0
	Min	-0.000	0.000	-0.003	0.0	-0.0	0.0
611	SX (RS)	0.000	0.000	0.000	0.0	0.0	0.0
	SY (RS)	0.000	0.000	0.000	0.0	0.0	0.0
RC ENV~1	Max	0.000	0.000	-0.002	0.0	0.0	0.0
	Min	-0.000	-0.000	-0.004	0.0	-0.0	0.0
RC ENV~2	Max	0.000	0.000	-0.002	0.0	0.0	0.0
	Min	-0.000	0.000	-0.003	0.0	-0.0	0.0
612	SX (RS)	0.000	0.000	0.000	0.0	0.0	0.0
	SY (RS)	0.000	0.000	0.000	0.0	0.0	0.0
RC ENV~1	Max	0.000	0.000	-0.002	0.0	0.0	0.0
	Min	-0.000	-0.000	-0.004	0.0	-0.0	0.0
RC ENV~2	Max	0.000	0.000	-0.002	0.0	0.0	0.0
	Min	-0.000	0.000	-0.003	0.0	-0.0	0.0
613	SX (RS)	0.000	0.000	0.000	0.0	0.0	0.0
	SY (RS)	0.000	0.000	0.000	0.0	0.0	0.0
RC ENV~1	Max	0.000	0.000	-0.002	0.0	0.0	0.0
	Min	-0.000	-0.000	-0.004	0.0	-0.0	0.0
RC ENV~2	Max	0.000	0.000	-0.002	0.0	0.0	0.0
	Min	-0.000	0.000	-0.003	0.0	0.0	0.0
614	SX (RS)	0.000	0.000	0.000	0.0	0.0	0.0
	SY (RS)	0.000	0.000	0.000	0.0	0.0	0.0
RC ENV~1	Max	0.000	0.000	-0.002	0.0	0.0	0.0
	Min	-0.000	-0.000	-0.004	-0.0	0.0	0.0

	RC ENV~2	Max	0.000	0.000	-0.002	0.0	0.0	0.0
		Min	-0.000	0.000	-0.003	0.0	0.0	0.0
615	SX (RS)		0.000	0.000	0.000	0.0	0.0	0.0
	SY (RS)		0.000	0.000	0.000	0.0	0.0	0.0
	RC ENV~1	Max	0.000	0.000	-0.002	0.0	0.0	0.0
		Min	-0.000	-0.000	-0.004	-0.0	0.0	0.0
	RC ENV~2	Max	0.000	0.000	-0.002	0.0	0.0	0.0
		Min	-0.000	0.000	-0.003	-0.0	0.0	0.0
616	SX (RS)		0.000	0.000	0.000	0.0	0.0	0.0
	SY (RS)		0.000	0.000	0.000	0.0	0.0	0.0
	RC ENV~1	Max	0.000	0.000	-0.002	0.0	0.0	0.0
		Min	-0.000	-0.000	-0.004	-0.0	0.0	0.0
	RC ENV~2	Max	0.000	0.000	-0.002	0.0	0.0	0.0
		Min	-0.000	0.000	-0.003	-0.0	0.0	0.0
617	SX (RS)		0.000	0.000	0.000	0.0	0.0	0.0
	SY (RS)		0.000	0.000	0.000	0.0	0.0	0.0
	RC ENV~1	Max	0.000	0.000	-0.002	0.0	0.0	0.0
		Min	-0.000	-0.000	-0.004	0.0	-0.0	0.0
	RC ENV~2	Max	0.000	0.000	-0.002	0.0	-0.0	0.0
		Min	-0.000	0.000	-0.003	0.0	-0.0	0.0
618	SX (RS)		0.000	0.000	0.000	0.0	0.0	0.0
	SY (RS)		0.000	0.000	0.000	0.0	0.0	0.0
	RC ENV~1	Max	0.000	0.000	-0.002	0.0	0.0	0.0
		Min	-0.000	-0.000	-0.004	0.0	-0.0	0.0
	RC ENV~2	Max	0.000	0.000	-0.002	0.0	-0.0	0.0
		Min	-0.000	0.000	-0.003	0.0	-0.0	0.0
619	SX (RS)		0.000	0.000	0.000	0.0	0.0	0.0
	SY (RS)		0.000	0.000	0.000	0.0	0.0	0.0
	RC ENV~1	Max	0.000	0.000	-0.002	0.0	0.0	0.0
		Min	-0.000	-0.000	-0.004	0.0	-0.0	0.0
	RC ENV~2	Max	0.000	0.000	-0.002	0.0	0.0	0.0
		Min	-0.000	0.000	-0.003	0.0	-0.0	0.0
620	SX (RS)		0.000	0.000	0.000	0.0	0.0	0.0
	SY (RS)		0.000	0.000	0.000	0.0	0.0	0.0
	RC ENV~1	Max	0.000	0.000	-0.002	0.0	0.0	0.0
		Min	-0.000	-0.000	-0.004	0.0	-0.0	0.0
	RC ENV~2	Max	0.000	0.000	-0.002	0.0	0.0	0.0
		Min	-0.000	0.000	-0.003	0.0	-0.0	0.0
621	SX (RS)		0.000	0.000	0.000	0.0	0.0	0.0
	SY (RS)		0.000	0.000	0.000	0.0	0.0	0.0
	RC ENV~1	Max	0.000	0.000	-0.002	0.0	0.0	0.0
		Min	-0.000	-0.000	-0.004	-0.0	-0.0	0.0
	RC ENV~2	Max	0.000	0.000	-0.002	0.0	0.0	0.0
		Min	-0.000	0.000	-0.003	0.0	0.0	0.0
622	SX (RS)		0.000	0.000	0.000	0.0	0.0	0.0
	SY (RS)		0.000	0.000	0.000	0.0	0.0	0.0
	RC ENV~1	Max	0.000	0.000	-0.002	0.0	0.0	0.0
		Min	-0.000	-0.000	-0.004	-0.0	0.0	0.0
	RC ENV~2	Max	0.000	0.000	-0.002	0.0	0.0	0.0
		Min	-0.000	0.000	-0.003	-0.0	0.0	0.0
623	SX (RS)		0.000	0.000	0.000	0.0	0.0	0.0
	SY (RS)		0.000	0.000	0.000	0.0	0.0	0.0
	RC ENV~1	Max	0.000	0.000	-0.002	0.0	0.0	0.0

	Min	-0.000	-0.000	-0.004	-0.0	0.0	0.0
RC ENV~2	Max	0.000	0.000	-0.002	0.0	0.0	0.0
	Min	-0.000	0.000	-0.003	-0.0	0.0	0.0
624	SX (RS)	0.000	0.000	0.000	0.0	0.0	0.0
	SY (RS)	0.000	0.000	0.000	0.0	0.0	0.0
RC ENV~1	Max	0.000	0.000	-0.002	0.0	0.0	0.0
	Min	-0.000	-0.000	-0.004	-0.0	0.0	0.0
RC ENV~2	Max	0.000	0.000	-0.002	0.0	0.0	0.0
	Min	-0.000	0.000	-0.003	-0.0	0.0	0.0
625	SX (RS)	0.000	0.000	0.000	0.0	0.0	0.0
	SY (RS)	0.000	0.000	0.000	0.0	0.0	0.0
RC ENV~1	Max	0.000	0.000	-0.002	0.0	0.0	0.0
	Min	-0.000	-0.000	-0.004	0.0	-0.0	0.0
RC ENV~2	Max	0.000	0.000	-0.002	0.0	0.0	0.0
	Min	-0.000	0.000	-0.003	0.0	-0.0	0.0
626	SX (RS)	0.000	0.000	0.000	0.0	0.0	0.0
	SY (RS)	0.000	0.000	0.000	0.0	0.0	0.0
RC ENV~1	Max	0.000	0.000	-0.002	0.0	0.0	0.0
	Min	-0.000	-0.000	-0.004	0.0	-0.0	0.0
RC ENV~2	Max	0.000	0.000	-0.002	0.0	0.0	0.0
	Min	-0.000	0.000	-0.003	0.0	-0.0	0.0
627	SX (RS)	0.000	0.000	0.000	0.0	0.0	0.0
	SY (RS)	0.000	0.000	0.000	0.0	0.0	0.0
RC ENV~1	Max	0.000	0.000	-0.002	0.0	0.0	0.0
	Min	-0.000	-0.000	-0.004	-0.0	-0.0	0.0
RC ENV~2	Max	0.000	0.000	-0.002	0.0	0.0	0.0
	Min	-0.000	0.000	-0.003	0.0	-0.0	0.0
628	SX (RS)	0.000	0.000	0.000	0.0	0.0	0.0
	SY (RS)	0.000	0.000	0.000	0.0	0.0	0.0
RC ENV~1	Max	0.000	0.000	-0.002	0.0	0.0	0.0
	Min	-0.000	-0.000	-0.004	-0.0	-0.0	0.0
RC ENV~2	Max	0.000	0.000	-0.002	0.0	0.0	0.0
	Min	-0.000	0.000	-0.003	-0.0	-0.0	0.0
629	SX (RS)	0.000	0.000	0.000	0.0	0.0	0.0
	SY (RS)	0.000	0.000	0.000	0.0	0.0	0.0
RC ENV~1	Max	0.000	0.000	-0.002	0.0	0.0	0.0
	Min	-0.000	-0.000	-0.004	-0.0	-0.0	0.0
RC ENV~2	Max	0.000	0.000	-0.002	0.0	0.0	0.0
	Min	-0.000	0.000	-0.003	-0.0	0.0	0.0
630	SX (RS)	0.000	0.000	0.000	0.0	0.0	0.0
	SY (RS)	0.000	0.000	0.000	0.0	0.0	0.0
RC ENV~1	Max	0.000	0.000	-0.002	0.0	0.0	0.0
	Min	-0.000	-0.000	-0.004	-0.0	0.0	0.0
RC ENV~2	Max	0.000	0.000	-0.002	0.0	0.0	0.0
	Min	-0.000	0.000	-0.003	-0.0	0.0	0.0
631	SX (RS)	0.000	0.000	0.000	0.0	0.0	0.0
	SY (RS)	0.000	0.000	0.000	0.0	0.0	0.0
RC ENV~1	Max	0.000	0.000	-0.002	0.0	0.0	0.0
	Min	-0.000	-0.000	-0.004	-0.0	0.0	0.0
RC ENV~2	Max	0.000	0.000	-0.002	0.0	0.0	0.0
	Min	-0.000	0.000	-0.003	-0.0	0.0	0.0
632	SX (RS)	0.000	0.000	0.000	0.0	0.0	0.0
	SY (RS)	0.000	0.000	0.000	0.0	0.0	0.0

	RC ENV~1	Max	0.000	0.000	-0.002	0.0	0.0	0.0
		Min	-0.000	-0.000	-0.004	-0.0	0.0	0.0
	RC ENV~2	Max	0.000	0.000	-0.002	0.0	0.0	0.0
		Min	-0.000	0.000	-0.003	-0.0	0.0	0.0
633	SX (RS)		0.000	0.000	0.000	0.0	0.0	0.0
	SY (RS)		0.000	0.000	0.000	0.0	0.0	0.0
	RC ENV~1	Max	0.000	0.000	-0.002	0.0	0.0	0.0
		Min	-0.000	-0.000	-0.004	-0.0	-0.0	0.0
	RC ENV~2	Max	0.000	0.000	-0.002	0.0	0.0	0.0
		Min	-0.000	0.000	-0.003	0.0	-0.0	0.0
634	SX (RS)		0.000	0.000	0.000	0.0	0.0	0.0
	SY (RS)		0.000	0.000	0.000	0.0	0.0	0.0
	RC ENV~1	Max	0.000	0.000	-0.002	0.0	0.0	0.0
		Min	-0.000	-0.000	-0.004	-0.0	-0.0	0.0
	RC ENV~2	Max	0.000	0.000	-0.002	0.0	0.0	0.0
		Min	-0.000	0.000	-0.003	-0.0	-0.0	0.0
635	SX (RS)		0.000	0.000	0.000	0.0	0.0	0.0
	SY (RS)		0.000	0.000	0.000	0.0	0.0	0.0
	RC ENV~1	Max	0.000	0.000	-0.002	0.0	0.0	0.0
		Min	-0.000	-0.000	-0.004	-0.0	-0.0	0.0
	RC ENV~2	Max	0.000	0.000	-0.002	0.0	0.0	0.0
		Min	-0.000	0.000	-0.003	-0.0	-0.0	0.0
636	SX (RS)		0.000	0.000	0.000	0.0	0.0	0.0
	SY (RS)		0.000	0.000	0.000	0.0	0.0	0.0
	RC ENV~1	Max	0.000	0.000	-0.002	0.0	0.0	0.0
		Min	-0.000	-0.000	-0.004	-0.0	-0.0	0.0
	RC ENV~2	Max	0.000	0.000	-0.002	0.0	0.0	0.0
		Min	-0.000	0.000	-0.003	-0.0	-0.0	0.0
637	SX (RS)		0.000	0.000	0.000	0.0	0.0	0.0
	SY (RS)		0.000	0.000	0.000	0.0	0.0	0.0
	RC ENV~1	Max	0.000	0.000	-0.002	0.0	0.0	0.0
		Min	-0.000	-0.000	-0.004	-0.0	-0.0	0.0
	RC ENV~2	Max	0.000	0.000	-0.002	0.0	0.0	0.0
		Min	-0.000	0.000	-0.003	-0.0	0.0	0.0
638	SX (RS)		0.000	0.000	0.000	0.0	0.0	0.0
	SY (RS)		0.000	0.000	0.000	0.0	0.0	0.0
	RC ENV~1	Max	0.000	0.000	-0.002	0.0	0.0	0.0
		Min	-0.000	-0.000	-0.004	-0.0	0.0	0.0
	RC ENV~2	Max	0.000	0.000	-0.002	0.0	0.0	0.0
		Min	-0.000	0.000	-0.003	-0.0	0.0	0.0
639	SX (RS)		0.000	0.000	0.000	0.0	0.0	0.0
	SY (RS)		0.000	0.000	0.000	0.0	0.0	0.0
	RC ENV~1	Max	0.000	0.000	-0.002	0.0	0.0	0.0
		Min	-0.000	-0.000	-0.004	-0.0	0.0	0.0
	RC ENV~2	Max	0.000	0.000	-0.002	0.0	0.0	0.0
		Min	-0.000	0.000	-0.003	-0.0	0.0	0.0
640	SX (RS)		0.000	0.000	0.000	0.0	0.0	0.0
	SY (RS)		0.000	0.000	0.000	0.0	0.0	0.0
	RC ENV~1	Max	0.000	0.000	-0.002	0.0	0.0	0.0
		Min	-0.000	-0.000	-0.004	-0.0	0.0	0.0
	RC ENV~2	Max	0.000	0.000	-0.002	0.0	0.0	0.0
		Min	-0.000	0.000	-0.003	-0.0	0.0	0.0

641	SX (RS)	0.000	0.000	0.000	0.0	0.0	0.0
	SY (RS)	0.000	0.000	0.000	0.0	0.0	0.0
RC ENV~1	Max	0.000	0.000	-0.002	0.0	0.0	0.0
	Min	-0.000	-0.000	-0.004	-0.0	-0.0	0.0
RC ENV~2	Max	0.000	0.000	-0.002	0.0	0.0	0.0
	Min	-0.000	0.000	-0.003	-0.0	-0.0	0.0
642	SX (RS)	0.000	0.000	0.000	0.0	0.0	0.0
	SY (RS)	0.000	0.000	0.000	0.0	0.0	0.0
RC ENV~1	Max	0.000	0.000	-0.002	0.0	0.0	0.0
	Min	-0.000	-0.000	-0.004	-0.0	-0.0	0.0
RC ENV~2	Max	0.000	0.000	-0.002	0.0	0.0	0.0
	Min	-0.000	0.000	-0.003	-0.0	-0.0	0.0
643	SX (RS)	0.000	0.000	0.000	0.0	0.0	0.0
	SY (RS)	0.000	0.000	0.000	0.0	0.0	0.0
RC ENV~1	Max	0.000	0.000	-0.002	0.0	0.0	0.0
	Min	-0.000	-0.000	-0.004	-0.0	-0.0	0.0
RC ENV~2	Max	0.000	0.000	-0.002	0.0	0.0	0.0
	Min	-0.000	0.000	-0.003	-0.0	-0.0	0.0
644	SX (RS)	0.000	0.000	0.000	0.0	0.0	0.0
	SY (RS)	0.000	0.000	0.000	0.0	0.0	0.0
RC ENV~1	Max	0.000	0.000	-0.002	0.0	0.0	0.0
	Min	-0.000	-0.000	-0.004	-0.0	-0.0	0.0
RC ENV~2	Max	0.000	0.000	-0.002	-0.0	0.0	0.0
	Min	-0.000	0.000	-0.003	-0.0	-0.0	0.0
645	SX (RS)	0.000	0.000	0.000	0.0	0.0	0.0
	SY (RS)	0.000	0.000	0.000	0.0	0.0	0.0
RC ENV~1	Max	0.000	0.000	-0.002	0.0	0.0	0.0
	Min	-0.000	-0.000	-0.004	-0.0	-0.0	0.0
RC ENV~2	Max	0.000	0.000	-0.002	-0.0	0.0	0.0
	Min	-0.000	0.000	-0.003	-0.0	0.0	0.0
646	SX (RS)	0.000	0.000	0.000	0.0	0.0	0.0
	SY (RS)	0.000	0.000	0.000	0.0	0.0	0.0
RC ENV~1	Max	0.000	0.000	-0.002	0.0	0.0	0.0
	Min	-0.000	-0.000	-0.004	-0.0	0.0	0.0
RC ENV~2	Max	0.000	0.000	-0.002	-0.0	0.0	0.0
	Min	-0.000	0.000	-0.003	-0.0	0.0	0.0
647	SX (RS)	0.000	0.000	0.000	0.0	0.0	0.0
	SY (RS)	0.000	0.000	0.000	0.0	0.0	0.0
RC ENV~1	Max	0.000	0.000	-0.002	0.0	0.0	0.0
	Min	-0.000	-0.000	-0.004	-0.0	0.0	0.0
RC ENV~2	Max	0.000	0.000	-0.002	-0.0	0.0	0.0
	Min	-0.000	0.000	-0.003	-0.0	0.0	0.0
648	SX (RS)	0.000	0.000	0.000	0.0	0.0	0.0
	SY (RS)	0.000	0.000	0.000	0.0	0.0	0.0
RC ENV~1	Max	0.000	0.000	-0.002	0.0	0.0	0.0
	Min	-0.000	-0.000	-0.004	-0.0	0.0	0.0
RC ENV~2	Max	0.000	0.000	-0.002	-0.0	0.0	0.0
	Min	-0.000	0.000	-0.003	-0.0	0.0	0.0
649	SX (RS)	0.000	0.000	0.000	0.0	0.0	0.0
	SY (RS)	0.000	0.000	0.000	0.0	0.0	0.0
RC ENV~1	Max	0.000	0.000	-0.002	0.0	0.0	0.0
	Min	-0.000	-0.000	-0.004	-0.0	-0.0	0.0
RC ENV~2	Max	0.000	0.000	-0.002	0.0	0.0	0.0

	Min	-0.000	0.000	-0.003	-0.0	-0.0	0.0
650	SX (RS)	0.000	0.000	0.000	0.0	0.0	0.0
	SY (RS)	0.000	0.000	0.000	0.0	0.0	0.0
RC ENV~1	Max	0.000	0.000	-0.002	0.0	0.0	0.0
	Min	-0.000	-0.000	-0.004	-0.0	-0.0	0.0
RC ENV~2	Max	0.000	0.000	-0.002	0.0	0.0	0.0
	Min	-0.000	0.000	-0.003	-0.0	-0.0	0.0
651	SX (RS)	0.000	0.000	0.000	0.0	0.0	0.0
	SY (RS)	0.000	0.000	0.000	0.0	0.0	0.0
RC ENV~1	Max	0.000	0.000	-0.002	0.0	0.0	0.0
	Min	-0.000	-0.000	-0.004	-0.0	-0.0	0.0
RC ENV~2	Max	0.000	0.000	-0.002	-0.0	0.0	0.0
	Min	-0.000	0.000	-0.003	-0.0	-0.0	0.0
652	SX (RS)	0.000	0.000	0.000	0.0	0.0	0.0
	SY (RS)	0.000	0.000	0.000	0.0	0.0	0.0
RC ENV~1	Max	0.000	0.000	-0.002	0.0	0.0	0.0
	Min	-0.000	-0.000	-0.004	-0.0	-0.0	0.0
RC ENV~2	Max	0.000	0.000	-0.002	-0.0	0.0	0.0
	Min	-0.000	0.000	-0.003	-0.0	-0.0	0.0
653	SX (RS)	0.000	0.000	0.000	0.0	0.0	0.0
	SY (RS)	0.000	0.000	0.000	0.0	0.0	0.0
RC ENV~1	Max	0.000	0.000	-0.002	0.0	0.0	0.0
	Min	-0.000	-0.000	-0.004	-0.0	-0.0	0.0
RC ENV~2	Max	0.000	0.000	-0.002	-0.0	0.0	0.0
	Min	-0.000	0.000	-0.003	-0.0	0.0	0.0
654	SX (RS)	0.000	0.000	0.000	0.0	0.0	0.0
	SY (RS)	0.000	0.000	0.000	0.0	0.0	0.0
RC ENV~1	Max	0.000	0.000	-0.002	0.0	0.0	0.0
	Min	-0.000	-0.000	-0.004	-0.0	0.0	0.0
RC ENV~2	Max	0.000	0.000	-0.002	-0.0	0.0	0.0
	Min	-0.000	0.000	-0.003	-0.0	0.0	0.0
655	SX (RS)	0.000	0.000	0.000	0.0	0.0	0.0
	SY (RS)	0.000	0.000	0.000	0.0	0.0	0.0
RC ENV~1	Max	0.000	0.000	-0.002	0.0	0.0	0.0
	Min	-0.000	-0.000	-0.004	-0.0	0.0	0.0
RC ENV~2	Max	0.000	0.000	-0.002	-0.0	0.0	0.0
	Min	-0.000	0.000	-0.003	-0.0	0.0	0.0
656	SX (RS)	0.000	0.000	0.000	0.0	0.0	0.0
	SY (RS)	0.000	0.000	0.000	0.0	0.0	0.0
RC ENV~1	Max	0.000	0.000	-0.002	0.0	0.0	0.0
	Min	-0.000	-0.000	-0.004	-0.0	0.0	0.0
RC ENV~2	Max	0.000	0.000	-0.002	-0.0	0.0	0.0
	Min	-0.000	0.000	-0.003	-0.0	0.0	0.0
657	SX (RS)	0.000	0.000	0.000	0.0	0.0	0.0
	SY (RS)	0.000	0.000	0.000	0.0	0.0	0.0
RC ENV~1	Max	0.000	0.000	-0.002	0.0	0.0	0.0
	Min	-0.000	-0.000	-0.004	-0.0	0.0	0.0
RC ENV~2	Max	0.000	0.000	-0.002	0.0	0.0	0.0
	Min	-0.000	0.000	-0.003	-0.0	0.0	0.0
658	SX (RS)	0.000	0.000	0.000	0.0	0.0	0.0
	SY (RS)	0.000	0.000	0.000	0.0	0.0	0.0
RC ENV~1	Max	0.000	0.000	-0.002	0.0	0.0	0.0
	Min	-0.000	-0.000	-0.004	-0.0	0.0	0.0

	RC ENV~2	Max	0.000	0.000	-0.002	0.0	0.0	0.0
		Min	-0.000	0.000	-0.003	-0.0	0.0	0.0
659	SX (RS)		0.000	0.000	0.000	0.0	0.0	0.0
	SY (RS)		0.000	0.000	0.000	0.0	0.0	0.0
	RC ENV~1	Max	0.000	0.000	-0.002	0.0	0.0	0.0
		Min	-0.000	-0.000	-0.004	-0.0	0.0	0.0
	RC ENV~2	Max	0.000	0.000	-0.003	0.0	0.0	0.0
		Min	-0.000	0.000	-0.003	-0.0	0.0	0.0
660	SX (RS)		0.000	0.000	0.000	0.0	0.0	0.0
	SY (RS)		0.000	0.000	0.000	0.0	0.0	0.0
	RC ENV~1	Max	0.000	0.000	-0.003	0.0	0.0	0.0
		Min	-0.000	-0.000	-0.004	-0.0	0.0	0.0
	RC ENV~2	Max	0.000	0.000	-0.003	0.0	0.0	0.0
		Min	-0.000	0.000	-0.003	-0.0	0.0	0.0
661	SX (RS)		0.000	0.000	0.000	0.0	0.0	0.0
	SY (RS)		0.000	0.000	0.000	0.0	0.0	0.0
	RC ENV~1	Max	0.000	0.000	-0.003	0.0	0.0	0.0
		Min	-0.000	-0.000	-0.005	-0.0	0.0	0.0
	RC ENV~2	Max	0.000	0.000	-0.003	0.0	0.0	0.0
		Min	-0.000	0.000	-0.003	-0.0	0.0	0.0
662	SX (RS)		0.000	0.000	0.000	0.0	0.0	0.0
	SY (RS)		0.000	0.000	0.000	0.0	0.0	0.0
	RC ENV~1	Max	0.000	0.000	-0.003	0.0	0.0	0.0
		Min	-0.000	-0.000	-0.005	-0.0	0.0	0.0
	RC ENV~2	Max	0.000	0.000	-0.003	0.0	0.0	0.0
		Min	-0.000	0.000	-0.003	-0.0	0.0	0.0
663	SX (RS)		0.000	0.000	0.000	0.0	0.0	0.0
	SY (RS)		0.000	0.000	0.000	0.0	0.0	0.0
	RC ENV~1	Max	0.000	0.000	-0.003	0.0	0.0	0.0
		Min	-0.000	-0.000	-0.005	-0.0	0.0	0.0
	RC ENV~2	Max	0.000	0.000	-0.003	0.0	0.0	0.0
		Min	-0.000	0.000	-0.003	-0.0	0.0	0.0
664	SX (RS)		0.000	0.000	0.000	0.0	0.0	0.0
	SY (RS)		0.000	0.000	0.000	0.0	0.0	0.0
	RC ENV~1	Max	0.000	0.000	-0.002	0.0	0.0	0.0
		Min	-0.000	-0.000	-0.004	-0.0	0.0	0.0
	RC ENV~2	Max	0.000	0.000	-0.002	0.0	0.0	0.0
		Min	-0.000	0.000	-0.003	-0.0	0.0	0.0
665	SX (RS)		0.000	0.000	0.000	0.0	0.0	0.0
	SY (RS)		0.000	0.000	0.000	0.0	0.0	0.0
	RC ENV~1	Max	0.000	0.000	-0.002	0.0	0.0	0.0
		Min	-0.000	-0.000	-0.004	-0.0	0.0	0.0
	RC ENV~2	Max	0.000	0.000	-0.002	0.0	0.0	0.0
		Min	-0.000	0.000	-0.003	-0.0	0.0	0.0
666	SX (RS)		0.000	0.000	0.000	0.0	0.0	0.0
	SY (RS)		0.000	0.000	0.000	0.0	0.0	0.0
	RC ENV~1	Max	0.000	0.000	-0.002	0.0	0.0	0.0
		Min	-0.000	-0.000	-0.004	-0.0	0.0	0.0
	RC ENV~2	Max	0.000	0.000	-0.003	0.0	0.0	0.0
		Min	-0.000	0.000	-0.003	-0.0	0.0	0.0
667	SX (RS)		0.000	0.000	0.000	0.0	0.0	0.0
	SY (RS)		0.000	0.000	0.000	0.0	0.0	0.0

	RC ENV~1	Max	0.000	0.000	-0.003	0.0	0.0	0.0
		Min	-0.000	-0.000	-0.005	-0.0	0.0	0.0
	RC ENV~2	Max	0.000	0.000	-0.003	0.0	0.0	0.0
		Min	-0.000	0.000	-0.003	-0.0	0.0	0.0
668		SX (RS)	0.000	0.000	0.000	0.0	0.0	0.0
		SY (RS)	0.000	0.000	0.000	0.0	0.0	0.0
	RC ENV~1	Max	0.000	0.000	-0.003	0.0	0.0	0.0
		Min	-0.000	-0.000	-0.005	-0.0	0.0	0.0
	RC ENV~2	Max	0.000	0.000	-0.003	0.0	0.0	0.0
		Min	-0.000	0.000	-0.003	-0.0	0.0	0.0
669		SX (RS)	0.000	0.000	0.000	0.0	0.0	0.0
		SY (RS)	0.000	0.000	0.000	0.0	0.0	0.0
	RC ENV~1	Max	0.000	0.000	-0.003	0.0	0.0	0.0
		Min	-0.000	-0.000	-0.005	-0.0	0.0	0.0
	RC ENV~2	Max	0.000	0.000	-0.003	0.0	0.0	0.0
		Min	-0.000	0.000	-0.003	-0.0	0.0	0.0
670		SX (RS)	0.000	0.000	0.000	0.0	0.0	0.0
		SY (RS)	0.000	0.000	0.000	0.0	0.0	0.0
	RC ENV~1	Max	0.000	0.000	-0.003	0.0	0.0	0.0
		Min	-0.000	-0.000	-0.005	-0.0	0.0	0.0
	RC ENV~2	Max	0.000	0.000	-0.003	0.0	0.0	0.0
		Min	-0.000	0.000	-0.003	-0.0	0.0	0.0
671		SX (RS)	0.000	0.000	0.000	0.0	0.0	0.0
		SY (RS)	0.000	0.000	0.000	0.0	0.0	0.0
	RC ENV~1	Max	0.000	0.000	-0.002	0.0	0.0	0.0
		Min	-0.000	-0.000	-0.004	-0.0	0.0	0.0
	RC ENV~2	Max	0.000	0.000	-0.002	0.0	0.0	0.0
		Min	-0.000	0.000	-0.003	-0.0	0.0	0.0
672		SX (RS)	0.000	0.000	0.000	0.0	0.0	0.0
		SY (RS)	0.000	0.000	0.000	0.0	0.0	0.0
	RC ENV~1	Max	0.000	0.000	-0.002	0.0	0.0	0.0
		Min	-0.000	-0.000	-0.004	-0.0	0.0	0.0
	RC ENV~2	Max	0.000	0.000	-0.002	0.0	0.0	0.0
		Min	-0.000	0.000	-0.003	-0.0	0.0	0.0
673		SX (RS)	0.000	0.000	0.000	0.0	0.0	0.0
		SY (RS)	0.000	0.000	0.000	0.0	0.0	0.0
	RC ENV~1	Max	0.000	0.000	-0.002	0.0	0.0	0.0
		Min	-0.000	-0.000	-0.005	-0.0	0.0	0.0
	RC ENV~2	Max	0.000	0.000	-0.002	0.0	0.0	0.0
		Min	-0.000	0.000	-0.003	-0.0	0.0	0.0
674		SX (RS)	0.000	0.000	0.000	0.0	0.0	0.0
		SY (RS)	0.000	0.000	0.000	0.0	0.0	0.0
	RC ENV~1	Max	0.000	0.000	-0.002	0.0	0.0	0.0
		Min	-0.000	-0.000	-0.005	-0.0	0.0	0.0
	RC ENV~2	Max	0.000	0.000	-0.003	0.0	0.0	0.0
		Min	-0.000	0.000	-0.003	-0.0	0.0	0.0
675		SX (RS)	0.000	0.000	0.000	0.0	0.0	0.0
		SY (RS)	0.000	0.000	0.000	0.0	0.0	0.0
	RC ENV~1	Max	0.000	0.000	-0.003	0.0	0.0	0.0
		Min	-0.000	-0.000	-0.005	-0.0	0.0	0.0
	RC ENV~2	Max	0.000	0.000	-0.003	0.0	0.0	0.0
		Min	-0.000	0.000	-0.003	-0.0	0.0	0.0
676		SX (RS)	0.000	0.000	0.000	0.0	0.0	0.0

	SY (RS)	0.000	0.000	0.000	0.0	0.0	0.0
RC ENV~1	Max	0.000	0.000	-0.003	0.0	0.0	0.0
	Min	-0.000	-0.000	-0.005	-0.0	0.0	0.0
RC ENV~2	Max	0.000	0.000	-0.003	0.0	0.0	0.0
	Min	-0.000	0.000	-0.003	-0.0	0.0	0.0
677	SX (RS)	0.000	0.000	0.000	0.0	0.0	0.0
	SY (RS)	0.000	0.000	0.000	0.0	0.0	0.0
RC ENV~1	Max	0.000	0.000	-0.003	0.0	0.0	0.0
	Min	-0.000	-0.000	-0.005	-0.0	0.0	0.0
RC ENV~2	Max	0.000	0.000	-0.003	0.0	0.0	0.0
	Min	-0.000	0.000	-0.003	-0.0	0.0	0.0
678	SX (RS)	0.000	0.000	0.000	0.0	0.0	0.0
	SY (RS)	0.000	0.000	0.000	0.0	0.0	0.0
RC ENV~1	Max	0.000	0.000	-0.002	0.0	0.0	0.0
	Min	-0.000	-0.000	-0.004	-0.0	0.0	0.0
RC ENV~2	Max	0.000	0.000	-0.002	0.0	0.0	0.0
	Min	-0.000	0.000	-0.003	-0.0	0.0	0.0
679	SX (RS)	0.000	0.000	0.000	0.0	0.0	0.0
	SY (RS)	0.000	0.000	0.000	0.0	0.0	0.0
RC ENV~1	Max	0.000	0.000	-0.002	0.0	0.0	0.0
	Min	-0.000	-0.000	-0.004	-0.0	0.0	0.0
RC ENV~2	Max	0.000	0.000	-0.002	0.0	0.0	0.0
	Min	-0.000	0.000	-0.003	-0.0	0.0	0.0
680	SX (RS)	0.000	0.000	0.000	0.0	0.0	0.0
	SY (RS)	0.000	0.000	0.000	0.0	0.0	0.0
RC ENV~1	Max	0.000	0.000	-0.002	0.0	0.0	0.0
	Min	-0.000	-0.000	-0.005	-0.0	0.0	0.0
RC ENV~2	Max	0.000	0.000	-0.002	0.0	0.0	0.0
	Min	-0.000	0.000	-0.003	-0.0	0.0	0.0
681	SX (RS)	0.000	0.000	0.000	0.0	0.0	0.0
	SY (RS)	0.000	0.000	0.000	0.0	0.0	0.0
RC ENV~1	Max	0.000	0.000	-0.002	0.0	0.0	0.0
	Min	-0.000	-0.000	-0.005	-0.0	0.0	0.0
RC ENV~2	Max	0.000	0.000	-0.003	0.0	0.0	0.0
	Min	-0.000	0.000	-0.003	-0.0	0.0	0.0
682	SX (RS)	0.000	0.000	0.000	0.0	0.0	0.0
	SY (RS)	0.000	0.000	0.000	0.0	0.0	0.0
RC ENV~1	Max	0.000	0.000	-0.003	0.0	0.0	0.0
	Min	-0.000	-0.000	-0.005	-0.0	0.0	0.0
RC ENV~2	Max	0.000	0.000	-0.003	0.0	0.0	0.0
	Min	-0.000	0.000	-0.003	-0.0	0.0	0.0
683	SX (RS)	0.000	0.000	0.000	0.0	0.0	0.0
	SY (RS)	0.000	0.000	0.000	0.0	0.0	0.0
RC ENV~1	Max	0.000	0.000	-0.003	0.0	0.0	0.0
	Min	-0.000	-0.000	-0.005	-0.0	0.0	0.0
RC ENV~2	Max	0.000	0.000	-0.003	0.0	0.0	0.0
	Min	-0.000	0.000	-0.003	-0.0	0.0	0.0
684	SX (RS)	0.000	0.000	0.000	0.0	0.0	0.0
	SY (RS)	0.000	0.000	0.000	0.0	0.0	0.0
RC ENV~1	Max	0.000	0.000	-0.003	0.0	0.0	0.0
	Min	-0.000	-0.000	-0.005	-0.0	0.0	0.0
RC ENV~2	Max	0.000	0.000	-0.003	0.0	0.0	0.0
	Min	-0.000	0.000	-0.003	-0.0	0.0	0.0

685	SX (RS)	0.000	0.000	0.000	0.0	0.0	0.0
	SY (RS)	0.000	0.000	0.000	0.0	0.0	0.0
RC ENV~1	Max	0.000	0.000	-0.002	0.0	0.0	0.0
	Min	-0.000	-0.000	-0.004	-0.0	0.0	0.0
RC ENV~2	Max	0.000	0.000	-0.002	0.0	0.0	0.0
	Min	-0.000	0.000	-0.003	-0.0	0.0	0.0
686	SX (RS)	0.000	0.000	0.000	0.0	0.0	0.0
	SY (RS)	0.000	0.000	0.000	0.0	0.0	0.0
RC ENV~1	Max	0.000	0.000	-0.002	0.0	0.0	0.0
	Min	-0.000	-0.000	-0.004	-0.0	0.0	0.0
RC ENV~2	Max	0.000	0.000	-0.002	0.0	0.0	0.0
	Min	-0.000	0.000	-0.003	-0.0	0.0	0.0
687	SX (RS)	0.000	0.000	0.000	0.0	0.0	0.0
	SY (RS)	0.000	0.000	0.000	0.0	0.0	0.0
RC ENV~1	Max	0.000	0.000	-0.002	0.0	0.0	0.0
	Min	-0.000	-0.000	-0.005	-0.0	0.0	0.0
RC ENV~2	Max	0.000	0.000	-0.002	0.0	0.0	0.0
	Min	-0.000	0.000	-0.003	-0.0	0.0	0.0
688	SX (RS)	0.000	0.000	0.000	0.0	0.0	0.0
	SY (RS)	0.000	0.000	0.000	0.0	0.0	0.0
RC ENV~1	Max	0.000	0.000	-0.002	0.0	0.0	0.0
	Min	-0.000	-0.000	-0.005	-0.0	0.0	0.0
RC ENV~2	Max	0.000	0.000	-0.003	0.0	0.0	0.0
	Min	-0.000	0.000	-0.003	-0.0	0.0	0.0
689	SX (RS)	0.000	0.000	0.000	0.0	0.0	0.0
	SY (RS)	0.000	0.000	0.000	0.0	0.0	0.0
RC ENV~1	Max	0.000	0.000	-0.002	0.0	0.0	0.0
	Min	-0.000	-0.000	-0.005	-0.0	0.0	0.0
RC ENV~2	Max	0.000	0.000	-0.003	0.0	0.0	0.0
	Min	-0.000	0.000	-0.003	-0.0	0.0	0.0
690	SX (RS)	0.000	0.000	0.000	0.0	0.0	0.0
	SY (RS)	0.000	0.000	0.000	0.0	0.0	0.0
RC ENV~1	Max	0.000	0.000	-0.003	0.0	0.0	0.0
	Min	-0.000	-0.000	-0.005	-0.0	0.0	0.0
RC ENV~2	Max	0.000	0.000	-0.003	0.0	0.0	0.0
	Min	-0.000	0.000	-0.003	-0.0	0.0	0.0
691	SX (RS)	0.000	0.000	0.000	0.0	0.0	0.0
	SY (RS)	0.000	0.000	0.000	0.0	0.0	0.0
RC ENV~1	Max	0.000	0.000	-0.003	0.0	0.0	0.0
	Min	-0.000	-0.000	-0.005	-0.0	0.0	0.0
RC ENV~2	Max	0.000	0.000	-0.003	0.0	0.0	0.0
	Min	-0.000	0.000	-0.004	-0.0	0.0	0.0
692	SX (RS)	0.000	0.000	0.000	0.0	0.0	0.0
	SY (RS)	0.000	0.000	0.000	0.0	0.0	0.0
RC ENV~1	Max	0.000	0.000	-0.002	0.0	0.0	0.0
	Min	-0.000	-0.000	-0.004	-0.0	0.0	0.0
RC ENV~2	Max	0.000	0.000	-0.002	-0.0	0.0	0.0
	Min	-0.000	0.000	-0.003	-0.0	0.0	0.0
693	SX (RS)	0.000	0.000	0.000	0.0	0.0	0.0
	SY (RS)	0.000	0.000	0.000	0.0	0.0	0.0
RC ENV~1	Max	0.000	0.000	-0.002	0.0	0.0	0.0
	Min	-0.000	-0.000	-0.005	-0.0	0.0	0.0

	RC ENV~2	Max	0.000	0.000	-0.002	0.0	0.0	0.0
		Min	-0.000	0.000	-0.003	-0.0	0.0	0.0
694	SX (RS)		0.000	0.000	0.000	0.0	0.0	0.0
	SY (RS)		0.000	0.000	0.000	0.0	0.0	0.0
	RC ENV~1	Max	0.000	0.000	-0.002	0.0	0.0	0.0
		Min	-0.000	-0.000	-0.005	-0.0	0.0	0.0
	RC ENV~2	Max	0.000	0.000	-0.002	0.0	0.0	0.0
		Min	-0.000	0.000	-0.003	-0.0	0.0	0.0
695	SX (RS)		0.000	0.000	0.000	0.0	0.0	0.0
	SY (RS)		0.000	0.000	0.000	0.0	0.0	0.0
	RC ENV~1	Max	0.000	0.000	-0.002	0.0	0.0	0.0
		Min	-0.000	-0.000	-0.005	-0.0	0.0	0.0
	RC ENV~2	Max	0.000	0.000	-0.002	0.0	0.0	0.0
		Min	-0.000	0.000	-0.003	-0.0	0.0	0.0
696	SX (RS)		0.000	0.000	0.000	0.0	0.0	0.0
	SY (RS)		0.000	0.000	0.000	0.0	0.0	0.0
	RC ENV~1	Max	0.000	0.000	-0.002	0.0	0.0	0.0
		Min	-0.000	-0.000	-0.005	-0.0	0.0	0.0
	RC ENV~2	Max	0.000	0.000	-0.003	0.0	0.0	0.0
		Min	-0.000	0.000	-0.003	-0.0	0.0	0.0
697	SX (RS)		0.000	0.000	0.000	0.0	0.0	0.0
	SY (RS)		0.000	0.000	0.000	0.0	0.0	0.0
	RC ENV~1	Max	0.000	0.000	-0.002	0.0	0.0	0.0
		Min	-0.000	-0.000	-0.005	-0.0	0.0	0.0
	RC ENV~2	Max	0.000	0.000	-0.003	0.0	0.0	0.0
		Min	-0.000	0.000	-0.004	-0.0	0.0	0.0
698	SX (RS)		0.000	0.000	0.000	0.0	0.0	0.0
	SY (RS)		0.000	0.000	0.000	0.0	0.0	0.0
	RC ENV~1	Max	0.000	0.000	-0.003	0.0	0.0	0.0
		Min	-0.000	-0.000	-0.005	-0.0	0.0	0.0
	RC ENV~2	Max	0.000	0.000	-0.003	0.0	0.0	0.0
		Min	-0.000	0.000	-0.004	-0.0	0.0	0.0
699	SX (RS)		0.003	0.000	0.000	0.0	0.0	0.0
	SY (RS)		0.000	0.007	0.000	0.0	0.0	0.0
	RC ENV~1	Max	0.003	0.007	-0.003	0.0	0.0	0.0
		Min	-0.003	-0.007	-0.005	0.0	-0.0	-0.0
	RC ENV~2	Max	0.001	0.000	-0.003	0.0	0.0	0.0
		Min	-0.001	-0.000	-0.004	0.0	-0.0	-0.0
700	SX (RS)		0.004	0.000	0.000	0.0	0.0	0.0
	SY (RS)		0.000	0.007	0.000	0.0	0.0	0.0
	RC ENV~1	Max	0.004	0.007	-0.003	0.0	0.0	0.0
		Min	-0.004	-0.007	-0.005	0.0	-0.0	-0.0
	RC ENV~2	Max	0.001	0.000	-0.003	0.0	0.0	0.0
		Min	-0.001	-0.000	-0.004	0.0	-0.0	-0.0
701	SX (RS)		0.005	0.000	0.000	0.0	0.0	0.0
	SY (RS)		0.000	0.007	0.000	0.0	0.0	0.0
	RC ENV~1	Max	0.005	0.007	-0.003	0.0	0.0	0.0
		Min	-0.005	-0.007	-0.005	-0.0	-0.0	-0.0
	RC ENV~2	Max	0.001	0.000	-0.003	0.0	0.0	0.0
		Min	-0.001	-0.000	-0.004	0.0	-0.0	-0.0
702	SX (RS)		0.007	0.000	0.000	0.0	0.0	0.0
	SY (RS)		0.000	0.007	0.000	0.0	0.0	0.0
	RC ENV~1	Max	0.007	0.007	-0.003	0.0	0.0	0.0

	Min	-0.006	-0.007	-0.005	-0.0	-0.0	-0.0
RC ENV~2	Max	0.002	0.000	-0.003	-0.0	0.0	0.0
	Min	-0.001	-0.000	-0.004	-0.0	-0.0	-0.0
703	SX (RS)	0.008	0.000	0.000	0.0	0.0	0.0
	SY (RS)	0.000	0.007	0.000	0.0	0.0	0.0
RC ENV~1	Max	0.008	0.007	-0.003	-0.0	0.0	0.0
	Min	-0.008	-0.007	-0.005	-0.0	-0.0	-0.0
RC ENV~2	Max	0.002	0.000	-0.003	-0.0	0.0	0.0
	Min	-0.001	-0.000	-0.004	-0.0	-0.0	-0.0
704	SX (RS)	0.009	0.000	0.000	0.0	0.0	0.0
	SY (RS)	0.000	0.007	0.000	0.0	0.0	0.0
RC ENV~1	Max	0.009	0.007	-0.003	-0.0	0.0	0.0
	Min	-0.009	-0.007	-0.005	-0.0	-0.0	-0.0
RC ENV~2	Max	0.002	0.000	-0.003	-0.0	0.0	0.0
	Min	-0.001	-0.000	-0.003	-0.0	-0.0	-0.0
705	SX (RS)	0.011	0.000	0.000	0.0	0.0	0.0
	SY (RS)	0.000	0.007	0.000	0.0	0.0	0.0
RC ENV~1	Max	0.011	0.007	-0.002	0.0	0.0	0.0
	Min	-0.011	-0.007	-0.004	0.0	-0.0	-0.0
RC ENV~2	Max	0.002	0.000	-0.003	0.0	0.0	0.0
	Min	-0.002	-0.000	-0.003	0.0	-0.0	-0.0
706	SX (RS)	0.012	0.000	0.000	0.0	0.0	0.0
	SY (RS)	0.000	0.007	0.000	0.0	0.0	0.0
RC ENV~1	Max	0.012	0.007	-0.003	0.0	0.0	0.0
	Min	-0.012	-0.007	-0.005	0.0	-0.0	-0.0
RC ENV~2	Max	0.002	0.000	-0.003	0.0	0.0	0.0
	Min	-0.002	-0.000	-0.003	0.0	-0.0	-0.0
707	SX (RS)	0.012	0.000	0.000	0.0	0.0	0.0
	SY (RS)	0.000	0.007	0.000	0.0	0.0	0.0
RC ENV~1	Max	0.012	0.007	-0.003	0.0	0.0	0.0
	Min	-0.012	-0.007	-0.005	-0.0	-0.0	-0.0
RC ENV~2	Max	0.002	0.000	-0.003	0.0	0.0	0.0
	Min	-0.002	-0.000	-0.004	0.0	-0.0	-0.0
708	SX (RS)	0.012	0.000	0.000	0.0	0.0	0.0
	SY (RS)	0.000	0.007	0.000	0.0	0.0	0.0
RC ENV~1	Max	0.012	0.007	-0.003	0.0	0.0	0.0
	Min	-0.012	-0.007	-0.005	-0.0	-0.0	-0.0
RC ENV~2	Max	0.002	0.000	-0.003	-0.0	0.0	0.0
	Min	-0.002	-0.000	-0.004	-0.0	-0.0	-0.0
709	SX (RS)	0.012	0.000	0.000	0.0	0.0	0.0
	SY (RS)	0.000	0.007	0.000	0.0	0.0	0.0
RC ENV~1	Max	0.012	0.007	-0.003	-0.0	0.0	0.0
	Min	-0.012	-0.007	-0.005	-0.0	-0.0	-0.0
RC ENV~2	Max	0.002	0.000	-0.003	-0.0	0.0	0.0
	Min	-0.002	-0.000	-0.003	-0.0	-0.0	-0.0
710	SX (RS)	0.011	0.000	0.000	0.0	0.0	0.0
	SY (RS)	0.000	0.007	0.000	0.0	0.0	0.0
RC ENV~1	Max	0.011	0.007	-0.003	-0.0	0.0	0.0
	Min	-0.011	-0.007	-0.004	-0.0	-0.0	-0.0
RC ENV~2	Max	0.002	0.000	-0.003	-0.0	0.0	0.0
	Min	-0.002	-0.000	-0.003	-0.0	-0.0	-0.0
711	SX (RS)	0.009	0.000	0.000	0.0	0.0	0.0
	SY (RS)	0.000	0.007	0.000	0.0	0.0	0.0

	RC ENV~1	Max	0.009	0.007	-0.003	0.0	0.0	0.0
		Min	-0.009	-0.007	-0.004	0.0	-0.0	-0.0
	RC ENV~2	Max	0.002	0.000	-0.003	0.0	0.0	0.0
		Min	-0.002	-0.000	-0.003	0.0	-0.0	-0.0
712	SX (RS)		0.008	0.000	0.000	0.0	0.0	0.0
	SY (RS)		0.000	0.007	0.000	0.0	0.0	0.0
	RC ENV~1	Max	0.008	0.007	-0.003	0.0	0.0	0.0
		Min	-0.008	-0.007	-0.005	0.0	-0.0	-0.0
	RC ENV~2	Max	0.002	0.000	-0.003	0.0	0.0	0.0
		Min	-0.001	-0.000	-0.004	0.0	-0.0	-0.0
713	SX (RS)		0.007	0.000	0.000	0.0	0.0	0.0
	SY (RS)		0.000	0.007	0.000	0.0	0.0	0.0
	RC ENV~1	Max	0.007	0.007	-0.003	0.0	0.0	0.0
		Min	-0.006	-0.007	-0.005	-0.0	-0.0	-0.0
	RC ENV~2	Max	0.001	0.000	-0.003	0.0	0.0	0.0
		Min	-0.001	-0.000	-0.004	0.0	-0.0	-0.0
714	SX (RS)		0.005	0.000	0.000	0.0	0.0	0.0
	SY (RS)		0.000	0.007	0.000	0.0	0.0	0.0
	RC ENV~1	Max	0.005	0.007	-0.003	0.0	0.0	0.0
		Min	-0.005	-0.007	-0.005	-0.0	-0.0	-0.0
	RC ENV~2	Max	0.001	0.000	-0.003	-0.0	0.0	0.0
		Min	-0.001	-0.000	-0.004	-0.0	-0.0	-0.0
715	SX (RS)		0.004	0.000	0.000	0.0	0.0	0.0
	SY (RS)		0.000	0.007	0.000	0.0	0.0	0.0
	RC ENV~1	Max	0.004	0.007	-0.003	-0.0	0.0	0.0
		Min	-0.004	-0.007	-0.005	-0.0	-0.0	-0.0
	RC ENV~2	Max	0.001	0.000	-0.003	-0.0	0.0	0.0
		Min	-0.001	-0.000	-0.004	-0.0	-0.0	-0.0
716	SX (RS)		0.003	0.000	0.000	0.0	0.0	0.0
	SY (RS)		0.000	0.007	0.000	0.0	0.0	0.0
	RC ENV~1	Max	0.003	0.007	-0.003	-0.0	0.0	0.0
		Min	-0.003	-0.007	-0.004	-0.0	-0.0	-0.0
	RC ENV~2	Max	0.001	0.000	-0.003	-0.0	0.0	0.0
		Min	-0.001	-0.000	-0.003	-0.0	-0.0	-0.0

BEAM ELEMENT FORCES & MOMENTS DEFAULT PRINTOUT Unit System : kN , m

ELEM	MAT	SEC	LC	PT	AXIAL	SHEAR-y	SHEAR-z	TORSION	MOMENT-y	MOMENT-z
189	1	1	SX(RS)	I	7.0	0.8	10.6	0.0	11.8	1.5
				J	7.0	0.8	10.6	0.0	6.6	1.1
			SY(RS)	I	4.7	7.7	0.7	0.0	1.1	10.2
				J	4.7	7.7	0.7	0.0	0.7	6.4
			RC ENV~1 Max	I	-11.0	4.9	11.8	0.0	15.0	4.4
				J	-12.1	4.9	11.8	0.0	9.1	2.0
			Min	I	-36.8	-10.6	-9.4	-0.0	-8.7	-16.0
				J	-38.2	-10.6	-9.4	-0.0	-4.0	-10.7
			RC ENV~2 Max	I	-16.9	-2.0	3.6	0.0	7.1	-4.1
				J	-18.0	-2.0	4.1	0.0	5.2	-3.1
			Min	I	-26.9	-5.0	-0.3	0.0	0.7	-10.2
				J	-28.0	-5.0	-0.8	0.0	1.0	-7.7
190	1	1	SX(RS)	I	0.2	0.1	9.9	0.0	4.4	0.1
				J	0.2	0.1	9.9	0.0	1.3	0.1
			SY(RS)	I	1.8	10.9	2.9	0.0	2.9	15.8
				J	1.8	10.9	2.9	0.0	1.5	10.4
			RC ENV~1 Max	I	-26.1	10.7	5.4	0.0	2.4	16.0
				J	-27.2	10.7	5.4	0.0	1.7	10.6
			Min	I	-66.0	-11.0	-14.5	-0.0	-6.7	-15.7
				J	-67.5	-11.0	-14.5	-0.0	-1.2	-10.2
			RC ENV~2 Max	I	-21.3	0.0	-3.3	0.0	-0.7	0.7
				J	-22.5	0.0	-2.3	0.0	0.7	0.7
			Min	I	-47.7	-0.3	-9.0	0.0	-4.7	-0.1
				J	-48.8	-0.3	-9.6	0.0	-0.2	0.1
191	1	1	SX(RS)	I	0.2	0.2	9.9	0.0	4.4	0.2
				J	0.2	0.2	9.9	0.0	1.3	0.2
			SY(RS)	I	1.8	10.9	2.9	0.0	2.9	15.8
				J	1.8	10.9	2.9	0.0	1.5	10.4
			RC ENV~1 Max	I	-28.1	10.4	5.5	0.0	2.4	14.9
				J	-29.2	10.4	5.5	0.0	1.7	9.7
			Min	I	-75.1	-11.4	-14.4	-0.0	-6.6	-16.8
				J	-76.6	-11.4	-14.4	-0.0	-1.2	-11.1
			RC ENV~2 Max	I	-27.3	-0.5	-3.3	-0.0	-0.6	-0.9
				J	-28.4	-0.5	-2.2	-0.0	0.8	-0.7
			Min	I	-53.7	-0.8	-8.9	-0.0	-4.7	-1.7
				J	-54.8	-0.8	-9.5	-0.0	-0.2	-1.3
192	1	1	SX(RS)	I	7.0	0.8	10.6	0.0	11.9	1.5
				J	7.0	0.8	10.6	0.0	6.6	1.1
			SY(RS)	I	4.7	7.7	0.7	0.0	1.1	10.2
				J	4.7	7.7	0.7	0.0	0.7	6.4
			RC ENV~1 Max	I	-14.2	11.2	11.8	0.0	15.0	16.5
				J	-15.3	11.2	11.8	0.0	9.1	11.1
			Min	I	-47.0	-4.3	-9.5	-0.0	-8.8	-3.9
				J	-48.4	-4.3	-9.5	-0.0	-4.1	-1.8
			RC ENV~2 Max	I	-20.9	5.6	3.1	-0.0	6.5	10.8
				J	-22.0	5.6	3.7	-0.0	4.8	8.0
			Min	I	-33.7	2.6	-0.7	-0.0	0.1	4.7
				J	-34.9	2.6	-1.3	-0.0	0.6	3.4
193	1	1	SX(RS)	I	7.0	0.8	10.6	0.0	11.8	1.5
				J	7.0	0.8	10.6	0.0	6.6	1.1
			SY(RS)	I	4.7	7.7	0.7	0.0	1.1	10.2
				J	4.7	7.7	0.7	0.0	0.7	6.4
			RC ENV~1 Max	I	-14.0	4.6	9.4	0.0	8.8	4.1
				J	-15.2	4.6	9.4	0.0	4.1	1.9

			Min	I	-45.9	-10.9	-11.8	-0.0	-14.9	-16.3
				J	-47.4	-10.9	-11.8	-0.0	-9.1	-10.9
			RC ENV~2 Max	I	-21.0	-2.5	0.9	-0.0	0.1	-4.8
				J	-22.1	-2.5	1.2	-0.0	-0.5	-3.6
			Min	I	-33.0	-5.0	-4.4	-0.0	-7.4	-10.0
				J	-34.1	-5.0	-4.7	-0.0	-5.1	-7.5
194	1	1	SX(RS)	I	0.2	0.1	9.9	0.0	4.4	0.1
				J	0.2	0.1	9.9	0.0	1.3	0.1
			SY(RS)	I	1.8	10.9	2.9	0.0	2.9	15.8
				J	1.8	10.9	2.9	0.0	1.5	10.4
			RC ENV~1 Max	I	-28.6	11.1	14.4	0.0	6.4	16.4
				J	-29.8	11.1	14.4	0.0	1.2	10.8
			Min	I	-73.8	-10.7	-5.4	-0.0	-2.4	-15.3
				J	-75.2	-10.7	-5.4	-0.0	-1.7	-10.0
			RC ENV~2 Max	I	-29.6	0.9	8.7	-0.0	4.4	1.6
				J	-30.7	0.9	9.0	-0.0	-0.0	1.1
			Min	I	-52.8	0.2	3.4	-0.0	1.3	0.5
				J	-54.0	0.2	2.8	-0.0	-0.3	0.4
195	1	1	SX(RS)	I	0.2	0.2	9.9	0.0	4.4	0.2
				J	0.2	0.2	9.9	0.0	1.3	0.2
			SY(RS)	I	1.8	10.9	2.9	0.0	2.9	15.8
				J	1.8	10.9	2.9	0.0	1.5	10.4
			RC ENV~1 Max	I	-28.5	10.6	14.5	0.0	6.4	15.2
				J	-29.6	10.6	14.5	0.0	1.2	9.9
			Min	I	-73.9	-11.1	-5.4	-0.0	-2.4	-16.5
				J	-75.4	-11.1	-5.4	-0.0	-1.7	-10.9
			RC ENV~2 Max	I	-29.4	-0.2	8.8	0.0	4.4	-0.6
				J	-30.5	-0.2	9.2	0.0	-0.1	-0.5
			Min	I	-52.9	-0.6	3.6	0.0	1.4	-1.3
				J	-54.0	-0.6	3.0	0.0	-0.3	-1.0
196	1	1	SX(RS)	I	7.0	0.8	10.6	0.0	11.9	1.5
				J	7.0	0.8	10.6	0.0	6.6	1.1
			SY(RS)	I	4.7	7.7	0.7	0.0	1.1	10.2
				J	4.7	7.7	0.7	0.0	0.7	6.4
			RC ENV~1 Max	I	-14.1	11.1	9.5	0.0	8.7	16.4
				J	-15.3	11.1	9.5	0.0	4.1	10.9
			Min	I	-45.6	-4.4	-11.8	-0.0	-15.0	-4.0
				J	-47.1	-4.4	-11.8	-0.0	-9.2	-1.9
			RC ENV~2 Max	I	-21.1	5.0	1.4	0.0	0.3	9.9
				J	-22.2	5.0	1.7	0.0	-0.5	7.4
			Min	I	-32.8	2.4	-4.0	0.0	-7.1	4.7
				J	-34.0	2.4	-4.3	0.0	-5.1	3.5
197	1	1	SX(RS)	I	0.0	0.0	5.1	0.0	12.2	0.0
				J	0.0	0.0	5.1	0.0	9.7	0.0
			SY(RS)	I	11.8	9.8	0.0	0.0	0.0	20.2
				J	11.8	9.8	0.0	0.0	0.0	15.2
			RC ENV~1 Max	I	-17.6	7.6	5.1	0.0	12.3	13.3
				J	-18.7	7.6	5.1	0.0	9.7	9.5
			Min	I	-54.5	-12.1	-5.0	-0.0	-12.1	-27.1
				J	-55.9	-12.1	-5.0	-0.0	-9.6	-21.0
			RC ENV~2 Max	I	-28.0	-2.1	2.0	0.0	4.1	-6.3
				J	-29.1	-2.1	2.0	0.0	3.1	-5.3
			Min	I	-40.3	-4.0	-1.5	-0.0	-3.2	-12.1
				J	-41.4	-4.0	-1.5	-0.0	-2.5	-10.1
198	1	1	SX(RS)	I	0.0	0.0	9.1	0.0	9.9	0.0
				J	0.0	0.0	9.1	0.0	5.3	0.0
			SY(RS)	I	4.3	13.5	0.0	0.0	0.0	31.0
				J	4.3	13.5	0.0	0.0	0.0	24.3
			RC ENV~1 Max	I	-42.2	13.7	9.1	0.0	9.9	32.0

					J	-43.3	13.7	9.1	0.0	5.3	25.1
				Min	I	-109.9	-13.3	-9.0	-0.0	-9.9	-30.1
					J	-111.4	-13.3	-9.0	-0.0	-5.4	-23.5
			RC ENV~2	Max	I	-44.0	0.6	1.8	0.0	1.7	1.9
					J	-45.2	0.6	1.8	0.0	0.8	1.6
				Min	I	-79.5	0.2	-1.7	-0.0	-1.7	0.9
					J	-80.6	0.2	-1.7	-0.0	-0.9	0.8
199	1	1	SX(RS)		I	0.0	0.0	9.1	0.0	9.9	0.0
					J	0.0	0.0	9.1	0.0	5.3	0.0
			SY(RS)		I	4.3	13.5	0.0	0.0	0.0	31.0
					J	4.3	13.5	0.0	0.0	0.0	24.3
			RC ENV~1	Max	I	-41.6	13.0	9.1	0.0	9.9	29.7
					J	-42.7	13.0	9.1	0.0	5.3	23.2
				Min	I	-109.5	-13.9	-9.1	-0.0	-9.9	-32.4
					J	-111.0	-13.9	-9.1	-0.0	-5.3	-25.4
			RC ENV~2	Max	I	-43.6	-0.4	1.7	0.0	1.7	-1.3
					J	-44.8	-0.4	1.7	0.0	0.8	-1.1
				Min	I	-79.1	-0.7	-1.8	-0.0	-1.7	-2.1
					J	-80.2	-0.7	-1.8	-0.0	-0.8	-1.8
200	1	1	SX(RS)		I	0.0	0.0	5.1	0.0	12.3	0.0
					J	0.0	0.0	5.1	0.0	9.7	0.0
			SY(RS)		I	11.8	9.8	0.0	0.0	0.0	20.2
					J	11.8	9.8	0.0	0.0	0.0	15.2
			RC ENV~1	Max	I	-17.8	12.3	5.1	0.0	12.2	27.4
					J	-18.9	12.3	5.1	0.0	9.7	21.2
				Min	I	-55.6	-7.4	-5.1	-0.0	-12.3	-12.9
					J	-57.1	-7.4	-5.1	-0.0	-9.7	-9.3
			RC ENV~2	Max	I	-28.9	4.2	1.7	0.0	3.6	12.3
					J	-30.1	4.2	1.7	0.0	2.8	10.3
				Min	I	-41.0	2.2	-1.7	-0.0	-3.7	6.6
					J	-42.1	2.2	-1.7	-0.0	-2.8	5.4
201	1	2	SX(RS)		I	4.6	4.9	0.2	4.4	0.7	5.7
					J	4.6	4.9	0.2	4.4	0.6	3.3
			SY(RS)		I	7.8	2.5	5.3	0.9	11.4	10.7
					J	7.8	2.5	5.3	0.9	8.5	9.8
			RC ENV~1	Max	I	4.2	12.2	-6.5	2.4	6.8	14.0
					J	4.2	9.8	-2.8	2.4	9.4	11.2
				Min	I	-11.5	-0.9	-27.9	-6.6	-15.9	-7.3
					J	-11.5	-1.8	-19.0	-6.6	-7.7	-8.3
			RC ENV~2	Max	I	-1.7	8.7	-9.0	-0.6	-3.6	8.0
					J	-1.7	7.0	-6.1	-0.6	1.7	3.7
				Min	I	-7.3	2.2	-20.2	-4.7	-7.5	1.0
					J	-7.3	1.6	-13.8	-4.7	0.6	-0.0
202	1	2	SX(RS)		I	4.6	5.6	0.0	0.0	0.1	2.4
					J	4.6	5.6	0.0	0.0	0.1	4.6
			SY(RS)		I	4.7	1.0	3.8	2.0	7.2	2.6
					J	4.7	1.0	3.8	2.0	5.1	2.1
			RC ENV~1	Max	I	0.9	8.5	-9.7	2.0	-2.1	1.6
					J	0.9	7.7	-5.9	2.0	2.1	2.3
				Min	I	-10.0	-2.8	-31.7	-1.9	-21.6	-3.7
					J	-10.0	-3.6	-22.8	-1.9	-8.1	-7.5
			RC ENV~2	Max	I	-2.0	5.9	-10.4	0.1	-7.3	-0.3
					J	-2.0	4.2	-7.5	0.1	-2.5	-1.1
				Min	I	-7.2	1.8	-22.9	0.0	-15.6	-2.6
					J	-7.2	1.3	-16.5	0.0	-4.9	-5.3
203	1	2	SX(RS)		I	4.6	2.7	0.2	4.4	0.2	2.4
					J	4.6	2.7	0.2	4.4	0.2	2.8
			SY(RS)		I	5.9	3.3	5.3	0.9	8.7	2.6
					J	5.9	3.3	5.3	0.9	5.9	4.3

			RC ENV~1 Max	I	1.6	5.0	-8.9	6.7	-0.2	1.6
				J	1.6	4.2	-5.1	6.7	3.6	2.6
			Min	I	-11.2	-1.7	-34.0	-2.4	-21.8	-3.6
				J	-11.2	-2.5	-25.1	-2.4	-8.1	-6.0
			RC ENV~2 Max	I	-2.5	3.0	-10.7	4.7	-6.7	-0.2
				J	-2.5	1.4	-7.9	4.7	-1.7	-0.8
			Min	I	-8.0	1.4	-24.6	0.7	-15.7	-2.5
				J	-8.0	0.7	-18.1	0.7	-4.1	-3.7
204	1	2	SX(RS)	I	4.6	4.9	0.2	4.4	0.7	5.7
				J	4.6	4.9	0.2	4.4	0.6	3.3
			SY(RS)	I	7.8	2.5	5.3	0.9	11.4	10.7
				J	7.8	2.5	5.3	0.9	8.5	9.8
			RC ENV~1 Max	I	3.8	0.9	-6.7	6.4	6.6	7.1
				J	3.8	1.7	-2.9	6.4	9.2	8.2
			Min	I	-11.8	-11.7	-26.9	-2.4	-16.2	-14.2
				J	-11.8	-9.4	-18.3	-2.4	-7.8	-11.4
			RC ENV~2 Max	I	-2.7	-3.2	-10.0	4.5	-3.7	-2.6
				J	-2.7	-2.5	-6.8	4.5	1.7	-1.1
			Min	I	-7.2	-8.3	-19.6	1.4	-7.2	-7.8
				J	-7.2	-6.7	-13.3	1.4	0.7	-3.7
205	1	2	SX(RS)	I	4.6	5.6	0.0	0.0	0.1	2.4
				J	4.6	5.6	0.0	0.0	0.1	4.6
			SY(RS)	I	4.7	1.0	3.8	2.0	7.2	2.6
				J	4.7	1.0	3.8	2.0	5.1	2.1
			RC ENV~1 Max	I	0.8	2.8	-9.4	2.0	-1.5	3.6
				J	0.8	3.6	-5.6	2.0	2.6	6.9
			Min	I	-8.9	-8.5	-30.0	-1.9	-19.7	-1.6
				J	-8.9	-7.7	-21.4	-1.9	-7.7	-2.2
			RC ENV~2 Max	I	-2.1	-2.2	-11.1	0.1	-7.2	2.2
				J	-2.1	-1.6	-7.9	0.1	-2.1	4.9
			Min	I	-6.5	-5.6	-21.8	0.0	-14.3	1.0
				J	-6.5	-4.0	-15.5	0.0	-4.2	2.1
206	1	2	SX(RS)	I	4.6	2.7	0.2	4.4	0.2	2.4
				J	4.6	2.7	0.2	4.4	0.2	2.8
			SY(RS)	I	5.9	3.3	5.3	0.9	8.7	2.6
				J	5.9	3.3	5.3	0.9	5.9	4.3
			RC ENV~1 Max	I	1.8	1.7	-8.9	2.4	-0.4	3.7
				J	1.8	2.5	-5.2	2.4	3.5	6.0
			Min	I	-10.0	-5.0	-33.2	-6.4	-21.9	-1.6
				J	-10.0	-4.2	-24.6	-6.4	-8.2	-2.6
			RC ENV~2 Max	I	-2.5	-1.4	-12.3	-1.3	-8.1	2.2
				J	-2.5	-0.7	-9.1	-1.3	-2.3	3.4
			Min	I	-7.1	-3.1	-24.0	-4.3	-15.8	1.0
				J	-7.1	-1.5	-17.8	-4.3	-4.4	1.5
207	1	2	SX(RS)	I	9.4	3.8	4.4	1.6	13.8	5.9
				J	9.4	3.8	4.4	1.6	11.4	5.1
			SY(RS)	I	2.5	6.6	0.1	2.9	0.3	12.1
				J	2.5	6.6	0.1	2.9	0.2	8.6
			RC ENV~1 Max	I	2.6	5.8	0.2	3.0	12.6	8.5
				J	2.9	5.8	1.3	3.0	12.2	5.4
			Min	I	-16.4	-7.4	-8.6	-2.8	-15.0	-15.7
				J	-15.9	-7.4	-7.5	-2.8	-10.6	-11.7
			RC ENV~2 Max	I	-6.7	0.3	-2.9	0.2	2.9	-1.1
				J	-6.3	0.3	-1.8	0.2	4.1	-1.2
			Min	I	-11.8	-2.2	-5.9	-0.0	-5.9	-8.4
				J	-11.4	-2.2	-4.7	-0.0	-3.0	-7.2
208	1	2	SX(RS)	I	8.2	3.6	5.1	1.6	9.4	15.4
				J	8.2	3.6	5.1	1.6	6.7	13.6
			SY(RS)	I	2.5	4.4	0.1	2.9	0.4	16.0
				J	2.5	4.4	0.1	2.9	0.3	13.7

			RC ENV~1 Max	I	4.8	5.2	-1.2	2.8	3.3	16.4
				J	4.4	5.2	-0.1	2.8	3.7	13.6
			Min	I	-13.8	-3.5	-11.3	-3.1	-15.6	-15.7
				J	-14.3	-3.5	-10.2	-3.1	-9.8	-13.8
			RC ENV~2 Max	I	-1.9	2.2	-4.8	-0.1	-3.4	3.0
				J	-2.3	2.2	-3.7	-0.1	-1.1	1.9
			Min	I	-9.6	0.2	-7.7	-0.3	-8.8	-1.8
				J	-10.0	0.2	-6.5	-0.3	-5.0	-1.9
209	1	2	SX(RS)	I	8.2	3.6	5.1	1.6	9.4	15.4
				J	8.2	3.6	5.1	1.6	6.8	13.6
			SY(RS)	I	2.5	4.4	0.1	2.9	0.4	16.0
				J	2.5	4.4	0.1	2.9	0.3	13.7
			RC ENV~1 Max	I	4.8	5.2	-1.2	2.8	3.4	16.4
				J	4.4	5.2	-0.0	2.8	3.7	13.6
			Min	I	-11.6	-3.5	-11.3	-3.1	-15.5	-15.6
				J	-12.0	-3.5	-10.2	-3.1	-9.8	-13.8
			RC ENV~2 Max	I	-2.9	2.4	-4.9	-0.1	-3.5	3.5
				J	-3.3	2.4	-3.7	-0.1	-1.1	2.2
			Min	I	-7.9	-0.1	-7.8	-0.4	-9.0	-2.0
				J	-8.3	-0.1	-6.6	-0.4	-5.1	-2.0
210	1	2	SX(RS)	I	8.2	3.6	5.1	1.6	9.4	15.4
				J	8.2	3.6	5.1	1.6	6.8	13.6
			SY(RS)	I	2.5	4.4	0.1	2.9	0.4	16.0
				J	2.5	4.4	0.1	2.9	0.3	13.7
			RC ENV~1 Max	I	4.8	3.6	-1.2	3.0	3.4	15.8
				J	4.4	3.6	0.0	3.0	3.8	13.9
			Min	I	-12.8	-5.2	-11.3	-2.8	-15.5	-16.3
				J	-13.3	-5.2	-10.1	-2.8	-9.7	-13.5
			RC ENV~2 Max	I	-1.3	-0.1	-4.9	0.3	-3.4	2.0
				J	-1.7	-0.1	-3.7	0.3	-1.1	2.0
			Min	I	-9.0	-2.1	-7.7	0.0	-8.9	-2.8
				J	-9.4	-2.1	-6.6	0.0	-5.0	-1.8
211	1	1	SX(RS)	I	7.0	0.8	10.8	0.0	6.6	1.1
				J	7.0	0.8	10.8	0.0	1.7	0.7
			SY(RS)	I	4.7	8.1	0.7	0.0	0.7	6.4
				J	4.7	8.1	0.7	0.0	0.4	2.6
			RC ENV~1 Max	I	-12.1	5.3	12.0	0.0	9.1	2.0
				J	-13.2	5.3	12.0	0.0	4.3	-0.3
			Min	I	-38.2	-11.0	-9.6	-0.0	-4.0	-10.7
				J	-39.7	-11.0	-9.6	-0.0	0.2	-7.2
			RC ENV~2 Max	I	-18.0	-2.0	4.1	0.0	5.2	-3.1
				J	-19.1	-2.0	4.6	0.0	3.1	-2.1
			Min	I	-28.0	-5.0	-0.8	0.0	1.0	-7.7
				J	-29.1	-5.0	-1.3	0.0	1.5	-5.2
212	1	1	SX(RS)	I	7.0	0.8	10.9	0.0	1.7	0.7
				J	7.0	0.8	10.9	0.0	4.7	0.3
			SY(RS)	I	4.7	8.4	0.7	0.0	0.4	2.6
				J	4.7	8.4	0.7	0.0	0.1	2.6
			RC ENV~1 Max	I	-13.2	5.6	12.1	0.0	4.3	-0.3
				J	-14.3	5.6	12.1	0.0	6.1	1.1
			Min	I	-39.7	-11.3	-9.8	-0.0	0.2	-7.2
				J	-41.2	-11.3	-9.8	-0.0	-3.3	-4.1
			RC ENV~2 Max	I	-19.1	-2.0	4.6	0.0	3.1	-2.1
				J	-20.3	-2.0	5.1	0.0	2.5	-1.1
			Min	I	-29.1	-5.0	-1.3	0.0	1.5	-5.2
				J	-30.3	-5.0	-1.9	0.0	0.4	-2.7
213	1	1	SX(RS)	I	7.0	0.8	11.0	0.0	4.7	0.3
				J	7.0	0.8	11.0	0.0	10.1	0.1
			SY(RS)	I	4.7	8.6	0.7	0.0	0.1	2.6

				J	4.7	8.6	0.7	0.0	0.3	6.6
			RC ENV~1 Max	I	-14.3	5.8	12.2	0.0	6.1	1.1
				J	-15.5	5.8	12.2	0.0	10.9	6.5
			Min	I	-41.2	-11.5	-9.9	-0.0	-3.3	-4.1
				J	-42.6	-11.5	-9.9	-0.0	-9.3	-6.6
			RC ENV~2 Max	I	-20.3	-2.0	5.1	0.0	2.5	-1.1
				J	-21.4	-2.0	5.7	0.0	3.4	-0.1
			Min	I	-30.3	-5.0	-1.9	0.0	0.4	-2.7
				J	-31.4	-5.0	-2.4	0.0	-2.1	-0.2
214	1	1	SX(RS)	I	7.0	0.8	11.1	0.0	10.1	0.1
				J	7.0	0.8	11.1	0.0	15.6	0.5
			SY(RS)	I	4.7	8.8	0.7	0.0	0.3	6.6
				J	4.7	8.8	0.7	0.0	0.7	10.9
			RC ENV~1 Max	I	-15.5	5.9	12.3	0.0	10.9	6.5
				J	-16.6	5.9	12.3	0.0	15.8	12.2
			Min	I	-42.6	-11.6	-9.9	-0.0	-9.3	-6.6
				J	-44.1	-11.6	-9.9	-0.0	-15.4	-9.5
			RC ENV~2 Max	I	-21.4	-2.0	5.7	0.0	3.4	-0.1
				J	-22.5	-2.0	6.2	0.0	4.7	2.3
			Min	I	-31.4	-5.0	-2.4	0.0	-2.1	-0.2
				J	-32.5	-5.0	-2.9	0.0	-5.1	0.9
215	1	1	SX(RS)	I	7.0	0.8	11.1	0.0	15.6	0.5
				J	7.0	0.8	11.1	0.0	21.1	0.9
			SY(RS)	I	4.7	8.8	0.7	0.0	0.7	10.9
				J	4.7	8.8	0.7	0.0	1.0	15.2
			RC ENV~1 Max	I	-16.6	6.0	12.3	0.0	15.8	12.2
				J	-17.7	6.0	12.3	0.0	20.8	18.0
			Min	I	-44.1	-11.7	-10.0	-0.0	-15.4	-9.5
				J	-45.6	-11.7	-10.0	-0.0	-21.5	-12.5
			RC ENV~2 Max	I	-22.5	-2.0	6.2	0.0	4.7	2.3
				J	-23.6	-2.0	6.7	0.0	6.3	4.8
			Min	I	-32.5	-5.0	-2.9	0.0	-5.1	0.9
				J	-33.6	-5.0	-3.4	0.0	-8.3	1.9
216	1	1	SX(RS)	I	0.2	0.1	10.3	0.0	1.3	0.1
				J	0.2	0.1	10.3	0.0	6.0	0.1
			SY(RS)	I	1.8	11.3	3.0	0.0	1.5	10.4
				J	1.8	11.3	3.0	0.0	0.1	4.8
			RC ENV~1 Max	I	-27.2	11.1	5.8	0.0	1.7	10.6
				J	-28.3	11.1	5.8	0.0	8.6	5.1
			Min	I	-67.5	-11.4	-14.9	-0.0	-1.2	-10.2
				J	-68.9	-11.4	-14.9	-0.0	-3.4	-4.5
			RC ENV~2 Max	I	-22.5	0.0	-2.3	0.0	0.7	0.7
				J	-23.6	0.0	-1.2	0.0	4.9	0.6
			Min	I	-48.8	-0.3	-9.6	0.0	-0.2	0.1
				J	-50.0	-0.3	-10.2	0.0	1.6	0.2
217	1	1	SX(RS)	I	0.2	0.1	10.6	0.0	6.0	0.1
				J	0.2	0.1	10.6	0.0	11.2	0.1
			SY(RS)	I	1.8	11.6	3.1	0.0	0.1	4.8
				J	1.8	11.6	3.1	0.0	1.6	1.0
			RC ENV~1 Max	I	-28.3	11.4	6.0	0.0	8.6	5.1
				J	-29.4	11.4	6.0	0.0	16.1	1.4
			Min	I	-68.9	-11.7	-15.2	-0.0	-3.4	-4.5
				J	-70.4	-11.7	-15.3	-0.0	-6.4	-0.6
			RC ENV~2 Max	I	-23.6	0.0	-1.2	0.0	4.9	0.6
				J	-24.7	0.0	-0.2	0.0	10.1	0.6
			Min	I	-50.0	-0.3	-10.2	0.0	1.6	0.2
				J	-51.1	-0.3	-10.8	0.0	2.0	0.3
218	1	1	SX(RS)	I	0.2	0.1	10.8	0.0	11.2	0.1
				J	0.2	0.1	10.8	0.0	16.6	0.1

			SY(RS)	I	1.8	11.8	3.1	0.0	1.6	1.0
				J	1.8	11.8	3.1	0.0	3.1	6.9
			RC ENV~1 Max	I	-29.4	11.6	6.2	0.0	16.1	1.4
				J	-30.6	11.6	6.2	0.0	23.7	7.4
			Min	I	-70.4	-11.9	-15.3	-0.0	-6.4	-0.6
				J	-71.9	-11.9	-16.8	-0.0	-9.5	-6.4
			RC ENV~2 Max	I	-24.7	0.0	-0.2	0.0	10.1	0.6
				J	-25.8	0.0	0.9	0.0	15.7	0.6
			Min	I	-51.1	-0.3	-10.8	0.0	2.0	0.3
				J	-52.2	-0.3	-11.8	0.0	1.8	0.4
219	1	1	SX(RS)	I	0.2	0.1	10.9	0.0	16.6	0.1
				J	0.2	0.1	10.9	0.0	22.0	0.1
			SY(RS)	I	1.8	11.9	3.1	0.0	3.1	6.9
				J	1.8	11.9	3.1	0.0	4.7	12.8
			RC ENV~1 Max	I	-30.6	11.7	6.3	0.0	23.7	7.4
				J	-31.7	11.7	6.3	0.0	31.4	13.4
			Min	I	-71.9	-12.0	-16.8	-0.0	-9.5	-6.4
				J	-73.3	-12.0	-18.3	-0.0	-12.6	-12.3
			RC ENV~2 Max	I	-25.8	0.0	0.9	0.0	15.7	0.6
				J	-27.0	0.0	1.9	0.0	21.6	0.6
			Min	I	-52.2	-0.3	-11.8	0.0	1.8	0.4
				J	-53.3	-0.3	-12.8	0.0	1.1	0.5
220	1	1	SX(RS)	I	0.2	0.1	10.9	0.0	22.0	0.1
				J	0.2	0.1	10.9	0.0	27.5	0.2
			SY(RS)	I	1.8	11.9	3.1	0.0	4.7	12.8
				J	1.8	11.9	3.1	0.0	6.3	18.8
			RC ENV~1 Max	I	-31.7	11.8	6.3	0.0	31.4	13.4
				J	-32.8	11.8	6.3	0.0	39.6	19.4
			Min	I	-73.3	-12.1	-18.3	-0.0	-12.6	-12.3
				J	-74.8	-12.1	-19.9	-0.0	-15.8	-18.2
			RC ENV~2 Max	I	-27.0	0.0	1.9	0.0	21.6	0.6
				J	-28.1	0.0	2.9	0.0	27.9	0.7
			Min	I	-53.3	-0.3	-12.8	0.0	1.1	0.5
				J	-54.5	-0.3	-13.9	0.0	-0.1	0.6
221	1	1	SX(RS)	I	0.2	0.2	10.3	0.0	1.3	0.2
				J	0.2	0.2	10.3	0.0	6.0	0.1
			SY(RS)	I	1.8	11.3	3.0	0.0	1.5	10.4
				J	1.8	11.3	3.0	0.0	0.1	4.8
			RC ENV~1 Max	I	-29.2	10.8	5.8	0.0	1.7	9.7
				J	-30.3	10.8	5.8	0.0	8.5	4.3
			Min	I	-76.6	-11.7	-14.8	-0.0	-1.2	-11.1
				J	-78.0	-11.7	-14.8	-0.0	-3.5	-5.2
			RC ENV~2 Max	I	-28.4	-0.5	-2.2	-0.0	0.8	-0.7
				J	-29.5	-0.5	-1.2	-0.0	4.9	-0.4
			Min	I	-54.8	-0.8	-9.5	-0.0	-0.2	-1.3
				J	-55.9	-0.8	-10.2	-0.0	1.6	-0.9
222	1	1	SX(RS)	I	0.2	0.2	10.6	0.0	6.0	0.1
				J	0.2	0.2	10.6	0.0	11.3	0.1
			SY(RS)	I	1.8	11.6	3.1	0.0	0.1	4.8
				J	1.8	11.6	3.1	0.0	1.6	1.0
			RC ENV~1 Max	I	-30.3	11.1	6.1	0.0	8.5	4.3
				J	-31.5	11.1	6.1	0.0	16.0	0.8
			Min	I	-78.0	-12.0	-15.1	-0.0	-3.5	-5.2
				J	-79.5	-12.0	-15.3	-0.0	-6.5	-1.2
			RC ENV~2 Max	I	-29.5	-0.5	-1.2	-0.0	4.9	-0.4
				J	-30.6	-0.5	-0.1	-0.0	10.1	-0.1
			Min	I	-55.9	-0.8	-10.2	-0.0	1.6	-0.9
				J	-57.0	-0.8	-10.8	-0.0	1.9	-0.5
223	1	1	SX(RS)	I	0.2	0.2	10.8	0.0	11.3	0.1
				J	0.2	0.2	10.8	0.0	16.6	0.1

			SY(RS)	I	1.8	11.8	3.1	0.0	1.6	1.0
				J	1.8	11.8	3.1	0.0	3.1	6.9
			RC ENV~1 Max	I	-31.5	11.3	6.3	0.0	16.0	0.8
				J	-32.6	11.3	6.3	0.0	23.7	6.9
			Min	I	-79.5	-12.2	-15.3	-0.0	-6.5	-1.2
				J	-81.0	-12.2	-16.7	-0.0	-9.6	-6.9
			RC ENV~2 Max	I	-30.6	-0.5	-0.1	-0.0	10.1	-0.1
				J	-31.8	-0.5	0.9	-0.0	15.7	0.1
			Min	I	-57.0	-0.8	-10.8	-0.0	1.9	-0.5
				J	-58.2	-0.8	-11.7	-0.0	1.8	-0.0
224	1	1	SX(RS)	I	0.2	0.2	10.9	0.0	16.6	0.1
				J	0.2	0.2	10.9	0.0	22.1	0.2
			SY(RS)	I	1.8	11.9	3.1	0.0	3.1	6.9
				J	1.8	11.9	3.1	0.0	4.7	12.8
			RC ENV~1 Max	I	-32.6	11.4	6.4	0.0	23.7	6.9
				J	-33.7	11.4	6.4	0.0	31.4	13.1
			Min	I	-81.0	-12.3	-16.7	-0.0	-9.6	-6.9
				J	-82.4	-12.3	-18.3	-0.0	-12.8	-12.6
			RC ENV~2 Max	I	-31.8	-0.5	0.9	-0.0	15.7	0.1
				J	-32.9	-0.5	1.9	-0.0	21.5	0.5
			Min	I	-58.2	-0.8	-11.7	-0.0	1.8	-0.0
				J	-59.3	-0.8	-12.8	-0.0	1.0	0.2
225	1	1	SX(RS)	I	0.2	0.2	10.9	0.0	22.1	0.2
				J	0.2	0.2	10.9	0.0	27.5	0.3
			SY(RS)	I	1.8	11.9	3.1	0.0	4.7	12.8
				J	1.8	11.9	3.1	0.0	6.3	18.8
			RC ENV~1 Max	I	-33.7	11.4	6.4	0.0	31.4	13.1
				J	-34.8	11.4	6.4	0.0	39.5	19.3
			Min	I	-82.4	-12.4	-18.3	-0.0	-12.8	-12.6
				J	-83.9	-12.4	-19.8	-0.0	-16.0	-18.3
			RC ENV~2 Max	I	-32.9	-0.5	1.9	-0.0	21.5	0.5
				J	-34.0	-0.5	3.0	-0.0	27.8	0.8
			Min	I	-59.3	-0.8	-12.8	-0.0	1.0	0.2
				J	-60.4	-0.8	-13.8	-0.0	-0.2	0.5
226	1	1	SX(RS)	I	7.0	0.8	10.8	0.0	6.6	1.1
				J	7.0	0.8	10.8	0.0	1.7	0.7
			SY(RS)	I	4.7	8.1	0.7	0.0	0.7	6.4
				J	4.7	8.1	0.7	0.0	0.4	2.6
			RC ENV~1 Max	I	-15.3	11.6	12.0	0.0	9.1	11.1
				J	-16.4	11.6	12.0	0.0	4.0	7.2
			Min	I	-48.4	-4.7	-9.7	-0.0	-4.1	-1.8
				J	-49.9	-4.7	-9.7	-0.0	0.2	0.3
			RC ENV~2 Max	I	-22.0	5.6	3.7	-0.0	4.8	8.0
				J	-23.2	5.6	4.2	-0.0	3.0	5.2
			Min	I	-34.9	2.6	-1.3	-0.0	0.6	3.4
				J	-36.0	2.6	-1.8	-0.0	1.4	2.1
227	1	1	SX(RS)	I	7.0	0.8	11.0	0.0	1.7	0.7
				J	7.0	0.8	11.0	0.0	4.7	0.3
			SY(RS)	I	4.7	8.4	0.7	0.0	0.4	2.6
				J	4.7	8.4	0.7	0.0	0.1	2.6
			RC ENV~1 Max	I	-16.4	11.9	12.1	0.0	4.0	7.2
				J	-17.6	11.9	12.1	0.0	6.1	3.7
			Min	I	-49.9	-5.0	-9.9	-0.0	0.2	0.3
				J	-51.3	-5.0	-9.9	-0.0	-3.3	-1.4
			RC ENV~2 Max	I	-23.2	5.6	4.2	-0.0	3.0	5.2
				J	-24.3	5.6	4.7	-0.0	2.6	2.4
			Min	I	-36.0	2.6	-1.8	-0.0	1.4	2.1
				J	-37.1	2.6	-2.3	-0.0	0.5	0.8
228	1	1	SX(RS)	I	7.0	0.8	11.1	0.0	4.7	0.3

				J	7.0	0.8	11.1	0.0	10.1	0.1
			SY(RS)	I	4.7	8.6	0.7	0.0	0.1	2.6
				J	4.7	8.6	0.7	0.0	0.3	6.6
			RC ENV~1 Max	I	-17.6	12.1	12.2	0.0	6.1	3.7
				J	-18.7	12.1	12.2	0.0	11.0	6.0
			Min	I	-51.3	-5.2	-10.0	-0.0	-3.3	-1.4
				J	-52.8	-5.2	-10.0	-0.0	-9.3	-7.1
			RC ENV~2 Max	I	-24.3	5.6	4.7	-0.0	2.6	2.4
				J	-25.4	5.6	5.2	-0.0	3.7	-0.4
			Min	I	-37.1	2.6	-2.3	-0.0	0.5	0.8
				J	-38.2	2.6	-2.8	-0.0	-1.8	-0.5
229	1	1	SX(RS)	I	7.0	0.8	11.1	0.0	10.1	0.1
				J	7.0	0.8	11.1	0.0	15.7	0.5
			SY(RS)	I	4.7	8.8	0.7	0.0	0.3	6.6
				J	4.7	8.8	0.7	0.0	0.7	10.9
			RC ENV~1 Max	I	-18.7	12.2	12.3	0.0	11.0	6.0
				J	-19.8	12.2	12.3	0.0	15.9	8.6
			Min	I	-52.8	-5.3	-10.0	-0.0	-9.3	-7.1
				J	-54.3	-5.3	-10.0	-0.0	-15.4	-13.1
			RC ENV~2 Max	I	-25.4	5.6	5.2	-0.0	3.7	-0.4
				J	-26.5	5.6	5.7	-0.0	5.2	-1.8
			Min	I	-38.2	2.6	-2.8	-0.0	-1.8	-0.5
				J	-39.4	2.6	-3.3	-0.0	-4.6	-3.2
230	1	1	SX(RS)	I	7.0	0.8	11.2	0.0	15.7	0.5
				J	7.0	0.8	11.2	0.0	21.2	0.9
			SY(RS)	I	4.7	8.8	0.7	0.0	0.7	10.9
				J	4.7	8.8	0.7	0.0	1.0	15.2
			RC ENV~1 Max	I	-19.8	12.2	12.3	0.0	15.9	8.6
				J	-20.9	12.2	12.3	0.0	20.9	11.3
			Min	I	-54.3	-5.4	-10.0	-0.0	-15.4	-13.1
				J	-55.7	-5.4	-10.0	-0.0	-21.5	-19.2
			RC ENV~2 Max	I	-26.5	5.6	5.7	-0.0	5.2	-1.8
				J	-27.7	5.6	6.3	-0.0	7.0	-3.1
			Min	I	-39.4	2.6	-3.3	-0.0	-4.6	-3.2
				J	-40.5	2.6	-3.9	-0.0	-7.6	-6.1
231	1	1	SX(RS)	I	7.0	0.8	10.8	0.0	6.6	1.1
				J	7.0	0.8	10.8	0.0	1.7	0.7
			SY(RS)	I	4.7	8.1	0.7	0.0	0.7	6.4
				J	4.7	8.1	0.7	0.0	0.4	2.6
			RC ENV~1 Max	I	-15.2	5.0	9.6	0.0	4.1	1.9
				J	-16.3	5.0	9.6	0.0	-0.1	-0.3
			Min	I	-47.4	-11.3	-12.0	-0.0	-9.1	-10.9
				J	-48.8	-11.3	-12.0	-0.0	-3.7	-6.8
			RC ENV~2 Max	I	-22.1	-2.5	1.2	-0.0	-0.5	-3.6
				J	-23.2	-2.5	1.6	-0.0	-1.2	-2.3
			Min	I	-34.1	-5.0	-4.7	-0.0	-5.1	-7.5
				J	-35.3	-5.0	-5.0	-0.0	-2.7	-5.0
232	1	1	SX(RS)	I	7.0	0.8	10.9	0.0	1.7	0.7
				J	7.0	0.8	10.9	0.0	4.7	0.3
			SY(RS)	I	4.7	8.4	0.7	0.0	0.4	2.6
				J	4.7	8.4	0.7	0.0	0.1	2.6
			RC ENV~1 Max	I	-16.3	5.3	9.8	0.0	-0.1	-0.3
				J	-17.4	5.3	9.8	0.0	3.4	1.2
			Min	I	-48.8	-11.6	-12.1	-0.0	-3.7	-6.8
				J	-50.3	-11.6	-12.1	-0.0	-6.0	-3.9
			RC ENV~2 Max	I	-23.2	-2.5	1.6	-0.0	-1.2	-2.3
				J	-24.4	-2.5	1.9	-0.0	0.1	-1.1
			Min	I	-35.3	-5.0	-5.0	-0.0	-2.7	-5.0
				J	-36.4	-5.0	-5.3	-0.0	-2.2	-2.4

233	1	1	SX(RS)	I	7.0	0.8	11.0	0.0	4.7	0.3
				J	7.0	0.8	11.0	0.0	10.1	0.1
			SY(RS)	I	4.7	8.7	0.7	0.0	0.1	2.6
				J	4.7	8.7	0.7	0.0	0.3	6.6
			RC ENV~1 Max	I	-17.4	5.5	9.9	0.0	3.4	1.2
				J	-18.5	5.5	9.9	0.0	9.3	6.9
			Min	I	-50.3	-11.8	-12.2	-0.0	-6.0	-3.9
				J	-51.8	-11.8	-12.2	-0.0	-10.8	-6.3
			RC ENV~2 Max	I	-24.4	-2.5	1.9	-0.0	0.1	-1.1
				J	-25.5	-2.5	2.2	-0.0	2.7	0.3
			Min	I	-36.4	-5.0	-5.3	-0.0	-2.2	-2.4
				J	-37.5	-5.0	-5.7	-0.0	-3.1	-0.0
234	1	1	SX(RS)	I	7.0	0.8	11.1	0.0	10.1	0.1
				J	7.0	0.8	11.1	0.0	15.6	0.5
			SY(RS)	I	4.7	8.8	0.7	0.0	0.3	6.6
				J	4.7	8.8	0.7	0.0	0.7	10.9
			RC ENV~1 Max	I	-18.5	5.6	9.9	0.0	9.3	6.9
				J	-19.7	5.6	9.9	0.0	15.4	12.8
			Min	I	-51.8	-12.0	-12.3	-0.0	-10.8	-6.3
				J	-53.2	-12.0	-12.3	-0.0	-15.7	-9.0
			RC ENV~2 Max	I	-25.5	-2.5	2.2	-0.0	2.7	0.3
				J	-26.6	-2.5	2.5	-0.0	5.6	2.6
			Min	I	-37.5	-5.0	-5.7	-0.0	-3.1	-0.0
				J	-38.6	-5.0	-6.0	-0.0	-4.2	1.3
235	1	1	SX(RS)	I	7.0	0.8	11.1	0.0	15.6	0.5
				J	7.0	0.8	11.1	0.0	21.1	0.9
			SY(RS)	I	4.7	8.8	0.7	0.0	0.7	10.9
				J	4.7	8.8	0.7	0.0	1.0	15.3
			RC ENV~1 Max	I	-19.7	5.6	10.0	0.0	15.4	12.8
				J	-20.8	5.6	10.0	0.0	21.6	18.7
			Min	I	-53.2	-12.0	-12.3	-0.0	-15.7	-9.0
				J	-54.7	-12.0	-12.3	-0.0	-20.7	-11.8
			RC ENV~2 Max	I	-26.6	-2.5	2.5	-0.0	5.6	2.6
				J	-27.7	-2.5	2.8	-0.0	8.7	5.1
			Min	I	-38.6	-5.0	-6.0	-0.0	-4.2	1.3
				J	-39.8	-5.0	-6.3	-0.0	-5.6	2.5
236	1	1	SX(RS)	I	0.2	0.1	10.3	0.0	1.3	0.1
				J	0.2	0.1	10.3	0.0	6.0	0.1
			SY(RS)	I	1.8	11.3	3.0	0.0	1.5	10.4
				J	1.8	11.3	3.0	0.0	0.1	4.8
			RC ENV~1 Max	I	-29.8	11.4	14.8	0.0	1.2	10.8
				J	-30.9	11.4	14.8	0.0	3.5	5.1
			Min	I	-75.2	-11.1	-5.8	-0.0	-1.7	-10.0
				J	-76.7	-11.1	-5.8	-0.0	-8.5	-4.4
			RC ENV~2 Max	I	-30.7	0.9	9.0	-0.0	-0.0	1.1
				J	-31.9	0.9	9.4	-0.0	-1.5	0.7
			Min	I	-54.0	0.2	2.8	-0.0	-0.3	0.4
				J	-55.1	0.2	2.2	-0.0	-4.6	0.3
237	1	1	SX(RS)	I	0.2	0.1	10.6	0.0	6.0	0.1
				J	0.2	0.1	10.6	0.0	11.2	0.1
			SY(RS)	I	1.8	11.6	3.1	0.0	0.1	4.8
				J	1.8	11.6	3.1	0.0	1.6	1.0
			RC ENV~1 Max	I	-30.9	11.7	15.1	0.0	3.5	5.1
				J	-32.0	11.7	15.1	0.0	6.5	1.3
			Min	I	-76.7	-11.4	-6.1	-0.0	-8.5	-4.4
				J	-78.2	-11.4	-6.1	-0.0	-16.0	-0.8
			RC ENV~2 Max	I	-31.9	0.9	9.4	-0.0	-1.5	0.7
				J	-33.0	0.9	9.8	-0.0	-2.4	0.4
			Min	I	-55.1	0.2	2.2	-0.0	-4.6	0.3
				J	-56.2	0.2	1.6	-0.0	-9.4	0.1

238	1	1	SX(RS)	I	0.2	0.1	10.8	0.0	11.2	0.1
				J	0.2	0.1	10.8	0.0	16.6	0.1
			SY(RS)	I	1.8	11.8	3.1	0.0	1.6	1.0
				J	1.8	11.8	3.1	0.0	3.1	6.9
			RC ENV~1 Max	I	-32.0	11.9	15.3	0.0	6.5	1.3
				J	-33.1	11.9	15.3	0.0	9.6	7.1
			Min	I	-78.2	-11.6	-6.3	-0.0	-16.0	-0.8
				J	-79.6	-11.6	-6.3	-0.0	-23.6	-6.7
			RC ENV~2 Max	I	-33.0	0.9	9.8	-0.0	-2.4	0.4
				J	-34.1	0.9	10.2	-0.0	-3.1	0.2
			Min	I	-56.2	0.2	1.6	-0.0	-9.4	0.1
				J	-57.3	0.2	0.9	-0.0	-14.4	-0.3
239	1	1	SX(RS)	I	0.2	0.1	10.9	0.0	16.6	0.1
				J	0.2	0.1	10.9	0.0	22.0	0.1
			SY(RS)	I	1.8	11.9	3.1	0.0	3.1	6.9
				J	1.8	11.9	3.1	0.0	4.7	12.8
			RC ENV~1 Max	I	-33.1	12.0	15.4	0.0	9.6	7.1
				J	-34.3	12.0	15.4	0.0	12.8	12.9
			Min	I	-79.6	-11.7	-6.4	-0.0	-23.6	-6.7
				J	-81.1	-11.7	-6.4	-0.0	-31.3	-12.7
			RC ENV~2 Max	I	-34.1	0.9	10.2	-0.0	-3.1	0.2
				J	-35.2	0.9	10.5	-0.0	-3.4	0.1
			Min	I	-57.3	0.2	0.9	-0.0	-14.4	-0.3
				J	-58.5	0.2	0.3	-0.0	-19.6	-0.7
240	1	1	SX(RS)	I	0.2	0.1	10.9	0.0	22.0	0.1
				J	0.2	0.1	10.9	0.0	27.5	0.2
			SY(RS)	I	1.8	11.9	3.1	0.0	4.7	12.8
				J	1.8	11.9	3.1	0.0	6.3	18.8
			RC ENV~1 Max	I	-34.3	12.1	15.4	0.0	12.8	12.9
				J	-35.4	12.1	15.5	0.0	16.0	18.8
			Min	I	-81.1	-11.7	-6.4	-0.0	-31.3	-12.7
				J	-82.5	-11.7	-6.4	-0.0	-39.0	-18.8
			RC ENV~2 Max	I	-35.2	0.9	10.5	-0.0	-3.4	0.1
				J	-36.4	0.9	10.9	-0.0	-3.3	-0.0
			Min	I	-58.5	0.2	0.3	-0.0	-19.6	-0.7
				J	-59.6	0.2	-0.3	-0.0	-25.0	-1.2
241	1	1	SX(RS)	I	0.2	0.2	10.3	0.0	1.3	0.2
				J	0.2	0.2	10.3	0.0	6.0	0.1
			SY(RS)	I	1.8	11.3	3.0	0.0	1.5	10.4
				J	1.8	11.3	3.0	0.0	0.1	4.8
			RC ENV~1 Max	I	-29.6	11.0	14.9	0.0	1.2	9.9
				J	-30.7	11.0	14.9	0.0	3.5	4.4
			Min	I	-75.4	-11.5	-5.8	-0.0	-1.7	-10.9
				J	-76.9	-11.5	-5.8	-0.0	-8.5	-5.1
			RC ENV~2 Max	I	-30.5	-0.2	9.2	0.0	-0.1	-0.5
				J	-31.7	-0.2	9.6	0.0	-1.6	-0.3
			Min	I	-54.0	-0.6	3.0	0.0	-0.3	-1.0
				J	-55.1	-0.6	2.3	0.0	-4.8	-0.7
242	1	1	SX(RS)	I	0.2	0.2	10.6	0.0	6.0	0.1
				J	0.2	0.2	10.6	0.0	11.3	0.1
			SY(RS)	I	1.8	11.6	3.1	0.0	0.1	4.8
				J	1.8	11.6	3.1	0.0	1.6	1.0
			RC ENV~1 Max	I	-30.7	11.3	15.1	0.0	3.5	4.4
				J	-31.8	11.3	15.1	0.0	6.5	0.8
			Min	I	-76.9	-11.8	-6.1	-0.0	-8.5	-5.1
				J	-78.3	-11.8	-6.1	-0.0	-16.0	-1.2
			RC ENV~2 Max	I	-31.7	-0.2	9.6	0.0	-1.6	-0.3
				J	-32.8	-0.2	9.9	0.0	-2.6	-0.1
			Min	I	-55.1	-0.6	2.3	0.0	-4.8	-0.7

				J	-56.3	-0.6	1.7	0.0	-9.6	-0.4
243	1	1	SX(RS)	I	0.2	0.2	10.8	0.0	11.3	0.1
				J	0.2	0.2	10.8	0.0	16.6	0.1
			SY(RS)	I	1.8	11.8	3.1	0.0	1.6	1.0
				J	1.8	11.8	3.1	0.0	3.1	6.9
			RC ENV~1 Max	I	-31.8	11.5	15.3	0.0	6.5	0.8
				J	-33.0	11.5	15.3	0.0	9.6	6.8
			Min	I	-78.3	-12.0	-6.3	-0.0	-16.0	-1.2
				J	-79.8	-12.0	-6.3	-0.0	-23.7	-7.0
			RC ENV~2 Max	I	-32.8	-0.2	9.9	0.0	-2.6	-0.1
				J	-33.9	-0.2	10.3	0.0	-3.3	0.1
			Min	I	-56.3	-0.6	1.7	0.0	-9.6	-0.4
				J	-57.4	-0.6	1.1	0.0	-14.7	-0.1
244	1	1	SX(RS)	I	0.2	0.2	10.9	0.0	16.6	0.1
				J	0.2	0.2	10.9	0.0	22.1	0.2
			SY(RS)	I	1.8	11.9	3.1	0.0	3.1	6.9
				J	1.8	11.9	3.1	0.0	4.7	12.8
			RC ENV~1 Max	I	-33.0	11.6	15.4	0.0	9.6	6.8
				J	-34.1	11.6	15.4	0.0	12.8	12.8
			Min	I	-79.8	-12.1	-6.4	-0.0	-23.7	-7.0
				J	-81.2	-12.1	-6.4	-0.0	-31.4	-12.8
			RC ENV~2 Max	I	-33.9	-0.2	10.3	0.0	-3.3	0.1
				J	-35.0	-0.2	10.7	0.0	-3.7	0.4
			Min	I	-57.4	-0.6	1.1	0.0	-14.7	-0.1
				J	-58.5	-0.6	0.5	0.0	-19.9	0.0
245	1	1	SX(RS)	I	0.2	0.2	10.9	0.0	22.1	0.2
				J	0.2	0.2	10.9	0.0	27.5	0.3
			SY(RS)	I	1.8	11.9	3.1	0.0	4.7	12.8
				J	1.8	11.9	3.1	0.0	6.3	18.8
			RC ENV~1 Max	I	-34.1	11.7	15.4	0.0	12.8	12.8
				J	-35.2	11.7	15.8	0.0	16.0	18.9
			Min	I	-81.2	-12.2	-6.4	-0.0	-31.4	-12.8
				J	-82.7	-12.2	-6.4	-0.0	-39.1	-18.6
			RC ENV~2 Max	I	-35.0	-0.2	10.7	0.0	-3.7	0.4
				J	-36.2	-0.2	11.1	0.0	-3.8	0.7
			Min	I	-58.5	-0.6	0.5	0.0	-19.9	0.0
				J	-59.6	-0.6	-0.2	0.0	-25.4	0.1
246	1	1	SX(RS)	I	7.0	0.8	10.8	0.0	6.6	1.1
				J	7.0	0.8	10.8	0.0	1.7	0.7
			SY(RS)	I	4.7	8.1	0.7	0.0	0.7	6.4
				J	4.7	8.1	0.7	0.0	0.4	2.6
			RC ENV~1 Max	I	-15.3	11.4	9.7	0.0	4.1	10.9
				J	-16.4	11.4	9.7	0.0	-0.2	6.8
			Min	I	-47.1	-4.8	-12.0	-0.0	-9.2	-1.9
				J	-48.5	-4.8	-12.0	-0.0	-4.0	0.2
			RC ENV~2 Max	I	-22.2	5.0	1.7	0.0	-0.5	7.4
				J	-23.4	5.0	2.0	0.0	-1.4	4.9
			Min	I	-34.0	2.4	-4.3	0.0	-5.1	3.5
				J	-35.1	2.4	-4.6	0.0	-3.0	2.3
247	1	1	SX(RS)	I	7.0	0.8	11.0	0.0	1.7	0.7
				J	7.0	0.8	11.0	0.0	4.7	0.3
			SY(RS)	I	4.7	8.4	0.7	0.0	0.4	2.6
				J	4.7	8.4	0.7	0.0	0.1	2.6
			RC ENV~1 Max	I	-16.4	11.8	9.8	0.0	-0.2	6.8
				J	-17.5	11.8	9.8	0.0	3.3	3.8
			Min	I	-48.5	-5.1	-12.2	-0.0	-4.0	0.2
				J	-50.0	-5.1	-12.2	-0.0	-6.1	-1.4
			RC ENV~2 Max	I	-23.4	5.0	2.0	0.0	-1.4	4.9
				J	-24.5	5.0	2.3	0.0	-0.3	2.4

			Min	I	-35.1	2.4	-4.6	0.0	-3.0	2.3
				J	-36.2	2.4	-4.9	0.0	-2.6	1.1
248	1	1	SX(RS)	I	7.0	0.8	11.1	0.0	4.7	0.3
				J	7.0	0.8	11.1	0.0	10.1	0.1
			SY(RS)	I	4.7	8.7	0.7	0.0	0.1	2.6
				J	4.7	8.7	0.7	0.0	0.3	6.6
			RC ENV~1 Max	I	-17.5	12.0	9.9	0.0	3.3	3.8
				J	-18.6	12.0	9.9	0.0	9.3	6.1
			Min	I	-50.0	-5.3	-12.3	-0.0	-6.1	-1.4
				J	-51.4	-5.3	-12.3	-0.0	-10.9	-7.0
			RC ENV~2 Max	I	-24.5	5.0	2.3	0.0	-0.3	2.4
				J	-25.6	5.0	2.6	0.0	2.1	0.1
			Min	I	-36.2	2.4	-4.9	0.0	-2.6	1.1
				J	-37.3	2.4	-5.2	0.0	-3.7	-0.4
249	1	1	SX(RS)	I	7.0	0.8	11.1	0.0	10.1	0.1
				J	7.0	0.8	11.1	0.0	15.7	0.5
			SY(RS)	I	4.7	8.8	0.7	0.0	0.3	6.6
				J	4.7	8.8	0.7	0.0	0.7	10.9
			RC ENV~1 Max	I	-18.6	12.1	10.0	0.0	9.3	6.1
				J	-19.8	12.1	10.0	0.0	15.4	8.8
			Min	I	-51.4	-5.5	-12.3	-0.0	-10.9	-7.0
				J	-52.9	-5.5	-12.3	-0.0	-15.9	-13.0
			RC ENV~2 Max	I	-25.6	5.0	2.6	0.0	2.1	0.1
				J	-26.7	5.0	2.9	0.0	4.7	-1.1
			Min	I	-37.3	2.4	-5.2	0.0	-3.7	-0.4
				J	-38.5	2.4	-5.5	0.0	-5.1	-2.6
250	1	1	SX(RS)	I	7.0	0.8	11.2	0.0	15.7	0.5
				J	7.0	0.8	11.2	0.0	21.2	0.9
			SY(RS)	I	4.7	8.8	0.7	0.0	0.7	10.9
				J	4.7	8.8	0.7	0.0	1.0	15.3
			RC ENV~1 Max	I	-19.8	12.1	10.0	0.0	15.4	8.8
				J	-20.9	12.1	10.0	0.0	21.6	11.5
			Min	I	-52.9	-5.5	-12.3	-0.0	-15.9	-13.0
				J	-54.4	-5.5	-12.3	-0.0	-20.9	-19.0
			RC ENV~2 Max	I	-26.7	5.0	2.9	0.0	4.7	-1.1
				J	-27.9	5.0	3.3	0.0	7.6	-2.3
			Min	I	-38.5	2.4	-5.5	0.0	-5.1	-2.6
				J	-39.6	2.4	-5.8	0.0	-6.7	-5.1
251	1	1	SX(RS)	I	0.0	0.0	5.3	0.0	9.7	0.0
				J	0.0	0.0	5.3	0.0	7.0	0.0
			SY(RS)	I	11.8	10.3	0.0	0.0	0.0	15.2
				J	11.8	10.3	0.0	0.0	0.0	10.1
			RC ENV~1 Max	I	-18.7	8.0	5.4	0.0	9.7	9.5
				J	-19.8	8.0	5.4	0.0	7.1	5.5
			Min	I	-55.9	-12.6	-5.3	-0.0	-9.6	-21.0
				J	-57.4	-12.6	-5.3	-0.0	-7.0	-14.7
			RC ENV~2 Max	I	-29.1	-2.1	2.0	0.0	3.1	-5.3
				J	-30.2	-2.1	2.0	0.0	2.1	-4.3
			Min	I	-41.4	-4.0	-1.5	-0.0	-2.5	-10.1
				J	-42.5	-4.0	-1.5	-0.0	-1.8	-8.1
252	1	1	SX(RS)	I	0.0	0.0	5.6	0.0	7.0	0.0
				J	0.0	0.0	5.6	0.0	4.3	0.0
			SY(RS)	I	11.8	10.7	0.0	0.0	0.0	10.1
				J	11.8	10.7	0.0	0.0	0.0	4.7
			RC ENV~1 Max	I	-19.8	8.4	5.6	0.0	7.1	5.5
				J	-21.0	8.4	5.6	0.0	4.3	1.2
			Min	I	-57.4	-13.0	-5.5	-0.0	-7.0	-14.7
				J	-58.8	-13.0	-5.5	-0.0	-4.3	-8.5
			RC ENV~2 Max	I	-30.2	-2.1	2.0	0.0	2.1	-4.3

				J	-31.3	-2.1	2.0	0.0	1.1	-3.3
			Min	I	-42.5	-4.0	-1.5	-0.0	-1.8	-8.1
				J	-43.7	-4.0	-1.5	-0.0	-1.1	-6.1
253	1	1	SX(RS)	I	0.0	0.0	5.8	0.0	4.3	0.0
				J	0.0	0.0	5.8	0.0	1.6	0.0
			SY(RS)	I	11.8	11.0	0.0	0.0	0.0	4.7
				J	11.8	11.0	0.0	0.0	0.0	0.8
			RC ENV~1 Max	I	-21.0	8.8	5.8	0.0	4.3	1.2
				J	-22.1	8.8	5.8	0.0	1.6	-1.6
			Min	I	-58.8	-13.3	-5.7	-0.0	-4.3	-8.5
				J	-60.3	-13.3	-5.7	-0.0	-1.6	-5.7
			RC ENV~2 Max	I	-31.3	-2.1	2.0	0.0	1.1	-3.3
				J	-32.5	-2.1	2.0	0.0	0.1	-2.2
			Min	I	-43.7	-4.0	-1.5	-0.0	-1.1	-6.1
				J	-44.8	-4.0	-1.5	-0.0	-0.3	-4.1
254	1	1	SX(RS)	I	0.0	0.0	5.9	0.0	1.6	0.0
				J	0.0	0.0	5.9	0.0	2.0	0.0
			SY(RS)	I	11.8	11.3	0.0	0.0	0.0	0.8
				J	11.8	11.3	0.0	0.0	0.0	6.4
			RC ENV~1 Max	I	-22.1	9.0	6.0	0.0	1.6	-1.6
				J	-23.2	9.0	6.0	0.0	2.0	5.2
			Min	I	-60.3	-13.6	-5.9	-0.0	-1.6	-5.7
				J	-61.8	-13.6	-5.9	-0.0	-2.0	-7.7
			RC ENV~2 Max	I	-32.5	-2.1	2.0	0.0	0.1	-2.2
				J	-33.6	-2.1	2.0	0.0	0.4	-1.2
			Min	I	-44.8	-4.0	-1.5	-0.0	-0.3	-4.1
				J	-45.9	-4.0	-1.5	-0.0	-0.9	-2.1
255	1	1	SX(RS)	I	0.0	0.0	6.0	0.0	2.0	0.0
				J	0.0	0.0	6.0	0.0	4.8	0.0
			SY(RS)	I	11.8	11.5	0.0	0.0	0.0	6.4
				J	11.8	11.5	0.0	0.0	0.0	12.2
			RC ENV~1 Max	I	-23.2	9.2	6.1	0.0	2.0	5.2
				J	-24.3	9.2	6.1	0.0	4.8	12.1
			Min	I	-61.8	-13.7	-6.0	-0.0	-2.0	-7.7
				J	-63.2	-13.7	-6.0	-0.0	-4.9	-12.3
			RC ENV~2 Max	I	-33.6	-2.1	2.0	0.0	0.4	-1.2
				J	-34.7	-2.1	2.0	0.0	1.1	-0.1
			Min	I	-45.9	-4.0	-1.5	-0.0	-0.9	-2.1
				J	-47.0	-4.0	-1.5	-0.0	-1.8	-0.2
256	1	1	SX(RS)	I	0.0	0.0	6.1	0.0	4.8	0.0
				J	0.0	0.0	6.1	0.0	7.8	0.0
			SY(RS)	I	11.8	11.6	0.0	0.0	0.0	12.2
				J	11.8	11.6	0.0	0.0	0.0	18.0
			RC ENV~1 Max	I	-24.3	9.3	6.2	0.0	4.8	12.1
				J	-25.5	9.3	6.2	0.0	7.8	19.0
			Min	I	-63.2	-13.9	-6.1	-0.0	-4.9	-12.3
				J	-64.7	-13.9	-6.1	-0.0	-7.9	-16.9
			RC ENV~2 Max	I	-34.7	-2.1	2.0	0.0	1.1	-0.1
				J	-35.8	-2.1	2.0	0.0	1.9	1.8
			Min	I	-47.0	-4.0	-1.5	-0.0	-1.8	-0.2
				J	-48.2	-4.0	-1.5	-0.0	-2.8	0.8
257	1	1	SX(RS)	I	0.0	0.0	6.2	0.0	7.8	0.0
				J	0.0	0.0	6.2	0.0	10.9	0.0
			SY(RS)	I	11.8	11.7	0.0	0.0	0.0	18.0
				J	11.8	11.7	0.0	0.0	0.0	23.8
			RC ENV~1 Max	I	-25.5	9.4	6.2	0.0	7.8	19.0
				J	-26.6	9.4	6.2	0.0	10.8	25.9
			Min	I	-64.7	-13.9	-6.1	-0.0	-7.9	-16.9
				J	-66.2	-13.9	-6.1	-0.0	-11.0	-21.6

			RC ENV~2 Max	I	-35.8	-2.1	2.0	0.0	1.9	1.8
				J	-37.0	-2.1	2.0	0.0	2.6	3.8
			Min	I	-48.2	-4.0	-1.5	-0.0	-2.8	0.8
				J	-49.3	-4.0	-1.5	-0.0	-3.8	1.9
258	1	1	SX(RS)	I	0.0	0.0	6.2	0.0	10.9	0.0
				J	0.0	0.0	6.2	0.0	14.0	0.0
			SY(RS)	I	11.8	11.7	0.0	0.0	0.0	23.8
				J	11.8	11.7	0.0	0.0	0.0	29.6
			RC ENV~1 Max	I	-26.6	9.4	6.2	0.0	10.8	25.9
				J	-27.7	9.4	6.2	0.0	13.9	32.9
			Min	I	-66.2	-13.9	-6.1	-0.0	-11.0	-21.6
				J	-67.6	-13.9	-6.1	-0.0	-14.1	-26.3
			RC ENV~2 Max	I	-37.0	-2.1	2.0	0.0	2.6	3.8
				J	-38.1	-2.1	2.0	0.0	3.3	5.8
			Min	I	-49.3	-4.0	-1.5	-0.0	-3.8	1.9
				J	-50.4	-4.0	-1.5	-0.0	-4.8	2.9
259	1	1	SX(RS)	I	0.0	0.0	9.6	0.0	5.3	0.0
				J	0.0	0.0	9.6	0.0	0.6	0.0
			SY(RS)	I	4.3	14.0	0.0	0.0	0.0	24.3
				J	4.3	14.0	0.0	0.0	0.0	17.3
			RC ENV~1 Max	I	-43.3	14.2	9.6	0.0	5.3	25.1
				J	-44.5	14.2	9.6	0.0	0.5	18.0
			Min	I	-111.4	-13.7	-9.5	-0.0	-5.4	-23.5
				J	-112.8	-13.7	-9.5	-0.0	-0.6	-16.6
			RC ENV~2 Max	I	-45.2	0.6	1.8	0.0	0.8	1.6
				J	-46.3	0.6	1.8	0.0	-0.0	1.3
			Min	I	-80.6	0.2	-1.7	-0.0	-0.9	0.8
				J	-81.7	0.2	-1.7	-0.0	-0.1	0.7
260	1	1	SX(RS)	I	0.0	0.0	10.0	0.0	0.6	0.0
				J	0.0	0.0	10.0	0.0	4.4	0.0
			SY(RS)	I	4.3	14.4	0.0	0.0	0.0	17.3
				J	4.3	14.4	0.0	0.0	0.0	10.1
			RC ENV~1 Max	I	-44.5	14.6	10.0	0.0	0.5	18.0
				J	-45.6	14.6	10.0	0.0	4.4	10.7
			Min	I	-112.8	-14.2	-9.9	-0.0	-0.6	-16.6
				J	-114.3	-14.2	-9.9	-0.0	-4.5	-9.5
			RC ENV~2 Max	I	-46.3	0.6	1.8	0.0	-0.0	1.3
				J	-47.4	0.6	1.8	0.0	0.8	1.0
			Min	I	-81.7	0.2	-1.7	-0.0	-0.1	0.7
				J	-82.9	0.2	-1.7	-0.0	-1.0	0.6
261	1	1	SX(RS)	I	0.0	0.0	10.3	0.0	4.4	0.0
				J	0.0	0.0	10.3	0.0	9.6	0.0
			SY(RS)	I	4.3	14.8	0.0	0.0	0.0	10.1
				J	4.3	14.8	0.0	0.0	0.0	2.8
			RC ENV~1 Max	I	-48.6	15.0	10.3	0.0	4.4	10.7
				J	-49.7	15.0	10.3	0.0	9.5	3.2
			Min	I	-124.8	-14.5	-10.2	-0.0	-4.5	-9.5
				J	-126.3	-14.5	-10.2	-0.0	-9.7	-2.3
			RC ENV~2 Max	I	-52.4	0.6	1.8	0.0	0.8	1.0
				J	-53.5	0.6	1.8	0.0	1.7	0.8
			Min	I	-89.9	0.2	-1.7	-0.0	-1.0	0.6
				J	-91.0	0.2	-1.7	-0.0	-1.9	0.4
262	1	1	SX(RS)	I	0.0	0.0	10.5	0.0	9.6	0.0
				J	0.0	0.0	10.5	0.0	14.8	0.0
			SY(RS)	I	4.3	15.0	0.0	0.0	0.0	2.8
				J	4.3	15.0	0.0	0.0	0.0	4.8
			RC ENV~1 Max	I	-49.7	15.3	10.6	0.0	9.5	3.2
				J	-50.8	15.3	10.6	0.0	14.7	5.1
			Min	I	-126.3	-14.8	-10.5	-0.0	-9.7	-2.3
				J	-127.7	-14.8	-10.5	-0.0	-15.0	-4.4

			RC ENV~2 Max	I	-53.5	0.6	1.8	0.0	1.7	0.8
				J	-54.6	0.6	1.8	0.0	2.5	0.5
			Min	I	-91.0	0.2	-1.7	-0.0	-1.9	0.4
				J	-92.1	0.2	-1.7	-0.0	-2.8	0.2
263	1	1	SX(RS)	I	0.0	0.0	10.7	0.0	14.8	0.0
				J	0.0	0.0	10.7	0.0	20.2	0.0
			SY(RS)	I	4.3	15.2	0.0	0.0	0.0	4.8
				J	4.3	15.2	0.0	0.0	0.0	12.4
			RC ENV~1 Max	I	-50.8	15.5	10.7	0.0	14.7	5.1
				J	-52.0	15.5	10.7	0.0	20.1	12.6
			Min	I	-127.7	-15.0	-10.6	-0.0	-15.0	-4.4
				J	-129.2	-15.0	-10.6	-0.0	-20.3	-12.1
			RC ENV~2 Max	I	-54.6	0.6	1.8	0.0	2.5	0.5
				J	-55.7	0.6	1.8	0.0	3.3	0.3
			Min	I	-92.1	0.2	-1.7	-0.0	-2.8	0.2
				J	-93.2	0.2	-1.7	-0.0	-3.8	-0.0
264	1	1	SX(RS)	I	0.0	0.0	10.8	0.0	20.2	0.0
				J	0.0	0.0	10.8	0.0	25.6	0.0
			SY(RS)	I	4.3	15.4	0.0	0.0	0.0	12.4
				J	4.3	15.4	0.0	0.0	0.0	20.1
			RC ENV~1 Max	I	-52.0	15.6	10.9	0.0	20.1	12.6
				J	-53.1	15.6	10.9	0.0	25.4	20.2
			Min	I	-129.2	-15.1	-10.7	-0.0	-20.3	-12.1
				J	-130.7	-15.1	-10.7	-0.0	-25.8	-19.9
			RC ENV~2 Max	I	-55.7	0.6	1.8	0.0	3.3	0.3
				J	-56.9	0.6	1.8	0.0	4.2	0.1
			Min	I	-93.2	0.2	-1.7	-0.0	-3.8	-0.0
				J	-94.4	0.2	-1.7	-0.0	-4.7	-0.2
265	1	1	SX(RS)	I	0.0	0.0	10.9	0.0	25.6	0.0
				J	0.0	0.0	10.9	0.0	31.0	0.0
			SY(RS)	I	4.3	15.4	0.0	0.0	0.0	20.1
				J	4.3	15.4	0.0	0.0	0.0	27.8
			RC ENV~1 Max	I	-53.1	15.7	10.9	0.0	25.4	20.2
				J	-54.2	15.7	10.9	0.0	30.8	27.8
			Min	I	-130.7	-15.2	-10.8	-0.0	-25.8	-19.9
				J	-132.1	-15.2	-10.8	-0.0	-31.2	-27.8
			RC ENV~2 Max	I	-56.9	0.6	1.8	0.0	4.2	0.1
				J	-58.0	0.6	1.8	0.0	5.0	0.0
			Min	I	-94.4	0.2	-1.7	-0.0	-4.7	-0.2
				J	-95.5	0.2	-1.7	-0.0	-5.6	-0.5
266	1	1	SX(RS)	I	0.0	0.0	10.9	0.0	31.0	0.0
				J	0.0	0.0	10.9	0.0	36.4	0.0
			SY(RS)	I	4.3	15.5	0.0	0.0	0.0	27.8
				J	4.3	15.5	0.0	0.0	0.0	35.5
			RC ENV~1 Max	I	-54.2	15.7	10.9	0.0	30.8	27.8
				J	-55.3	15.7	10.9	0.0	36.2	35.4
			Min	I	-132.1	-15.2	-10.8	-0.0	-31.2	-27.8
				J	-133.6	-15.2	-10.8	-0.0	-36.7	-35.6
			RC ENV~2 Max	I	-58.0	0.6	1.8	0.0	5.0	0.0
				J	-59.1	0.6	1.8	0.0	5.8	-0.1
			Min	I	-95.5	0.2	-1.7	-0.0	-5.6	-0.5
				J	-96.6	0.2	-1.7	-0.0	-6.5	-0.8
267	1	1	SX(RS)	I	0.0	0.0	9.6	0.0	5.3	0.0
				J	0.0	0.0	9.6	0.0	0.6	0.0
			SY(RS)	I	4.3	14.0	0.0	0.0	0.0	24.3
				J	4.3	14.0	0.0	0.0	0.0	17.3
			RC ENV~1 Max	I	-42.7	13.5	9.6	0.0	5.3	23.2
				J	-43.8	13.5	9.6	0.0	0.6	16.4
			Min	I	-111.0	-14.4	-9.6	-0.0	-5.3	-25.4

				J	-112.4	-14.4	-9.6	-0.0	-0.6	-18.2
			RC ENV~2 Max	I	-44.8	-0.4	1.7	0.0	0.8	-1.1
				J	-45.9	-0.4	1.7	0.0	0.1	-0.9
			Min	I	-80.2	-0.7	-1.8	-0.0	-0.8	-1.8
				J	-81.3	-0.7	-1.8	-0.0	-0.0	-1.4
268	1	1	SX(RS)	I	0.0	0.0	10.0	0.0	0.6	0.0
				J	0.0	0.0	10.0	0.0	4.4	0.0
			SY(RS)	I	4.3	14.4	0.0	0.0	0.0	17.3
				J	4.3	14.4	0.0	0.0	0.0	10.1
			RC ENV~1 Max	I	-43.8	14.0	10.0	0.0	0.6	16.4
				J	-45.0	14.0	10.0	0.0	4.4	9.5
			Min	I	-112.4	-14.8	-10.0	-0.0	-0.6	-18.2
				J	-113.9	-14.8	-10.0	-0.0	-4.4	-10.8
			RC ENV~2 Max	I	-45.9	-0.4	1.7	0.0	0.1	-0.9
				J	-47.0	-0.4	1.7	0.0	0.9	-0.6
			Min	I	-81.3	-0.7	-1.8	-0.0	-0.0	-1.4
				J	-82.5	-0.7	-1.8	-0.0	-0.9	-1.1
269	1	1	SX(RS)	I	0.0	0.0	10.3	0.0	4.4	0.0
				J	0.0	0.0	10.3	0.0	9.6	0.0
			SY(RS)	I	4.3	14.8	0.0	0.0	0.0	10.1
				J	4.3	14.8	0.0	0.0	0.0	2.8
			RC ENV~1 Max	I	-48.0	14.3	10.3	0.0	4.4	9.5
				J	-49.1	14.3	10.3	0.0	9.6	2.3
			Min	I	-124.4	-15.2	-10.3	-0.0	-4.4	-10.8
				J	-125.8	-15.2	-10.3	-0.0	-9.6	-3.2
			RC ENV~2 Max	I	-51.7	-0.4	1.7	0.0	0.9	-0.6
				J	-52.9	-0.4	1.7	0.0	1.8	-0.4
			Min	I	-89.5	-0.7	-1.8	-0.0	-0.9	-1.1
				J	-90.6	-0.7	-1.8	-0.0	-1.8	-0.8
270	1	1	SX(RS)	I	0.0	0.0	10.5	0.0	9.6	0.0
				J	0.0	0.0	10.5	0.0	14.8	0.0
			SY(RS)	I	4.3	15.0	0.0	0.0	0.0	2.8
				J	4.3	15.0	0.0	0.0	0.0	4.8
			RC ENV~1 Max	I	-49.1	14.6	10.5	0.0	9.6	2.3
				J	-50.2	14.6	10.5	0.0	14.8	4.5
			Min	I	-125.8	-15.5	-10.5	-0.0	-9.6	-3.2
				J	-127.3	-15.5	-10.5	-0.0	-14.8	-5.0
			RC ENV~2 Max	I	-52.9	-0.4	1.7	0.0	1.8	-0.4
				J	-54.0	-0.4	1.7	0.0	2.7	-0.2
			Min	I	-90.6	-0.7	-1.8	-0.0	-1.8	-0.8
				J	-91.7	-0.7	-1.8	-0.0	-2.6	-0.4
271	1	1	SX(RS)	I	0.0	0.0	10.7	0.0	14.8	0.0
				J	0.0	0.0	10.7	0.0	20.2	0.0
			SY(RS)	I	4.3	15.2	0.0	0.0	0.0	4.8
				J	4.3	15.2	0.0	0.0	0.0	12.4
			RC ENV~1 Max	I	-50.2	14.8	10.7	0.0	14.8	4.5
				J	-51.3	14.8	10.7	0.0	20.2	12.4
			Min	I	-127.3	-15.7	-10.7	-0.0	-14.8	-5.0
				J	-128.8	-15.7	-10.7	-0.0	-20.2	-12.4
			RC ENV~2 Max	I	-54.0	-0.4	1.7	0.0	2.7	-0.2
				J	-55.1	-0.4	1.7	0.0	3.6	0.1
			Min	I	-91.7	-0.7	-1.8	-0.0	-2.6	-0.4
				J	-92.8	-0.7	-1.8	-0.0	-3.5	-0.1
272	1	1	SX(RS)	I	0.0	0.0	10.8	0.0	20.2	0.0
				J	0.0	0.0	10.8	0.0	25.6	0.0
			SY(RS)	I	4.3	15.4	0.0	0.0	0.0	12.4
				J	4.3	15.4	0.0	0.0	0.0	20.1
			RC ENV~1 Max	I	-51.3	14.9	10.8	0.0	20.2	12.4
				J	-52.5	14.9	10.8	0.0	25.6	20.3

			Min	I	-128.8	-15.8	-10.8	-0.0	-20.2	-12.4
				J	-130.2	-15.8	-10.8	-0.0	-25.6	-19.9
		RC ENV~2	Max	I	-55.1	-0.4	1.7	0.0	3.6	0.1
				J	-56.2	-0.4	1.7	0.0	4.5	0.3
			Min	I	-92.8	-0.7	-1.8	-0.0	-3.5	-0.1
				J	-94.0	-0.7	-1.8	-0.0	-4.4	0.2
273	1	1	SX(RS)	I	0.0	0.0	10.8	0.0	25.6	0.0
				J	0.0	0.0	10.8	0.0	31.0	0.0
			SY(RS)	I	4.3	15.4	0.0	0.0	0.0	20.1
				J	4.3	15.4	0.0	0.0	0.0	27.8
		RC ENV~1	Max	I	-52.5	15.0	10.8	0.0	25.6	20.3
				J	-53.6	15.0	10.8	0.0	31.0	28.2
			Min	I	-130.2	-15.9	-10.9	-0.0	-25.6	-19.9
				J	-131.7	-15.9	-10.9	-0.0	-31.0	-27.4
		RC ENV~2	Max	I	-56.2	-0.4	1.7	0.0	4.5	0.3
				J	-57.4	-0.4	1.7	0.0	5.3	0.6
			Min	I	-94.0	-0.7	-1.8	-0.0	-4.4	0.2
				J	-95.1	-0.7	-1.8	-0.0	-5.2	0.4
274	1	1	SX(RS)	I	0.0	0.0	10.9	0.0	31.0	0.0
				J	0.0	0.0	10.9	0.0	36.4	0.0
			SY(RS)	I	4.3	15.5	0.0	0.0	0.0	27.8
				J	4.3	15.5	0.0	0.0	0.0	35.5
		RC ENV~1	Max	I	-53.6	15.0	10.9	0.0	31.0	28.2
				J	-54.7	15.0	10.9	0.0	36.5	36.2
			Min	I	-131.7	-15.9	-10.9	-0.0	-31.0	-27.4
				J	-133.2	-15.9	-10.9	-0.0	-36.4	-34.9
		RC ENV~2	Max	I	-57.4	-0.4	1.7	0.0	5.3	0.6
				J	-58.5	-0.4	1.7	0.0	6.2	0.9
			Min	I	-95.1	-0.7	-1.8	-0.0	-5.2	0.4
				J	-96.2	-0.7	-1.8	-0.0	-6.1	0.6
275	1	1	SX(RS)	I	0.0	0.0	5.4	0.0	9.7	0.0
				J	0.0	0.0	5.4	0.0	7.1	0.0
			SY(RS)	I	11.8	10.3	0.0	0.0	0.0	15.2
				J	11.8	10.3	0.0	0.0	0.0	10.1
		RC ENV~1	Max	I	-18.9	12.8	5.4	0.0	9.7	21.2
				J	-20.0	12.8	5.4	0.0	7.1	14.8
			Min	I	-57.1	-7.8	-5.4	-0.0	-9.7	-9.3
				J	-58.5	-7.8	-5.4	-0.0	-7.1	-5.4
		RC ENV~2	Max	I	-30.1	4.2	1.7	0.0	2.8	10.3
				J	-31.2	4.2	1.7	0.0	1.9	8.2
			Min	I	-42.1	2.2	-1.7	-0.0	-2.8	5.4
				J	-43.3	2.2	-1.7	-0.0	-2.0	4.3
276	1	1	SX(RS)	I	0.0	0.0	5.6	0.0	7.1	0.0
				J	0.0	0.0	5.6	0.0	4.3	0.0
			SY(RS)	I	11.8	10.7	0.0	0.0	0.0	10.1
				J	11.8	10.7	0.0	0.0	0.0	4.7
		RC ENV~1	Max	I	-20.0	13.2	5.6	0.0	7.1	14.8
				J	-21.1	13.2	5.6	0.0	4.3	8.5
			Min	I	-58.5	-8.2	-5.6	-0.0	-7.1	-5.4
				J	-60.0	-8.2	-5.6	-0.0	-4.3	-1.2
		RC ENV~2	Max	I	-31.2	4.2	1.7	0.0	1.9	8.2
				J	-32.3	4.2	1.7	0.0	1.1	6.1
			Min	I	-43.3	2.2	-1.7	-0.0	-2.0	4.3
				J	-44.4	2.2	-1.7	-0.0	-1.1	3.2
277	1	1	SX(RS)	I	0.0	0.0	5.8	0.0	4.3	0.0
				J	0.0	0.0	5.8	0.0	1.7	0.0
			SY(RS)	I	11.8	11.0	0.0	0.0	0.0	4.7
				J	11.8	11.0	0.0	0.0	0.0	0.8
		RC ENV~1	Max	I	-24.1	13.5	5.8	0.0	4.3	8.5

				J	-25.3	13.5	5.8	0.0	1.7	5.6
			Min	I	-70.5	-8.6	-5.8	-0.0	-4.3	-1.2
				J	-71.9	-8.6	-5.8	-0.0	-1.7	1.5
		RC ENV~2	Max	I	-35.8	4.2	1.7	0.0	1.1	6.1
				J	-36.9	4.2	1.7	0.0	0.2	4.0
			Min	I	-51.4	2.2	-1.7	-0.0	-1.1	3.2
				J	-52.5	2.2	-1.7	-0.0	-0.2	2.1
278	1	1	SX(RS)	I	0.0	0.0	6.0	0.0	1.7	0.0
				J	0.0	0.0	6.0	0.0	2.0	0.0
			SY(RS)	I	11.8	11.3	0.0	0.0	0.0	0.8
				J	11.8	11.3	0.0	0.0	0.0	6.4
		RC ENV~1	Max	I	-25.3	13.8	6.0	0.0	1.7	5.6
				J	-26.4	13.8	6.0	0.0	2.0	7.4
			Min	I	-71.9	-8.8	-6.0	-0.0	-1.7	1.5
				J	-73.4	-8.8	-6.0	-0.0	-2.0	-5.4
		RC ENV~2	Max	I	-36.9	4.2	1.7	0.0	0.2	4.0
				J	-38.1	4.2	1.7	0.0	0.6	2.0
			Min	I	-52.5	2.2	-1.7	-0.0	-0.2	2.1
				J	-53.6	2.2	-1.7	-0.0	-0.6	1.0
279	1	1	SX(RS)	I	0.0	0.0	6.1	0.0	2.0	0.0
				J	0.0	0.0	6.1	0.0	4.8	0.0
			SY(RS)	I	11.8	11.5	0.0	0.0	0.0	6.4
				J	11.8	11.5	0.0	0.0	0.0	12.2
		RC ENV~1	Max	I	-26.4	14.0	6.1	0.0	2.0	7.4
				J	-27.5	14.0	6.1	0.0	4.8	11.9
			Min	I	-73.4	-9.0	-6.1	-0.0	-2.0	-5.4
				J	-74.9	-9.0	-6.1	-0.0	-4.8	-12.4
		RC ENV~2	Max	I	-38.1	4.2	1.7	0.0	0.6	2.0
				J	-39.2	4.2	1.7	0.0	1.5	0.0
			Min	I	-53.6	2.2	-1.7	-0.0	-0.6	1.0
				J	-54.8	2.2	-1.7	-0.0	-1.5	-0.2
280	1	1	SX(RS)	I	0.0	0.0	6.2	0.0	4.8	0.0
				J	0.0	0.0	6.2	0.0	7.9	0.0
			SY(RS)	I	11.8	11.6	0.0	0.0	0.0	12.2
				J	11.8	11.6	0.0	0.0	0.0	18.0
		RC ENV~1	Max	I	-27.5	14.1	6.2	0.0	4.8	11.9
				J	-28.6	14.1	6.2	0.0	7.9	16.5
			Min	I	-74.9	-9.1	-6.2	-0.0	-4.8	-12.4
				J	-76.3	-9.1	-6.2	-0.0	-7.9	-19.4
		RC ENV~2	Max	I	-39.2	4.2	1.7	0.0	1.5	0.0
				J	-40.3	4.2	1.7	0.0	2.4	-1.1
			Min	I	-54.8	2.2	-1.7	-0.0	-1.5	-0.2
				J	-55.9	2.2	-1.7	-0.0	-2.3	-2.2
281	1	1	SX(RS)	I	0.0	0.0	6.2	0.0	7.9	0.0
				J	0.0	0.0	6.2	0.0	11.0	0.0
			SY(RS)	I	11.8	11.7	0.0	0.0	0.0	18.0
				J	11.8	11.7	0.0	0.0	0.0	23.8
		RC ENV~1	Max	I	-28.6	14.1	6.2	0.0	7.9	16.5
				J	-29.8	14.1	6.2	0.0	11.0	21.1
			Min	I	-76.3	-9.2	-6.2	-0.0	-7.9	-19.4
				J	-77.8	-9.2	-6.2	-0.0	-10.9	-26.5
		RC ENV~2	Max	I	-40.3	4.2	1.7	0.0	2.4	-1.1
				J	-41.4	4.2	1.7	0.0	3.3	-2.2
			Min	I	-55.9	2.2	-1.7	-0.0	-2.3	-2.2
				J	-57.0	2.2	-1.7	-0.0	-3.2	-4.3
282	1	1	SX(RS)	I	0.0	0.0	6.2	0.0	11.0	0.0
				J	0.0	0.0	6.2	0.0	14.0	0.0
			SY(RS)	I	11.8	11.7	0.0	0.0	0.0	23.8
				J	11.8	11.7	0.0	0.0	0.0	29.6

			RC ENV~1 Max	I	-29.8	14.2	6.2	0.0	11.0	21.1
				J	-30.9	14.2	6.2	0.0	14.1	25.7
			Min	I	-77.8	-9.2	-6.2	-0.0	-10.9	-26.5
				J	-79.3	-9.2	-6.2	-0.0	-14.0	-33.6
			RC ENV~2 Max	I	-41.4	4.2	1.7	0.0	3.3	-2.2
				J	-42.6	4.2	1.7	0.0	4.1	-3.3
			Min	I	-57.0	2.2	-1.7	-0.0	-3.2	-4.3
				J	-58.1	2.2	-1.7	-0.0	-4.0	-6.3
283	1	2	SX(RS)	I	9.2	3.8	4.5	1.6	11.4	5.1
				J	9.2	3.8	4.5	1.6	9.0	5.0
			SY(RS)	I	2.5	6.5	0.1	2.9	0.2	8.6
				J	2.5	6.5	0.1	2.9	0.1	5.1
			RC ENV~1 Max	I	2.8	5.7	1.4	3.0	12.2	5.4
				J	3.1	5.7	2.6	3.0	11.2	2.4
			Min	I	-15.9	-7.3	-7.5	-2.8	-10.6	-11.7
				J	-15.4	-7.3	-6.4	-2.8	-6.9	-8.5
			RC ENV~2 Max	I	-6.3	0.3	-1.8	0.2	4.1	-1.2
				J	-6.0	0.3	-0.6	0.2	4.8	-1.4
			Min	I	-11.4	-2.2	-4.7	-0.0	-3.0	-7.2
				J	-11.0	-2.2	-3.5	-0.0	-0.8	-6.0
284	1	2	SX(RS)	I	9.0	3.8	4.6	1.6	9.0	5.0
				J	9.0	3.8	4.6	1.6	6.6	5.7
			SY(RS)	I	2.5	6.4	0.1	2.9	0.1	5.1
				J	2.5	6.4	0.1	2.9	0.1	1.7
			RC ENV~1 Max	I	3.0	5.6	2.6	3.0	11.2	2.4
				J	3.4	5.6	3.8	3.0	9.5	3.4
			Min	I	-15.4	-7.2	-6.5	-2.8	-6.9	-8.5
				J	-14.9	-7.2	-5.3	-2.8	-3.7	-8.0
			RC ENV~2 Max	I	-6.0	0.3	-0.6	0.2	4.8	-1.4
				J	-5.6	0.3	0.6	0.2	4.8	-1.5
			Min	I	-11.0	-2.2	-3.5	-0.0	-0.8	-6.0
				J	-10.6	-2.2	-2.4	-0.0	0.8	-4.8
285	1	2	SX(RS)	I	8.9	3.8	4.6	1.6	6.6	5.7
				J	8.9	3.8	4.6	1.6	4.2	7.0
			SY(RS)	I	2.5	6.3	0.1	2.9	0.1	1.7
				J	2.5	6.3	0.1	2.9	0.1	2.0
			RC ENV~1 Max	I	3.2	5.5	3.9	3.0	9.5	3.4
				J	3.6	5.5	5.1	3.0	7.2	5.1
			Min	I	-14.9	-7.1	-5.4	-2.8	-3.7	-8.0
				J	-14.4	-7.1	-4.2	-2.8	-1.3	-8.8
			RC ENV~2 Max	I	-5.6	0.3	0.6	0.2	4.8	-1.5
				J	-5.2	0.3	1.7	0.2	4.2	-1.7
			Min	I	-10.6	-2.2	-2.4	-0.0	0.8	-4.8
				J	-10.3	-2.2	-1.2	-0.0	1.8	-3.6
286	1	2	SX(RS)	I	8.7	3.7	4.7	1.6	4.2	7.0
				J	8.7	3.7	4.7	1.6	2.1	8.5
			SY(RS)	I	2.5	6.0	0.1	2.9	0.1	2.0
				J	2.5	6.0	0.1	2.9	0.1	5.1
			RC ENV~1 Max	I	3.4	5.2	5.1	3.0	7.2	5.1
				J	3.8	5.2	6.3	3.0	4.5	7.0
			Min	I	-14.4	-6.8	-4.3	-2.8	-1.3	-8.8
				J	-13.9	-6.8	-3.1	-2.8	0.4	-9.9
			RC ENV~2 Max	I	-5.2	0.3	1.7	0.2	4.2	-1.7
				J	-4.8	0.3	2.9	0.2	2.9	-1.0
			Min	I	-10.3	-2.2	-1.2	-0.0	1.8	-3.6
				J	-9.9	-2.2	-0.0	-0.0	2.1	-2.8
287	1	2	SX(RS)	I	8.6	3.7	4.8	1.6	2.1	8.5
				J	8.6	3.7	4.8	1.6	2.0	10.1
			SY(RS)	I	2.5	5.7	0.1	2.9	0.1	5.1
				J	2.5	5.7	0.1	2.9	0.2	8.2

			RC ENV~1 Max	I	3.7	4.9	6.4	3.0	4.5	7.0
				J	4.0	4.9	7.5	3.0	3.2	9.1
			Min	I	-13.9	-6.5	-3.2	-2.8	0.4	-9.9
				J	-13.4	-6.5	-2.1	-2.8	-0.7	-11.1
			RC ENV~2 Max	I	-4.8	0.3	2.9	0.2	2.9	-1.0
				J	-4.5	0.3	4.0	0.2	1.8	-0.1
			Min	I	-9.9	-2.2	-0.0	-0.0	2.1	-2.8
				J	-9.5	-2.2	1.1	-0.0	1.0	-2.3
288	1	2	SX(RS)	I	8.5	3.6	4.9	1.6	2.0	10.1
				J	8.5	3.6	4.9	1.6	4.2	11.8
			SY(RS)	I	2.5	5.3	0.1	2.9	0.2	8.2
				J	2.5	5.3	0.1	2.9	0.2	11.1
			RC ENV~1 Max	I	3.9	4.5	7.6	3.0	3.2	9.1
				J	4.3	4.5	8.8	3.0	3.6	11.3
			Min	I	-13.4	-6.1	-2.1	-2.8	-0.7	-11.1
				J	-12.9	-6.1	-1.0	-2.8	-4.7	-12.4
			RC ENV~2 Max	I	-4.5	0.3	4.0	0.2	1.8	-0.1
				J	-4.1	0.3	5.2	0.2	0.9	0.9
			Min	I	-9.5	-2.2	1.1	-0.0	1.0	-2.3
				J	-9.1	-2.2	2.3	-0.0	-1.5	-2.2
289	1	2	SX(RS)	I	8.3	3.6	5.0	1.6	4.2	11.8
				J	8.3	3.6	5.0	1.6	6.7	13.6
			SY(RS)	I	2.5	4.9	0.1	2.9	0.2	11.1
				J	2.5	4.9	0.1	2.9	0.3	13.7
			RC ENV~1 Max	I	4.2	4.1	8.9	3.0	3.6	11.3
				J	4.6	4.1	10.0	3.0	3.8	13.6
			Min	I	-12.9	-5.7	-1.1	-2.8	-4.7	-12.4
				J	-12.5	-5.7	0.1	-2.8	-9.7	-13.8
			RC ENV~2 Max	I	-4.1	0.3	5.2	0.2	0.9	0.9
				J	-3.7	0.3	6.4	0.2	-0.7	2.0
			Min	I	-9.1	-2.2	2.3	-0.0	-1.5	-2.2
				J	-8.8	-2.2	3.4	-0.0	-4.6	-2.2
290	1	2	SX(RS)	I	8.2	3.6	5.1	1.6	6.7	13.6
				J	8.2	3.6	5.1	1.6	9.4	15.4
			SY(RS)	I	2.5	4.4	0.1	2.9	0.3	13.7
				J	2.5	4.4	0.1	2.9	0.4	16.0
			RC ENV~1 Max	I	4.4	3.6	10.1	3.0	3.8	13.6
				J	4.8	3.6	11.3	3.0	3.4	16.3
			Min	I	-12.5	-5.2	0.0	-2.8	-9.7	-13.8
				J	-12.0	-5.2	1.2	-2.8	-15.5	-15.7
			RC ENV~2 Max	I	-3.7	0.3	6.4	0.2	-0.7	2.0
				J	-3.3	0.3	7.5	0.2	-2.8	3.2
			Min	I	-8.8	-2.2	3.4	-0.0	-4.6	-2.2
				J	-8.4	-2.2	4.6	-0.0	-8.4	-2.4
291	1	2	SX(RS)	I	8.3	3.6	5.0	1.6	6.7	13.6
				J	8.3	3.6	5.0	1.6	4.2	11.8
			SY(RS)	I	2.5	4.9	0.1	2.9	0.3	13.7
				J	2.5	4.9	0.1	2.9	0.2	11.1
			RC ENV~1 Max	I	4.5	5.7	-0.1	2.8	3.7	13.6
				J	4.1	5.7	1.0	2.8	3.6	11.2
			Min	I	-14.3	-4.0	-10.1	-3.1	-9.8	-13.8
				J	-14.8	-4.0	-8.9	-3.1	-4.8	-12.4
			RC ENV~2 Max	I	-2.3	2.2	-3.7	-0.1	-1.1	1.9
				J	-2.7	2.2	-2.5	-0.1	0.6	0.9
			Min	I	-10.0	0.2	-6.5	-0.3	-5.0	-1.9
				J	-10.3	0.2	-5.4	-0.3	-1.7	-2.2
292	1	2	SX(RS)	I	8.5	3.6	4.9	1.6	4.2	11.8
				J	8.5	3.6	4.9	1.6	2.0	10.1
			SY(RS)	I	2.5	5.3	0.1	2.9	0.2	11.1

				J	2.5	5.3	0.1	2.9	0.2	8.2
			RC ENV~1 Max	I	4.2	6.2	0.9	2.8	3.6	11.2
				J	3.9	6.2	2.1	2.8	3.2	9.1
			Min	I	-14.8	-4.5	-8.8	-3.1	-4.8	-12.4
				J	-15.2	-4.5	-7.7	-3.1	-0.7	-11.1
			RC ENV~2 Max	I	-2.7	2.2	-2.5	-0.1	0.6	0.9
				J	-3.1	2.2	-1.3	-0.1	1.7	0.0
			Min	I	-10.3	0.2	-5.4	-0.3	-1.7	-2.2
				J	-10.7	0.2	-4.2	-0.3	0.8	-2.5
293	1	2	SX(RS)	I	8.6	3.7	4.8	1.6	2.0	10.1
				J	8.6	3.7	4.8	1.6	2.1	8.5
			SY(RS)	I	2.5	5.7	0.1	2.9	0.2	8.2
				J	2.5	5.7	0.1	2.9	0.1	5.1
			RC ENV~1 Max	I	4.0	6.6	2.0	2.8	3.2	9.1
				J	3.6	6.6	3.2	2.8	4.5	7.0
			Min	I	-15.2	-4.9	-7.6	-3.1	-0.7	-11.1
				J	-15.7	-4.9	-6.4	-3.1	0.4	-10.0
			RC ENV~2 Max	I	-3.1	2.2	-1.3	-0.1	1.7	0.0
				J	-3.4	2.2	-0.2	-0.1	2.8	-0.9
			Min	I	-10.7	0.2	-4.2	-0.3	0.8	-2.5
				J	-11.1	0.2	-3.0	-0.3	2.1	-3.2
294	1	2	SX(RS)	I	8.7	3.7	4.7	1.6	2.1	8.5
				J	8.7	3.7	4.7	1.6	4.2	7.0
			SY(RS)	I	2.5	6.0	0.1	2.9	0.1	5.1
				J	2.5	6.0	0.1	2.9	0.1	2.0
			RC ENV~1 Max	I	3.8	6.9	3.1	2.8	4.5	7.0
				J	3.4	6.9	4.2	2.8	7.2	5.0
			Min	I	-15.7	-5.2	-6.4	-3.1	0.4	-10.0
				J	-16.2	-5.2	-5.2	-3.1	-1.2	-8.9
			RC ENV~2 Max	I	-3.4	2.2	-0.2	-0.1	2.8	-0.9
				J	-3.8	2.2	1.0	-0.1	4.2	-1.7
			Min	I	-11.1	0.2	-3.0	-0.3	2.1	-3.2
				J	-11.5	0.2	-1.9	-0.3	1.9	-3.9
295	1	2	SX(RS)	I	8.9	3.8	4.6	1.6	4.2	7.0
				J	8.9	3.8	4.6	1.6	6.6	5.7
			SY(RS)	I	2.5	6.3	0.1	2.9	0.1	2.0
				J	2.5	6.3	0.1	2.9	0.1	1.7
			RC ENV~1 Max	I	3.5	7.1	4.2	2.8	7.2	5.0
				J	3.2	7.1	5.3	2.8	9.6	3.3
			Min	I	-16.2	-5.4	-5.1	-3.1	-1.2	-8.9
				J	-16.7	-5.4	-3.9	-3.1	-3.7	-8.2
			RC ENV~2 Max	I	-3.8	2.2	1.0	-0.1	4.2	-1.7
				J	-4.2	2.2	2.1	-0.1	4.9	-2.4
			Min	I	-11.5	0.2	-1.9	-0.3	1.9	-3.9
				J	-11.8	0.2	-0.7	-0.3	1.0	-4.7
296	1	2	SX(RS)	I	9.0	3.8	4.6	1.6	6.6	5.7
				J	9.0	3.8	4.6	1.6	9.0	5.0
			SY(RS)	I	2.5	6.4	0.1	2.9	0.1	1.7
				J	2.5	6.4	0.1	2.9	0.1	5.1
			RC ENV~1 Max	I	3.3	7.3	5.2	2.8	9.6	3.3
				J	2.9	7.3	6.4	2.8	11.3	2.2
			Min	I	-16.7	-5.6	-3.9	-3.1	-3.7	-8.2
				J	-17.2	-5.6	-2.7	-3.1	-6.8	-8.3
			RC ENV~2 Max	I	-4.2	2.2	2.1	-0.1	4.9	-2.4
				J	-4.6	2.2	3.3	-0.1	4.9	-2.6
			Min	I	-11.8	0.2	-0.7	-0.3	1.0	-4.7
				J	-12.2	0.2	0.4	-0.3	-0.5	-5.9
297	1	2	SX(RS)	I	9.2	3.8	4.5	1.6	9.0	5.0
				J	9.2	3.8	4.5	1.6	11.4	5.1

			SY(RS)	I	2.5	6.5	0.1	2.9	0.1	5.1
				J	2.5	6.5	0.1	2.9	0.2	8.6
			RC ENV~1 Max	I	3.1	7.4	6.3	2.8	11.3	2.2
				J	2.7	7.4	7.5	2.8	12.4	5.2
			Min	I	-17.2	-5.7	-2.6	-3.1	-6.8	-8.3
				J	-17.7	-5.7	-1.5	-3.1	-10.5	-11.9
			RC ENV~2 Max	I	-4.6	2.2	3.3	-0.1	4.9	-2.6
				J	-4.9	2.2	4.5	-0.1	4.4	-2.7
			Min	I	-12.2	0.2	0.4	-0.3	-0.5	-5.9
				J	-12.6	0.2	1.6	-0.3	-2.6	-7.1
298	1	2	SX(RS)	I	9.4	3.8	4.4	1.6	11.4	5.1
				J	9.4	3.8	4.4	1.6	13.8	5.9
			SY(RS)	I	2.5	6.6	0.1	2.9	0.2	8.6
				J	2.5	6.6	0.1	2.9	0.3	12.1
			RC ENV~1 Max	I	2.9	7.4	7.4	2.8	12.4	5.2
				J	2.5	7.4	8.6	2.8	12.8	8.3
			Min	I	-17.7	-5.7	-1.4	-3.1	-10.5	-11.9
				J	-18.2	-5.7	-0.2	-3.1	-14.8	-15.9
			RC ENV~2 Max	I	-4.9	2.2	4.5	-0.1	4.4	-2.7
				J	-5.3	2.2	5.6	-0.1	3.2	-2.8
			Min	I	-12.6	0.2	1.6	-0.3	-2.6	-7.1
				J	-13.0	0.2	2.8	-0.3	-5.3	-8.3
299	1	2	SX(RS)	I	8.3	3.6	5.0	1.6	6.8	13.6
				J	8.3	3.6	5.0	1.6	4.2	11.8
			SY(RS)	I	2.5	4.9	0.1	2.9	0.3	13.7
				J	2.5	4.9	0.1	2.9	0.2	11.1
			RC ENV~1 Max	I	4.5	5.7	-0.1	2.8	3.7	13.6
				J	4.2	5.7	1.1	2.8	3.6	11.3
			Min	I	-12.1	-4.0	-10.1	-3.1	-9.8	-13.8
				J	-12.5	-4.0	-8.9	-3.1	-4.7	-12.3
			RC ENV~2 Max	I	-3.3	2.4	-3.7	-0.1	-1.1	2.2
				J	-3.7	2.4	-2.6	-0.1	0.6	1.1
			Min	I	-8.3	-0.1	-6.6	-0.4	-5.1	-2.0
				J	-8.7	-0.1	-5.5	-0.4	-1.8	-2.1
300	1	2	SX(RS)	I	8.5	3.6	4.9	1.6	4.2	11.8
				J	8.5	3.6	4.9	1.6	2.0	10.1
			SY(RS)	I	2.5	5.3	0.1	2.9	0.2	11.1
				J	2.5	5.3	0.1	2.9	0.2	8.2
			RC ENV~1 Max	I	4.3	6.2	1.0	2.8	3.6	11.3
				J	3.9	6.2	2.1	2.8	3.2	9.1
			Min	I	-12.6	-4.5	-8.8	-3.1	-4.7	-12.3
				J	-13.0	-4.5	-7.7	-3.1	-0.7	-11.1
			RC ENV~2 Max	I	-3.7	2.4	-2.6	-0.1	0.6	1.1
				J	-4.1	2.4	-1.4	-0.1	1.7	0.0
			Min	I	-8.7	-0.1	-5.5	-0.4	-1.8	-2.1
				J	-9.1	-0.1	-4.3	-0.4	0.8	-2.2
301	1	2	SX(RS)	I	8.6	3.7	4.8	1.6	2.0	10.1
				J	8.6	3.7	4.8	1.6	2.1	8.5
			SY(RS)	I	2.5	5.7	0.1	2.9	0.2	8.2
				J	2.5	5.7	0.1	2.9	0.1	5.1
			RC ENV~1 Max	I	4.0	6.6	2.1	2.8	3.2	9.1
				J	3.7	6.6	3.2	2.8	4.5	7.0
			Min	I	-13.1	-4.9	-7.6	-3.1	-0.7	-11.1
				J	-13.5	-4.9	-6.4	-3.1	0.4	-9.9
			RC ENV~2 Max	I	-4.1	2.4	-1.4	-0.1	1.7	0.0
				J	-4.4	2.4	-0.2	-0.1	2.9	-1.0
			Min	I	-9.1	-0.1	-4.3	-0.4	0.8	-2.2
				J	-9.4	-0.1	-3.2	-0.4	2.1	-2.9
302	1	2	SX(RS)	I	8.7	3.7	4.7	1.6	2.1	8.5
				J	8.7	3.7	4.7	1.6	4.3	7.0

			SY(RS)	I	2.5	6.0	0.1	2.9	0.1	5.1
				J	2.5	6.0	0.1	2.9	0.1	2.0
			RC ENV~1 Max	I	3.8	6.9	3.1	2.8	4.5	7.0
				J	3.4	6.9	4.3	2.8	7.2	5.0
			Min	I	-13.6	-5.2	-6.3	-3.1	0.4	-9.9
				J	-14.0	-5.2	-5.2	-3.1	-1.3	-8.9
			RC ENV~2 Max	I	-4.4	2.4	-0.2	-0.1	2.9	-1.0
				J	-4.8	2.4	0.9	-0.1	4.3	-1.8
			Min	I	-9.4	-0.1	-3.2	-0.4	2.1	-2.9
				J	-9.8	-0.1	-2.0	-0.4	1.9	-3.7
303	1	2	SX(RS)	I	8.9	3.8	4.7	1.6	4.3	7.0
				J	8.9	3.8	4.7	1.6	6.7	5.7
			SY(RS)	I	2.5	6.3	0.1	2.9	0.1	2.0
				J	2.5	6.3	0.1	2.9	0.1	1.7
			RC ENV~1 Max	I	3.6	7.1	4.2	2.8	7.2	5.0
				J	3.2	7.1	5.4	2.8	9.6	3.3
			Min	I	-14.2	-5.4	-5.1	-3.1	-1.3	-8.9
				J	-14.5	-5.4	-3.9	-3.1	-3.7	-8.1
			RC ENV~2 Max	I	-4.8	2.4	0.9	-0.1	4.3	-1.8
				J	-5.2	2.4	2.1	-0.1	5.0	-1.7
			Min	I	-9.8	-0.1	-2.0	-0.4	1.9	-3.7
				J	-10.2	-0.1	-0.8	-0.4	1.1	-5.0
304	1	2	SX(RS)	I	9.0	3.8	4.6	1.6	6.7	5.7
				J	9.0	3.8	4.6	1.6	9.1	5.0
			SY(RS)	I	2.5	6.4	0.1	2.9	0.1	1.7
				J	2.5	6.4	0.1	2.9	0.1	5.1
			RC ENV~1 Max	I	3.4	7.3	5.3	2.8	9.6	3.3
				J	3.0	7.3	6.4	2.8	11.3	2.2
			Min	I	-14.7	-5.6	-3.8	-3.1	-3.7	-8.1
				J	-15.1	-5.6	-2.7	-3.1	-6.9	-8.9
			RC ENV~2 Max	I	-5.2	2.4	2.1	-0.1	5.0	-1.7
				J	-5.6	2.4	3.3	-0.1	5.2	-1.7
			Min	I	-10.2	-0.1	-0.8	-0.4	1.1	-5.0
				J	-10.6	-0.1	0.3	-0.4	-0.4	-6.3
305	1	2	SX(RS)	I	9.2	3.8	4.5	1.6	9.1	5.0
				J	9.2	3.8	4.5	1.6	11.5	5.0
			SY(RS)	I	2.5	6.5	0.1	2.9	0.1	5.1
				J	2.5	6.5	0.1	2.9	0.2	8.6
			RC ENV~1 Max	I	3.2	7.4	6.4	2.8	11.3	2.2
				J	2.8	7.4	7.5	2.8	12.4	5.3
			Min	I	-15.2	-5.7	-2.6	-3.1	-6.9	-8.9
				J	-15.6	-5.7	-1.4	-3.1	-10.6	-11.9
			RC ENV~2 Max	I	-5.6	2.4	3.3	-0.1	5.2	-1.7
				J	-5.9	2.4	4.4	-0.1	4.7	-1.6
			Min	I	-10.6	-0.1	0.3	-0.4	-0.4	-6.3
				J	-10.9	-0.1	1.5	-0.4	-2.5	-7.6
306	1	2	SX(RS)	I	9.4	3.8	4.4	1.6	11.5	5.0
				J	9.4	3.8	4.4	1.6	13.8	5.9
			SY(RS)	I	2.5	6.6	0.1	2.9	0.2	8.6
				J	2.5	6.6	0.1	2.9	0.3	12.1
			RC ENV~1 Max	I	3.0	7.4	7.4	2.8	12.4	5.3
				J	2.6	7.4	8.6	2.8	12.8	8.3
			Min	I	-15.8	-5.7	-1.4	-3.1	-10.6	-11.9
				J	-16.2	-5.7	-0.2	-3.1	-14.9	-15.9
			RC ENV~2 Max	I	-5.9	2.4	4.4	-0.1	4.7	-1.6
				J	-6.3	2.4	5.6	-0.1	3.5	-1.6
			Min	I	-10.9	-0.1	1.5	-0.4	-2.5	-7.6
				J	-11.3	-0.1	2.7	-0.4	-5.2	-8.9
307	1	2	SX(RS)	I	8.3	3.6	5.0	1.6	6.8	13.6

				J	8.3	3.6	5.0	1.6	4.2	11.8
			SY(RS)	I	2.5	4.9	0.1	2.9	0.3	13.7
				J	2.5	4.9	0.1	2.9	0.2	11.1
			RC ENV~1 Max	I	4.5	4.1	-0.1	3.0	3.8	13.9
				J	4.1	4.1	1.1	3.0	3.6	12.4
			Min	I	-13.3	-5.7	-10.1	-2.8	-9.7	-13.5
				J	-13.8	-5.7	-8.9	-2.8	-4.7	-11.2
			RC ENV~2 Max	I	-1.7	-0.1	-3.7	0.3	-1.1	2.0
				J	-2.1	-0.1	-2.5	0.3	0.6	2.2
			Min	I	-9.4	-2.1	-6.6	0.0	-5.0	-1.8
				J	-9.7	-2.1	-5.4	0.0	-1.7	-0.8
308	1	2	SX(RS)	I	8.5	3.6	4.9	1.6	4.2	11.8
				J	8.5	3.6	4.9	1.6	2.0	10.1
			SY(RS)	I	2.5	5.3	0.1	2.9	0.2	11.1
				J	2.5	5.3	0.1	2.9	0.2	8.2
			RC ENV~1 Max	I	4.3	4.5	1.0	3.0	3.6	12.4
				J	3.9	4.5	2.2	3.0	3.2	11.1
			Min	I	-13.8	-6.1	-8.8	-2.8	-4.7	-11.2
				J	-14.3	-6.1	-7.7	-2.8	-0.7	-9.1
			RC ENV~2 Max	I	-2.1	-0.1	-2.5	0.3	0.6	2.2
				J	-2.5	-0.1	-1.4	0.3	1.7	2.5
			Min	I	-9.7	-2.1	-5.4	0.0	-1.7	-0.8
				J	-10.1	-2.1	-4.2	0.0	0.8	-0.0
309	1	2	SX(RS)	I	8.6	3.7	4.8	1.6	2.0	10.1
				J	8.6	3.7	4.8	1.6	2.1	8.5
			SY(RS)	I	2.5	5.7	0.1	2.9	0.2	8.2
				J	2.5	5.7	0.1	2.9	0.1	5.1
			RC ENV~1 Max	I	4.0	4.9	2.1	3.0	3.2	11.1
				J	3.6	4.9	3.2	3.0	4.5	9.9
			Min	I	-14.3	-6.5	-7.6	-2.8	-0.7	-9.1
				J	-14.8	-6.5	-6.4	-2.8	0.4	-7.0
			RC ENV~2 Max	I	-2.5	-0.1	-1.4	0.3	1.7	2.5
				J	-2.8	-0.1	-0.2	0.3	2.9	3.1
			Min	I	-10.1	-2.1	-4.2	0.0	0.8	-0.0
				J	-10.5	-2.1	-3.1	0.0	2.1	0.8
310	1	2	SX(RS)	I	8.7	3.7	4.7	1.6	2.1	8.5
				J	8.7	3.7	4.7	1.6	4.3	7.0
			SY(RS)	I	2.5	6.0	0.1	2.9	0.1	5.1
				J	2.5	6.0	0.1	2.9	0.1	2.0
			RC ENV~1 Max	I	3.8	5.2	3.2	3.0	4.5	9.9
				J	3.4	5.2	4.3	3.0	7.2	8.9
			Min	I	-14.8	-6.8	-6.3	-2.8	0.4	-7.0
				J	-15.2	-6.8	-5.2	-2.8	-1.3	-5.0
			RC ENV~2 Max	I	-2.8	-0.1	-0.2	0.3	2.9	3.1
				J	-3.2	-0.1	1.0	0.3	4.2	3.7
			Min	I	-10.5	-2.1	-3.1	0.0	2.1	0.8
				J	-10.9	-2.1	-1.9	0.0	1.9	1.6
311	1	2	SX(RS)	I	8.9	3.8	4.7	1.6	4.3	7.0
				J	8.9	3.8	4.7	1.6	6.7	5.7
			SY(RS)	I	2.5	6.3	0.1	2.9	0.1	2.0
				J	2.5	6.3	0.1	2.9	0.1	1.7
			RC ENV~1 Max	I	3.6	5.5	4.2	3.0	7.2	8.9
				J	3.2	5.5	5.4	3.0	9.6	8.1
			Min	I	-15.2	-7.1	-5.1	-2.8	-1.3	-5.0
				J	-15.7	-7.1	-3.9	-2.8	-3.8	-3.4
			RC ENV~2 Max	I	-3.2	-0.1	1.0	0.3	4.2	3.7
				J	-3.6	-0.1	2.1	0.3	4.9	4.5
			Min	I	-10.9	-2.1	-1.9	0.0	1.9	1.6
				J	-11.2	-2.1	-0.7	0.0	1.1	2.3

312	1	2	SX(RS)	I	9.0	3.8	4.6	1.6	6.7	5.7
				J	9.0	3.8	4.6	1.6	9.1	5.0
			SY(RS)	I	2.5	6.4	0.1	2.9	0.1	1.7
				J	2.5	6.4	0.1	2.9	0.1	5.1
			RC ENV~1 Max	I	3.3	5.6	5.3	3.0	9.6	8.1
				J	3.0	5.6	6.5	3.0	11.3	7.9
			Min	I	-15.7	-7.2	-3.8	-2.8	-3.8	-3.4
				J	-16.2	-7.2	-2.7	-2.8	-6.9	-2.3
			RC ENV~2 Max	I	-3.6	-0.1	2.1	0.3	4.9	4.5
				J	-4.0	-0.1	3.3	0.3	5.0	5.6
			Min	I	-11.2	-2.1	-0.7	0.0	1.1	2.3
				J	-11.6	-2.1	0.4	0.0	-0.4	2.3
313	1	2	SX(RS)	I	9.2	3.8	4.5	1.6	9.1	5.0
				J	9.2	3.8	4.5	1.6	11.5	5.0
			SY(RS)	I	2.5	6.5	0.1	2.9	0.1	5.1
				J	2.5	6.5	0.1	2.9	0.2	8.6
			RC ENV~1 Max	I	3.1	5.7	6.4	3.0	11.3	7.9
				J	2.8	5.7	7.6	3.0	12.3	11.8
			Min	I	-16.2	-7.3	-2.6	-2.8	-6.9	-2.3
				J	-16.7	-7.3	-1.4	-2.8	-10.7	-5.4
			RC ENV~2 Max	I	-4.0	-0.1	3.3	0.3	5.0	5.6
				J	-4.3	-0.1	4.4	0.3	4.5	6.7
			Min	I	-11.6	-2.1	0.4	0.0	-0.4	2.3
				J	-12.0	-2.1	1.6	0.0	-2.5	2.4
314	1	2	SX(RS)	I	9.4	3.8	4.4	1.6	11.5	5.0
				J	9.4	3.8	4.4	1.6	13.8	5.9
			SY(RS)	I	2.5	6.6	0.1	2.9	0.2	8.6
				J	2.5	6.6	0.1	2.9	0.3	12.1
			RC ENV~1 Max	I	2.9	5.8	7.5	3.0	12.3	11.8
				J	2.5	5.8	8.6	3.0	12.7	15.8
			Min	I	-16.7	-7.4	-1.3	-2.8	-10.7	-5.4
				J	-17.2	-7.4	-0.2	-2.8	-15.0	-8.5
			RC ENV~2 Max	I	-4.3	-0.1	4.4	0.3	4.5	6.7
				J	-4.7	-0.1	5.6	0.3	3.3	7.8
			Min	I	-12.0	-2.1	1.6	0.0	-2.5	2.4
				J	-12.4	-2.1	2.7	0.0	-5.2	2.4
315	1	2	SX(RS)	I	4.6	4.1	0.2	4.4	0.6	3.3
				J	4.6	4.1	0.2	4.4	0.5	1.9
			SY(RS)	I	6.7	2.5	5.3	0.9	8.5	9.8
				J	6.7	2.5	5.3	0.9	5.7	8.9
			RC ENV~1 Max	I	3.0	9.8	-2.8	2.4	9.4	11.2
				J	3.0	7.5	0.9	2.4	10.3	8.9
			Min	I	-10.3	-0.9	-19.0	-6.6	-7.7	-8.3
				J	-10.3	-1.7	-10.1	-6.6	-1.5	-9.0
			RC ENV~2 Max	I	-1.7	7.0	-6.1	-0.6	1.7	3.7
				J	-1.7	5.3	-3.3	-0.6	7.4	0.6
			Min	I	-7.3	1.6	-13.8	-4.7	0.6	-0.0
				J	-7.3	1.1	-7.3	-4.7	3.1	-0.8
316	1	2	SX(RS)	I	4.6	3.1	0.2	4.4	0.5	1.9
				J	4.6	3.1	0.2	4.4	0.4	2.0
			SY(RS)	I	5.8	2.4	5.3	0.9	5.7	8.9
				J	5.8	2.4	5.3	0.9	2.8	8.0
			RC ENV~1 Max	I	2.1	7.5	0.9	2.4	10.3	8.9
				J	2.1	5.1	4.7	2.4	13.4	6.9
			Min	I	-10.1	-0.7	-10.1	-6.6	-1.5	-9.0
				J	-10.1	-1.5	-5.9	-6.6	2.7	-9.2
			RC ENV~2 Max	I	-1.7	5.3	-3.3	-0.6	7.4	0.6
				J	-1.7	3.6	-0.5	-0.6	9.7	-1.1
			Min	I	-7.3	1.1	-7.3	-4.7	3.1	-0.8
				J	-7.3	0.6	-0.9	-4.7	4.1	-2.0

317	1	2	SX(RS)	I	4.6	2.1	0.2	4.4	0.4	2.0
				J	4.6	2.1	0.2	4.4	0.3	2.7
			SY(RS)	I	5.1	2.4	5.3	0.9	2.8	8.0
				J	5.1	2.4	5.3	0.9	0.6	7.0
			RC ENV~1 Max	I	1.5	5.1	4.7	2.4	13.4	6.9
				J	1.5	3.2	8.4	2.4	11.7	5.2
			Min	I	-10.1	-0.9	-5.9	-6.6	2.7	-9.2
				J	-10.1	-1.7	-2.1	-6.6	4.2	-8.8
			RC ENV~2 Max	I	-1.7	3.6	-0.5	-0.6	9.7	-1.1
				J	-1.7	1.9	5.5	-0.6	8.4	-1.4
			Min	I	-7.3	0.6	-0.9	-4.7	4.1	-2.0
				J	-7.3	0.1	2.4	-4.7	3.6	-3.5
318	1	2	SX(RS)	I	4.6	1.2	0.2	4.4	0.3	2.7
				J	4.6	1.2	0.2	4.4	0.2	3.0
			SY(RS)	I	4.9	2.6	5.3	0.9	0.6	7.0
				J	4.9	2.6	5.3	0.9	3.0	5.8
			RC ENV~1 Max	I	1.3	3.3	8.4	2.4	11.7	5.2
				J	1.3	2.5	16.6	2.4	5.1	3.8
			Min	I	-10.1	-1.8	-2.1	-6.6	4.2	-8.8
				J	-10.1	-2.7	1.6	-6.6	-0.9	-7.7
			RC ENV~2 Max	I	-1.7	1.9	5.5	-0.6	8.4	-1.4
				J	-1.7	0.4	12.0	-0.6	3.7	-1.3
			Min	I	-7.3	0.1	2.4	-4.7	3.6	-3.5
				J	-7.3	-0.5	5.2	-4.7	1.5	-4.1
319	1	2	SX(RS)	I	4.6	1.5	0.2	4.4	0.2	3.0
				J	4.6	1.5	0.2	4.4	0.1	2.8
			SY(RS)	I	5.2	2.9	5.3	0.9	3.0	5.8
				J	5.2	2.9	5.3	0.9	5.9	4.3
			RC ENV~1 Max	I	1.6	2.8	16.6	2.4	5.1	3.8
				J	1.6	2.0	25.4	2.4	3.2	2.6
			Min	I	-10.1	-3.0	1.6	-6.6	-0.9	-7.7
				J	-10.1	-3.8	5.4	-6.6	-8.5	-6.0
			RC ENV~2 Max	I	-1.7	0.4	12.0	-0.6	3.7	-1.3
				J	-1.7	-0.8	18.4	-0.6	-2.1	-0.9
			Min	I	-7.3	-0.5	5.2	-4.7	1.5	-4.1
				J	-7.3	-1.5	8.1	-4.7	-4.6	-3.8
320	1	2	SX(RS)	I	4.6	2.7	0.2	4.4	0.1	2.8
				J	4.6	2.7	0.2	4.4	0.1	2.4
			SY(RS)	I	5.9	3.3	5.3	0.9	5.9	4.3
				J	5.9	3.3	5.3	0.9	8.7	2.6
			RC ENV~1 Max	I	2.3	2.5	25.4	2.4	3.2	2.6
				J	2.3	1.6	34.3	2.4	-0.7	1.6
			Min	I	-10.1	-4.2	5.4	-6.6	-8.5	-6.0
				J	-10.1	-5.0	9.1	-6.6	-22.5	-3.7
			RC ENV~2 Max	I	-1.7	-0.8	18.4	-0.6	-2.1	-0.9
				J	-1.7	-1.5	24.8	-0.6	-7.3	-0.3
			Min	I	-7.3	-1.5	8.1	-4.7	-4.6	-3.8
				J	-7.3	-3.1	10.9	-4.7	-16.3	-2.6
321	1	2	SX(RS)	I	4.6	3.8	0.0	0.0	0.1	4.6
				J	4.6	3.8	0.0	0.0	0.1	6.5
			SY(RS)	I	3.1	1.4	3.8	2.0	5.1	2.1
				J	3.1	1.4	3.8	2.0	3.1	1.4
			RC ENV~1 Max	I	0.8	5.9	-5.9	2.0	2.1	2.3
				J	0.8	5.1	-2.2	2.0	4.4	3.3
			Min	I	-10.0	-1.8	-22.8	-1.9	-8.1	-7.5
				J	-10.0	-2.6	-13.9	-1.9	-1.8	-10.0
			RC ENV~2 Max	I	-2.0	4.2	-7.5	0.1	-2.5	-1.1
				J	-2.0	2.5	-4.7	0.1	2.3	-1.7
			Min	I	-7.2	1.3	-16.5	0.0	-4.9	-5.3

				J	-7.2	0.8	-10.1	0.0	0.9	-7.1
322	1	2	SX(RS)	I	4.6	1.9	0.0	0.0	0.1	6.5
				J	4.6	1.9	0.0	0.0	0.0	7.5
			SY(RS)	I	1.6	1.6	3.8	2.0	3.1	1.4
				J	1.6	1.6	3.8	2.0	1.0	0.5
			RC ENV~1 Max	I	0.8	3.5	-2.2	2.0	4.4	3.3
				J	0.8	2.4	1.6	2.0	8.3	3.8
			Min	I	-10.0	-0.7	-13.9	-1.9	-1.8	-10.0
				J	-10.0	-1.5	-6.0	-1.9	2.5	-11.3
			RC ENV~2 Max	I	-2.0	2.5	-4.7	0.1	2.3	-1.7
				J	-2.0	0.8	-1.8	0.1	6.0	-1.9
			Min	I	-7.2	0.8	-10.1	0.0	0.9	-7.1
				J	-7.2	0.2	-3.6	0.0	2.6	-8.0
323	1	2	SX(RS)	I	4.6	0.0	0.0	0.0	0.0	7.5
				J	4.6	0.0	0.0	0.0	0.0	7.5
			SY(RS)	I	0.0	1.7	3.8	2.0	1.0	0.5
				J	0.0	1.7	3.8	2.0	1.0	0.5
			RC ENV~1 Max	I	0.8	2.2	1.6	2.0	8.3	3.8
				J	0.8	1.3	5.3	2.0	8.6	3.8
			Min	I	-10.0	-1.3	-6.0	-1.9	2.5	-11.3
				J	-10.0	-2.1	-2.3	-1.9	2.7	-11.3
			RC ENV~2 Max	I	-2.0	0.8	-1.8	0.1	6.0	-1.9
				J	-2.0	-0.3	2.8	0.1	6.2	-1.9
			Min	I	-7.2	0.2	-3.6	0.0	2.6	-8.0
				J	-7.2	-0.9	1.0	0.0	2.8	-8.0
324	1	2	SX(RS)	I	4.6	1.9	0.0	0.0	0.0	7.5
				J	4.6	1.9	0.0	0.0	0.0	6.5
			SY(RS)	I	1.6	1.6	3.8	2.0	1.0	0.5
				J	1.6	1.6	3.8	2.0	3.1	1.4
			RC ENV~1 Max	I	0.8	1.5	5.3	2.0	8.6	3.8
				J	0.8	0.7	12.8	2.0	4.9	3.3
			Min	I	-10.0	-2.3	-2.3	-1.9	2.7	-11.3
				J	-10.0	-3.6	1.5	-1.9	-1.2	-10.0
			RC ENV~2 Max	I	-2.0	-0.3	2.8	0.1	6.2	-1.9
				J	-2.0	-0.8	9.2	0.1	3.0	-1.6
			Min	I	-7.2	-0.9	1.0	0.0	2.8	-8.0
				J	-7.2	-2.5	3.9	0.0	1.5	-7.1
325	1	2	SX(RS)	I	4.6	3.8	0.0	0.0	0.0	6.5
				J	4.6	3.8	0.0	0.0	0.0	4.6
			SY(RS)	I	3.1	1.4	3.8	2.0	3.1	1.4
				J	3.1	1.4	3.8	2.0	5.1	2.1
			RC ENV~1 Max	I	0.8	2.6	12.8	2.0	4.9	3.3
				J	0.8	1.8	21.7	2.0	3.1	2.2
			Min	I	-10.0	-5.0	1.5	-1.9	-1.2	-10.0
				J	-10.0	-5.9	5.2	-1.9	-7.2	-7.4
			RC ENV~2 Max	I	-2.0	-0.8	9.2	0.1	3.0	-1.6
				J	-2.0	-1.3	15.7	0.1	-1.4	-1.1
			Min	I	-7.2	-2.5	3.9	0.0	1.5	-7.1
				J	-7.2	-4.2	6.7	0.0	-3.8	-5.2
326	1	2	SX(RS)	I	4.6	5.6	0.0	0.0	0.0	4.6
				J	4.6	5.6	0.0	0.0	0.0	2.4
			SY(RS)	I	4.7	1.0	3.8	2.0	5.1	2.1
				J	4.7	1.0	3.8	2.0	7.2	2.6
			RC ENV~1 Max	I	0.9	3.6	21.7	2.0	3.1	2.2
				J	0.9	2.8	30.6	2.0	-0.8	1.6
			Min	I	-10.0	-7.7	5.2	-1.9	-7.2	-7.4
				J	-10.0	-8.5	9.0	-1.9	-19.5	-3.6
			RC ENV~2 Max	I	-2.0	-1.3	15.7	0.1	-1.4	-1.1
				J	-2.0	-1.9	22.1	0.1	-5.8	-0.2

			Min	I	-7.2	-4.2	6.7	0.0	-3.8	-5.2
				J	-7.2	-5.9	9.6	0.0	-14.1	-2.5
327	1	2	SX(RS)	I	4.6	1.5	0.2	4.4	0.2	2.8
				J	4.6	1.5	0.2	4.4	0.2	3.0
			SY(RS)	I	5.2	2.9	5.3	0.9	5.9	4.3
				J	5.2	2.9	5.3	0.9	3.0	5.8
			RC ENV~1 Max	I	1.0	3.8	-5.1	6.7	3.6	2.6
				J	1.0	2.9	-1.4	6.7	5.5	3.9
			Min	I	-11.2	-2.1	-25.1	-2.4	-8.1	-6.0
				J	-11.2	-2.9	-16.2	-2.4	-0.6	-7.7
			RC ENV~2 Max	I	-2.5	1.4	-7.9	4.7	-1.7	-0.8
				J	-2.5	0.4	-5.0	4.7	4.0	-1.2
			Min	I	-8.0	0.7	-18.1	0.7	-4.1	-3.7
				J	-8.0	-0.4	-11.7	0.7	1.8	-3.9
328	1	2	SX(RS)	I	4.6	1.2	0.2	4.4	0.2	3.0
				J	4.6	1.2	0.2	4.4	0.3	2.7
			SY(RS)	I	4.9	2.6	5.3	0.9	3.0	5.8
				J	4.9	2.6	5.3	0.9	0.6	7.0
			RC ENV~1 Max	I	0.7	2.6	-1.4	6.7	5.5	3.9
				J	0.7	1.8	2.4	6.7	11.9	5.3
			Min	I	-11.2	-2.6	-16.2	-2.4	-0.6	-7.7
				J	-11.2	-3.4	-8.2	-2.4	4.3	-8.7
			RC ENV~2 Max	I	-2.5	0.4	-5.0	4.7	4.0	-1.2
				J	-2.5	-0.2	-2.2	4.7	8.6	-1.2
			Min	I	-8.0	-0.4	-11.7	0.7	1.8	-3.9
				J	-8.0	-2.0	-5.3	0.7	3.8	-3.3
329	1	2	SX(RS)	I	4.6	2.1	0.2	4.4	0.3	2.7
				J	4.6	2.1	0.2	4.4	0.4	2.1
			SY(RS)	I	5.1	2.4	5.3	0.9	0.6	7.0
				J	5.1	2.4	5.3	0.9	2.8	8.0
			RC ENV~1 Max	I	0.9	1.6	2.4	6.7	11.9	5.3
				J	0.9	0.8	6.1	6.7	13.5	7.0
			Min	I	-11.2	-3.2	-8.2	-2.4	4.3	-8.7
				J	-11.2	-5.2	-4.4	-2.4	2.7	-9.1
			RC ENV~2 Max	I	-2.5	-0.2	-2.2	4.7	8.6	-1.2
				J	-2.5	-0.7	1.1	4.7	9.7	-0.9
			Min	I	-8.0	-2.0	-5.3	0.7	3.8	-3.3
				J	-8.0	-3.7	0.7	0.7	4.2	-1.8
330	1	2	SX(RS)	I	4.6	3.1	0.2	4.4	0.4	2.1
				J	4.6	3.1	0.2	4.4	0.5	1.9
			SY(RS)	I	5.8	2.4	5.3	0.9	2.8	8.0
				J	5.8	2.4	5.3	0.9	5.7	8.9
			RC ENV~1 Max	I	1.5	1.5	6.1	6.7	13.5	7.0
				J	1.5	0.7	10.4	6.7	10.2	9.0
			Min	I	-11.2	-5.2	-4.4	-2.4	2.7	-9.1
				J	-11.2	-7.6	-0.7	-2.4	-1.6	-8.9
			RC ENV~2 Max	I	-2.5	-0.7	1.1	4.7	9.7	-0.9
				J	-2.5	-1.2	7.6	4.7	7.3	0.9
			Min	I	-8.0	-3.7	0.7	0.7	4.2	-1.8
				J	-8.0	-5.4	3.5	0.7	3.0	-0.5
331	1	2	SX(RS)	I	4.6	4.1	0.2	4.4	0.5	1.9
				J	4.6	4.1	0.2	4.4	0.6	3.3
			SY(RS)	I	6.7	2.5	5.3	0.9	5.7	8.9
				J	6.7	2.5	5.3	0.9	8.5	9.8
			RC ENV~1 Max	I	2.4	1.7	10.4	6.7	10.2	9.0
				J	2.4	0.8	19.3	6.7	9.1	11.3
			Min	I	-11.2	-7.6	-0.7	-2.4	-1.6	-8.9
				J	-11.2	-10.0	3.1	-2.4	-8.0	-8.2
			RC ENV~2 Max	I	-2.5	-1.2	7.6	4.7	7.3	0.9

				J	-2.5	-1.7	14.0	4.7	1.5	4.1
			Min	I	-8.0	-5.4	3.5	0.7	3.0	-0.5
				J	-8.0	-7.1	6.4	0.7	0.3	0.3
332	1	2	SX(RS)	I	4.6	5.0	0.2	4.4	0.6	3.3
				J	4.6	5.0	0.2	4.4	0.7	5.7
			SY(RS)	I	7.8	2.5	5.3	0.9	8.5	9.8
				J	7.8	2.5	5.3	0.9	11.4	10.7
			RC ENV~1 Max	I	3.5	1.7	19.3	6.7	9.1	11.3
				J	3.5	0.9	28.2	6.7	6.4	14.2
			Min	I	-12.1	-10.0	3.1	-2.4	-8.0	-8.2
				J	-12.1	-12.3	6.8	-2.4	-16.4	-7.1
			RC ENV~2 Max	I	-2.5	-1.7	14.0	4.7	1.5	4.1
				J	-2.5	-2.3	20.4	4.7	-3.9	8.4
			Min	I	-8.0	-7.1	6.4	0.7	0.3	0.3
				J	-8.0	-8.7	9.2	0.7	-7.9	1.4
333	1	2	SX(RS)	I	4.6	4.1	0.2	4.4	0.6	3.3
				J	4.6	4.1	0.2	4.4	0.5	1.9
			SY(RS)	I	6.7	2.5	5.3	0.9	8.5	9.8
				J	6.7	2.5	5.3	0.9	5.7	8.9
			RC ENV~1 Max	I	2.6	0.8	-2.9	6.4	9.2	8.2
				J	2.6	1.6	0.8	6.4	10.1	8.9
			Min	I	-10.7	-9.4	-18.3	-2.4	-7.8	-11.4
				J	-10.7	-7.1	-9.7	-2.4	-1.5	-9.0
			RC ENV~2 Max	I	-2.7	-2.5	-6.8	4.5	1.7	-1.1
				J	-2.7	-1.9	-3.6	4.5	7.2	0.2
			Min	I	-7.2	-6.7	-13.3	1.4	0.7	-3.7
				J	-7.2	-5.1	-7.1	1.4	3.6	-0.6
334	1	2	SX(RS)	I	4.6	3.1	0.2	4.4	0.5	1.9
				J	4.6	3.1	0.2	4.4	0.4	2.0
			SY(RS)	I	5.8	2.4	5.3	0.9	5.7	8.9
				J	5.8	2.4	5.3	0.9	2.8	8.0
			RC ENV~1 Max	I	1.7	0.7	0.8	6.4	10.1	8.9
				J	1.7	1.5	4.6	6.4	13.0	9.1
			Min	I	-10.0	-7.1	-9.7	-2.4	-1.5	-9.0
				J	-10.0	-4.9	-6.0	-2.4	2.7	-7.0
			RC ENV~2 Max	I	-2.7	-1.9	-3.6	4.5	7.2	0.2
				J	-2.7	-1.3	-0.3	4.5	9.4	1.8
			Min	I	-7.2	-5.1	-7.1	1.4	3.6	-0.6
				J	-7.2	-3.5	-0.9	1.4	4.7	0.9
335	1	2	SX(RS)	I	4.6	2.1	0.2	4.4	0.4	2.0
				J	4.6	2.1	0.2	4.4	0.3	2.7
			SY(RS)	I	5.1	2.4	5.3	0.9	2.8	8.0
				J	5.1	2.4	5.3	0.9	0.6	7.0
			RC ENV~1 Max	I	1.1	0.8	4.6	6.4	13.0	9.1
				J	1.1	1.6	8.3	6.4	11.3	8.7
			Min	I	-10.0	-4.9	-6.0	-2.4	2.7	-7.0
				J	-10.0	-3.2	-2.2	-2.4	4.3	-5.3
			RC ENV~2 Max	I	-2.7	-1.3	-0.3	4.5	9.4	1.8
				J	-2.7	-0.6	5.4	4.5	8.2	3.2
			Min	I	-7.2	-3.5	-0.9	1.4	4.7	0.9
				J	-7.2	-1.8	2.8	1.4	4.1	1.5
336	1	2	SX(RS)	I	4.6	1.2	0.2	4.4	0.3	2.7
				J	4.6	1.2	0.2	4.4	0.2	3.0
			SY(RS)	I	4.9	2.6	5.3	0.9	0.6	7.0
				J	4.9	2.6	5.3	0.9	3.0	5.8
			RC ENV~1 Max	I	0.9	1.8	8.3	6.4	11.3	8.7
				J	0.9	2.6	16.1	6.4	5.3	7.7
			Min	I	-10.0	-3.4	-2.2	-2.4	4.3	-5.3
				J	-10.0	-2.6	1.5	-2.4	-0.8	-3.8

			RC ENV~2 Max	I	-2.7	-0.6	5.4	4.5	8.2	3.2
				J	-2.7	0.0	11.6	4.5	3.6	3.8
			Min	I	-7.2	-1.8	2.8	1.4	4.1	1.5
				J	-7.2	-0.2	5.9	1.4	1.7	1.7
337	1	2	SX(RS)	I	4.6	1.5	0.2	4.4	0.2	3.0
				J	4.6	1.5	0.2	4.4	0.1	2.8
			SY(RS)	I	5.2	2.9	5.3	0.9	3.0	5.8
				J	5.2	2.9	5.3	0.9	5.9	4.3
			RC ENV~1 Max	I	1.2	2.9	16.1	6.4	5.3	7.7
				J	1.2	3.7	24.7	6.4	3.4	6.0
			Min	I	-10.0	-2.9	1.5	-2.4	-0.8	-3.8
				J	-10.0	-2.1	5.2	-2.4	-8.3	-2.6
			RC ENV~2 Max	I	-2.7	0.0	11.6	4.5	3.6	3.8
				J	-2.7	1.4	17.8	4.5	-2.4	3.4
			Min	I	-7.2	-0.2	5.9	1.4	1.7	1.7
				J	-7.2	0.6	9.1	1.4	-4.4	1.6
338	1	2	SX(RS)	I	4.6	2.7	0.2	4.4	0.1	2.8
				J	4.6	2.7	0.2	4.4	0.1	2.4
			SY(RS)	I	5.9	3.3	5.3	0.9	5.9	4.3
				J	5.9	3.3	5.3	0.9	8.7	2.6
			RC ENV~1 Max	I	1.9	4.2	24.7	6.4	3.4	6.0
				J	1.9	5.0	33.3	6.4	-0.5	3.6
			Min	I	-10.0	-2.5	5.2	-2.4	-8.3	-2.6
				J	-10.0	-1.7	9.0	-2.4	-21.9	-1.6
			RC ENV~2 Max	I	-2.7	1.4	17.8	4.5	-2.4	3.4
				J	-2.7	3.0	24.1	4.5	-8.2	2.2
			Min	I	-7.2	0.6	9.1	1.4	-4.4	1.6
				J	-7.2	1.2	12.3	1.4	-15.8	1.0
339	1	2	SX(RS)	I	4.6	3.8	0.0	0.0	0.1	4.6
				J	4.6	3.8	0.0	0.0	0.1	6.5
			SY(RS)	I	3.1	1.4	3.8	2.0	5.1	2.1
				J	3.1	1.4	3.8	2.0	3.1	1.4
			RC ENV~1 Max	I	0.8	1.8	-5.6	2.0	2.6	6.9
				J	0.8	2.6	-1.9	2.0	4.6	9.7
			Min	I	-8.9	-5.9	-21.4	-1.9	-7.7	-2.2
				J	-8.9	-5.1	-12.8	-1.9	-1.5	-3.2
			RC ENV~2 Max	I	-2.1	-1.6	-7.9	0.1	-2.1	4.9
				J	-2.1	-0.9	-4.7	0.1	2.6	6.6
			Min	I	-6.5	-4.0	-15.5	0.0	-4.2	2.1
				J	-6.5	-2.4	-9.3	0.0	1.3	2.7
340	1	2	SX(RS)	I	4.6	1.9	0.0	0.0	0.1	6.5
				J	4.6	1.9	0.0	0.0	0.0	7.5
			SY(RS)	I	1.6	1.6	3.8	2.0	3.1	1.4
				J	1.6	1.6	3.8	2.0	1.0	0.5
			RC ENV~1 Max	I	0.8	0.7	-1.9	2.0	4.6	9.7
				J	0.8	1.5	1.9	2.0	8.2	11.2
			Min	I	-8.9	-3.4	-12.8	-1.9	-1.5	-3.2
				J	-8.9	-2.3	-5.7	-1.9	2.6	-3.8
			RC ENV~2 Max	I	-2.1	-0.9	-4.7	0.1	2.6	6.6
				J	-2.1	-0.3	-1.5	0.1	5.9	7.5
			Min	I	-6.5	-2.4	-9.3	0.0	1.3	2.7
				J	-6.5	-0.8	-3.1	0.0	3.0	3.1
341	1	2	SX(RS)	I	4.6	0.0	0.0	0.0	0.0	7.5
				J	4.6	0.0	0.0	0.0	0.0	7.5
			SY(RS)	I	0.0	1.7	3.8	2.0	1.0	0.5
				J	0.0	1.7	3.8	2.0	1.0	0.5
			RC ENV~1 Max	I	0.8	1.3	1.9	2.0	8.2	11.2
				J	0.8	2.1	5.6	2.0	8.1	11.2
			Min	I	-8.9	-2.1	-5.7	-1.9	2.6	-3.8
				J	-8.9	-1.3	-2.0	-1.9	2.6	-3.8

			RC ENV~2 Max	I	-2.1	-0.3	-1.5	0.1	5.9	7.5
				J	-2.1	0.8	3.2	0.1	5.9	7.5
			Min	I	-6.5	-0.8	-3.1	0.0	3.0	3.1
				J	-6.5	0.3	1.6	0.0	3.0	3.1
342	1	2	SX(RS)	I	4.6	1.9	0.0	0.0	0.0	7.5
				J	4.6	1.9	0.0	0.0	0.0	6.5
			SY(RS)	I	1.6	1.6	3.8	2.0	1.0	0.5
				J	1.6	1.6	3.8	2.0	3.1	1.4
			RC ENV~1 Max	I	0.8	2.3	5.6	2.0	8.1	11.2
				J	0.8	3.4	13.0	2.0	4.7	9.7
			Min	I	-8.9	-1.5	-2.0	-1.9	2.6	-3.8
				J	-8.9	-0.7	1.8	-1.9	-1.4	-3.2
			RC ENV~2 Max	I	-2.1	0.8	3.2	0.1	5.9	7.5
				J	-2.1	2.4	9.4	0.1	2.5	6.6
			Min	I	-6.5	0.3	1.6	0.0	3.0	3.1
				J	-6.5	1.0	4.8	0.0	1.3	2.7
343	1	2	SX(RS)	I	4.6	3.8	0.0	0.0	0.0	6.5
				J	4.6	3.8	0.0	0.0	0.0	4.6
			SY(RS)	I	3.1	1.4	3.8	2.0	3.1	1.4
				J	3.1	1.4	3.8	2.0	5.1	2.1
			RC ENV~1 Max	I	0.8	5.0	13.0	2.0	4.7	9.7
				J	0.8	5.9	21.6	2.0	2.7	6.9
			Min	I	-8.9	-2.6	1.8	-1.9	-1.4	-3.2
				J	-8.9	-1.8	5.5	-1.9	-7.5	-2.2
			RC ENV~2 Max	I	-2.1	2.4	9.4	0.1	2.5	6.6
				J	-2.1	4.1	15.6	0.1	-2.2	4.8
			Min	I	-6.5	1.0	4.8	0.0	1.3	2.7
				J	-6.5	1.6	8.0	0.0	-4.3	2.0
344	1	2	SX(RS)	I	4.6	5.6	0.0	0.0	0.0	4.6
				J	4.6	5.6	0.0	0.0	0.0	2.4
			SY(RS)	I	4.7	1.0	3.8	2.0	5.1	2.1
				J	4.7	1.0	3.8	2.0	7.2	2.6
			RC ENV~1 Max	I	0.8	7.7	21.6	2.0	2.7	6.9
				J	0.8	8.5	30.2	2.0	-1.3	3.7
			Min	I	-8.9	-3.6	5.5	-1.9	-7.5	-2.2
				J	-8.9	-2.8	9.3	-1.9	-20.0	-1.6
			RC ENV~2 Max	I	-2.1	4.1	15.6	0.1	-2.2	4.8
				J	-2.1	5.7	21.9	0.1	-7.4	2.2
			Min	I	-6.5	1.6	8.0	0.0	-4.3	2.0
				J	-6.5	2.2	11.2	0.0	-14.5	1.0
345	1	2	SX(RS)	I	4.6	1.5	0.2	4.4	0.2	2.8
				J	4.6	1.5	0.2	4.4	0.2	3.0
			SY(RS)	I	5.2	2.9	5.3	0.9	5.9	4.3
				J	5.2	2.9	5.3	0.9	3.0	5.8
			RC ENV~1 Max	I	1.1	2.1	-5.2	2.4	3.5	6.0
				J	1.1	2.9	-1.4	2.4	5.3	7.8
			Min	I	-9.7	-3.8	-24.6	-6.4	-8.2	-2.6
				J	-9.7	-3.0	-16.0	-6.4	-0.7	-3.8
			RC ENV~2 Max	I	-2.5	-0.7	-9.1	-1.3	-2.3	3.4
				J	-2.5	0.1	-5.9	-1.3	3.6	3.8
			Min	I	-7.1	-1.5	-17.8	-4.3	-4.4	1.5
				J	-7.1	-0.1	-11.6	-4.3	1.7	1.8
346	1	2	SX(RS)	I	4.6	1.2	0.2	4.4	0.2	3.0
				J	4.6	1.2	0.2	4.4	0.3	2.7
			SY(RS)	I	4.9	2.6	5.3	0.9	3.0	5.8
				J	4.9	2.6	5.3	0.9	0.6	7.0
			RC ENV~1 Max	I	0.8	2.5	-1.4	2.4	5.3	7.8
				J	0.8	3.4	2.3	2.4	11.2	8.8
			Min	I	-9.7	-2.6	-16.0	-6.4	-0.7	-3.8

				J	-9.7	-1.8	-8.2	-6.4	4.3	-5.2
			RC ENV~2 Max	I	-2.5	0.1	-5.9	-1.3	3.6	3.8
				J	-2.5	1.7	-2.7	-1.3	8.1	3.3
			Min	I	-7.1	-0.1	-11.6	-4.3	1.7	1.8
				J	-7.1	0.5	-5.3	-4.3	4.1	1.7
347	1	2	SX(RS)	I	4.6	2.1	0.2	4.4	0.3	2.7
				J	4.6	2.1	0.2	4.4	0.4	2.1
			SY(RS)	I	5.1	2.4	5.3	0.9	0.6	7.0
				J	5.1	2.4	5.3	0.9	2.8	8.0
			RC ENV~1 Max	I	1.0	3.2	2.3	2.4	11.2	8.8
				J	1.0	4.7	6.1	2.4	12.9	9.2
			Min	I	-9.7	-1.6	-8.2	-6.4	4.3	-5.2
				J	-9.7	-0.8	-4.5	-6.4	2.7	-6.9
			RC ENV~2 Max	I	-2.5	1.7	-2.7	-1.3	8.1	3.3
				J	-2.5	3.3	0.9	-1.3	9.3	2.0
			Min	I	-7.1	0.5	-5.3	-4.3	4.1	1.7
				J	-7.1	1.2	0.3	-4.3	4.7	1.1
348	1	2	SX(RS)	I	4.6	3.1	0.2	4.4	0.4	2.1
				J	4.6	3.1	0.2	4.4	0.5	1.9
			SY(RS)	I	5.8	2.4	5.3	0.9	2.8	8.0
				J	5.8	2.4	5.3	0.9	5.7	8.9
			RC ENV~1 Max	I	1.6	4.7	6.1	2.4	12.9	9.2
				J	1.6	6.9	9.8	2.4	10.0	9.0
			Min	I	-9.9	-1.5	-4.5	-6.4	2.7	-6.9
				J	-9.9	-0.7	-0.7	-6.4	-1.6	-8.9
			RC ENV~2 Max	I	-2.5	3.3	0.9	-1.3	9.3	2.0
				J	-2.5	4.9	7.1	-1.3	7.2	0.4
			Min	I	-7.1	1.2	0.3	-4.3	4.7	1.1
				J	-7.1	1.8	3.6	-4.3	3.6	-0.3
349	1	2	SX(RS)	I	4.6	4.1	0.2	4.4	0.5	1.9
				J	4.6	4.1	0.2	4.4	0.6	3.3
			SY(RS)	I	6.7	2.5	5.3	0.9	5.7	8.9
				J	6.7	2.5	5.3	0.9	8.5	9.8
			RC ENV~1 Max	I	2.6	6.9	9.8	2.4	10.0	9.0
				J	2.6	9.2	18.4	2.4	9.1	8.3
			Min	I	-10.8	-1.7	-0.7	-6.4	-1.6	-8.9
				J	-10.8	-0.9	3.0	-6.4	-8.0	-11.2
			RC ENV~2 Max	I	-2.5	4.9	7.1	-1.3	7.2	0.4
				J	-2.5	6.6	13.4	-1.3	1.6	-0.7
			Min	I	-7.1	1.8	3.6	-4.3	3.6	-0.3
				J	-7.1	2.4	6.8	-4.3	0.6	-3.4
350	1	2	SX(RS)	I	4.6	5.0	0.2	4.4	0.6	3.3
				J	4.6	5.0	0.2	4.4	0.7	5.7
			SY(RS)	I	7.8	2.5	5.3	0.9	8.5	9.8
				J	7.8	2.5	5.3	0.9	11.4	10.7
			RC ENV~1 Max	I	3.7	9.2	18.4	2.4	9.1	8.3
				J	3.7	11.5	27.0	2.4	6.5	7.2
			Min	I	-11.9	-1.8	3.0	-6.4	-8.0	-11.2
				J	-11.9	-0.9	6.7	-6.4	-16.3	-14.1
			RC ENV~2 Max	I	-2.5	6.6	13.4	-1.3	1.6	-0.7
				J	-2.5	8.2	19.6	-1.3	-3.8	-2.2
			Min	I	-7.1	2.4	6.8	-4.3	0.6	-3.4
				J	-7.1	3.1	10.0	-4.3	-7.3	-7.4
681	1	2	SX(RS)	I	0.0	15.8	0.0	9.9	0.0	30.1
				J	0.0	15.8	0.0	9.9	0.0	21.7
			SY(RS)	I	15.7	0.0	11.1	0.0	24.3	0.0
				J	15.7	0.0	11.1	0.0	18.3	0.0
			RC ENV~1 Max	I	15.1	15.8	-8.4	9.9	17.4	30.1
				J	15.1	15.8	-2.2	9.9	20.3	21.7

			Min	I	-16.3	-15.8	-46.5	-9.8	-31.3	-30.2
				J	-16.3	-15.8	-31.6	-9.8	-16.3	-21.8
		RC ENV~2	Max	I	-0.4	3.2	-18.5	1.8	-6.5	4.3
				J	-0.4	2.7	-12.5	1.8	3.4	2.7
			Min	I	-0.7	-3.2	-33.6	-1.6	-11.9	-4.7
				J	-0.7	-2.7	-22.9	-1.6	1.9	-3.1
682	1	2	SX(RS)	I	0.0	11.1	0.0	0.0	0.0	14.2
				J	0.0	11.1	0.0	0.0	0.0	20.3
			SY(RS)	I	8.6	0.0	6.9	0.0	13.1	0.0
				J	8.6	0.0	6.9	0.0	9.3	0.0
		RC ENV~1	Max	I	8.2	11.1	-15.3	0.1	-2.0	14.1
				J	8.2	11.1	-9.0	0.1	4.6	20.2
			Min	I	-9.0	-11.2	-52.2	0.0	-35.0	-14.3
				J	-9.0	-11.2	-37.3	0.0	-14.1	-20.4
		RC ENV~2	Max	I	0.2	1.6	-20.9	0.1	-14.2	1.2
				J	0.2	1.1	-15.0	0.1	-4.4	2.0
			Min	I	-0.4	-1.7	-37.8	0.0	-25.4	-1.6
				J	-0.4	-1.3	-27.0	0.0	-7.8	-2.3
683	1	2	SX(RS)	I	0.0	6.1	0.0	9.9	0.0	14.2
				J	0.0	6.1	0.0	9.9	0.0	11.1
			SY(RS)	I	2.4	0.0	11.1	0.0	18.0	0.0
				J	2.4	0.0	11.1	0.0	11.9	0.0
		RC ENV~1	Max	I	1.6	6.0	-13.0	9.9	2.4	14.3
				J	1.6	6.0	-6.7	9.9	7.8	11.2
			Min	I	-3.2	-6.1	-57.5	-9.9	-37.4	-14.2
				J	-3.2	-6.1	-42.7	-9.9	-16.1	-11.1
		RC ENV~2	Max	I	-0.4	0.0	-23.0	1.8	-15.0	1.5
				J	-0.4	0.3	-17.0	1.8	-4.1	1.4
			Min	I	-0.9	-0.2	-41.6	-1.6	-27.0	-1.3
				J	-0.9	-0.4	-30.8	-1.6	-7.3	-1.2
684	1	2	SX(RS)	I	0.0	15.0	0.0	9.9	0.0	21.7
				J	0.0	15.0	0.0	9.9	0.0	13.7
			SY(RS)	I	12.9	0.0	11.1	0.0	18.3	0.0
				J	12.9	0.0	11.1	0.0	12.3	0.0
		RC ENV~1	Max	I	12.3	15.0	-2.2	9.9	20.3	21.7
				J	12.3	15.0	4.1	9.9	19.7	13.7
			Min	I	-13.5	-15.0	-31.6	-9.8	-16.3	-21.8
				J	-13.5	-15.0	-18.2	-9.8	-4.8	-13.8
		RC ENV~2	Max	I	-0.4	2.7	-12.5	1.8	3.4	2.7
				J	-0.4	2.3	-6.6	1.8	12.9	1.4
			Min	I	-0.7	-2.7	-22.9	-1.6	1.9	-3.1
				J	-0.7	-2.3	-12.1	-1.6	7.1	-1.8
685	1	2	SX(RS)	I	0.0	14.0	0.0	9.9	0.0	13.7
				J	0.0	14.0	0.0	9.9	0.0	6.4
			SY(RS)	I	10.0	0.0	11.1	0.0	12.3	0.0
				J	10.0	0.0	11.1	0.0	6.2	0.0
		RC ENV~1	Max	I	9.4	14.0	4.1	9.9	19.7	13.7
				J	9.4	14.0	10.4	9.9	22.9	6.3
			Min	I	-10.7	-13.9	-18.2	-9.8	-4.8	-13.8
				J	-10.7	-13.9	-11.9	-9.8	3.4	-6.5
		RC ENV~2	Max	I	-0.4	2.3	-6.6	1.8	12.9	1.4
				J	-0.4	1.8	-0.6	1.8	16.6	0.3
			Min	I	-0.7	-2.3	-12.1	-1.6	7.1	-1.8
				J	-0.7	-1.8	-1.3	-1.6	9.1	-0.7
686	1	2	SX(RS)	I	0.0	12.6	0.0	9.9	0.0	6.4
				J	0.0	12.6	0.0	9.9	0.0	1.9
			SY(RS)	I	7.2	0.0	11.1	0.0	6.2	0.0
				J	7.2	0.0	11.1	0.0	0.2	0.0
		RC ENV~1	Max	I	6.6	12.6	10.4	9.9	22.9	6.3

				J	6.6	12.6	16.6	9.9	19.9	1.9
			Min	I	-7.9	-12.6	-11.9	-9.8	3.4	-6.5
				J	-7.9	-12.6	-5.6	-9.8	8.1	-2.0
		RC ENV~2	Max	I	-0.4	1.8	-0.6	1.8	16.6	0.3
				J	-0.4	1.3	9.4	1.8	14.4	0.2
			Min	I	-0.7	-1.8	-1.3	-1.6	9.1	-0.7
				J	-0.7	-1.3	5.3	-1.6	7.8	-0.6
687	1	2	SX(RS)	I	0.0	10.8	0.0	9.9	0.0	1.9
				J	0.0	10.8	0.0	9.9	0.0	6.7
			SY(RS)	I	4.5	0.0	11.1	0.0	0.2	0.0
				J	4.5	0.0	11.1	0.0	5.9	0.0
		RC ENV~1	Max	I	3.9	10.8	16.6	9.9	19.9	1.9
				J	3.9	10.8	27.9	9.9	9.5	6.6
			Min	I	-5.1	-10.8	-5.6	-9.8	8.1	-2.0
				J	-5.1	-10.8	0.6	-9.8	-2.3	-6.8
		RC ENV~2	Max	I	-0.4	1.3	9.4	1.8	14.4	0.2
				J	-0.4	0.8	20.2	1.8	6.3	0.8
			Min	I	-0.7	-1.3	5.3	-1.6	7.8	-0.6
				J	-0.7	-0.9	11.2	-1.6	3.4	-1.2
688	1	2	SX(RS)	I	0.0	8.6	0.0	9.9	0.0	6.7
				J	0.0	8.6	0.0	9.9	0.0	11.1
			SY(RS)	I	2.2	0.0	11.1	0.0	5.9	0.0
				J	2.2	0.0	11.1	0.0	11.9	0.0
		RC ENV~1	Max	I	1.6	8.6	27.9	9.9	9.5	6.6
				J	1.6	8.6	42.8	9.9	7.5	11.1
			Min	I	-2.8	-8.6	0.6	-9.8	-2.3	-6.8
				J	-2.8	-8.6	6.9	-9.8	-16.4	-11.2
		RC ENV~2	Max	I	-0.4	0.8	20.2	1.8	6.3	0.8
				J	-0.4	0.4	30.9	1.8	-4.3	1.1
			Min	I	-0.7	-0.9	11.2	-1.6	3.4	-1.2
				J	-0.7	-0.4	17.2	-1.6	-7.5	-1.5
689	1	2	SX(RS)	I	0.0	6.0	0.0	9.9	0.0	11.1
				J	0.0	6.0	0.0	9.9	0.0	14.3
			SY(RS)	I	2.4	0.0	11.1	0.0	11.9	0.0
				J	2.4	0.0	11.1	0.0	18.0	0.0
		RC ENV~1	Max	I	1.8	6.1	42.8	9.9	7.5	11.1
				J	1.8	6.1	57.7	9.9	2.0	14.1
			Min	I	-3.0	-6.0	6.9	-9.8	-16.4	-11.2
				J	-3.0	-6.0	13.2	-9.8	-37.7	-14.4
		RC ENV~2	Max	I	-0.4	0.4	30.9	1.8	-4.3	1.1
				J	-0.4	0.1	41.7	1.8	-15.3	1.2
			Min	I	-0.7	-0.4	17.2	-1.6	-7.5	-1.5
				J	-0.7	-0.1	23.1	-1.6	-27.2	-1.6
690	1	2	SX(RS)	I	0.0	7.6	0.0	0.0	0.0	20.3
				J	0.0	7.6	0.0	0.0	0.0	24.4
			SY(RS)	I	5.7	0.0	6.9	0.0	9.3	0.0
				J	5.7	0.0	6.9	0.0	5.6	0.0
		RC ENV~1	Max	I	5.4	7.6	-9.0	0.1	4.6	20.2
				J	5.4	7.6	-2.7	0.1	7.8	24.4
			Min	I	-6.1	-7.7	-37.3	0.0	-14.1	-20.4
				J	-6.1	-7.7	-22.5	0.0	-3.4	-24.5
		RC ENV~2	Max	I	0.2	1.1	-15.0	0.1	-4.4	2.0
				J	0.2	0.6	-9.0	0.1	4.0	2.5
			Min	I	-0.4	-1.3	-27.0	0.0	-7.8	-2.3
				J	-0.4	-0.8	-16.3	0.0	2.1	-2.8
691	1	2	SX(RS)	I	0.0	3.9	0.0	0.0	0.0	24.4
				J	0.0	3.9	0.0	0.0	0.0	26.5
			SY(RS)	I	2.9	0.0	6.9	0.0	5.6	0.0
				J	2.9	0.0	6.9	0.0	1.9	0.0

			RC ENV~1 Max	I	2.5	3.9	-2.7	0.1	7.8	24.4
				J	2.5	3.9	3.5	0.1	13.7	26.5
			Min	I	-3.3	-3.9	-22.5	0.0	-3.4	-24.5
				J	-3.3	-3.9	-10.2	0.0	3.9	-26.6
			RC ENV~2 Max	I	0.2	0.6	-9.0	0.1	4.0	2.5
				J	0.2	0.2	-3.1	0.1	9.9	2.8
			Min	I	-0.4	-0.8	-16.3	0.0	2.1	-2.8
				J	-0.4	-0.3	-5.5	0.0	5.4	-3.0
692	1	2	SX(RS)	I	0.0	0.0	0.0	0.0	0.0	26.5
				J	0.0	0.0	0.0	0.0	0.0	26.5
			SY(RS)	I	0.0	0.0	6.9	0.0	1.9	0.0
				J	0.0	0.0	6.9	0.0	1.9	0.0
			RC ENV~1 Max	I	0.4	0.2	3.5	0.1	13.7	26.5
				J	0.4	0.2	9.8	0.1	13.8	26.5
			Min	I	-0.4	-0.5	-10.2	0.0	3.9	-26.6
				J	-0.4	-0.5	-4.0	0.0	4.0	-26.6
			RC ENV~2 Max	I	0.2	0.2	-3.1	0.1	9.9	2.8
				J	0.2	0.2	5.2	0.1	10.0	2.9
			Min	I	-0.4	-0.3	-5.5	0.0	5.4	-3.0
				J	-0.4	-0.3	2.8	0.0	5.5	-3.0
693	1	2	SX(RS)	I	0.0	3.9	0.0	0.0	0.0	26.5
				J	0.0	3.9	0.0	0.0	0.0	24.4
			SY(RS)	I	2.9	0.0	6.9	0.0	1.9	0.0
				J	2.9	0.0	6.9	0.0	5.6	0.0
			RC ENV~1 Max	I	2.5	3.9	9.8	0.1	13.8	26.5
				J	2.5	3.9	22.2	0.1	8.2	24.4
			Min	I	-3.3	-3.9	-4.0	0.0	4.0	-26.6
				J	-3.3	-3.9	2.3	0.0	-3.0	-24.4
			RC ENV~2 Max	I	0.2	0.2	5.2	0.1	10.0	2.9
				J	0.2	0.6	16.0	0.1	4.2	2.7
			Min	I	-0.4	-0.3	2.8	0.0	5.5	-3.0
				J	-0.4	-0.8	8.8	0.0	2.3	-2.7
694	1	2	SX(RS)	I	0.0	7.6	0.0	0.0	0.0	24.4
				J	0.0	7.6	0.0	0.0	0.0	20.3
			SY(RS)	I	5.7	0.0	6.9	0.0	5.6	0.0
				J	5.7	0.0	6.9	0.0	9.3	0.0
			RC ENV~1 Max	I	5.4	7.6	22.2	0.1	8.2	24.4
				J	5.4	7.6	37.1	0.1	5.2	20.3
			Min	I	-6.1	-7.7	2.3	0.0	-3.0	-24.4
				J	-6.1	-7.7	8.6	0.0	-13.5	-20.3
			RC ENV~2 Max	I	0.2	0.6	16.0	0.1	4.2	2.7
				J	0.2	1.1	26.8	0.1	-4.1	2.2
			Min	I	-0.4	-0.8	8.8	0.0	2.3	-2.7
				J	-0.4	-1.3	14.7	0.0	-7.4	-2.1
695	1	2	SX(RS)	I	0.0	11.1	0.0	0.0	0.0	20.3
				J	0.0	11.1	0.0	0.0	0.0	14.2
			SY(RS)	I	8.6	0.0	6.9	0.0	9.3	0.0
				J	8.6	0.0	6.9	0.0	13.1	0.0
			RC ENV~1 Max	I	8.2	11.1	37.1	0.1	5.2	20.3
				J	8.2	11.1	52.0	0.1	-1.1	14.3
			Min	I	-9.0	-11.2	8.6	0.0	-13.5	-20.3
				J	-9.0	-11.2	14.8	0.0	-34.5	-14.2
			RC ENV~2 Max	I	0.2	1.1	26.8	0.1	-4.1	2.2
				J	0.2	1.6	37.5	0.1	-13.7	1.5
			Min	I	-0.4	-1.3	14.7	0.0	-7.4	-2.1
				J	-0.4	-1.7	20.7	0.0	-24.9	-1.3
696	1	2	SX(RS)	I	0.0	8.6	0.0	9.9	0.0	11.1
				J	0.0	8.6	0.0	9.9	0.0	6.7
			SY(RS)	I	2.2	0.0	11.1	0.0	11.9	0.0
				J	2.2	0.0	11.1	0.0	5.9	0.0

			RC ENV~1 Max	I	1.4	8.6	-6.7	9.9	7.8	11.2
				J	1.4	8.6	-0.4	9.9	9.7	6.7
			Min	I	-3.0	-8.6	-42.7	-9.9	-16.1	-11.1
				J	-3.0	-8.6	-27.8	-9.9	-2.0	-6.6
			RC ENV~2 Max	I	-0.4	0.3	-17.0	1.8	-4.1	1.4
				J	-0.4	0.8	-11.1	1.8	6.5	1.1
			Min	I	-0.9	-0.4	-30.8	-1.6	-7.3	-1.2
				J	-0.9	-0.9	-20.0	-1.6	3.5	-0.8
697	1	2	SX(RS)	I	0.0	10.8	0.0	9.9	0.0	6.7
				J	0.0	10.8	0.0	9.9	0.0	1.9
			SY(RS)	I	4.5	0.0	11.1	0.0	5.9	0.0
				J	4.5	0.0	11.1	0.0	0.2	0.0
			RC ENV~1 Max	I	3.7	10.8	-0.4	9.9	9.7	6.7
				J	3.7	10.8	5.8	9.9	20.0	2.0
			Min	I	-5.3	-10.8	-27.8	-9.9	-2.0	-6.6
				J	-5.3	-10.8	-16.4	-9.9	8.2	-1.8
			RC ENV~2 Max	I	-0.4	0.8	-11.1	1.8	6.5	1.1
				J	-0.4	1.3	-5.2	1.8	14.4	0.6
			Min	I	-0.9	-0.9	-20.0	-1.6	3.5	-0.8
				J	-0.9	-1.4	-9.3	-1.6	7.9	-0.2
698	1	2	SX(RS)	I	0.0	12.6	0.0	9.9	0.0	1.9
				J	0.0	12.6	0.0	9.9	0.0	6.4
			SY(RS)	I	7.2	0.0	11.1	0.0	0.2	0.0
				J	7.2	0.0	11.1	0.0	6.2	0.0
			RC ENV~1 Max	I	6.4	12.5	5.8	9.9	20.0	2.0
				J	6.4	12.5	12.1	9.9	22.9	6.5
			Min	I	-8.1	-12.6	-16.4	-9.9	8.2	-1.8
				J	-8.1	-12.6	-10.2	-9.9	3.4	-6.3
			RC ENV~2 Max	I	-0.4	1.3	-5.2	1.8	14.4	0.6
				J	-0.4	1.7	1.5	1.8	16.6	0.7
			Min	I	-0.9	-1.4	-9.3	-1.6	7.9	-0.2
				J	-0.9	-1.9	0.7	-1.6	9.1	-0.2
699	1	2	SX(RS)	I	0.0	14.0	0.0	9.9	0.0	6.4
				J	0.0	14.0	0.0	9.9	0.0	13.7
			SY(RS)	I	10.0	0.0	11.1	0.0	6.2	0.0
				J	10.0	0.0	11.1	0.0	12.3	0.0
			RC ENV~1 Max	I	9.2	13.9	12.1	9.9	22.9	6.5
				J	9.2	13.9	18.4	9.9	19.6	13.8
			Min	I	-10.9	-14.0	-10.2	-9.9	3.4	-6.3
				J	-10.9	-14.0	-3.9	-9.9	-4.9	-13.6
			RC ENV~2 Max	I	-0.4	1.7	1.5	1.8	16.6	0.7
				J	-0.4	2.2	12.2	1.8	12.8	1.8
			Min	I	-0.9	-1.9	0.7	-1.6	9.1	-0.2
				J	-0.9	-2.3	6.7	-1.6	7.0	-1.3
700	1	2	SX(RS)	I	0.0	15.0	0.0	9.9	0.0	13.7
				J	0.0	15.0	0.0	9.9	0.0	21.7
			SY(RS)	I	12.9	0.0	11.1	0.0	12.3	0.0
				J	12.9	0.0	11.1	0.0	18.3	0.0
			RC ENV~1 Max	I	12.0	15.0	18.4	9.9	19.6	13.8
				J	12.0	15.0	31.8	9.9	20.0	21.8
			Min	I	-13.7	-15.0	-3.9	-9.9	-4.9	-13.6
				J	-13.7	-15.0	2.4	-9.9	-16.6	-21.6
			RC ENV~2 Max	I	-0.4	2.2	12.2	1.8	12.8	1.8
				J	-0.4	2.7	23.0	1.8	3.3	3.2
			Min	I	-0.9	-2.3	6.7	-1.6	7.0	-1.3
				J	-0.9	-2.8	12.7	-1.6	1.7	-2.6
701	1	2	SX(RS)	I	0.0	15.8	0.0	9.9	0.0	21.7
				J	0.0	15.8	0.0	9.9	0.0	30.1
			SY(RS)	I	15.7	0.0	11.1	0.0	18.3	0.0

		J	15.7	0.0	11.1	0.0	24.3	0.0
RC ENV~1	Max	I	14.9	15.8	31.8	9.9	20.0	21.8
		J	14.9	15.8	46.6	9.9	17.0	30.3
	Min	I	-16.6	-15.9	2.4	-9.9	-16.6	-21.6
		J	-16.6	-15.9	8.6	-9.9	-31.6	-30.0
RC ENV~2	Max	I	-0.4	2.7	23.0	1.8	3.3	3.2
		J	-0.4	3.1	33.7	1.8	-6.7	4.9
	Min	I	-0.9	-2.8	12.7	-1.6	1.7	-2.6
		J	-0.9	-3.3	18.6	-1.6	-12.1	-4.2

BEAM ELEMENT FORCES & MOMENTS MIN/MAX SUMMARY BY PROPERTY PRINTOUT Unit System : kN , m

* LENGTH : the length between two nodes

[SECTION NAME : Pilastri 30x30 , SECTION ID : 1 , SECTION SHAPE : SB]
[SECTION SIZE] H:0.3 B:0.3
** MAX

ELEM	COM	LC		PT	AXIAL	SHEAR-y	SHEAR-z	TORSION	MOMENT-y	MOMENT-z	LENGTH
258	AXL	SY(RS)	1	J	11.8	11.7	0.0	0.0	0.0	29.6	0.50
266	SHY	RC ENV~1	1	I	-54.2	15.7	10.9	0.0	30.8	27.8	0.50
245	SHZ	RC ENV~1	1	J	-35.2	11.7	15.8	0.0	16.0	18.9	0.50
274	TOR	SX(RS)	1	I	0.0	0.0	10.9	0.0	31.0	0.0	0.50
220	MTY	RC ENV~1	1	J	-32.8	11.8	6.3	0.0	39.6	19.4	0.50
274	MTZ	RC ENV~1	1	J	-54.7	15.0	10.9	0.0	36.5	36.2	0.50

** MIN

ELEM	COM	LC		PT	AXIAL	SHEAR-y	SHEAR-z	TORSION	MOMENT-y	MOMENT-z	LENGTH
266	AXL	RC ENV~1	1	J	-133.6	-15.2	-10.8	-0.0	-36.7	-35.6	0.50
274	SHY	RC ENV~1	1	I	-131.7	-15.9	-10.9	-0.0	-31.0	-27.4	0.50
220	SHZ	RC ENV~1	1	J	-74.8	-12.1	-19.9	-0.0	-15.8	-18.2	0.50
274	TOR	RC ENV~1	1	I	-131.7	-15.9	-10.9	-0.0	-31.0	-27.4	0.50
245	MTY	RC ENV~1	1	J	-82.7	-12.2	-6.4	-0.0	-39.1	-18.6	0.50
266	MTZ	RC ENV~1	1	J	-133.6	-15.2	-10.8	-0.0	-36.7	-35.6	0.50

[SECTION NAME : Cordolo , SECTION ID : 2 , SECTION SHAPE : SB]
[SECTION SIZE] H:0.3 B:0.3
** MAX

ELEM	COM	LC		PT	AXIAL	SHEAR-y	SHEAR-z	TORSION	MOMENT-y	MOMENT-z	LENGTH
681	AXL	SY(RS)	1	I	15.7	0.0	11.1	0.0	24.3	0.0	0.54
681	SHY	RC ENV~1	1	I	15.1	15.8	-8.4	9.9	17.4	30.1	0.54
689	SHZ	RC ENV~1	1	J	1.8	6.1	57.7	9.9	2.0	14.1	0.54
689	TOR	RC ENV~1	1	J	1.8	6.1	57.7	9.9	2.0	14.1	0.54
681	MTY	SY(RS)	1	I	15.7	0.0	11.1	0.0	24.3	0.0	0.54
701	MTZ	RC ENV~1	1	J	14.9	15.8	46.6	9.9	17.0	30.3	0.54

** MIN

ELEM	COM	LC		PT	AXIAL	SHEAR-y	SHEAR-z	TORSION	MOMENT-y	MOMENT-z	LENGTH
298	AXL	RC ENV~1	1	J	-18.2	-5.7	-0.2	-3.1	-14.8	-15.9	0.54
701	SHY	RC ENV~1	1	I	-16.6	-15.9	2.4	-9.9	-16.6	-21.6	0.54
683	SHZ	RC ENV~1	1	I	-3.2	-6.1	-57.5	-9.9	-37.4	-14.2	0.54
683	TOR	RC ENV~1	1	I	-3.2	-6.1	-57.5	-9.9	-37.4	-14.2	0.54
689	MTY	RC ENV~1	1	J	-3.0	-6.0	13.2	-9.8	-37.7	-14.4	0.54
681	MTZ	RC ENV~1	1	I	-16.3	-15.8	-46.5	-9.8	-31.3	-30.2	0.54

BEAM ELEMENT STRESSES DEFAULT PRINTOUT Unit System : kN , m

ELEM	MAT	SEC	LC		PT	AXIAL	SHEAR-y	SHEAR-z	(+y)-BENDING	-(-y)	(+z)-BENDING	-(-z)
189	1	1	SX(RS)		I	77.6	13.0	176.8	330.5	330.5	2629.2	2629.2
					J	77.6	13.0	176.8	244.1	244.1	1464.7	1464.7
			SY(RS)		I	52.3	129.1	11.7	2262.3	2262.3	242.3	242.3
					J	52.3	129.1	11.7	1418.5	1418.5	164.3	164.3
			RC ENV~1	Max	I	-121.7	81.5	196.2	3547.3	977.4	1931.6	3326.8
					J	-134.2	81.5	196.2	2386.0	451.0	896.4	2033.1
				Min	I	-408.7	-176.7	-157.4	-977.4	-3547.3	-3326.8	-1931.6
					J	-425.0	-176.7	-157.4	-451.0	-2386.0	-2033.1	-896.4
			RC ENV~2	Max	I	-187.7	-32.9	59.4	2273.3	-901.0	-157.4	1581.4
					J	-200.2	-32.9	68.1	1715.0	-681.5	-219.8	1156.2
				Min	I	-298.7	-83.7	-5.0	901.0	-2273.3	-1581.4	157.4
					J	-311.2	-83.7	-13.7	681.5	-1715.0	-1156.2	219.8

190	1	1	SX(RS)	I	2.3	1.0	165.5	15.5	15.5	971.9	971.9
				J	2.3	1.0	165.5	12.0	12.0	295.7	295.7
			SY(RS)	I	19.9	181.5	47.8	3520.4	3520.4	641.3	641.3
				J	19.9	181.5	47.8	2310.4	2310.4	322.8	322.8
			RC ENV~1 Max	I	-289.6	179.0	89.5	3483.9	3556.8	1484.9	528.7
				J	-302.1	179.0	89.5	2257.0	2363.8	259.6	386.1
			Min	I	-733.6	-184.0	-241.4	-3556.8	-3483.9	-528.7	-1484.9
				J	-749.8	-184.0	-241.4	-2363.8	-2257.0	-386.1	-259.6
			RC ENV~2 Max	I	-237.0	0.7	-55.4	14.0	151.6	1049.2	-149.7
				J	-249.5	0.7	-38.0	-13.9	146.8	47.1	161.7
			Min	I	-530.2	-4.2	-149.3	-151.6	-14.0	149.7	-1049.2
				J	-542.7	-4.2	-159.8	-146.8	13.9	-161.7	-47.1
191	1	1	SX(RS)	I	2.4	2.7	165.8	53.1	53.1	974.8	974.8
				J	2.4	2.7	165.8	36.1	36.1	295.1	295.1
			SY(RS)	I	19.9	181.5	47.8	3520.3	3520.3	641.3	641.3
				J	19.9	181.5	47.8	2310.4	2310.4	322.8	322.8
			RC ENV~1 Max	I	-312.2	173.6	90.9	3729.7	3311.0	1470.2	539.0
				J	-324.7	173.6	90.9	2466.8	2154.0	259.4	386.3
			Min	I	-834.6	-189.4	-240.7	-3311.0	-3729.7	-539.0	-1470.2
				J	-850.8	-189.4	-240.7	-2154.0	-2466.8	-386.3	-259.4
			RC ENV~2 Max	I	-303.0	-7.7	-54.7	370.6	-201.7	1038.7	-139.3
				J	-315.5	-7.7	-37.2	280.4	-147.5	41.9	167.0
			Min	I	-596.2	-13.5	-148.6	201.7	-370.6	139.3	-1038.7
				J	-608.7	-13.5	-159.0	147.5	-280.4	-167.0	-41.9
192	1	1	SX(RS)	I	77.7	12.9	177.5	328.4	328.4	2638.9	2638.9
				J	77.7	12.9	177.5	242.4	242.4	1469.6	1469.6
			SY(RS)	I	52.3	129.1	11.7	2262.3	2262.3	242.3	242.3
				J	52.3	129.1	11.7	1418.5	1418.5	164.3	164.3
			RC ENV~1 Max	I	-157.6	186.2	196.2	857.7	3667.0	1953.5	3324.3
				J	-170.1	186.2	196.2	394.7	2471.7	909.0	2030.2
			Min	I	-521.7	-72.0	-158.8	-3667.0	-857.7	-3324.3	-1953.5
				J	-538.0	-72.0	-158.8	-2471.7	-394.7	-2030.2	-909.0
			RC ENV~2 Max	I	-232.4	93.9	52.2	-1038.0	2410.3	-25.8	1449.9
				J	-244.9	93.9	60.9	-750.9	1784.5	-136.3	1072.7
			Min	I	-374.9	43.1	-12.2	-2410.3	1038.0	-1449.9	25.8
				J	-387.4	43.1	-20.9	-1784.5	750.9	-1072.7	136.3
193	1	1	SX(RS)	I	77.6	13.0	176.8	330.5	330.5	2629.2	2629.2
				J	77.6	13.0	176.8	244.1	244.1	1464.7	1464.7
			SY(RS)	I	52.4	129.2	11.7	2263.7	2263.7	242.4	242.4
				J	52.4	129.2	11.7	1419.4	1419.4	164.4	164.4
			RC ENV~1 Max	I	-156.0	76.0	157.4	3618.1	909.3	3306.6	1951.8
				J	-168.5	76.0	157.4	2419.4	419.4	2012.8	916.6
			Min	I	-510.2	-182.3	-196.2	-909.3	-3618.1	-1951.8	-3306.6
				J	-526.4	-182.3	-196.2	-419.4	-2419.4	-916.6	-2012.8
			RC ENV~2 Max	I	-233.3	-41.2	15.6	2221.2	-1070.1	1634.2	14.7
				J	-245.8	-41.2	20.8	1661.3	-795.7	1127.9	-106.5
			Min	I	-366.8	-84.0	-73.3	1070.1	-2221.2	-14.7	-1634.2
				J	-379.3	-84.0	-78.6	795.7	-1661.3	106.5	-1127.9
194	1	1	SX(RS)	I	2.3	1.0	165.5	15.4	15.4	971.9	971.9
				J	2.3	1.0	165.5	12.0	12.0	295.7	295.7
			SY(RS)	I	19.9	181.6	47.8	3521.9	3521.9	641.3	641.3
				J	19.9	181.6	47.8	2311.5	2311.5	322.8	322.8
			RC ENV~1 Max	I	-318.3	184.6	240.4	3405.7	3638.1	528.3	1415.5
				J	-330.8	184.6	240.4	2215.2	2407.8	378.7	267.0
			Min	I	-819.7	-178.6	-90.6	-3638.1	-3405.7	-1415.5	-528.3
				J	-836.0	-178.6	-90.6	-2407.8	-2215.2	-267.0	-378.7
			RC ENV~2 Max	I	-328.9	15.4	144.2	-113.3	357.9	-290.6	973.1
				J	-341.4	15.4	150.5	-93.6	254.9	59.0	-8.7
			Min	I	-587.0	2.9	57.2	-357.9	113.3	-973.1	290.6

				J	-599.5	2.9	46.8	-254.9	93.6	8.7	-59.0
195	1	1	SX(RS)	I	2.4	2.7	165.8	53.3	53.3	974.8	974.8
				J	2.4	2.7	165.8	36.2	36.2	295.1	295.1
			SY(RS)	I	19.9	181.6	47.8	3521.9	3521.9	641.3	641.3
				J	19.9	181.6	47.8	2311.4	2311.4	322.8	322.8
			RC ENV~1 Max	I	-316.3	177.4	241.1	3655.8	3388.1	528.5	1421.1
				J	-328.8	177.4	241.1	2417.5	2205.4	378.4	267.3
			Min	I	-821.4	-185.8	-90.5	-3388.1	-3655.8	-1421.1	-528.5
				J	-837.7	-185.8	-90.5	-2205.4	-2417.5	-267.3	-378.4
			RC ENV~2 Max	I	-326.9	-4.1	146.8	288.9	-130.9	-301.9	984.4
				J	-339.4	-4.1	153.1	222.4	-103.4	62.5	-15.5
			Min	I	-587.6	-10.2	59.9	130.9	-288.9	-984.4	301.9
				J	-600.1	-10.2	49.4	103.4	-222.4	15.5	-62.5
196	1	1	SX(RS)	I	77.7	12.9	177.5	328.4	328.4	2638.9	2638.9
				J	77.7	12.9	177.5	242.4	242.4	1469.6	1469.6
			SY(RS)	I	52.4	129.2	11.7	2263.7	2263.7	242.4	242.4
				J	52.4	129.2	11.7	1419.4	1419.4	164.4	164.4
			RC ENV~1 Max	I	-157.2	184.3	158.1	892.2	3635.1	3334.5	1943.3
				J	-169.7	184.3	158.1	415.5	2423.3	2035.9	903.4
			Min	I	-506.6	-74.0	-196.9	-3635.1	-892.2	-1943.3	-3334.5
				J	-522.8	-74.0	-196.9	-2423.3	-415.5	-903.4	-2035.9
			RC ENV~2 Max	I	-234.6	83.5	22.9	-1052.0	2203.1	1585.4	63.6
				J	-247.1	83.5	28.1	-780.8	1646.4	1127.9	-106.5
			Min	I	-364.8	39.6	-66.0	-2203.1	1052.0	-63.6	-1585.4
				J	-377.3	39.6	-71.2	-1646.4	780.8	106.5	-1127.9
197	1	1	SX(RS)	I	0.0	0.0	84.7	0.0	0.0	2706.8	2706.8
				J	0.0	0.0	84.7	0.0	0.0	2146.3	2146.3
			SY(RS)	I	130.9	163.9	0.0	4479.1	4479.1	0.5	0.5
				J	130.9	163.9	0.0	3386.2	3386.2	0.4	0.4
			RC ENV~1 Max	I	-195.4	126.2	85.5	6011.9	2946.2	2686.4	2727.2
				J	-207.9	126.2	85.5	4667.8	2104.6	2130.9	2161.7
			Min	I	-605.0	-201.6	-84.0	-2946.2	-6011.9	-2727.2	-2686.4
				J	-621.3	-201.6	-84.0	-2104.6	-4667.8	-2161.7	-2130.9
			RC ENV~2 Max	I	-310.8	-34.2	32.9	2694.4	-1407.3	720.8	906.0
				J	-323.3	-34.2	32.9	2250.8	-1179.0	558.4	687.0
			Min	I	-447.5	-66.5	-24.4	1407.3	-2694.4	-906.0	-720.8
				J	-460.0	-66.5	-24.4	1179.0	-2250.8	-687.0	-558.4
198	1	1	SX(RS)	I	0.0	0.0	151.4	0.0	0.0	2196.3	2196.3
				J	0.0	0.0	151.4	0.0	0.0	1187.2	1187.2
			SY(RS)	I	47.4	224.6	0.0	6897.0	6897.0	0.2	0.2
				J	47.4	224.6	0.0	5399.6	5399.6	0.2	0.2
			RC ENV~1 Max	I	-468.9	228.4	152.3	6693.4	7100.5	2192.8	2199.9
				J	-481.4	228.4	152.3	5221.1	5578.2	1189.3	1185.1
			Min	I	-1221.3	-220.9	-150.6	-7100.5	-6693.4	-2199.9	-2192.8
				J	-1237.6	-220.9	-150.6	-5578.2	-5221.1	-1185.1	-1189.3
			RC ENV~2 Max	I	-489.2	9.2	30.4	-201.0	416.5	375.1	380.5
				J	-501.7	9.2	30.4	-176.4	355.1	189.3	177.9
			Min	I	-883.1	3.7	-27.9	-416.5	201.0	-380.5	-375.1
				J	-895.6	3.7	-27.9	-355.1	176.4	-177.9	-189.3
199	1	1	SX(RS)	I	0.0	0.0	151.4	0.0	0.0	2196.2	2196.2
				J	0.0	0.0	151.4	0.0	0.0	1187.0	1187.0
			SY(RS)	I	47.4	224.6	0.0	6897.0	6897.0	0.2	0.2
				J	47.4	224.6	0.0	5399.6	5399.6	0.2	0.2
			RC ENV~1 Max	I	-462.0	217.4	151.3	7189.6	6604.4	2198.5	2193.8
				J	-474.5	217.4	151.3	5643.9	5155.4	1188.6	1185.4
			Min	I	-1216.6	-231.9	-151.5	-6604.4	-7189.6	-2193.8	-2198.5
				J	-1232.9	-231.9	-151.5	-5155.4	-5643.9	-1185.4	-1188.6
			RC ENV~2 Max	I	-484.9	-7.2	28.9	467.8	-290.1	379.7	376.0
				J	-497.4	-7.2	28.9	393.0	-242.1	183.9	183.3

			Min	I	-878.8	-11.2	-29.4	290.1	-467.8	-376.0	-379.7
				J	-891.3	-11.2	-29.4	242.1	-393.0	-183.3	-183.9
200	1	1	SX(RS)	I	0.0	0.0	85.1	0.0	0.0	2722.8	2722.8
				J	0.0	0.0	85.1	0.0	0.0	2159.5	2159.5
			SY(RS)	I	130.9	163.9	0.0	4479.1	4479.1	0.5	0.5
				J	130.9	163.9	0.0	3386.2	3386.2	0.4	0.4
			RC ENV~1 Max	I	-197.4	205.3	85.0	2874.5	6083.7	2726.9	2718.7
				J	-209.9	205.3	85.0	2057.5	4715.0	2162.5	2156.4
			Min	I	-617.7	-122.6	-85.3	-6083.7	-2874.5	-2718.7	-2726.9
				J	-633.9	-122.6	-85.3	-4715.0	-2057.5	-2156.4	-2162.5
			RC ENV~2 Max	I	-321.6	69.2	28.2	-1456.1	2743.2	823.0	803.8
				J	-334.1	69.2	28.2	-1210.0	2281.9	629.8	615.6
			Min	I	-455.6	36.5	-29.0	-2743.2	1456.1	-803.8	-823.0
				J	-468.1	36.5	-29.0	-2281.9	1210.0	-615.6	-629.8
201	1	2	SX(RS)	I	50.8	82.5	3.3	1262.7	1262.7	152.1	152.1
				J	50.8	82.5	3.3	731.4	731.4	128.5	128.5
			SY(RS)	I	86.8	41.8	87.9	2369.4	2369.4	2529.2	2529.2
				J	86.8	41.8	87.9	2173.3	2173.3	1893.9	1893.9
			RC ENV~1 Max	I	46.2	203.1	-109.2	1618.0	3120.8	3542.5	1515.9
				J	46.2	163.8	-46.7	1855.2	2491.3	1706.5	2081.4
			Min	I	-127.4	-15.8	-465.3	-3120.8	-1618.0	-1515.9	-3542.5
				J	-127.4	-29.4	-317.1	-2491.3	-1855.2	-2081.4	-1706.5
			RC ENV~2 Max	I	-19.1	144.3	-150.0	-221.3	1774.6	1668.4	-790.4
				J	-19.1	116.3	-102.5	8.6	831.4	-123.4	379.7
			Min	I	-80.6	36.1	-336.5	-1774.6	221.3	790.4	-1668.4
				J	-80.6	27.4	-229.4	-831.4	-8.6	-379.7	123.4
202	1	2	SX(RS)	I	51.2	93.8	0.5	541.3	541.3	21.1	21.1
				J	51.2	93.8	0.5	1015.8	1015.8	17.5	17.5
			SY(RS)	I	51.8	16.1	62.9	581.4	581.4	1594.2	1594.2
				J	51.8	16.1	62.9	467.7	467.7	1138.7	1138.7
			RC ENV~1 Max	I	9.5	141.4	-161.4	814.8	362.6	4792.4	-466.3
				J	9.5	127.8	-99.0	1663.5	501.4	1801.3	476.2
			Min	I	-111.6	-46.1	-528.0	-362.6	-814.8	466.3	-4792.4
				J	-111.6	-59.7	-379.8	-501.4	-1663.5	-476.2	-1801.3
			RC ENV~2 Max	I	-21.9	97.7	-173.0	571.0	-57.7	3467.1	-1626.9
				J	-21.9	69.7	-125.5	1176.5	-245.4	1091.2	-546.5
			Min	I	-80.1	30.3	-381.8	57.7	-571.0	1626.9	-3467.1
				J	-80.1	21.6	-274.7	245.4	-1176.5	546.5	-1091.2
203	1	2	SX(RS)	I	50.9	45.1	3.9	541.8	541.8	48.5	48.5
				J	50.9	45.1	3.9	621.5	621.5	33.9	33.9
			SY(RS)	I	65.8	55.6	87.9	581.1	581.1	1935.5	1935.5
				J	65.8	55.6	87.9	957.5	957.5	1301.4	1301.4
			RC ENV~1 Max	I	18.2	83.1	-147.5	806.1	356.0	4847.8	-37.1
				J	18.2	69.6	-85.1	1332.5	582.5	1795.7	807.1
			Min	I	-124.2	-28.1	-567.2	-356.0	-806.1	37.1	-4847.8
				J	-124.2	-41.7	-419.0	-582.5	-1332.5	-807.1	-1795.7
			RC ENV~2 Max	I	-27.6	50.2	-178.4	554.8	-41.0	3493.6	-1487.9
				J	-27.6	24.0	-130.9	817.2	-180.8	917.7	-368.5
			Min	I	-89.1	23.7	-409.4	41.0	-554.8	1487.9	-3493.6
				J	-89.1	12.0	-302.3	180.8	-817.2	368.5	-917.7
204	1	2	SX(RS)	I	50.8	82.5	3.3	1262.7	1262.7	152.1	152.1
				J	50.8	82.5	3.3	731.5	731.5	128.4	128.4
			SY(RS)	I	86.8	41.8	88.0	2369.4	2369.4	2530.1	2530.1
				J	86.8	41.8	88.0	2173.3	2173.3	1894.5	1894.5
			RC ENV~1 Max	I	42.0	14.8	-111.2	3161.5	1577.4	3593.4	1466.7
				J	42.0	28.4	-48.7	2524.8	1821.8	1742.3	2046.8
			Min	I	-131.6	-194.2	-448.7	-1577.4	-3161.5	-1466.7	-3593.4
				J	-131.6	-156.5	-305.4	-1821.8	-2524.8	-2046.8	-1742.3
			RC ENV~2 Max	I	-29.8	-52.9	-165.8	1732.9	-579.5	1606.8	-825.3

				J	-29.8	-42.4	-112.9	829.0	-234.8	-146.8	376.9
			Min	I	-80.3	-138.3	-326.0	579.5	-1732.9	825.3	-1606.8
				J	-80.3	-111.4	-222.1	234.8	-829.0	-376.9	146.8
205	1	2	SX(RS)	I	51.2	93.8	0.5	541.3	541.3	21.2	21.2
				J	51.2	93.8	0.5	1015.8	1015.8	17.6	17.6
			SY(RS)	I	51.8	16.1	63.0	581.4	581.4	1595.0	1595.0
				J	51.8	16.1	63.0	467.7	467.7	1139.3	1139.3
			RC ENV~1 Max	I	8.9	46.2	-156.4	352.6	810.3	4374.6	-332.4
				J	8.9	59.8	-94.0	491.7	1539.9	1704.5	574.0
			Min	I	-98.5	-141.3	-500.1	-810.3	-352.6	332.4	-4374.6
				J	-98.5	-127.8	-356.7	-1539.9	-491.7	-574.0	-1704.5
			RC ENV~2 Max	I	-23.8	-36.5	-184.6	-225.0	498.9	3176.2	-1610.2
				J	-23.8	-26.0	-131.7	-460.4	1081.5	926.2	-465.6
			Min	I	-72.0	-94.0	-362.8	-498.9	225.0	1610.2	-3176.2
				J	-72.0	-67.0	-258.9	-1081.5	460.4	465.6	-926.2
206	1	2	SX(RS)	I	50.9	45.1	3.9	541.8	541.8	48.6	48.6
				J	50.9	45.1	3.9	621.6	621.6	33.9	33.9
			SY(RS)	I	65.8	55.6	88.0	581.1	581.1	1936.3	1936.3
				J	65.8	55.6	88.0	957.5	957.5	1302.0	1302.0
			RC ENV~1 Max	I	20.2	27.8	-148.7	348.2	814.0	4865.9	-79.2
				J	20.2	41.3	-86.2	572.1	1342.9	1830.6	773.3
			Min	I	-111.5	-83.5	-554.0	-814.0	-348.2	79.2	-4865.9
				J	-111.5	-69.9	-410.6	-1342.9	-572.1	-773.3	-1830.6
			RC ENV~2 Max	I	-28.1	-22.7	-204.3	-217.8	482.7	3503.0	-1809.1
				J	-28.1	-12.2	-151.3	-344.3	763.2	980.1	-513.3
			Min	I	-78.6	-52.2	-400.5	-482.7	217.8	1809.1	-3503.0
				J	-78.6	-25.3	-296.6	-763.2	344.3	513.3	-980.1
207	1	2	SX(RS)	I	104.0	63.5	73.2	1302.9	1302.9	3064.5	3064.5
				J	104.0	63.5	73.2	1124.9	1124.9	2540.9	2540.9
			SY(RS)	I	27.6	109.7	2.0	2691.7	2691.7	55.9	55.9
				J	27.6	109.7	2.0	1906.7	1906.7	41.7	41.7
			RC ENV~1 Max	I	28.5	96.4	2.6	3489.8	1893.6	3326.2	2802.9
				J	32.7	96.4	22.0	2608.7	1204.7	2361.7	2720.1
			Min	I	-181.7	-123.0	-143.8	-1893.6	-3489.8	-2802.9	-3326.2
				J	-176.3	-123.0	-124.4	-1204.7	-2608.7	-2720.1	-2361.7
			RC ENV~2 Max	I	-74.5	4.3	-48.8	1873.7	-244.3	1306.0	636.0
				J	-70.4	4.3	-29.4	1604.7	-275.5	670.2	919.1
			Min	I	-130.8	-37.2	-97.5	244.3	-1873.7	-636.0	-1306.0
				J	-126.6	-37.2	-78.1	275.5	-1604.7	-919.1	-670.2
208	1	2	SX(RS)	I	91.5	59.9	84.2	3414.5	3414.5	2094.5	2094.5
				J	91.5	59.9	84.2	3017.0	3017.0	1497.8	1497.8
			SY(RS)	I	27.6	73.0	2.2	3563.3	3563.3	83.6	83.6
				J	27.6	73.0	2.2	3041.0	3041.0	68.2	68.2
			RC ENV~1 Max	I	53.0	87.1	-20.5	3487.3	3639.3	3465.4	723.6
				J	48.9	87.1	-1.1	3067.1	3014.9	2180.6	814.9
			Min	I	-153.1	-58.9	-189.0	-3639.3	-3487.3	-723.6	-3465.4
				J	-158.5	-58.9	-169.6	-3014.9	-3067.1	-814.9	-2180.6
			RC ENV~2 Max	I	-21.6	36.4	-80.5	397.3	660.2	1962.1	-750.2
				J	-25.8	36.4	-61.2	422.7	414.5	1103.9	-237.4
			Min	I	-106.6	3.5	-128.2	-660.2	-397.3	750.2	-1962.1
				J	-110.8	3.5	-108.9	-414.5	-422.7	237.4	-1103.9
209	1	2	SX(RS)	I	91.5	59.8	84.6	3414.1	3414.1	2099.9	2099.9
				J	91.5	59.8	84.6	3016.6	3016.6	1500.9	1500.9
			SY(RS)	I	27.6	73.0	2.1	3563.3	3563.3	83.5	83.5
				J	27.6	73.0	2.1	3041.0	3041.0	68.2	68.2
			RC ENV~1 Max	I	53.5	87.2	-19.7	3474.8	3651.8	3454.6	745.2
				J	49.3	87.2	-0.3	3055.6	3026.5	2171.1	830.8
			Min	I	-129.4	-58.8	-188.8	-3651.8	-3474.8	-745.2	-3454.6
				J	-133.6	-58.8	-169.4	-3026.5	-3055.6	-830.8	-2171.1

			RC ENV~2 Max	I	-32.7	39.8	-81.3	452.9	777.0	2003.8	-771.8
				J	-36.9	39.8	-61.9	441.2	491.2	1132.6	-253.3
			Min	I	-88.3	-1.6	-130.0	-777.0	-452.9	771.8	-2003.8
				J	-92.5	-1.6	-110.7	-491.2	-441.2	253.3	-1132.6
210	1	2	SX(RS)	I	91.5	59.8	84.6	3414.1	3414.1	2099.9	2099.9
				J	91.5	59.8	84.6	3016.6	3016.6	1500.9	1500.9
			SY(RS)	I	27.6	73.0	2.2	3563.3	3563.3	83.6	83.6
				J	27.6	73.0	2.2	3041.0	3041.0	68.2	68.2
			RC ENV~1 Max	I	53.2	59.7	-19.3	3621.3	3505.4	3444.2	755.6
				J	49.0	59.7	0.0	3002.6	3079.5	2163.4	838.5
			Min	I	-142.2	-86.3	-188.5	-3505.4	-3621.3	-755.6	-3444.2
				J	-147.7	-86.3	-169.1	-3079.5	-3002.6	-838.5	-2163.4
			RC ENV~2 Max	I	-15.0	-1.5	-81.0	620.6	436.9	1970.1	-758.3
				J	-19.1	-1.5	-61.6	389.6	447.6	1108.7	-242.1
			Min	I	-100.0	-34.4	-128.7	-436.9	-620.6	758.3	-1970.1
				J	-104.1	-34.4	-109.3	-447.6	-389.6	242.1	-1108.7
211	1	1	SX(RS)	I	77.6	13.0	180.0	244.1	244.1	1464.7	1464.7
				J	77.6	13.0	180.0	157.5	157.5	388.6	388.6
			SY(RS)	I	52.3	135.6	11.8	1418.5	1418.5	164.3	164.3
				J	52.3	135.6	11.8	581.5	581.5	86.2	86.2
			RC ENV~1 Max	I	-134.2	88.0	199.4	2386.0	451.0	896.4	2033.1
				J	-146.7	88.0	199.4	1604.1	-68.6	-50.5	955.4
			Min	I	-425.0	-183.2	-160.6	-451.0	-2386.0	-2033.1	-896.4
				J	-441.2	-183.2	-160.6	68.6	-1604.1	-955.4	50.5
			RC ENV~2 Max	I	-200.2	-32.9	68.1	1715.0	-681.5	-219.8	1156.2
				J	-212.7	-32.9	76.8	1156.7	-461.9	-340.3	692.3
			Min	I	-311.2	-83.7	-13.7	681.5	-1715.0	-1156.2	219.8
				J	-323.7	-83.7	-22.4	461.9	-1156.7	-692.3	340.3
212	1	1	SX(RS)	I	77.6	13.0	182.5	157.5	157.5	388.6	388.6
				J	77.6	13.0	182.5	71.0	71.0	1036.3	1036.3
			SY(RS)	I	52.3	140.6	11.9	581.5	581.5	86.2	86.2
				J	52.3	140.6	11.9	568.6	568.6	15.5	15.5
			RC ENV~1 Max	I	-146.7	93.0	201.9	1604.1	-68.6	-50.5	955.4
				J	-159.2	93.0	201.9	901.3	236.0	726.5	1346.0
			Min	I	-441.2	-188.3	-163.1	68.6	-1604.1	-955.4	50.5
				J	-457.5	-188.3	-163.1	-236.0	-901.3	-1346.0	-726.5
			RC ENV~2 Max	I	-212.7	-32.9	76.8	1156.7	-461.9	-340.3	692.3
				J	-225.2	-32.9	85.6	598.4	-242.4	-94.8	555.6
			Min	I	-323.7	-83.7	-22.4	461.9	-1156.7	-692.3	340.3
				J	-336.2	-83.7	-31.1	242.4	-598.4	-555.6	94.8
213	1	1	SX(RS)	I	77.6	13.0	184.1	71.0	71.0	1036.3	1036.3
				J	77.6	13.0	184.1	18.1	18.1	2237.8	2237.8
			SY(RS)	I	52.3	144.1	11.9	568.6	568.6	15.5	15.5
				J	52.3	144.1	11.9	1458.9	1458.9	74.8	74.8
			RC ENV~1 Max	I	-159.2	96.5	203.5	901.3	236.0	726.5	1346.0
				J	-171.7	96.5	203.5	1474.1	1443.7	2057.3	2418.3
			Min	I	-457.5	-191.7	-164.7	-236.0	-901.3	-1346.0	-726.5
				J	-473.7	-191.7	-164.7	-1443.7	-1474.1	-2418.3	-2057.3
			RC ENV~2 Max	I	-225.2	-32.9	85.6	598.4	-242.4	-94.8	555.6
				J	-237.7	-32.9	94.3	41.5	-14.6	469.9	757.5
			Min	I	-336.2	-83.7	-31.1	242.4	-598.4	-555.6	94.8
				J	-348.7	-83.7	-39.8	14.6	-41.5	-757.5	-469.9
214	1	1	SX(RS)	I	77.6	13.0	185.0	18.1	18.1	2237.8	2237.8
				J	77.6	13.0	185.0	103.6	103.6	3463.8	3463.8
			SY(RS)	I	52.3	146.0	11.9	1458.9	1458.9	74.8	74.8
				J	52.3	146.0	11.9	2416.4	2416.4	153.5	153.5
			RC ENV~1 Max	I	-171.7	98.4	204.4	1474.1	1443.7	2057.3	2418.3
				J	-184.2	98.4	204.4	2114.1	2718.6	3412.5	3515.0
			Min	I	-473.7	-193.6	-165.6	-1443.7	-1474.1	-2418.3	-2057.3
				J	-490.0	-193.6	-165.6	-2718.6	-2114.1	-3515.0	-3412.5

			RC ENV~2 Max	I	-237.7	-32.9	94.3	41.5	-14.6	469.9	757.5
				J	-250.2	-32.9	103.0	-196.7	518.1	1125.2	1050.0
			Min	I	-348.7	-83.7	-39.8	14.6	-41.5	-757.5	-469.9
				J	-361.2	-83.7	-48.5	-518.1	196.7	-1050.0	-1125.2
215	1	1	SX(RS)	I	77.6	13.0	185.4	103.6	103.6	3463.8	3463.8
				J	77.6	13.0	185.4	190.4	190.4	4695.9	4695.9
			SY(RS)	I	52.3	146.8	11.9	2416.4	2416.4	153.5	153.5
				J	52.3	146.8	11.9	3387.9	3387.9	232.6	232.6
			RC ENV~1 Max	I	-184.2	99.2	204.7	2114.1	2718.6	3412.5	3515.0
				J	-196.7	99.2	204.7	2768.2	4007.6	4774.0	4617.9
			Min	I	-490.0	-194.4	-166.0	-2718.6	-2114.1	-3515.0	-3412.5
				J	-506.2	-194.4	-166.0	-4007.6	-2768.2	-4617.9	-4774.0
			RC ENV~2 Max	I	-250.2	-32.9	103.0	-196.7	518.1	1125.2	1050.0
				J	-262.7	-32.9	111.7	-416.2	1076.4	1840.7	1402.7
			Min	I	-361.2	-83.7	-48.5	-518.1	196.7	-1050.0	-1125.2
				J	-373.7	-83.7	-57.3	-1076.4	416.2	-1402.7	-1840.7
216	1	1	SX(RS)	I	2.3	1.0	172.0	12.0	12.0	295.7	295.7
				J	2.3	1.0	172.0	11.8	11.8	1332.3	1332.3
			SY(RS)	I	19.9	187.6	49.6	2310.4	2310.4	322.8	322.8
				J	19.9	187.6	49.6	1059.4	1059.4	16.0	16.0
			RC ENV~1 Max	I	-302.1	185.1	96.1	2257.0	2363.8	259.6	386.1
				J	-314.6	185.1	96.1	989.1	1129.8	762.7	1902.0
			Min	I	-749.8	-190.2	-248.0	-2363.8	-2257.0	-386.1	-259.6
				J	-766.1	-190.2	-248.0	-1129.8	-989.1	-1902.0	-762.7
			RC ENV~2 Max	I	-249.5	0.7	-38.0	-13.9	146.8	47.1	161.7
				J	-262.0	0.7	-20.6	-41.7	142.0	-357.1	1081.4
			Min	I	-542.7	-4.2	-159.8	-146.8	13.9	-161.7	-47.1
				J	-555.2	-4.2	-170.2	-142.0	41.7	-1081.4	357.1
217	1	1	SX(RS)	I	2.3	1.1	176.7	11.8	11.8	1332.3	1332.3
				J	2.3	1.1	176.7	15.2	15.2	2499.3	2499.3
			SY(RS)	I	19.9	192.5	50.9	1059.4	1059.4	16.0	16.0
				J	19.9	192.5	50.9	224.3	224.3	347.7	347.7
			RC ENV~1 Max	I	-314.6	190.0	100.7	989.1	1129.8	762.7	1902.0
				J	-327.1	190.0	100.7	137.1	311.6	1423.2	3575.4
			Min	I	-766.1	-195.1	-252.7	-1129.8	-989.1	-1902.0	-762.7
				J	-782.3	-195.1	-255.8	-311.6	-137.1	-3575.4	-1423.2
			RC ENV~2 Max	I	-262.0	0.7	-20.6	-41.7	142.0	-357.1	1081.4
				J	-274.5	0.7	-3.2	-69.6	137.2	-436.4	2251.2
			Min	I	-555.2	-4.2	-170.2	-142.0	41.7	-1081.4	357.1
				J	-567.7	-4.2	-180.7	-137.2	69.6	-2251.2	436.4
218	1	1	SX(RS)	I	2.3	1.1	179.7	15.2	15.2	2499.3	2499.3
				J	2.3	1.1	179.7	20.6	20.6	3693.0	3693.0
			SY(RS)	I	19.9	195.9	51.8	224.3	224.3	347.7	347.7
				J	19.9	195.9	51.8	1530.0	1530.0	692.9	692.9
			RC ENV~1 Max	I	-327.1	193.3	103.7	137.1	311.6	1423.2	3575.4
				J	-339.6	193.3	103.7	1425.9	1634.2	2110.6	5275.5
			Min	I	-782.3	-198.4	-255.8	-311.6	-137.1	-3575.4	-1423.2
				J	-798.6	-198.4	-279.2	-1634.2	-1425.9	-5275.5	-2110.6
			RC ENV~2 Max	I	-274.5	0.7	-3.2	-69.6	137.2	-436.4	2251.2
				J	-287.0	0.7	14.2	-97.4	132.5	-399.5	3490.7
			Min	I	-567.7	-4.2	-180.7	-137.2	69.6	-2251.2	436.4
				J	-580.2	-4.2	-196.3	-132.5	97.4	-3490.7	399.5
219	1	1	SX(RS)	I	2.3	1.1	181.2	20.6	20.6	3693.0	3693.0
				J	2.3	1.1	181.2	26.8	26.8	4899.0	4899.0
			SY(RS)	I	19.9	197.7	52.3	1530.0	1530.0	692.9	692.9
				J	19.9	197.7	52.3	2848.4	2848.4	1041.4	1041.4
			RC ENV~1 Max	I	-339.6	195.2	105.3	1425.9	1634.2	2110.6	5275.5
				J	-352.1	195.2	105.3	2727.3	2969.4	2810.2	6987.9
			Min	I	-798.6	-200.3	-279.2	-1634.2	-1425.9	-5275.5	-2110.6

				J	-814.8	-200.3	-305.4	-2969.4	-2727.3	-6987.9	-2810.2
			RC ENV~2 Max	I	-287.0	0.7	14.2	-97.4	132.5	-399.5	3490.7
				J	-299.5	0.7	31.7	-119.6	137.2	-246.6	4799.8
			Min	I	-580.2	-4.2	-196.3	-132.5	97.4	-3490.7	399.5
				J	-592.7	-4.2	-213.7	-137.2	119.6	-4799.8	246.6
220	1	1	SX(RS)	I	2.3	1.1	181.7	26.8	26.8	4899.0	4899.0
				J	2.3	1.1	181.7	33.4	33.4	6109.4	6109.4
			SY(RS)	I	19.9	198.5	52.4	2848.4	2848.4	1041.4	1041.4
				J	19.9	198.5	52.4	4171.4	4171.4	1390.9	1390.9
			RC ENV~1 Max	I	-352.1	195.9	105.8	2727.3	2969.4	2810.2	6987.9
				J	-364.6	195.9	105.8	4033.4	4309.4	3514.1	8789.4
			Min	I	-814.8	-201.0	-305.4	-2969.4	-2727.3	-6987.9	-2810.2
				J	-831.1	-201.0	-331.5	-4309.4	-4033.4	-8789.4	-3514.1
			RC ENV~2 Max	I	-299.5	0.7	31.7	-119.6	137.2	-246.6	4799.8
				J	-312.0	0.7	49.1	-122.9	160.9	22.5	6206.7
			Min	I	-592.7	-4.2	-213.7	-137.2	119.6	-4799.8	246.6
				J	-605.2	-4.2	-231.2	-160.9	122.9	-6206.7	-22.5
221	1	1	SX(RS)	I	2.4	2.8	172.3	36.1	36.1	295.1	295.1
				J	2.4	2.8	172.3	20.5	20.5	1333.6	1333.6
			SY(RS)	I	19.9	187.6	49.6	2310.4	2310.4	322.8	322.8
				J	19.9	187.6	49.6	1059.4	1059.4	16.0	16.0
			RC ENV~1 Max	I	-324.7	179.7	97.5	2466.8	2154.0	259.4	386.3
				J	-337.2	179.7	97.5	1162.9	955.9	770.8	1896.3
			Min	I	-850.8	-195.6	-247.2	-2154.0	-2466.8	-386.3	-259.4
				J	-867.1	-195.6	-247.2	-955.9	-1162.9	-1896.3	-770.8
			RC ENV~2 Max	I	-315.5	-7.7	-37.2	280.4	-147.5	41.9	167.0
				J	-328.0	-7.7	-19.8	190.2	-89.9	-357.2	1081.5
			Min	I	-608.7	-13.5	-159.0	147.5	-280.4	-167.0	-41.9
				J	-621.2	-13.5	-169.5	89.9	-190.2	-1081.5	357.2
222	1	1	SX(RS)	I	2.4	2.8	177.0	20.5	20.5	1333.6	1333.6
				J	2.4	2.8	177.0	15.0	15.0	2502.7	2502.7
			SY(RS)	I	19.9	192.5	50.9	1059.4	1059.4	16.0	16.0
				J	19.9	192.5	50.9	224.3	224.3	347.7	347.7
			RC ENV~1 Max	I	-337.2	184.6	102.2	1162.9	955.9	770.8	1896.3
				J	-349.7	184.6	102.2	274.9	173.8	1440.8	3564.7
			Min	I	-867.1	-200.5	-251.9	-955.9	-1162.9	-1896.3	-770.8
				J	-883.3	-200.5	-254.9	-173.8	-274.9	-3564.7	-1440.8
			RC ENV~2 Max	I	-328.0	-7.7	-19.8	190.2	-89.9	-357.2	1081.5
				J	-340.5	-7.7	-2.4	100.0	-32.3	-431.2	2246.1
			Min	I	-621.2	-13.5	-169.5	89.9	-190.2	-1081.5	357.2
				J	-633.7	-13.5	-179.9	32.3	-100.0	-2246.1	431.2
223	1	1	SX(RS)	I	2.4	2.9	180.0	15.0	15.0	2502.7	2502.7
				J	2.4	2.9	180.0	27.3	27.3	3698.7	3698.7
			SY(RS)	I	19.9	195.9	51.8	224.3	224.3	347.7	347.7
				J	19.9	195.9	51.8	1530.0	1530.0	692.9	692.9
			RC ENV~1 Max	I	-349.7	187.9	105.1	274.9	173.8	1440.8	3564.7
				J	-362.2	187.9	105.1	1527.7	1532.3	2137.5	5259.9
			Min	I	-883.3	-203.8	-254.9	-173.8	-274.9	-3564.7	-1440.8
				J	-899.6	-203.8	-278.3	-1532.3	-1527.7	-5259.9	-2137.5
			RC ENV~2 Max	I	-340.5	-7.7	-2.4	100.0	-32.3	-431.2	2246.1
				J	-353.0	-7.7	15.0	9.8	30.2	-389.2	3480.3
			Min	I	-633.7	-13.5	-179.9	32.3	-100.0	-2246.1	431.2
				J	-646.2	-13.5	-195.5	-30.2	-9.8	-3480.3	389.2
224	1	1	SX(RS)	I	2.4	2.9	181.6	27.3	27.3	3698.7	3698.7
				J	2.4	2.9	181.6	44.6	44.6	4907.0	4907.0
			SY(RS)	I	19.9	197.7	52.3	1530.0	1530.0	692.9	692.9
				J	19.9	197.7	52.3	2848.3	2848.3	1041.4	1041.4
			RC ENV~1 Max	I	-362.2	189.8	106.7	1527.7	1532.3	2137.5	5259.9
				J	-374.7	189.8	106.7	2793.1	2903.6	2846.6	6967.5

			Min	I	-899.6	-205.7	-278.3	-1532.3	-1527.7	-5259.9	-2137.5
				J	-915.8	-205.7	-304.5	-2903.6	-2793.1	-6967.5	-2846.6
			RC ENV~2 Max	I	-353.0	-7.7	15.0	9.8	30.2	-389.2	3480.3
				J	-365.5	-7.7	32.4	-54.5	101.0	-231.0	4784.3
			Min	I	-646.2	-13.5	-195.5	-30.2	-9.8	-3480.3	389.2
				J	-658.7	-13.5	-213.0	-101.0	54.5	-4784.3	231.0
225	1	1	SX(RS)	I	2.4	2.9	182.1	44.6	44.6	4907.0	4907.0
				J	2.4	2.9	182.1	63.1	63.1	6119.7	6119.7
			SY(RS)	I	19.9	198.5	52.4	2848.3	2848.3	1041.4	1041.4
				J	19.9	198.5	52.4	4171.4	4171.4	1390.9	1390.9
			RC ENV~1 Max	I	-374.7	190.5	107.2	2793.1	2903.6	2846.6	6967.5
				J	-387.2	190.5	107.2	4063.3	4279.5	3560.0	8767.6
			Min	I	-915.8	-206.4	-304.5	-2903.6	-2793.1	-6967.5	-2846.6
				J	-932.1	-206.4	-330.6	-4279.5	-4063.3	-8767.6	-3560.0
			RC ENV~2 Max	I	-365.5	-7.7	32.4	-54.5	101.0	-231.0	4784.3
				J	-378.0	-7.7	49.8	-107.5	184.6	43.2	6185.9
			Min	I	-658.7	-13.5	-213.0	-101.0	54.5	-4784.3	231.0
				J	-671.2	-13.5	-230.4	-184.6	107.5	-6185.9	-43.2
226	1	1	SX(RS)	I	77.7	13.0	180.8	242.4	242.4	1469.6	1469.6
				J	77.7	13.0	180.8	156.6	156.6	388.3	388.3
			SY(RS)	I	52.3	135.6	11.8	1418.5	1418.5	164.3	164.3
				J	52.3	135.6	11.8	581.5	581.5	86.2	86.2
			RC ENV~1 Max	I	-170.1	192.7	199.5	394.7	2471.7	909.0	2030.2
				J	-182.6	192.7	199.5	-61.5	1609.8	-47.5	898.1
			Min	I	-538.0	-78.5	-162.1	-2471.7	-394.7	-2030.2	-909.0
				J	-554.2	-78.5	-162.1	-1609.8	61.5	-898.1	47.5
			RC ENV~2 Max	I	-244.9	93.9	60.9	-750.9	1784.5	-136.3	1072.7
				J	-257.4	93.9	69.6	-463.9	1158.7	-304.9	656.9
			Min	I	-387.4	43.1	-20.9	-1784.5	750.9	-1072.7	136.3
				J	-399.9	43.1	-29.6	-1158.7	463.9	-656.9	304.9
227	1	1	SX(RS)	I	77.7	13.0	183.3	156.6	156.6	388.3	388.3
				J	77.7	13.0	183.3	72.3	72.3	1040.9	1040.9
			SY(RS)	I	52.3	140.6	11.9	581.5	581.5	86.2	86.2
				J	52.3	140.6	11.9	568.6	568.6	15.5	15.5
			RC ENV~1 Max	I	-182.6	197.8	202.0	-61.5	1609.8	-47.5	898.1
				J	-195.1	197.8	202.0	306.5	830.8	729.9	1351.9
			Min	I	-554.2	-83.5	-164.5	-1609.8	61.5	-898.1	47.5
				J	-570.5	-83.5	-164.5	-830.8	-306.5	-1351.9	-729.9
			RC ENV~2 Max	I	-257.4	93.9	69.6	-463.9	1158.7	-304.9	656.9
				J	-269.9	93.9	78.3	-176.8	532.8	-107.5	568.3
			Min	I	-399.9	43.1	-29.6	-1158.7	463.9	-656.9	304.9
				J	-412.4	43.1	-38.3	-532.8	176.8	-568.3	107.5
228	1	1	SX(RS)	I	77.7	13.0	184.9	72.3	72.3	1040.9	1040.9
				J	77.7	13.0	184.9	30.1	30.1	2247.9	2247.9
			SY(RS)	I	52.3	144.1	11.9	568.6	568.6	15.5	15.5
				J	52.3	144.1	11.9	1458.9	1458.9	74.8	74.8
			RC ENV~1 Max	I	-195.1	201.2	203.6	306.5	830.8	729.9	1351.9
				J	-207.6	201.2	203.6	1577.6	1340.2	2061.7	2434.1
			Min	I	-570.5	-87.0	-166.2	-830.8	-306.5	-1351.9	-729.9
				J	-586.7	-87.0	-166.2	-1340.2	-1577.6	-2434.1	-2061.7
			RC ENV~2 Max	I	-269.9	93.9	78.3	-176.8	532.8	-107.5	568.3
				J	-282.4	93.9	87.1	119.3	-91.0	409.1	818.2
			Min	I	-412.4	43.1	-38.3	-532.8	176.8	-568.3	107.5
				J	-424.9	43.1	-47.1	91.0	-119.3	-818.2	-409.1
229	1	1	SX(RS)	I	77.7	13.0	185.8	30.1	30.1	2247.9	2247.9
				J	77.7	13.0	185.8	107.7	107.7	3479.2	3479.2
			SY(RS)	I	52.3	146.0	11.9	1458.9	1458.9	74.8	74.8
				J	52.3	146.0	11.9	2416.4	2416.4	153.5	153.5
			RC ENV~1 Max	I	-207.6	203.2	204.5	1577.6	1340.2	2061.7	2434.1

				J	-220.1	203.2	204.5	2915.9	1916.8	3417.8	3540.6
			Min	I	-586.7	-88.9	-167.1	-1340.2	-1577.6	-2434.1	-2061.7
				J	-603.0	-88.9	-167.1	-1916.8	-2915.9	-3540.6	-3417.8
		RC ENV~2	Max	I	-282.4	93.9	87.1	119.3	-91.0	409.1	818.2
				J	-294.9	93.9	95.8	718.8	-397.3	1016.4	1158.8
			Min	I	-424.9	43.1	-47.1	91.0	-119.3	-818.2	-409.1
				J	-437.4	43.1	-55.8	397.3	-718.8	-1158.8	-1016.4
230	1	1	SX(RS)	I	77.7	13.0	186.2	107.7	107.7	3479.2	3479.2
				J	77.7	13.0	186.2	193.1	193.1	4716.8	4716.8
			SY(RS)	I	52.3	146.8	11.9	2416.4	2416.4	153.5	153.5
				J	52.3	146.8	11.9	3387.9	3387.9	232.6	232.6
		RC ENV~1	Max	I	-220.1	203.9	204.9	2915.9	1916.8	3417.8	3540.6
				J	-232.6	203.9	204.9	4268.3	2507.5	4780.2	4653.3
			Min	I	-603.0	-89.7	-167.4	-1916.8	-2915.9	-3540.6	-3417.8
				J	-619.2	-89.7	-167.4	-2507.5	-4268.3	-4653.3	-4780.2
		RC ENV~2	Max	I	-294.9	93.9	95.8	718.8	-397.3	1016.4	1158.8
				J	-307.4	93.9	104.5	1344.6	-684.4	1683.8	1559.6
			Min	I	-437.4	43.1	-55.8	397.3	-718.8	-1158.8	-1016.4
				J	-449.9	43.1	-64.5	684.4	-1344.6	-1559.6	-1683.8
231	1	1	SX(RS)	I	77.6	13.0	180.0	244.1	244.1	1464.7	1464.7
				J	77.6	13.0	180.0	157.5	157.5	388.6	388.6
			SY(RS)	I	52.4	135.7	11.8	1419.4	1419.4	164.4	164.4
				J	52.4	135.7	11.8	581.8	581.8	86.3	86.3
		RC ENV~1	Max	I	-168.5	82.5	160.6	2419.4	419.4	2012.8	916.6
				J	-181.0	82.5	160.6	1520.8	-63.8	823.4	-30.2
			Min	I	-526.4	-188.8	-199.4	-419.4	-2419.4	-916.6	-2012.8
				J	-542.7	-188.8	-199.4	63.8	-1520.8	30.2	-823.4
		RC ENV~2	Max	I	-245.8	-41.2	20.8	1661.3	-795.7	1127.9	-106.5
				J	-258.3	-41.2	26.0	1101.4	-521.3	607.8	-262.5
			Min	I	-379.3	-84.0	-78.6	795.7	-1661.3	106.5	-1127.9
				J	-391.8	-84.0	-83.8	521.3	-1101.4	262.5	-607.8
232	1	1	SX(RS)	I	77.6	13.0	182.5	157.5	157.5	388.6	388.6
				J	77.6	13.0	182.5	71.0	71.0	1036.3	1036.3
			SY(RS)	I	52.4	140.7	11.9	581.8	581.8	86.3	86.3
				J	52.4	140.7	11.9	568.8	568.8	15.6	15.6
		RC ENV~1	Max	I	-181.0	87.6	163.1	1520.8	-63.8	823.4	-30.2
				J	-193.5	87.6	163.1	860.0	277.6	1325.8	746.7
			Min	I	-542.7	-193.9	-201.9	63.8	-1520.8	30.2	-823.4
				J	-558.9	-193.9	-201.9	-277.6	-860.0	-746.7	-1325.8
		RC ENV~2	Max	I	-258.3	-41.2	26.0	1101.4	-521.3	607.8	-262.5
				J	-270.8	-41.2	31.2	541.5	-246.9	490.2	26.0
			Min	I	-391.8	-84.0	-83.8	521.3	-1101.4	262.5	-607.8
				J	-404.3	-84.0	-89.0	246.9	-541.5	-26.0	-490.2
233	1	1	SX(RS)	I	77.6	13.0	184.1	71.0	71.0	1036.3	1036.3
				J	77.6	13.0	184.1	18.1	18.1	2237.8	2237.8
			SY(RS)	I	52.4	144.2	11.9	568.8	568.8	15.6	15.6
				J	52.4	144.2	11.9	1459.6	1459.6	74.9	74.9
		RC ENV~1	Max	I	-193.5	91.0	164.7	860.0	277.6	1325.8	746.7
				J	-206.0	91.0	164.7	1396.4	1522.9	2398.0	2077.6
			Min	I	-558.9	-197.3	-203.5	-277.6	-860.0	-746.7	-1325.8
				J	-575.2	-197.3	-203.5	-1522.9	-1396.4	-2077.6	-2398.0
		RC ENV~2	Max	I	-270.8	-41.2	31.2	541.5	-246.9	490.2	26.0
				J	-283.3	-41.2	36.5	3.0	63.7	681.1	602.2
			Min	I	-404.3	-84.0	-89.0	246.9	-541.5	-26.0	-490.2
				J	-416.8	-84.0	-94.2	-63.7	-3.0	-602.2	-681.1
234	1	1	SX(RS)	I	77.6	13.0	185.0	18.1	18.1	2237.8	2237.8
				J	77.6	13.0	185.0	103.6	103.6	3463.8	3463.8
			SY(RS)	I	52.4	146.1	11.9	1459.6	1459.6	74.9	74.9
				J	52.4	146.1	11.9	2417.6	2417.6	153.7	153.7

			RC ENV~1 Max	I	-206.0	92.9	165.6	1396.4	1522.9	2398.0	2077.6
				J	-218.5	92.9	165.6	1999.9	2835.3	3494.7	3432.8
			Min	I	-575.2	-199.3	-204.4	-1522.9	-1396.4	-2077.6	-2398.0
				J	-591.4	-199.3	-204.4	-2835.3	-1999.9	-3432.8	-3494.7
			RC ENV~2 Max	I	-283.3	-41.2	36.5	3.0	63.7	681.1	602.2
				J	-295.8	-41.2	41.7	-282.5	578.4	939.5	1245.7
			Min	I	-416.8	-84.0	-94.2	-63.7	-3.0	-602.2	-681.1
				J	-429.3	-84.0	-99.5	-578.4	282.5	-1245.7	-939.5
235	1	1	SX(RS)	I	77.6	13.0	185.4	103.6	103.6	3463.8	3463.8
				J	77.6	13.0	185.4	190.4	190.4	4695.9	4695.9
			SY(RS)	I	52.4	146.9	11.9	2417.6	2417.6	153.7	153.7
				J	52.4	146.9	11.9	3389.7	3389.7	232.8	232.8
			RC ENV~1 Max	I	-218.5	93.7	166.0	1999.9	2835.3	3494.7	3432.8
				J	-231.0	93.7	166.0	2617.6	4161.8	4597.6	4794.3
			Min	I	-591.4	-200.0	-204.7	-2835.3	-1999.9	-3432.8	-3494.7
				J	-607.7	-200.0	-204.7	-4161.8	-2617.6	-4794.3	-4597.6
			RC ENV~2 Max	I	-295.8	-41.2	41.7	-282.5	578.4	939.5	1245.7
				J	-308.3	-41.2	46.9	-561.5	1138.3	1234.9	1926.2
			Min	I	-429.3	-84.0	-99.5	-578.4	282.5	-1245.7	-939.5
				J	-441.8	-84.0	-104.7	-1138.3	561.5	-1926.2	-1234.9
236	1	1	SX(RS)	I	2.3	1.0	172.0	12.0	12.0	295.7	295.7
				J	2.3	1.0	172.0	11.8	11.8	1332.4	1332.4
			SY(RS)	I	19.9	187.7	49.6	2311.5	2311.5	322.8	322.8
				J	19.9	187.7	49.6	1059.9	1059.9	16.0	16.0
			RC ENV~1 Max	I	-330.8	190.7	246.9	2215.2	2407.8	378.7	267.0
				J	-343.3	190.7	246.9	983.5	1136.3	1887.7	777.0
			Min	I	-836.0	-184.7	-97.1	-2407.8	-2215.2	-267.0	-378.7
				J	-852.2	-184.7	-97.1	-1136.3	-983.5	-777.0	-1887.7
			RC ENV~2 Max	I	-341.4	15.4	150.5	-93.6	254.9	59.0	-8.7
				J	-353.9	15.4	156.7	-74.0	166.4	1033.0	-333.1
			Min	I	-599.5	2.9	46.8	-254.9	93.6	8.7	-59.0
				J	-612.0	2.9	36.3	-166.4	74.0	333.1	-1033.0
237	1	1	SX(RS)	I	2.3	1.1	176.7	11.8	11.8	1332.4	1332.4
				J	2.3	1.1	176.7	15.2	15.2	2499.3	2499.3
			SY(RS)	I	19.9	192.6	50.9	1059.9	1059.9	16.0	16.0
				J	19.9	192.6	50.9	224.5	224.5	347.7	347.7
			RC ENV~1 Max	I	-343.3	195.6	251.6	983.5	1136.3	1887.7	777.0
				J	-355.8	195.6	251.6	167.9	281.0	3554.1	1444.6
			Min	I	-852.2	-189.6	-101.8	-1136.3	-983.5	-777.0	-1887.7
				J	-868.5	-189.6	-101.8	-281.0	-167.9	-1444.6	-3554.1
			RC ENV~2 Max	I	-353.9	15.4	156.7	-74.0	166.4	1033.0	-333.1
				J	-366.4	15.4	163.0	-16.5	83.3	2098.7	-540.4
			Min	I	-612.0	2.9	36.3	-166.4	74.0	333.1	-1033.0
				J	-624.5	2.9	25.9	-83.3	16.5	540.4	-2098.7
238	1	1	SX(RS)	I	2.3	1.1	179.7	15.2	15.2	2499.3	2499.3
				J	2.3	1.1	179.7	20.6	20.6	3693.1	3693.1
			SY(RS)	I	19.9	196.0	51.8	224.5	224.5	347.7	347.7
				J	19.9	196.0	51.8	1530.7	1530.7	692.9	692.9
			RC ENV~1 Max	I	-355.8	198.9	254.6	167.9	281.0	3554.1	1444.6
				J	-368.3	198.9	254.6	1494.1	1567.4	5247.3	2138.9
			Min	I	-868.5	-193.0	-104.8	-281.0	-167.9	-1444.6	-3554.1
				J	-884.7	-193.0	-104.8	-1567.4	-1494.1	-2138.9	-5247.3
			RC ENV~2 Max	I	-366.4	15.4	163.0	-16.5	83.3	2098.7	-540.4
				J	-378.9	15.4	169.3	74.0	42.1	3206.2	-678.1
			Min	I	-624.5	2.9	25.9	-83.3	16.5	540.4	-2098.7
				J	-637.0	2.9	15.4	-42.1	-74.0	678.1	-3206.2
239	1	1	SX(RS)	I	2.3	1.1	181.2	20.6	20.6	3693.1	3693.1
				J	2.3	1.1	181.2	26.8	26.8	4899.1	4899.1
			SY(RS)	I	19.9	197.8	52.3	1530.7	1530.7	692.9	692.9
				J	19.9	197.8	52.3	2849.7	2849.7	1041.4	1041.4

			RC ENV~1 Max	I	-368.3	200.8	256.1	1494.1	1567.4	5247.3	2138.9
				J	-380.8	200.8	256.1	2832.9	2866.4	6952.8	2845.4
			Min	I	-884.7	-194.9	-106.3	-1567.4	-1494.1	-2138.9	-5247.3
				J	-901.0	-194.9	-106.3	-2866.4	-2832.9	-2845.4	-6952.8
			RC ENV~2 Max	I	-378.9	15.4	169.3	74.0	42.1	3206.2	-678.1
				J	-391.4	15.4	175.5	166.3	18.3	4355.5	-746.1
			Min	I	-637.0	2.9	15.4	-42.1	-74.0	678.1	-3206.2
				J	-649.5	2.9	5.0	-18.3	-166.3	746.1	-4355.5
240	1	1	SX(RS)	I	2.3	1.1	181.8	26.8	26.8	4899.1	4899.1
				J	2.3	1.1	181.8	33.4	33.4	6109.5	6109.5
			SY(RS)	I	19.9	198.6	52.4	2849.7	2849.7	1041.4	1041.4
				J	19.9	198.6	52.4	4173.3	4173.3	1390.9	1390.9
			RC ENV~1 Max	I	-380.8	201.5	256.7	2832.9	2866.4	6952.8	2845.4
				J	-393.3	201.5	258.4	4176.4	4170.2	8662.6	3556.3
			Min	I	-901.0	-195.6	-106.8	-2866.4	-2832.9	-2845.4	-6952.8
				J	-917.2	-195.6	-106.8	-4170.2	-4176.4	-3556.3	-8662.6
			RC ENV~2 Max	I	-391.4	15.4	175.5	166.3	18.3	4355.5	-746.1
				J	-403.9	15.4	182.5	267.6	-1.8	5546.6	-744.4
			Min	I	-649.5	2.9	5.0	-18.3	-166.3	746.1	-4355.5
				J	-662.0	2.9	-5.5	1.8	-267.6	744.4	-5546.6
241	1	1	SX(RS)	I	2.4	2.8	172.3	36.2	36.2	295.1	295.1
				J	2.4	2.8	172.3	20.6	20.6	1333.6	1333.6
			SY(RS)	I	19.9	187.7	49.6	2311.4	2311.4	322.8	322.8
				J	19.9	187.7	49.6	1059.9	1059.9	16.0	16.0
			RC ENV~1 Max	I	-328.8	183.6	247.6	2417.5	2205.4	378.4	267.3
				J	-341.3	183.6	247.6	1138.2	981.6	1891.0	776.1
			Min	I	-837.7	-191.9	-97.1	-2205.4	-2417.5	-267.3	-378.4
				J	-853.9	-191.9	-97.1	-981.6	-1138.2	-776.1	-1891.0
			RC ENV~2 Max	I	-339.4	-4.1	153.1	222.4	-103.4	62.5	-15.5
				J	-351.9	-4.1	159.4	156.0	-75.6	1057.1	-357.2
			Min	I	-600.1	-10.2	49.4	103.4	-222.4	15.5	-62.5
				J	-612.6	-10.2	39.0	75.6	-156.0	357.2	-1057.1
242	1	1	SX(RS)	I	2.4	2.8	177.0	20.6	20.6	1333.6	1333.6
				J	2.4	2.8	177.0	15.0	15.0	2502.8	2502.8
			SY(RS)	I	19.9	192.6	50.9	1059.9	1059.9	16.0	16.0
				J	19.9	192.6	50.9	224.5	224.5	347.7	347.7
			RC ENV~1 Max	I	-341.3	188.4	252.3	1138.2	981.6	1891.0	776.1
				J	-353.8	188.4	252.3	275.0	173.9	3562.1	1443.4
			Min	I	-853.9	-196.8	-101.8	-981.6	-1138.2	-776.1	-1891.0
				J	-870.2	-196.8	-101.8	-173.9	-275.0	-1443.4	-3562.1
			RC ENV~2 Max	I	-351.9	-4.1	159.4	156.0	-75.6	1057.1	-357.2
				J	-364.4	-4.1	165.6	89.5	-32.0	2140.5	-582.2
			Min	I	-612.6	-10.2	39.0	75.6	-156.0	357.2	-1057.1
				J	-625.1	-10.2	28.5	32.0	-89.5	582.2	-2140.5
243	1	1	SX(RS)	I	2.4	2.9	180.0	15.0	15.0	2502.8	2502.8
				J	2.4	2.9	180.0	27.3	27.3	3698.8	3698.8
			SY(RS)	I	19.9	196.0	51.8	224.5	224.5	347.7	347.7
				J	19.9	196.0	51.8	1530.7	1530.7	692.9	692.9
			RC ENV~1 Max	I	-353.8	191.8	255.3	275.0	173.9	3562.1	1443.4
				J	-366.3	191.8	255.3	1553.5	1508.0	5260.0	2137.6
			Min	I	-870.2	-200.1	-104.7	-173.9	-275.0	-1443.4	-3562.1
				J	-886.4	-200.1	-104.7	-1508.0	-1553.5	-2137.6	-5260.0
			RC ENV~2 Max	I	-364.4	-4.1	165.6	89.5	-32.0	2140.5	-582.2
				J	-376.9	-4.1	171.9	28.2	23.4	3265.7	-737.5
			Min	I	-625.1	-10.2	28.5	32.0	-89.5	582.2	-2140.5
				J	-637.6	-10.2	18.1	-23.4	-28.2	737.5	-3265.7
244	1	1	SX(RS)	I	2.4	2.9	181.6	27.3	27.3	3698.8	3698.8
				J	2.4	2.9	181.6	44.8	44.8	4907.1	4907.1
			SY(RS)	I	19.9	197.8	52.3	1530.7	1530.7	692.9	692.9

				J	19.9	197.8	52.3	2849.6	2849.6	1041.4	1041.4
		RC ENV~1	Max	I	-366.3	193.7	256.9	1553.5	1508.0	5260.0	2137.6
				J	-378.8	193.7	256.9	2844.6	2854.7	6970.2	2844.0
			Min	I	-886.4	-202.0	-106.3	-1508.0	-1553.5	-2137.6	-5260.0
				J	-902.7	-202.0	-106.3	-2854.7	-2844.6	-2844.0	-6970.2
		RC ENV~2	Max	I	-376.9	-4.1	171.9	28.2	23.4	3265.7	-737.5
				J	-389.4	-4.1	178.2	-3.4	80.6	4432.7	-823.2
			Min	I	-637.6	-10.2	18.1	-23.4	-28.2	737.5	-3265.7
				J	-650.1	-10.2	7.6	-80.6	3.4	823.2	-4432.7
245	1	1	SX(RS)	I	2.4	2.9	182.1	44.8	44.8	4907.1	4907.1
				J	2.4	2.9	182.1	63.2	63.2	6119.7	6119.7
			SY(RS)	I	19.9	198.6	52.4	2849.6	2849.6	1041.4	1041.4
				J	19.9	198.6	52.4	4173.3	4173.3	1390.9	1390.9
		RC ENV~1	Max	I	-378.8	194.4	257.4	2844.6	2854.7	6970.2	2844.0
				J	-391.3	194.4	262.7	4140.5	4206.1	8684.7	3554.7
			Min	I	-902.7	-202.7	-106.8	-2854.7	-2844.6	-2844.0	-6970.2
				J	-918.9	-202.7	-106.8	-4206.1	-4140.5	-3554.7	-8684.7
		RC ENV~2	Max	I	-389.4	-4.1	178.2	-3.4	80.6	4432.7	-823.2
				J	-401.9	-4.1	185.1	-31.5	146.8	5641.5	-839.3
			Min	I	-650.1	-10.2	7.6	-80.6	3.4	823.2	-4432.7
				J	-662.6	-10.2	-2.8	-146.8	31.5	839.3	-5641.5
246	1	1	SX(RS)	I	77.7	13.0	180.8	242.4	242.4	1469.6	1469.6
				J	77.7	13.0	180.8	156.6	156.6	388.3	388.3
			SY(RS)	I	52.4	135.7	11.8	1419.4	1419.4	164.4	164.4
				J	52.4	135.7	11.8	581.8	581.8	86.3	86.3
		RC ENV~1	Max	I	-169.7	190.8	161.4	415.5	2423.3	2035.9	903.4
				J	-182.2	190.8	161.4	-54.5	1504.6	897.6	-48.6
			Min	I	-522.8	-80.5	-200.2	-2423.3	-415.5	-903.4	-2035.9
				J	-539.1	-80.5	-200.2	-1504.6	54.5	48.6	-897.6
		RC ENV~2	Max	I	-247.1	83.5	28.1	-780.8	1646.4	1127.9	-106.5
				J	-259.6	83.5	33.3	-509.5	1089.6	656.6	-311.3
			Min	I	-377.3	39.6	-71.2	-1646.4	780.8	106.5	-1127.9
				J	-389.8	39.6	-76.5	-1089.6	509.5	311.3	-656.6
247	1	1	SX(RS)	I	77.7	13.0	183.3	156.6	156.6	388.3	388.3
				J	77.7	13.0	183.3	72.3	72.3	1040.9	1040.9
			SY(RS)	I	52.4	140.7	11.9	581.8	581.8	86.3	86.3
				J	52.4	140.7	11.9	568.8	568.8	15.6	15.6
		RC ENV~1	Max	I	-182.2	195.9	163.9	-54.5	1504.6	897.6	-48.6
				J	-194.7	195.9	163.9	300.0	837.5	1348.5	733.3
			Min	I	-539.1	-85.6	-202.7	-1504.6	54.5	48.6	-897.6
				J	-555.3	-85.6	-202.7	-837.5	-300.0	-733.3	-1348.5
		RC ENV~2	Max	I	-259.6	83.5	33.3	-509.5	1089.6	656.6	-311.3
				J	-272.1	83.5	38.6	-238.2	532.8	587.9	-71.6
			Min	I	-389.8	39.6	-76.5	-1089.6	509.5	311.3	-656.6
				J	-402.3	39.6	-81.7	-532.8	238.2	71.6	-587.9
248	1	1	SX(RS)	I	77.7	13.0	184.9	72.3	72.3	1040.9	1040.9
				J	77.7	13.0	184.9	30.2	30.2	2247.9	2247.9
			SY(RS)	I	52.4	144.2	11.9	568.8	568.8	15.6	15.6
				J	52.4	144.2	11.9	1459.6	1459.6	74.9	74.9
		RC ENV~1	Max	I	-194.7	199.3	165.5	300.0	837.5	1348.5	733.3
				J	-207.2	199.3	165.5	1558.4	1360.8	2426.1	2069.6
			Min	I	-555.3	-89.0	-204.3	-837.5	-300.0	-733.3	-1348.5
				J	-571.6	-89.0	-204.3	-1360.8	-1558.4	-2069.6	-2426.1
		RC ENV~2	Max	I	-272.1	83.5	38.6	-238.2	532.8	587.9	-71.6
				J	-284.6	83.5	43.8	99.3	20.0	827.7	455.6
			Min	I	-402.3	39.6	-81.7	-532.8	238.2	71.6	-587.9
				J	-414.8	39.6	-86.9	-20.0	-99.3	-455.6	-827.7
249	1	1	SX(RS)	I	77.7	13.0	185.8	30.2	30.2	2247.9	2247.9
				J	77.7	13.0	185.8	107.7	107.7	3479.2	3479.2

			SY(RS)	I	52.4	146.1	11.9	1459.6	1459.6	74.9	74.9
				J	52.4	146.1	11.9	2417.6	2417.6	153.7	153.7
			RC ENV~1 Max	I	-207.2	201.2	166.4	1558.4	1360.8	2426.1	2069.6
				J	-219.7	201.2	166.4	2884.0	1951.2	3528.1	3430.3
			Min	I	-571.6	-91.0	-205.2	-1360.8	-1558.4	-2069.6	-2426.1
				J	-587.8	-91.0	-205.2	-1951.2	-2884.0	-3430.3	-3528.1
			RC ENV~2 Max	I	-284.6	83.5	43.8	99.3	20.0	827.7	455.6
				J	-297.1	83.5	49.0	580.8	-250.2	1134.9	1050.3
			Min	I	-414.8	39.6	-86.9	-20.0	-99.3	-455.6	-827.7
				J	-427.3	39.6	-92.1	250.2	-580.8	-1050.3	-1134.9
250	1	1	SX(RS)	I	77.7	13.0	186.2	107.7	107.7	3479.2	3479.2
				J	77.7	13.0	186.2	193.1	193.1	4716.7	4716.7
			SY(RS)	I	52.4	146.9	11.9	2417.6	2417.6	153.7	153.7
				J	52.4	146.9	11.9	3389.7	3389.7	232.8	232.8
			RC ENV~1 Max	I	-219.7	202.0	166.8	2884.0	1951.2	3528.1	3430.3
				J	-232.2	202.0	166.8	4223.7	2555.7	4636.3	4797.2
			Min	I	-587.8	-91.7	-205.6	-1951.2	-2884.0	-3430.3	-3528.1
				J	-604.1	-91.7	-205.6	-2555.7	-4223.7	-4797.2	-4636.3
			RC ENV~2 Max	I	-297.1	83.5	49.0	580.8	-250.2	1134.9	1050.3
				J	-309.6	83.5	54.2	1137.6	-513.9	1479.1	1681.9
			Min	I	-427.3	39.6	-92.1	250.2	-580.8	-1050.3	-1134.9
				J	-439.8	39.6	-97.4	513.9	-1137.6	-1681.9	-1479.1
251	1	1	SX(RS)	I	0.0	0.0	89.0	0.0	0.0	2146.3	2146.3
				J	0.0	0.0	89.0	0.0	0.0	1559.3	1559.3
			SY(RS)	I	130.9	171.6	0.0	3386.2	3386.2	0.4	0.4
				J	130.9	171.6	0.0	2242.0	2242.0	0.3	0.3
			RC ENV~1 Max	I	-207.9	134.0	89.7	4667.8	2104.6	2130.9	2161.7
				J	-220.4	134.0	89.7	3272.3	1211.7	1548.9	1569.7
			Min	I	-621.3	-209.3	-88.2	-2104.6	-4667.8	-2161.7	-2130.9
				J	-637.5	-209.3	-88.2	-1211.7	-3272.3	-1569.7	-1548.9
			RC ENV~2 Max	I	-323.3	-34.2	32.9	2250.8	-1179.0	558.4	687.0
				J	-335.8	-34.2	32.9	1807.2	-950.7	396.0	467.9
			Min	I	-460.0	-66.5	-24.4	1179.0	-2250.8	-687.0	-558.4
				J	-472.5	-66.5	-24.4	950.7	-1807.2	-467.9	-396.0
252	1	1	SX(RS)	I	0.0	0.0	92.8	0.0	0.0	1559.3	1559.3
				J	0.0	0.0	92.8	0.0	0.0	952.6	952.6
			SY(RS)	I	130.9	178.3	0.0	2242.0	2242.0	0.3	0.3
				J	130.9	178.3	0.0	1053.4	1053.4	0.2	0.2
			RC ENV~1 Max	I	-220.4	140.7	93.6	3272.3	1211.7	1548.9	1569.7
				J	-232.9	140.7	93.6	1888.6	274.4	947.2	958.0
			Min	I	-637.5	-216.0	-92.1	-1211.7	-3272.3	-1569.7	-1548.9
				J	-653.8	-216.0	-92.1	-274.4	-1888.6	-958.0	-947.2
			RC ENV~2 Max	I	-335.8	-34.2	32.9	1807.2	-950.7	396.0	467.9
				J	-348.3	-34.2	32.9	1363.6	-722.4	233.6	248.9
			Min	I	-472.5	-66.5	-24.4	950.7	-1807.2	-467.9	-396.0
				J	-485.0	-66.5	-24.4	722.4	-1363.6	-248.9	-233.6
253	1	1	SX(RS)	I	0.0	0.0	96.2	0.0	0.0	952.6	952.6
				J	0.0	0.0	96.2	0.0	0.0	365.3	365.3
			SY(RS)	I	130.9	183.9	0.0	1053.4	1053.4	0.2	0.2
				J	130.9	183.9	0.0	178.6	178.6	0.1	0.1
			RC ENV~1 Max	I	-232.9	146.2	96.9	1888.6	274.4	947.2	958.0
				J	-245.4	146.2	96.9	1274.4	-349.2	364.9	365.8
			Min	I	-653.8	-221.6	-95.4	-274.4	-1888.6	-958.0	-947.2
				J	-670.0	-221.6	-95.4	349.2	-1274.4	-365.8	-364.9
			RC ENV~2 Max	I	-348.3	-34.2	32.9	1363.6	-722.4	233.6	248.9
				J	-360.8	-34.2	32.9	920.0	-494.1	71.3	29.9
			Min	I	-485.0	-66.5	-24.4	722.4	-1363.6	-248.9	-233.6
				J	-497.5	-66.5	-24.4	494.1	-920.0	-29.9	-71.3
254	1	1	SX(RS)	I	0.0	0.0	98.8	0.0	0.0	365.3	365.3
				J	0.0	0.0	98.8	0.0	0.0	438.6	438.6

			SY(RS)	I	130.9	188.2	0.0	178.6	178.6	0.1	0.1
				J	130.9	188.2	0.0	1428.7	1428.7	0.1	0.1
			RC ENV~1 Max	I	-245.4	150.5	99.6	1274.4	-349.2	364.9	365.8
				J	-257.9	150.5	99.6	1705.2	1152.2	443.2	434.1
			Min	I	-670.0	-225.9	-98.1	349.2	-1274.4	-365.8	-364.9
				J	-686.3	-225.9	-98.1	-1152.2	-1705.2	-434.1	-443.2
			RC ENV~2 Max	I	-360.8	-34.2	32.9	920.0	-494.1	71.3	29.9
				J	-373.3	-34.2	32.9	476.4	-265.8	189.1	91.1
			Min	I	-497.5	-66.5	-24.4	494.1	-920.0	-29.9	-71.3
				J	-510.0	-66.5	-24.4	265.8	-476.4	-91.1	-189.1
255	1	1	SX(RS)	I	0.0	0.0	100.8	0.0	0.0	438.6	438.6
				J	0.0	0.0	100.8	0.0	0.0	1070.2	1070.2
			SY(RS)	I	130.9	191.3	0.0	1428.7	1428.7	0.1	0.1
				J	130.9	191.3	0.0	2703.5	2703.5	0.2	0.2
			RC ENV~1 Max	I	-257.9	153.6	101.6	1705.2	1152.2	443.2	434.1
				J	-270.4	153.6	101.6	2728.8	2678.3	1079.8	1060.6
			Min	I	-686.3	-229.0	-100.1	-1152.2	-1705.2	-434.1	-443.2
				J	-702.5	-229.0	-100.1	-2678.3	-2728.8	-1060.6	-1079.8
			RC ENV~2 Max	I	-373.3	-34.2	32.9	476.4	-265.8	189.1	91.1
				J	-385.8	-34.2	32.9	45.7	-24.4	408.1	253.5
			Min	I	-510.0	-66.5	-24.4	265.8	-476.4	-91.1	-189.1
				J	-522.5	-66.5	-24.4	24.4	-45.7	-253.5	-408.1
256	1	1	SX(RS)	I	0.0	0.0	102.1	0.0	0.0	1070.2	1070.2
				J	0.0	0.0	102.1	0.0	0.0	1740.5	1740.5
			SY(RS)	I	130.9	193.2	0.0	2703.5	2703.5	0.2	0.2
				J	130.9	193.2	0.0	3991.5	3991.5	0.3	0.3
			RC ENV~1 Max	I	-270.4	155.5	102.8	2728.8	2678.3	1079.8	1060.6
				J	-282.9	155.5	102.8	3765.5	4217.5	1755.1	1726.0
			Min	I	-702.5	-230.9	-101.3	-2678.3	-2728.8	-1060.6	-1079.8
				J	-718.8	-230.9	-101.3	-4217.5	-3765.5	-1726.0	-1755.1
			RC ENV~2 Max	I	-385.8	-34.2	32.9	45.7	-24.4	408.1	253.5
				J	-398.3	-34.2	32.9	-184.8	410.8	627.1	415.9
			Min	I	-522.5	-66.5	-24.4	24.4	-45.7	-253.5	-408.1
				J	-535.0	-66.5	-24.4	-410.8	184.8	-415.9	-627.1
257	1	1	SX(RS)	I	0.0	0.0	102.8	0.0	0.0	1740.5	1740.5
				J	0.0	0.0	102.8	0.0	0.0	2421.0	2421.0
			SY(RS)	I	130.9	194.2	0.0	3991.5	3991.5	0.3	0.3
				J	130.9	194.2	0.0	5286.2	5286.2	0.5	0.5
			RC ENV~1 Max	I	-282.9	156.5	103.5	3765.5	4217.5	1755.1	1726.0
				J	-295.4	156.5	103.5	4809.0	5763.5	2440.6	2401.4
			Min	I	-718.8	-231.9	-102.0	-4217.5	-3765.5	-1726.0	-1755.1
				J	-735.0	-231.9	-102.0	-5763.5	-4809.0	-2401.4	-2440.6
			RC ENV~2 Max	I	-398.3	-34.2	32.9	-184.8	410.8	627.1	415.9
				J	-410.8	-34.2	32.9	-415.4	854.4	846.1	578.3
			Min	I	-535.0	-66.5	-24.4	-410.8	184.8	-415.9	-627.1
				J	-547.5	-66.5	-24.4	-854.4	415.4	-578.3	-846.1
258	1	1	SX(RS)	I	0.0	0.0	103.0	0.0	0.0	2421.0	2421.0
				J	0.0	0.0	103.0	0.0	0.0	3105.1	3105.1
			SY(RS)	I	130.9	194.6	0.0	5286.2	5286.2	0.5	0.5
				J	130.9	194.6	0.0	6583.3	6583.3	0.6	0.6
			RC ENV~1 Max	I	-295.4	156.9	103.8	4809.0	5763.5	2440.6	2401.4
				J	-307.9	156.9	103.8	5854.7	7311.8	3129.7	3080.5
			Min	I	-735.0	-232.2	-102.3	-5763.5	-4809.0	-2401.4	-2440.6
				J	-751.3	-232.2	-102.3	-7311.8	-5854.7	-3080.5	-3129.7
			RC ENV~2 Max	I	-410.8	-34.2	32.9	-415.4	854.4	846.1	578.3
				J	-423.3	-34.2	32.9	-645.9	1298.0	1065.1	740.7
			Min	I	-547.5	-66.5	-24.4	-854.4	415.4	-578.3	-846.1
				J	-560.0	-66.5	-24.4	-1298.0	645.9	-740.7	-1065.1
259	1	1	SX(RS)	I	0.0	0.0	159.5	0.0	0.0	1187.2	1187.2

				J	0.0	0.0	159.5	0.0	0.0	126.4	126.4
			SY(RS)	I	47.4	232.6	0.0	5399.6	5399.6	0.2	0.2
				J	47.4	232.6	0.0	3848.8	3848.8	0.1	0.1
			RC ENV~1 Max	I	-481.4	236.4	160.3	5221.1	5578.2	1189.3	1185.1
				J	-493.9	236.4	160.3	3695.1	4002.4	134.1	118.6
			Min	I	-1237.6	-228.9	-158.6	-5578.2	-5221.1	-1185.1	-1189.3
				J	-1253.8	-228.9	-158.6	-4002.4	-3695.1	-118.6	-134.1
			RC ENV~2 Max	I	-501.7	9.2	30.4	-176.4	355.1	189.3	177.9
				J	-514.2	9.2	30.4	-151.8	293.6	25.2	-3.4
			Min	I	-895.6	3.7	-27.9	-355.1	176.4	-177.9	-189.3
				J	-908.1	3.7	-27.9	-293.6	151.8	3.4	-25.2
260	1	1	SX(RS)	I	0.0	0.0	166.2	0.0	0.0	126.4	126.4
				J	0.0	0.0	166.2	0.0	0.0	984.7	984.7
			SY(RS)	I	47.4	239.8	0.0	3848.8	3848.8	0.1	0.1
				J	47.4	239.8	0.0	2250.1	2250.1	0.0	0.0
			RC ENV~1 Max	I	-493.9	243.6	167.1	3695.1	4002.4	134.1	118.6
				J	-506.4	243.6	167.1	2121.4	2378.7	998.1	971.2
			Min	I	-1253.8	-236.1	-165.4	-4002.4	-3695.1	-118.6	-134.1
				J	-1270.1	-236.1	-165.4	-2378.7	-2121.4	-971.2	-998.1
			RC ENV~2 Max	I	-514.2	9.2	30.4	-151.8	293.6	25.2	-3.4
				J	-526.7	9.2	30.4	-127.2	232.2	227.3	182.4
			Min	I	-908.1	3.7	-27.9	-293.6	151.8	3.4	-25.2
				J	-920.6	3.7	-27.9	-232.2	127.2	-182.4	-227.3
261	1	1	SX(RS)	I	0.0	0.0	171.5	0.0	0.0	984.7	984.7
				J	0.0	0.0	171.5	0.0	0.0	2128.0	2128.0
			SY(RS)	I	47.4	245.9	0.0	2250.1	2250.1	0.0	0.0
				J	47.4	245.9	0.0	611.3	611.3	0.0	0.0
			RC ENV~1 Max	I	-539.8	249.6	172.4	2121.4	2378.7	998.1	971.2
				J	-552.3	249.6	172.4	507.6	715.0	2147.1	2108.9
			Min	I	-1386.7	-242.1	-170.7	-2378.7	-2121.4	-971.2	-998.1
				J	-1403.0	-242.1	-170.7	-715.0	-507.6	-2108.9	-2147.1
			RC ENV~2 Max	I	-581.8	9.2	30.4	-127.2	232.2	227.3	182.4
				J	-594.3	9.2	30.4	-94.9	170.8	429.9	368.2
			Min	I	-998.4	3.7	-27.9	-232.2	127.2	-182.4	-227.3
				J	-1010.9	3.7	-27.9	-170.8	94.9	-368.2	-429.9
262	1	1	SX(RS)	I	0.0	0.0	175.5	0.0	0.0	2128.0	2128.0
				J	0.0	0.0	175.5	0.0	0.0	3298.2	3298.2
			SY(RS)	I	47.4	250.6	0.0	611.3	611.3	0.0	0.0
				J	47.4	250.6	0.0	1060.0	1060.0	0.1	0.1
			RC ENV~1 Max	I	-552.3	254.4	176.4	507.6	715.0	2147.1	2108.9
				J	-564.8	254.4	176.4	981.2	1138.7	3322.9	3273.4
			Min	I	-1403.0	-246.9	-174.7	-715.0	-507.6	-2108.9	-2147.1
				J	-1419.2	-246.9	-174.7	-1138.7	-981.2	-3273.4	-3322.9
			RC ENV~2 Max	I	-594.3	9.2	30.4	-94.9	170.8	429.9	368.2
				J	-606.8	9.2	30.4	-46.1	109.4	632.6	554.1
			Min	I	-1010.9	3.7	-27.9	-170.8	94.9	-368.2	-429.9
				J	-1023.4	3.7	-27.9	-109.4	46.1	-554.1	-632.6
263	1	1	SX(RS)	I	0.0	0.0	178.3	0.0	0.0	3298.2	3298.2
				J	0.0	0.0	178.3	0.0	0.0	4486.8	4486.8
			SY(RS)	I	47.4	254.1	0.0	1060.0	1060.0	0.1	0.1
				J	47.4	254.1	0.0	2753.5	2753.5	0.2	0.2
			RC ENV~1 Max	I	-564.8	257.8	179.2	981.2	1138.7	3322.9	3273.4
				J	-577.3	257.8	179.2	2699.7	2807.3	4517.3	4456.4
			Min	I	-1419.2	-250.3	-177.5	-1138.7	-981.2	-3273.4	-3322.9
				J	-1435.5	-250.3	-177.5	-2807.3	-2699.7	-4456.4	-4517.3
			RC ENV~2 Max	I	-606.8	9.2	30.4	-46.1	109.4	632.6	554.1
				J	-619.3	9.2	30.4	2.9	59.1	835.2	739.9
			Min	I	-1023.4	3.7	-27.9	-109.4	46.1	-554.1	-632.6
				J	-1035.9	3.7	-27.9	-59.1	-2.9	-739.9	-835.2

264	1	1	SX(RS)	I	0.0	0.0	180.0	0.0	0.0	4486.8	4486.8
				J	0.0	0.0	180.0	0.0	0.0	5686.8	5686.8
			SY(RS)	I	47.4	256.2	0.0	2753.5	2753.5	0.2	0.2
				J	47.4	256.2	0.0	4461.7	4461.7	0.3	0.3
			RC ENV~1 Max	I	-577.3	260.0	180.9	2699.7	2807.3	4517.3	4456.4
				J	-589.8	260.0	180.9	4432.9	4490.5	5722.9	5650.7
			Min	I	-1435.5	-252.5	-179.2	-2807.3	-2699.7	-4456.4	-4517.3
				J	-1451.7	-252.5	-179.2	-4490.5	-4432.9	-5650.7	-5722.9
			RC ENV~2 Max	I	-619.3	9.2	30.4	2.9	59.1	835.2	739.9
				J	-631.8	9.2	30.4	51.9	29.6	1037.8	925.8
			Min	I	-1035.9	3.7	-27.9	-59.1	-2.9	-739.9	-835.2
				J	-1048.4	3.7	-27.9	-29.6	-51.9	-925.8	-1037.8
265	1	1	SX(RS)	I	0.0	0.0	180.8	0.0	0.0	5686.8	5686.8
				J	0.0	0.0	180.8	0.0	0.0	6892.4	6892.4
			SY(RS)	I	47.4	257.4	0.0	4461.7	4461.7	0.3	0.3
				J	47.4	257.4	0.0	6177.3	6177.3	0.3	0.3
			RC ENV~1 Max	I	-589.8	261.1	181.7	4432.9	4490.5	5722.9	5650.7
				J	-602.3	261.1	181.7	6173.5	6181.2	6934.1	6850.6
			Min	I	-1451.7	-253.6	-180.0	-4490.5	-4432.9	-5650.7	-5722.9
				J	-1468.0	-253.6	-180.0	-6181.2	-6173.5	-6850.6	-6934.1
			RC ENV~2 Max	I	-631.8	9.2	30.4	51.9	29.6	1037.8	925.8
				J	-644.3	9.2	30.4	111.0	4.0	1240.4	1111.6
			Min	I	-1048.4	3.7	-27.9	-29.6	-51.9	-925.8	-1037.8
				J	-1060.9	3.7	-27.9	-4.0	-111.0	-1111.6	-1240.4
266	1	1	SX(RS)	I	0.0	0.0	181.1	0.0	0.0	6892.4	6892.4
				J	0.0	0.0	181.1	0.0	0.0	8099.7	8099.7
			SY(RS)	I	47.4	257.7	0.0	6177.3	6177.3	0.3	0.3
				J	47.4	257.7	0.0	7895.4	7895.4	0.4	0.4
			RC ENV~1 Max	I	-602.3	261.5	182.0	6173.5	6181.2	6934.1	6850.6
				J	-614.8	261.5	182.0	7916.6	7874.3	8147.1	8052.3
			Min	I	-1468.0	-254.0	-180.3	-6181.2	-6173.5	-6850.6	-6934.1
				J	-1484.2	-254.0	-180.3	-7874.3	-7916.6	-8052.3	-8147.1
			RC ENV~2 Max	I	-644.3	9.2	30.4	111.0	4.0	1240.4	1111.6
				J	-656.8	9.2	30.4	172.5	-20.6	1443.0	1297.5
			Min	I	-1060.9	3.7	-27.9	-4.0	-111.0	-1111.6	-1240.4
				J	-1073.4	3.7	-27.9	20.6	-172.5	-1297.5	-1443.0
267	1	1	SX(RS)	I	0.0	0.0	159.5	0.0	0.0	1187.0	1187.0
				J	0.0	0.0	159.5	0.0	0.0	126.0	126.0
			SY(RS)	I	47.4	232.6	0.0	5399.6	5399.6	0.2	0.2
				J	47.4	232.6	0.0	3848.8	3848.8	0.1	0.1
			RC ENV~1 Max	I	-474.5	225.4	159.4	5643.9	5155.4	1188.6	1185.4
				J	-487.0	225.4	159.4	4044.6	3652.9	126.9	125.1
			Min	I	-1232.9	-239.9	-159.6	-5155.4	-5643.9	-1185.4	-1188.6
				J	-1249.1	-239.9	-159.6	-3652.9	-4044.6	-125.1	-126.9
			RC ENV~2 Max	I	-497.4	-7.2	28.9	393.0	-242.1	183.9	183.3
				J	-509.9	-7.2	28.9	318.2	-194.0	9.5	11.8
			Min	I	-891.3	-11.2	-29.4	242.1	-393.0	-183.3	-183.9
				J	-903.8	-11.2	-29.4	194.0	-318.2	-11.8	-9.5
268	1	1	SX(RS)	I	0.0	0.0	166.2	0.0	0.0	126.0	126.0
				J	0.0	0.0	166.2	0.0	0.0	984.7	984.7
			SY(RS)	I	47.4	239.8	0.0	3848.8	3848.8	0.1	0.1
				J	47.4	239.8	0.0	2250.1	2250.1	0.0	0.0
			RC ENV~1 Max	I	-487.0	232.6	166.1	4044.6	3652.9	126.9	125.1
				J	-499.5	232.6	166.1	2397.5	2102.6	984.8	984.5
			Min	I	-1249.1	-247.1	-166.3	-3652.9	-4044.6	-125.1	-126.9
				J	-1265.4	-247.1	-166.3	-2102.6	-2397.5	-984.5	-984.8
			RC ENV~2 Max	I	-509.9	-7.2	28.9	318.2	-194.0	9.5	11.8
				J	-522.4	-7.2	28.9	243.4	-143.7	202.2	207.5
			Min	I	-903.8	-11.2	-29.4	194.0	-318.2	-11.8	-9.5
				J	-916.3	-11.2	-29.4	143.7	-243.4	-207.5	-202.2

269	1	1	SX(RS)	I	0.0	0.0	171.5	0.0	0.0	984.7	984.7
				J	0.0	0.0	171.5	0.0	0.0	2128.0	2128.0
			SY(RS)	I	47.4	245.9	0.0	2250.1	2250.1	0.0	0.0
				J	47.4	245.9	0.0	611.3	611.3	0.0	0.0
			RC ENV~1 Max	I	-532.8	238.6	171.4	2397.5	2102.6	984.8	984.5
				J	-545.3	238.6	171.4	710.4	512.2	2127.4	2128.6
			Min	I	-1382.1	-253.1	-171.6	-2102.6	-2397.5	-984.5	-984.8
				J	-1398.3	-253.1	-171.6	-512.2	-710.4	-2128.6	-2127.4
			RC ENV~2 Max	I	-574.8	-7.2	28.9	243.4	-143.7	202.2	207.5
				J	-587.3	-7.2	28.9	168.6	-92.8	394.9	403.3
			Min	I	-994.0	-11.2	-29.4	143.7	-243.4	-207.5	-202.2
				J	-1006.5	-11.2	-29.4	92.8	-168.6	-403.3	-394.9
270	1	1	SX(RS)	I	0.0	0.0	175.5	0.0	0.0	2128.0	2128.0
				J	0.0	0.0	175.5	0.0	0.0	3298.1	3298.1
			SY(RS)	I	47.4	250.6	0.0	611.3	611.3	0.0	0.0
				J	47.4	250.6	0.0	1060.0	1060.0	0.1	0.1
			RC ENV~1 Max	I	-545.3	243.4	175.4	710.4	512.2	2127.4	2128.6
				J	-557.8	243.4	175.4	1110.7	1009.3	3296.8	3299.4
			Min	I	-1398.3	-257.9	-175.6	-512.2	-710.4	-2128.6	-2127.4
				J	-1414.6	-257.9	-175.6	-1009.3	-1110.7	-3299.4	-3296.8
			RC ENV~2 Max	I	-587.3	-7.2	28.9	168.6	-92.8	394.9	403.3
				J	-599.8	-7.2	28.9	93.8	-39.9	587.7	599.0
			Min	I	-1006.5	-11.2	-29.4	92.8	-168.6	-403.3	-394.9
				J	-1019.0	-11.2	-29.4	39.9	-93.8	-599.0	-587.7
271	1	1	SX(RS)	I	0.0	0.0	178.3	0.0	0.0	3298.1	3298.1
				J	0.0	0.0	178.3	0.0	0.0	4486.7	4486.7
			SY(RS)	I	47.4	254.1	0.0	1060.0	1060.0	0.1	0.1
				J	47.4	254.1	0.0	2753.5	2753.5	0.2	0.2
			RC ENV~1 Max	I	-557.8	246.8	178.2	1110.7	1009.3	3296.8	3299.4
				J	-570.3	246.8	178.2	2755.8	2751.2	4484.7	4488.7
			Min	I	-1414.6	-261.3	-178.4	-1009.3	-1110.7	-3299.4	-3296.8
				J	-1430.8	-261.3	-178.4	-2751.2	-2755.8	-4488.7	-4484.7
			RC ENV~2 Max	I	-599.8	-7.2	28.9	93.8	-39.9	587.7	599.0
				J	-612.3	-7.2	28.9	19.1	15.0	780.4	794.7
			Min	I	-1019.0	-11.2	-29.4	39.9	-93.8	-599.0	-587.7
				J	-1031.5	-11.2	-29.4	-15.0	-19.1	-794.7	-780.4
272	1	1	SX(RS)	I	0.0	0.0	180.0	0.0	0.0	4486.7	4486.7
				J	0.0	0.0	180.0	0.0	0.0	5686.6	5686.6
			SY(RS)	I	47.4	256.2	0.0	2753.5	2753.5	0.2	0.2
				J	47.4	256.2	0.0	4461.7	4461.7	0.3	0.3
			RC ENV~1 Max	I	-570.3	249.0	179.9	2755.8	2751.2	4484.7	4488.7
				J	-582.8	249.0	179.9	4415.6	4507.8	5683.8	5689.3
			Min	I	-1430.8	-263.5	-180.1	-2751.2	-2755.8	-4488.7	-4484.7
				J	-1447.1	-263.5	-180.1	-4507.8	-4415.6	-5689.3	-5683.8
			RC ENV~2 Max	I	-612.3	-7.2	28.9	19.1	15.0	780.4	794.7
				J	-624.8	-7.2	28.9	-45.3	69.8	973.1	990.4
			Min	I	-1031.5	-11.2	-29.4	-15.0	-19.1	-794.7	-780.4
				J	-1044.0	-11.2	-29.4	-69.8	45.3	-990.4	-973.1
273	1	1	SX(RS)	I	0.0	0.0	180.8	0.0	0.0	5686.6	5686.6
				J	0.0	0.0	180.8	0.0	0.0	6892.1	6892.1
			SY(RS)	I	47.4	257.4	0.0	4461.7	4461.7	0.3	0.3
				J	47.4	257.4	0.0	6177.3	6177.3	0.3	0.3
			RC ENV~1 Max	I	-582.8	250.1	180.7	4415.6	4507.8	5683.8	5689.3
				J	-595.3	250.1	180.7	6082.9	6271.8	6888.6	6895.6
			Min	I	-1447.1	-264.6	-180.9	-4507.8	-4415.6	-5689.3	-5683.8
				J	-1463.3	-264.6	-180.9	-6271.8	-6082.9	-6895.6	-6888.6
			RC ENV~2 Max	I	-624.8	-7.2	28.9	-45.3	69.8	973.1	990.4
				J	-637.3	-7.2	28.9	-94.3	134.7	1165.9	1186.2
			Min	I	-1044.0	-11.2	-29.4	-69.8	45.3	-990.4	-973.1

				J	-1056.5	-11.2	-29.4	-134.7	94.3	-1186.2	-1165.9
274	1	1	SX(RS)	I	0.0	0.0	181.1	0.0	0.0	6892.1	6892.1
				J	0.0	0.0	181.1	0.0	0.0	8099.3	8099.3
			SY(RS)	I	47.4	257.7	0.0	6177.3	6177.3	0.3	0.3
				J	47.4	257.7	0.0	7895.4	7895.4	0.4	0.4
			RC ENV~1 Max	I	-595.3	250.5	181.0	6082.9	6271.8	6888.6	6895.6
				J	-607.8	250.5	181.0	7752.6	8038.3	8095.1	8103.5
			Min	I	-1463.3	-265.0	-181.2	-6271.8	-6082.9	-6895.6	-6888.6
				J	-1479.6	-265.0	-181.2	-8038.3	-7752.6	-8103.5	-8095.1
			RC ENV~2 Max	I	-637.3	-7.2	28.9	-94.3	134.7	1165.9	1186.2
				J	-649.8	-7.2	28.9	-142.3	205.3	1358.6	1381.9
			Min	I	-1056.5	-11.2	-29.4	-134.7	94.3	-1186.2	-1165.9
				J	-1069.0	-11.2	-29.4	-205.3	142.3	-1381.9	-1358.6
275	1	1	SX(RS)	I	0.0	0.0	89.4	0.0	0.0	2159.5	2159.5
				J	0.0	0.0	89.4	0.0	0.0	1569.3	1569.3
			SY(RS)	I	130.9	171.6	0.0	3386.2	3386.2	0.4	0.4
				J	130.9	171.6	0.0	2242.0	2242.0	0.3	0.3
			RC ENV~1 Max	I	-209.9	213.0	89.3	2057.5	4715.0	2162.5	2156.4
				J	-222.4	213.0	89.3	1189.1	3294.9	1571.3	1567.4
			Min	I	-633.9	-130.3	-89.6	-4715.0	-2057.5	-2156.4	-2162.5
				J	-650.2	-130.3	-89.6	-3294.9	-1189.1	-1567.4	-1571.3
			RC ENV~2 Max	I	-334.1	69.2	28.2	-1210.0	2281.9	629.8	615.6
				J	-346.6	69.2	28.2	-964.0	1820.5	436.6	427.4
			Min	I	-468.1	36.5	-29.0	-2281.9	1210.0	-615.6	-629.8
				J	-480.6	36.5	-29.0	-1820.5	964.0	-427.4	-436.6
276	1	1	SX(RS)	I	0.0	0.0	93.4	0.0	0.0	1569.3	1569.3
				J	0.0	0.0	93.4	0.0	0.0	959.2	959.2
			SY(RS)	I	130.9	178.3	0.0	2242.0	2242.0	0.3	0.3
				J	130.9	178.3	0.0	1053.4	1053.4	0.2	0.2
			RC ENV~1 Max	I	-222.4	219.7	93.2	1189.1	3294.9	1571.3	1567.4
				J	-234.9	219.7	93.2	276.4	1882.1	960.1	958.3
			Min	I	-650.2	-137.0	-93.5	-3294.9	-1189.1	-1567.4	-1571.3
				J	-666.4	-137.0	-93.5	-1882.1	-276.4	-958.3	-960.1
			RC ENV~2 Max	I	-346.6	69.2	28.2	-964.0	1820.5	436.6	427.4
				J	-359.1	69.2	28.2	-718.0	1359.2	243.4	239.2
			Min	I	-480.6	36.5	-29.0	-1820.5	964.0	-427.4	-436.6
				J	-493.1	36.5	-29.0	-1359.2	718.0	-239.2	-243.4
277	1	1	SX(RS)	I	0.0	0.0	96.7	0.0	0.0	959.2	959.2
				J	0.0	0.0	96.7	0.0	0.0	368.0	368.0
			SY(RS)	I	130.9	183.9	0.0	1053.4	1053.4	0.2	0.2
				J	130.9	183.9	0.0	178.6	178.6	0.1	0.1
			RC ENV~1 Max	I	-268.3	225.3	96.6	276.4	1882.1	960.1	958.3
				J	-280.8	225.3	96.6	-322.5	1247.2	367.8	368.2
			Min	I	-783.1	-142.5	-96.9	-1882.1	-276.4	-958.3	-960.1
				J	-799.4	-142.5	-96.9	-1247.2	322.5	-368.2	-367.8
			RC ENV~2 Max	I	-398.0	69.2	28.2	-718.0	1359.2	243.4	239.2
				J	-410.5	69.2	28.2	-472.0	897.9	50.3	50.9
			Min	I	-570.9	36.5	-29.0	-1359.2	718.0	-239.2	-243.4
				J	-583.4	36.5	-29.0	-897.9	472.0	-50.9	-50.3
278	1	1	SX(RS)	I	0.0	0.0	99.4	0.0	0.0	368.0	368.0
				J	0.0	0.0	99.4	0.0	0.0	439.4	439.4
			SY(RS)	I	130.9	188.2	0.0	178.6	178.6	0.1	0.1
				J	130.9	188.2	0.0	1428.7	1428.7	0.1	0.1
			RC ENV~1 Max	I	-280.8	229.6	99.2	-322.5	1247.2	367.8	368.2
				J	-293.3	229.6	99.2	1203.4	1654.0	438.2	440.7
			Min	I	-799.4	-146.8	-99.6	-1247.2	322.5	-368.2	-367.8
				J	-815.6	-146.8	-99.6	-1654.0	-1203.4	-440.7	-438.2
			RC ENV~2 Max	I	-410.5	69.2	28.2	-472.0	897.9	50.3	50.9
				J	-423.0	69.2	28.2	-222.1	436.6	137.3	142.9

			Min	I	-583.4	36.5	-29.0	-897.9	472.0	-50.9	-50.3
				J	-595.9	36.5	-29.0	-436.6	222.1	-142.9	-137.3
279	1	1	SX(RS)	I	0.0	0.0	101.4	0.0	0.0	439.4	439.4
				J	0.0	0.0	101.4	0.0	0.0	1074.8	1074.8
			SY(RS)	I	130.9	191.3	0.0	1428.7	1428.7	0.1	0.1
				J	130.9	191.3	0.0	2703.5	2703.5	0.2	0.2
			RC ENV~1 Max	I	-293.3	232.6	101.2	1203.4	1654.0	438.2	440.7
				J	-305.8	232.6	101.2	2754.1	2653.0	1072.4	1077.1
			Min	I	-815.6	-149.9	-101.6	-1654.0	-1203.4	-440.7	-438.2
				J	-831.9	-149.9	-101.6	-2653.0	-2754.1	-1077.1	-1072.4
			RC ENV~2 Max	I	-423.0	69.2	28.2	-222.1	436.6	137.3	142.9
				J	-435.5	69.2	28.2	51.4	1.9	325.5	336.1
			Min	I	-595.9	36.5	-29.0	-436.6	222.1	-142.9	-137.3
				J	-608.4	36.5	-29.0	-1.9	-51.4	-336.1	-325.5
280	1	1	SX(RS)	I	0.0	0.0	102.7	0.0	0.0	1074.8	1074.8
				J	0.0	0.0	102.7	0.0	0.0	1749.1	1749.1
			SY(RS)	I	130.9	193.2	0.0	2703.5	2703.5	0.2	0.2
				J	130.9	193.2	0.0	3991.5	3991.5	0.3	0.3
			RC ENV~1 Max	I	-305.8	234.6	102.5	2754.1	2653.0	1072.4	1077.1
				J	-318.3	234.6	102.5	4317.9	3665.1	1745.7	1752.6
			Min	I	-831.9	-151.8	-102.8	-2653.0	-2754.1	-1077.1	-1072.4
				J	-848.1	-151.8	-102.8	-3665.1	-4317.9	-1752.6	-1745.7
			RC ENV~2 Max	I	-435.5	69.2	28.2	51.4	1.9	325.5	336.1
				J	-448.0	69.2	28.2	486.0	-241.2	513.7	529.3
			Min	I	-608.4	36.5	-29.0	-1.9	-51.4	-336.1	-325.5
				J	-620.9	36.5	-29.0	241.2	-486.0	-529.3	-513.7
281	1	1	SX(RS)	I	0.0	0.0	103.4	0.0	0.0	1749.1	1749.1
				J	0.0	0.0	103.4	0.0	0.0	2433.6	2433.6
			SY(RS)	I	130.9	194.2	0.0	3991.5	3991.5	0.3	0.3
				J	130.9	194.2	0.0	5286.2	5286.2	0.5	0.5
			RC ENV~1 Max	I	-318.3	235.6	103.2	4317.9	3665.1	1745.7	1752.6
				J	-330.8	235.6	103.2	5888.5	4684.0	2429.1	2438.1
			Min	I	-848.1	-152.8	-103.5	-3665.1	-4317.9	-1752.6	-1745.7
				J	-864.4	-152.8	-103.5	-4684.0	-5888.5	-2438.1	-2429.1
			RC ENV~2 Max	I	-448.0	69.2	28.2	486.0	-241.2	513.7	529.3
				J	-460.5	69.2	28.2	947.3	-484.3	701.9	722.4
			Min	I	-620.9	36.5	-29.0	241.2	-486.0	-529.3	-513.7
				J	-633.4	36.5	-29.0	484.3	-947.3	-722.4	-701.9
282	1	1	SX(RS)	I	0.0	0.0	103.6	0.0	0.0	2433.6	2433.6
				J	0.0	0.0	103.6	0.0	0.0	3121.8	3121.8
			SY(RS)	I	130.9	194.6	0.0	5286.2	5286.2	0.5	0.5
				J	130.9	194.6	0.0	6583.2	6583.2	0.6	0.6
			RC ENV~1 Max	I	-330.8	235.9	103.5	5888.5	4684.0	2429.1	2438.1
				J	-343.3	235.9	103.5	7461.4	5705.1	3116.2	3127.4
			Min	I	-864.4	-153.2	-103.8	-4684.0	-5888.5	-2438.1	-2429.1
				J	-880.6	-153.2	-103.8	-5705.1	-7461.4	-3127.4	-3116.2
			RC ENV~2 Max	I	-460.5	69.2	28.2	947.3	-484.3	701.9	722.4
				J	-473.0	69.2	28.2	1408.6	-727.3	890.2	915.6
			Min	I	-633.4	36.5	-29.0	484.3	-947.3	-722.4	-701.9
				J	-645.9	36.5	-29.0	727.3	-1408.6	-915.6	-890.2
283	1	2	SX(RS)	I	102.1	63.4	74.5	1124.9	1124.9	2540.9	2540.9
				J	102.1	63.4	74.5	1116.0	1116.0	2009.7	2009.7
			SY(RS)	I	27.6	108.7	2.1	1906.7	1906.7	41.7	41.7
				J	27.6	108.7	2.1	1129.3	1129.3	27.9	27.9
			RC ENV~1 Max	I	30.8	95.4	23.3	2608.7	1204.7	2361.7	2720.1
				J	35.0	95.4	42.7	1879.9	523.4	1529.9	2489.5
			Min	I	-176.3	-122.0	-125.7	-1204.7	-2608.7	-2720.1	-2361.7
				J	-170.9	-122.0	-106.3	-523.4	-1879.9	-2489.5	-1529.9
			RC ENV~2 Max	I	-70.4	4.3	-29.4	1604.7	-275.5	670.2	919.1

				J	-66.2	4.3	-10.1	1335.8	-306.7	174.7	1062.0
			Min	I	-126.6	-37.2	-78.1	275.5	-1604.7	-919.1	-670.2
				J	-122.4	-37.2	-58.8	306.7	-1335.8	-1062.0	-174.7
284	1	2	SX(RS)	I	100.3	63.1	75.9	1116.0	1116.0	2009.7	2009.7
				J	100.3	63.1	75.9	1275.3	1275.3	1473.3	1473.3
			SY(RS)	I	27.6	107.0	2.1	1129.3	1129.3	27.9	27.9
				J	27.6	107.0	2.1	383.4	383.4	15.9	15.9
			RC ENV~1 Max	I	33.2	93.7	44.0	1879.9	523.4	1529.9	2489.5
				J	37.3	93.7	63.4	1785.2	765.5	833.2	2113.4
			Min	I	-170.9	-120.2	-107.7	-523.4	-1879.9	-2489.5	-1529.9
				J	-165.5	-120.2	-88.3	-765.5	-1785.2	-2113.4	-833.2
			RC ENV~2 Max	I	-66.2	4.3	-10.1	1335.8	-306.7	174.7	1062.0
				J	-62.0	4.3	9.3	1066.8	-337.8	-180.6	1064.6
			Min	I	-122.4	-37.2	-58.8	306.7	-1335.8	-1062.0	-174.7
				J	-118.3	-37.2	-39.4	337.8	-1066.8	-1064.6	180.6
285	1	2	SX(RS)	I	98.5	62.6	77.3	1275.3	1275.3	1473.3	1473.3
				J	98.5	62.6	77.3	1547.8	1547.8	940.0	940.0
			SY(RS)	I	27.6	104.2	2.1	383.4	383.4	15.9	15.9
				J	27.6	104.2	2.1	437.7	437.7	13.5	13.5
			RC ENV~1 Max	I	35.6	91.0	64.8	1785.2	765.5	833.2	2113.4
				J	39.7	91.0	84.2	1961.5	1134.0	279.8	1600.2
			Min	I	-165.5	-117.5	-89.7	-765.5	-1785.2	-2113.4	-833.2
				J	-160.1	-117.5	-70.4	-1134.0	-1961.5	-1600.2	-279.8
			RC ENV~2 Max	I	-62.0	4.3	9.3	1066.8	-337.8	-180.6	1064.6
				J	-57.9	4.3	28.7	797.8	-369.0	-395.7	927.0
			Min	I	-118.3	-37.2	-39.4	337.8	-1066.8	-1064.6	180.6
				J	-114.1	-37.2	-20.0	369.0	-797.8	-927.0	395.7
286	1	2	SX(RS)	I	96.9	62.1	78.7	1547.8	1547.8	940.0	940.0
				J	96.9	62.1	78.7	1881.2	1881.2	460.8	460.8
			SY(RS)	I	27.6	100.3	2.1	437.7	437.7	13.5	13.5
				J	27.6	100.3	2.1	1140.9	1140.9	24.1	24.1
			RC ENV~1 Max	I	38.1	87.1	85.6	1961.5	1134.0	279.8	1600.2
				J	42.3	87.1	105.0	2198.9	1563.6	-79.2	1000.9
			Min	I	-160.1	-113.6	-71.8	-1134.0	-1961.5	-1600.2	-279.8
				J	-154.6	-113.6	-52.4	-1563.6	-2198.9	-1000.9	79.2
			RC ENV~2 Max	I	-57.9	4.3	28.7	797.8	-369.0	-395.7	927.0
				J	-53.7	4.3	48.1	632.6	-227.2	-470.5	649.2
			Min	I	-114.1	-37.2	-20.0	369.0	-797.8	-927.0	395.7
				J	-109.9	-37.2	-0.6	227.2	-632.6	-649.2	470.5
287	1	2	SX(RS)	I	95.4	61.4	80.1	1881.2	1881.2	460.8	460.8
				J	95.4	61.4	80.1	2245.8	2245.8	437.8	437.8
			SY(RS)	I	27.6	95.1	2.1	1140.9	1140.9	24.1	24.1
				J	27.6	95.1	2.1	1821.9	1821.9	38.1	38.1
			RC ENV~1 Max	I	40.7	81.9	106.4	2198.9	1563.6	-79.2	1000.9
				J	44.9	81.9	125.8	2467.4	2024.2	158.2	717.5
			Min	I	-154.6	-108.4	-53.8	-1563.6	-2198.9	-1000.9	79.2
				J	-149.2	-108.4	-34.4	-2024.2	-2467.4	-717.5	-158.2
			RC ENV~2 Max	I	-53.7	4.3	48.1	632.6	-227.2	-470.5	649.2
				J	-49.5	4.3	67.4	513.2	-12.5	-226.4	409.7
			Min	I	-109.9	-37.2	-0.6	227.2	-632.6	-649.2	470.5
				J	-105.8	-37.2	18.7	12.5	-513.2	-409.7	226.4
288	1	2	SX(RS)	I	94.0	60.8	81.5	2245.8	2245.8	437.8	437.8
				J	94.0	60.8	81.5	2626.7	2626.7	925.6	925.6
			SY(RS)	I	27.6	88.7	2.1	1821.9	1821.9	38.1	38.1
				J	27.6	88.7	2.1	2458.5	2458.5	53.0	53.0
			RC ENV~1 Max	I	43.5	75.4	127.1	2467.4	2024.2	158.2	717.5
				J	47.7	75.4	146.5	2752.2	2501.1	1046.6	804.6
			Min	I	-149.2	-102.0	-35.8	-2024.2	-2467.4	-717.5	-158.2
				J	-143.8	-102.0	-16.4	-2501.1	-2752.2	-804.6	-1046.6

			RC ENV~2 Max	I	-49.5	4.3	67.4	513.2	-12.5	-226.4	409.7
				J	-45.4	4.3	86.8	492.6	202.2	327.3	199.4
			Min	I	-105.8	-37.2	18.7	12.5	-513.2	-409.7	226.4
				J	-101.6	-37.2	38.1	-202.2	-492.6	-199.4	-327.3
289	1	2	SX(RS)	I	92.7	60.2	82.9	2626.7	2626.7	925.6	925.6
				J	92.7	60.2	82.9	3017.0	3017.0	1497.8	1497.8
			SY(RS)	I	27.6	81.2	2.1	2458.5	2458.5	53.0	53.0
				J	27.6	81.2	2.1	3041.0	3041.0	68.2	68.2
			RC ENV~1 Max	I	46.4	68.0	147.9	2752.2	2501.1	1046.6	804.6
				J	50.6	68.0	167.3	3070.5	3011.6	2159.6	835.9
			Min	I	-143.8	-94.5	-17.8	-2501.1	-2752.2	-804.6	-1046.6
				J	-138.4	-94.5	1.5	-3011.6	-3070.5	-835.9	-2159.6
			RC ENV~2 Max	I	-45.4	4.3	86.8	492.6	202.2	327.3	199.4
				J	-41.2	4.3	106.2	493.7	438.6	1025.9	-146.6
			Min	I	-101.6	-37.2	38.1	-202.2	-492.6	-199.4	-327.3
				J	-97.4	-37.2	57.5	-438.6	-493.7	146.6	-1025.9
290	1	2	SX(RS)	I	91.5	59.9	84.2	3017.0	3017.0	1497.8	1497.8
				J	91.5	59.9	84.2	3414.5	3414.5	2094.5	2094.5
			SY(RS)	I	27.6	73.0	2.1	3041.0	3041.0	68.2	68.2
				J	27.6	73.0	2.1	3563.3	3563.3	83.5	83.5
			RC ENV~1 Max	I	49.4	59.7	168.7	3070.5	3011.6	2159.6	835.9
				J	53.5	59.7	188.0	3496.7	3629.9	3437.5	751.5
			Min	I	-138.4	-86.3	0.2	-3011.6	-3070.5	-835.9	-2159.6
				J	-133.0	-86.3	19.5	-3629.9	-3496.7	-751.5	-3437.5
			RC ENV~2 Max	I	-41.2	4.3	106.2	493.7	438.6	1025.9	-146.6
				J	-37.0	4.3	125.6	524.9	705.0	1864.7	-632.8
			Min	I	-97.4	-37.2	57.5	-438.6	-493.7	146.6	-1025.9
				J	-93.3	-37.2	76.9	-705.0	-524.9	632.8	-1864.7
291	1	2	SX(RS)	I	92.7	60.2	82.9	3017.0	3017.0	1497.8	1497.8
				J	92.7	60.2	82.9	2626.7	2626.7	925.6	925.6
			SY(RS)	I	27.6	81.2	2.1	3041.0	3041.0	68.2	68.2
				J	27.6	81.2	2.1	2458.4	2458.4	53.0	53.0
			RC ENV~1 Max	I	50.1	95.3	-2.5	3067.1	3014.9	2180.6	814.9
				J	45.9	95.3	16.9	2754.8	2498.5	1060.7	790.6
			Min	I	-158.5	-67.1	-168.2	-3014.9	-3067.1	-814.9	-2180.6
				J	-163.9	-67.1	-148.9	-2498.5	-2754.8	-790.6	-1060.7
			RC ENV~2 Max	I	-25.8	36.4	-61.2	422.7	414.5	1103.9	-237.4
				J	-29.9	36.4	-41.8	478.2	198.8	386.0	135.2
			Min	I	-110.8	3.5	-108.9	-414.5	-422.7	237.4	-1103.9
				J	-114.9	3.5	-89.5	-198.8	-478.2	-135.2	-386.0
292	1	2	SX(RS)	I	94.0	60.8	81.5	2626.7	2626.7	925.6	925.6
				J	94.0	60.8	81.5	2245.8	2245.8	437.8	437.8
			SY(RS)	I	27.6	88.7	2.1	2458.4	2458.4	53.0	53.0
				J	27.6	88.7	2.1	1821.8	1821.8	38.1	38.1
			RC ENV~1 Max	I	47.2	102.8	15.5	2754.8	2498.5	1060.7	790.6
				J	43.0	102.8	34.9	2476.1	2015.6	165.3	710.3
			Min	I	-163.9	-74.6	-147.5	-2498.5	-2754.8	-790.6	-1060.7
				J	-169.4	-74.6	-128.1	-2015.6	-2476.1	-710.3	-165.3
			RC ENV~2 Max	I	-29.9	36.4	-41.8	478.2	198.8	386.0	135.2
				J	-34.1	36.4	-22.4	555.4	4.7	-187.0	372.3
			Min	I	-114.9	3.5	-89.5	-198.8	-478.2	-135.2	-386.0
				J	-119.1	3.5	-70.1	-4.7	-555.4	-372.3	187.0
293	1	2	SX(RS)	I	95.4	61.4	80.1	2245.8	2245.8	437.8	437.8
				J	95.4	61.4	80.1	1881.2	1881.2	460.8	460.8
			SY(RS)	I	27.6	95.1	2.1	1821.8	1821.8	38.1	38.1
				J	27.6	95.1	2.1	1140.8	1140.8	24.1	24.1
			RC ENV~1 Max	I	44.4	109.2	33.5	2476.1	2015.6	165.3	710.3
				J	40.2	109.2	52.8	2213.6	1548.9	-79.0	1000.6
			Min	I	-169.4	-81.0	-126.7	-2015.6	-2476.1	-710.3	-165.3
				J	-174.8	-81.0	-107.3	-1548.9	-2213.6	-1000.6	79.0

			RC ENV~2 Max	I	-34.1	36.4	-22.4	555.4	4.7	-187.0	372.3
				J	-38.3	36.4	-3.0	704.1	-189.3	-459.8	629.0
			Min	I	-119.1	3.5	-70.1	-4.7	-555.4	-372.3	187.0
				J	-123.3	3.5	-50.7	189.3	-704.1	-629.0	459.8
294	1	2	SX(RS)	I	96.9	62.1	78.7	1881.2	1881.2	460.8	460.8
				J	96.9	62.1	78.7	1547.8	1547.8	940.0	940.0
			SY(RS)	I	27.6	100.3	2.1	1140.8	1140.8	24.1	24.1
				J	27.6	100.3	2.1	437.7	437.7	13.5	13.5
			RC ENV~1 Max	I	41.8	114.4	51.4	2213.6	1548.9	-79.0	1000.6
				J	37.6	114.4	70.8	1982.2	1113.4	273.1	1606.9
			Min	I	-174.8	-86.2	-105.9	-1548.9	-2213.6	-1000.6	79.0
				J	-180.2	-86.2	-86.6	-1113.4	-1982.2	-1606.9	-273.1
			RC ENV~2 Max	I	-38.3	36.4	-3.0	704.1	-189.3	-459.8	629.0
				J	-42.4	36.4	16.3	866.7	-383.3	-411.7	926.2
			Min	I	-123.3	3.5	-50.7	189.3	-704.1	-629.0	459.8
				J	-127.4	3.5	-31.4	383.3	-866.7	-926.2	411.7
295	1	2	SX(RS)	I	98.5	62.6	77.3	1547.8	1547.8	940.0	940.0
				J	98.5	62.6	77.3	1275.4	1275.4	1473.3	1473.3
			SY(RS)	I	27.6	104.2	2.1	437.7	437.7	13.5	13.5
				J	27.6	104.2	2.1	383.5	383.5	16.0	16.0
			RC ENV~1 Max	I	39.2	118.3	69.4	1982.2	1113.4	273.1	1606.9
				J	35.1	118.3	88.8	1811.9	738.8	819.6	2127.0
			Min	I	-180.2	-90.1	-85.2	-1113.4	-1982.2	-1606.9	-273.1
				J	-185.6	-90.1	-65.8	-738.8	-1811.9	-2127.0	-819.6
			RC ENV~2 Max	I	-42.4	36.4	16.3	866.7	-383.3	-411.7	926.2
				J	-46.6	36.4	35.7	1045.8	-533.8	-223.3	1083.1
			Min	I	-127.4	3.5	-31.4	383.3	-866.7	-926.2	411.7
				J	-131.6	3.5	-12.0	533.8	-1045.8	-1083.1	223.3
296	1	2	SX(RS)	I	100.3	63.1	75.9	1275.4	1275.4	1473.3	1473.3
				J	100.3	63.1	75.9	1116.0	1116.0	2009.7	2009.7
			SY(RS)	I	27.6	107.0	2.1	383.5	383.5	16.0	16.0
				J	27.6	107.0	2.1	1129.5	1129.5	28.0	28.0
			RC ENV~1 Max	I	36.8	121.1	87.4	1811.9	738.8	819.6	2127.0
				J	32.7	121.1	106.8	1841.8	490.9	1509.4	2510.0
			Min	I	-185.6	-92.9	-64.4	-738.8	-1811.9	-2127.0	-819.6
				J	-191.0	-92.9	-45.0	-490.9	-1841.8	-2510.0	-1509.4
			RC ENV~2 Max	I	-46.6	36.4	35.7	1045.8	-533.8	-223.3	1083.1
				J	-50.8	36.4	55.1	1309.5	-575.4	105.3	1099.8
			Min	I	-131.6	3.5	-12.0	533.8	-1045.8	-1083.1	223.3
				J	-135.8	3.5	7.4	575.4	-1309.5	-1099.8	-105.3
297	1	2	SX(RS)	I	102.1	63.4	74.5	1116.0	1116.0	2009.7	2009.7
				J	102.1	63.4	74.5	1124.9	1124.9	2540.9	2540.9
			SY(RS)	I	27.6	108.7	2.1	1129.5	1129.5	28.0	28.0
				J	27.6	108.7	2.1	1906.8	1906.8	41.8	41.8
			RC ENV~1 Max	I	34.5	122.8	105.4	1841.8	490.9	1509.4	2510.0
				J	30.3	122.8	124.8	2647.4	1166.1	2334.3	2747.5
			Min	I	-191.0	-94.6	-43.6	-490.9	-1841.8	-2510.0	-1509.4
				J	-196.4	-94.6	-24.3	-1166.1	-2647.4	-2747.5	-2334.3
			RC ENV~2 Max	I	-50.8	36.4	55.1	1309.5	-575.4	105.3	1099.8
				J	-54.9	36.4	74.5	1573.3	-600.8	574.1	976.2
			Min	I	-135.8	3.5	7.4	575.4	-1309.5	-1099.8	-105.3
				J	-139.9	3.5	26.8	600.8	-1573.3	-976.2	-574.1
298	1	2	SX(RS)	I	104.0	63.5	73.2	1124.9	1124.9	2540.9	2540.9
				J	104.0	63.5	73.2	1302.9	1302.9	3064.5	3064.5
			SY(RS)	I	27.6	109.7	2.0	1906.8	1906.8	41.8	41.8
				J	27.6	109.7	2.0	2691.8	2691.8	56.0	56.0
			RC ENV~1 Max	I	32.2	123.8	123.4	2647.4	1166.1	2334.3	2747.5
				J	28.0	123.8	142.8	3534.6	1849.0	3291.8	2837.2
			Min	I	-196.4	-95.6	-22.9	-1166.1	-2647.4	-2747.5	-2334.3

				J	-201.9	-95.6	-3.5	-1849.0	-3534.6	-2837.2	-3291.8
			RC ENV~2 Max	I	-54.9	36.4	74.5	1573.3	-600.8	574.1	976.2
				J	-59.1	36.4	93.8	1837.0	-626.2	1183.2	712.4
			Min	I	-139.9	3.5	26.8	600.8	-1573.3	-976.2	-574.1
				J	-144.1	3.5	46.1	626.2	-1837.0	-712.4	-1183.2
299	1	2	SX(RS)	I	92.7	60.2	83.2	3016.6	3016.6	1500.9	1500.9
				J	92.7	60.2	83.2	2626.1	2626.1	926.8	926.8
			SY(RS)	I	27.6	81.2	2.1	3041.0	3041.0	68.2	68.2
				J	27.6	81.2	2.1	2458.5	2458.5	53.0	53.0
			RC ENV~1 Max	I	50.5	95.5	-1.7	3055.6	3026.5	2171.1	830.8
				J	46.4	95.5	17.7	2743.8	2508.5	1052.6	801.0
			Min	I	-134.8	-67.0	-168.1	-3026.5	-3055.6	-830.8	-2171.1
				J	-139.0	-67.0	-148.7	-2508.5	-2743.8	-801.0	-1052.6
			RC ENV~2 Max	I	-36.9	39.8	-61.9	441.2	491.2	1132.6	-253.3
				J	-41.0	39.8	-42.6	459.5	235.3	401.7	124.9
			Min	I	-92.5	-1.6	-110.7	-491.2	-441.2	253.3	-1132.6
				J	-96.6	-1.6	-91.3	-235.3	-459.5	-124.9	-401.7
300	1	2	SX(RS)	I	94.0	60.7	81.8	2626.1	2626.1	926.8	926.8
				J	94.0	60.7	81.8	2245.1	2245.1	437.8	437.8
			SY(RS)	I	27.6	88.7	2.1	2458.5	2458.5	53.0	53.0
				J	27.6	88.7	2.1	1821.9	1821.9	38.1	38.1
			RC ENV~1 Max	I	47.7	103.0	16.3	2743.8	2508.5	1052.6	801.0
				J	43.5	103.0	35.6	2465.7	2024.4	159.5	716.0
			Min	I	-140.3	-74.5	-147.3	-2508.5	-2743.8	-801.0	-1052.6
				J	-144.4	-74.5	-127.9	-2024.4	-2465.7	-716.0	-159.5
			RC ENV~2 Max	I	-41.0	39.8	-42.6	459.5	235.3	401.7	124.9
				J	-45.2	39.8	-23.2	499.5	1.2	-184.3	367.5
			Min	I	-96.6	-1.6	-91.3	-235.3	-459.5	-124.9	-401.7
				J	-100.8	-1.6	-71.9	-1.2	-499.5	-367.5	184.3
301	1	2	SX(RS)	I	95.4	61.4	80.4	2245.1	2245.1	437.8	437.8
				J	95.4	61.4	80.4	1880.1	1880.1	463.6	463.6
			SY(RS)	I	27.6	95.1	2.1	1821.9	1821.9	38.1	38.1
				J	27.6	95.1	2.1	1140.9	1140.9	24.1	24.1
			RC ENV~1 Max	I	44.9	109.4	34.2	2465.7	2024.4	159.5	716.0
				J	40.7	109.4	53.6	2203.8	1556.3	-78.5	1005.7
			Min	I	-145.8	-80.9	-126.5	-2024.4	-2465.7	-716.0	-159.5
				J	-150.0	-80.9	-107.1	-1556.3	-2203.8	-1005.7	78.5
			RC ENV~2 Max	I	-45.2	39.8	-23.2	499.5	1.2	-184.3	367.5
				J	-49.4	39.8	-3.8	638.3	-233.0	-460.6	639.3
			Min	I	-100.8	-1.6	-71.9	-1.2	-499.5	-367.5	184.3
				J	-105.0	-1.6	-52.5	233.0	-638.3	-639.3	460.6
302	1	2	SX(RS)	I	96.9	62.0	79.0	1880.1	1880.1	463.6	463.6
				J	96.9	62.0	79.0	1546.0	1546.0	945.0	945.0
			SY(RS)	I	27.6	100.3	2.1	1140.9	1140.9	24.1	24.1
				J	27.6	100.3	2.1	437.7	437.7	13.5	13.5
			RC ENV~1 Max	I	42.3	114.6	52.2	2203.8	1556.3	-78.5	1005.7
				J	38.1	114.6	71.6	1972.8	1119.2	279.4	1610.7
			Min	I	-151.6	-86.1	-105.7	-1556.3	-2203.8	-1005.7	78.5
				J	-155.7	-86.1	-86.3	-1119.2	-1972.8	-1610.7	-279.4
			RC ENV~2 Max	I	-49.4	39.8	-3.8	638.3	-233.0	-460.6	639.3
				J	-53.5	39.8	15.6	823.0	-394.2	-418.1	949.4
			Min	I	-105.0	-1.6	-52.5	233.0	-638.3	-639.3	460.6
				J	-109.1	-1.6	-33.2	394.2	-823.0	-949.4	418.1
303	1	2	SX(RS)	I	98.6	62.6	77.5	1546.0	1546.0	945.0	945.0
				J	98.6	62.6	77.5	1272.9	1272.9	1480.1	1480.1
			SY(RS)	I	27.6	104.2	2.1	437.7	437.7	13.5	13.5
				J	27.6	104.2	2.1	383.4	383.4	15.9	15.9
			RC ENV~1 Max	I	39.8	118.5	70.1	1972.8	1119.2	279.4	1610.7
				J	35.6	118.5	89.5	1802.7	743.0	831.1	2129.1

				Min	I	-157.4	-90.0	-84.9	-1119.2	-1972.8	-1610.7	-279.4
					J	-161.5	-90.0	-65.5	-743.0	-1802.7	-2129.1	-831.1
			RC ENV~2	Max	I	-53.5	39.8	15.6	823.0	-394.2	-418.1	949.4
					J	-57.7	39.8	34.9	1111.4	-382.4	-235.4	1119.4
				Min	I	-109.1	-1.6	-33.2	394.2	-823.0	-949.4	418.1
					J	-113.3	-1.6	-13.8	382.4	-1111.4	-1119.4	235.4
304	1	2	SX(RS)		I	100.3	63.1	76.1	1272.9	1272.9	1480.1	1480.1
					J	100.3	63.1	76.1	1112.9	1112.9	2018.3	2018.3
			SY(RS)		I	27.6	107.0	2.1	383.4	383.4	15.9	15.9
					J	27.6	107.0	2.1	1129.3	1129.3	27.9	27.9
			RC ENV~1	Max	I	37.4	121.2	88.1	1802.7	743.0	831.1	2129.1
					J	33.2	121.2	107.5	1976.1	496.4	1526.2	2510.4
				Min	I	-163.3	-92.7	-64.1	-743.0	-1802.7	-2129.1	-831.1
					J	-167.5	-92.7	-44.8	-496.4	-1976.1	-2510.4	-1526.2
			RC ENV~2	Max	I	-57.7	39.8	34.9	1111.4	-382.4	-235.4	1119.4
					J	-61.9	39.8	54.3	1399.8	-370.7	87.6	1149.0
				Min	I	-113.3	-1.6	-13.8	382.4	-1111.4	-1119.4	235.4
					J	-117.5	-1.6	5.6	370.7	-1399.8	-1149.0	-87.6
305	1	2	SX(RS)		I	102.2	63.4	74.7	1112.9	1112.9	2018.3	2018.3
					J	102.2	63.4	74.7	1121.9	1121.9	2551.0	2551.0
			SY(RS)		I	27.6	108.7	2.1	1129.3	1129.3	27.9	27.9
					J	27.6	108.7	2.1	1906.7	1906.7	41.7	41.7
			RC ENV~1	Max	I	35.0	122.9	106.1	1976.1	496.4	1526.2	2510.4
					J	30.9	122.9	125.5	2642.6	1170.7	2356.1	2746.0
				Min	I	-169.3	-94.5	-43.4	-496.4	-1976.1	-2510.4	-1526.2
					J	-173.5	-94.5	-24.0	-1170.7	-2642.6	-2746.0	-2356.1
			RC ENV~2	Max	I	-61.9	39.8	54.3	1399.8	-370.7	87.6	1149.0
					J	-66.0	39.8	73.7	1688.2	-358.9	550.9	1038.4
				Min	I	-117.5	-1.6	5.6	370.7	-1399.8	-1149.0	-87.6
					J	-121.6	-1.6	25.0	358.9	-1688.2	-1038.4	-550.9
306	1	2	SX(RS)		I	104.1	63.5	73.4	1121.9	1121.9	2551.0	2551.0
					J	104.1	63.5	73.4	1300.7	1300.7	3076.2	3076.2
			SY(RS)		I	27.6	109.7	2.0	1906.7	1906.7	41.7	41.7
					J	27.6	109.7	2.0	2691.7	2691.7	55.9	55.9
			RC ENV~1	Max	I	32.8	123.9	124.1	2642.6	1170.7	2356.1	2746.0
					J	28.6	123.9	143.5	3530.8	1852.7	3318.6	2833.7
				Min	I	-175.4	-95.5	-22.6	-1170.7	-2642.6	-2746.0	-2356.1
					J	-179.6	-95.5	-3.3	-1852.7	-3530.8	-2833.7	-3318.6
			RC ENV~2	Max	I	-66.0	39.8	73.7	1688.2	-358.9	550.9	1038.4
					J	-70.2	39.8	93.1	1976.6	-347.2	1154.4	787.6
				Min	I	-121.6	-1.6	25.0	358.9	-1688.2	-1038.4	-550.9
					J	-125.8	-1.6	44.3	347.2	-1976.6	-787.6	-1154.4
307	1	2	SX(RS)		I	92.7	60.2	83.2	3016.6	3016.6	1500.9	1500.9
					J	92.7	60.2	83.2	2626.1	2626.1	926.8	926.8
			SY(RS)		I	27.6	81.2	2.1	3041.0	3041.0	68.2	68.2
					J	27.6	81.2	2.1	2458.4	2458.4	53.0	53.0
			RC ENV~1	Max	I	50.2	67.9	-1.4	3002.6	3079.5	2163.4	838.5
					J	46.0	67.9	18.0	2491.3	2761.0	1047.5	806.1
				Min	I	-147.7	-94.6	-167.7	-3079.5	-3002.6	-838.5	-2163.4
					J	-153.1	-94.6	-148.3	-2761.0	-2491.3	-806.1	-1047.5
			RC ENV~2	Max	I	-19.1	-1.5	-61.6	389.6	447.6	1108.7	-242.1
					J	-23.3	-1.5	-42.2	188.6	488.4	387.6	133.7
				Min	I	-104.1	-34.4	-109.3	-447.6	-389.6	242.1	-1108.7
					J	-108.3	-34.4	-89.9	-488.4	-188.6	-133.7	-387.6
308	1	2	SX(RS)		I	94.0	60.7	81.8	2626.1	2626.1	926.8	926.8
					J	94.0	60.7	81.8	2245.1	2245.1	437.8	437.8
			SY(RS)		I	27.6	88.7	2.1	2458.4	2458.4	53.0	53.0
					J	27.6	88.7	2.1	1821.8	1821.8	38.1	38.1
			RC ENV~1	Max	I	47.3	75.4	16.6	2491.3	2761.0	1047.5	806.1

				J	43.2	75.4	36.0	2013.9	2476.3	157.1	718.5
			Min	I	-153.1	-102.0	-146.9	-2761.0	-2491.3	-806.1	-1047.5
				J	-158.5	-102.0	-127.5	-2476.3	-2013.9	-718.5	-157.1
		RC ENV~2	Max	I	-23.3	-1.5	-42.2	188.6	488.4	387.6	133.7
				J	-27.5	-1.5	-22.9	9.3	550.8	-188.7	374.0
			Min	I	-108.3	-34.4	-89.9	-488.4	-188.6	-133.7	-387.6
				J	-112.5	-34.4	-70.6	-550.8	-9.3	-374.0	188.7
309	1	2	SX(RS)	I	95.4	61.4	80.4	2245.1	2245.1	437.8	437.8
				J	95.4	61.4	80.4	1880.1	1880.1	463.6	463.6
			SY(RS)	I	27.6	95.1	2.1	1821.8	1821.8	38.1	38.1
				J	27.6	95.1	2.1	1140.8	1140.8	24.1	24.1
		RC ENV~1	Max	I	44.6	81.8	34.6	2013.9	2476.3	157.1	718.5
				J	40.4	81.8	54.0	1552.5	2207.7	-78.3	1005.5
			Min	I	-158.5	-108.5	-126.1	-2476.3	-2013.9	-718.5	-157.1
				J	-163.9	-108.5	-106.8	-2207.7	-1552.5	-1005.5	78.3
		RC ENV~2	Max	I	-27.5	-1.5	-22.9	9.3	550.8	-188.7	374.0
				J	-31.6	-1.5	-3.5	-170.0	684.8	-464.8	634.0
			Min	I	-112.5	-34.4	-70.6	-550.8	-9.3	-374.0	188.7
				J	-116.6	-34.4	-51.2	-684.8	170.0	-634.0	464.8
310	1	2	SX(RS)	I	96.9	62.0	79.0	1880.1	1880.1	463.6	463.6
				J	96.9	62.0	79.0	1546.0	1546.0	945.0	945.0
			SY(RS)	I	27.6	100.3	2.1	1140.8	1140.8	24.1	24.1
				J	27.6	100.3	2.1	437.7	437.7	13.5	13.5
		RC ENV~1	Max	I	42.0	87.0	52.6	1552.5	2207.7	-78.3	1005.5
				J	37.8	87.0	71.9	1122.1	1970.0	282.2	1607.9
			Min	I	-163.9	-113.6	-105.3	-2207.7	-1552.5	-1005.5	78.3
				J	-169.3	-113.6	-86.0	-1970.0	-1122.1	-1607.9	-282.2
		RC ENV~2	Max	I	-31.6	-1.5	-3.5	-170.0	684.8	-464.8	634.0
				J	-35.8	-1.5	15.9	-349.3	832.6	-419.9	934.4
			Min	I	-116.6	-34.4	-51.2	-684.8	170.0	-634.0	464.8
				J	-120.8	-34.4	-31.8	-832.6	349.3	-934.4	419.9
311	1	2	SX(RS)	I	98.6	62.6	77.5	1546.0	1546.0	945.0	945.0
				J	98.6	62.6	77.5	1272.9	1272.9	1480.1	1480.1
			SY(RS)	I	27.6	104.2	2.1	437.7	437.7	13.5	13.5
				J	27.6	104.2	2.1	383.5	383.5	16.0	16.0
		RC ENV~1	Max	I	39.5	90.9	70.5	1122.1	1970.0	282.2	1607.9
				J	35.3	90.9	89.9	752.5	1793.2	836.5	2123.7
			Min	I	-169.3	-117.6	-84.6	-1970.0	-1122.1	-1607.9	-282.2
				J	-174.7	-117.6	-65.2	-1793.2	-752.5	-2123.7	-836.5
		RC ENV~2	Max	I	-35.8	-1.5	15.9	-349.3	832.6	-419.9	934.4
				J	-40.0	-1.5	35.3	-501.1	997.0	-234.8	1094.6
			Min	I	-120.8	-34.4	-31.8	-832.6	349.3	-934.4	419.9
				J	-125.0	-34.4	-12.4	-997.0	501.1	-1094.6	234.8
312	1	2	SX(RS)	I	100.3	63.1	76.1	1272.9	1272.9	1480.1	1480.1
				J	100.3	63.1	76.1	1113.0	1113.0	2018.3	2018.3
			SY(RS)	I	27.6	107.0	2.1	383.5	383.5	16.0	16.0
				J	27.6	107.0	2.1	1129.5	1129.5	28.0	28.0
		RC ENV~1	Max	I	37.1	93.7	88.5	752.5	1793.2	836.5	2123.7
				J	32.9	93.7	107.8	512.7	1746.2	1534.2	2502.3
			Min	I	-174.7	-120.3	-63.8	-1793.2	-752.5	-2123.7	-836.5
				J	-180.2	-120.3	-44.4	-1746.2	-512.7	-2502.3	-1534.2
		RC ENV~2	Max	I	-40.0	-1.5	35.3	-501.1	997.0	-234.8	1094.6
				J	-44.1	-1.5	54.6	-511.8	1246.0	90.5	1114.6
			Min	I	-125.0	-34.4	-12.4	-997.0	501.1	-1094.6	234.8
				J	-129.1	-34.4	6.9	-1246.0	511.8	-1114.6	-90.5
313	1	2	SX(RS)	I	102.2	63.4	74.7	1113.0	1113.0	2018.3	2018.3
				J	102.2	63.4	74.7	1121.9	1121.9	2551.0	2551.0
			SY(RS)	I	27.6	108.7	2.1	1129.5	1129.5	28.0	28.0
				J	27.6	108.7	2.1	1906.7	1906.7	41.8	41.8

			RC ENV~1 Max	I	34.7	95.4	106.5	512.7	1746.2	1534.2	2502.3
				J	30.6	95.4	125.8	1193.7	2619.8	2366.8	2735.3
			Min	I	-180.2	-122.0	-43.0	-1746.2	-512.7	-2502.3	-1534.2
				J	-185.6	-122.0	-23.6	-2619.8	-1193.7	-2735.3	-2366.8
			RC ENV~2 Max	I	-44.1	-1.5	54.6	-511.8	1246.0	90.5	1114.6
				J	-48.3	-1.5	74.0	-522.6	1495.0	556.1	994.2
			Min	I	-129.1	-34.4	6.9	-1246.0	511.8	-1114.6	-90.5
				J	-133.3	-34.4	26.3	-1495.0	522.6	-994.2	-556.1
314	1	2	SX(RS)	I	104.1	63.5	73.4	1121.9	1121.9	2551.0	2551.0
				J	104.1	63.5	73.4	1300.8	1300.8	3076.2	3076.2
			SY(RS)	I	27.6	109.7	2.0	1906.7	1906.7	41.8	41.8
				J	27.6	109.7	2.0	2691.8	2691.8	56.0	56.0
			RC ENV~1 Max	I	32.5	96.4	124.5	1193.7	2619.8	2366.8	2735.3
				J	28.3	96.4	143.9	1882.3	3501.3	3332.0	2820.4
			Min	I	-185.6	-123.0	-22.3	-2619.8	-1193.7	-2735.3	-2366.8
				J	-191.0	-123.0	-2.9	-3501.3	-1882.3	-2820.4	-3332.0
			RC ENV~2 Max	I	-48.3	-1.5	74.0	-522.6	1495.0	556.1	994.2
				J	-52.5	-1.5	93.4	-533.3	1744.0	1162.0	733.7
			Min	I	-133.3	-34.4	26.3	-1495.0	522.6	-994.2	-556.1
				J	-137.5	-34.4	45.7	-1744.0	533.3	-733.7	-1162.0
315	1	2	SX(RS)	I	50.8	67.8	3.3	731.4	731.4	128.5	128.5
				J	50.8	67.8	3.3	418.9	418.9	104.9	104.9
			SY(RS)	I	74.3	40.9	87.9	2173.3	2173.3	1893.9	1893.9
				J	74.3	40.9	87.9	1984.4	1984.4	1260.0	1260.0
			RC ENV~1 Max	I	33.7	163.8	-46.7	1855.2	2491.3	1706.5	2081.4
				J	33.7	124.5	15.7	2001.4	1967.3	323.6	2291.0
			Min	I	-114.8	-14.7	-317.1	-2491.3	-1855.2	-2081.4	-1706.5
				J	-114.8	-28.3	-168.8	-1967.3	-2001.4	-2291.0	-323.6
			RC ENV~2 Max	I	-19.1	116.3	-102.5	8.6	831.4	-123.4	379.7
				J	-19.1	88.3	-55.0	175.2	124.9	-693.4	1652.2
			Min	I	-80.6	27.4	-229.4	-831.4	-8.6	-379.7	123.4
				J	-80.6	18.6	-122.2	-124.9	-175.2	-1652.2	693.4
316	1	2	SX(RS)	I	50.8	51.7	3.3	418.9	418.9	104.9	104.9
				J	50.8	51.7	3.3	453.7	453.7	81.5	81.5
			SY(RS)	I	64.0	39.9	87.9	1984.4	1984.4	1260.0	1260.0
				J	64.0	39.9	87.9	1784.9	1784.9	631.2	631.2
			RC ENV~1 Max	I	23.4	124.5	15.7	2001.4	1967.3	323.6	2291.0
				J	23.4	85.2	78.1	2038.9	1531.0	-602.2	2976.6
			Min	I	-112.6	-12.2	-168.8	-1967.3	-2001.4	-2291.0	-323.6
				J	-112.6	-25.8	-97.8	-1531.0	-2038.9	-2976.6	602.2
			RC ENV~2 Max	I	-19.1	88.3	-55.0	175.2	124.9	-693.4	1652.2
				J	-19.1	60.3	-7.5	454.8	-252.6	-919.6	2149.2
			Min	I	-80.6	18.6	-122.2	-124.9	-175.2	-1652.2	693.4
				J	-80.6	9.9	-15.1	252.6	-454.8	-2149.2	919.6
317	1	2	SX(RS)	I	50.8	34.6	3.3	453.7	453.7	81.5	81.5
				J	50.8	34.6	3.3	598.2	598.2	58.5	58.5
			SY(RS)	I	57.1	40.3	87.9	1784.9	1784.9	631.2	631.2
				J	57.1	40.3	87.9	1556.5	1556.5	140.7	140.7
			RC ENV~1 Max	I	16.5	85.2	78.1	2038.9	1531.0	-602.2	2976.6
				J	16.5	52.6	140.5	1949.1	1164.0	-937.9	2589.3
			Min	I	-112.6	-14.3	-97.8	-1531.0	-2038.9	-2976.6	602.2
				J	-112.6	-27.9	-35.3	-1164.0	-1949.1	-2589.3	937.9
			RC ENV~2 Max	I	-19.1	60.3	-7.5	454.8	-252.6	-919.6	2149.2
				J	-19.1	32.3	92.1	782.0	-318.4	-802.1	1870.6
			Min	I	-80.6	9.9	-15.1	252.6	-454.8	-2149.2	919.6
				J	-80.6	1.1	40.0	318.4	-782.0	-1870.6	802.1
318	1	2	SX(RS)	I	50.8	20.3	3.3	598.2	598.2	58.5	58.5
				J	50.8	20.3	3.3	663.5	663.5	36.6	36.6
			SY(RS)	I	55.0	43.2	87.9	1556.5	1556.5	140.7	140.7
				J	55.0	43.2	87.9	1283.7	1283.7	672.0	672.0

			RC ENV~1 Max	I	14.4	55.6	140.5	1949.1	1164.0	-937.9	2589.3
				J	14.4	42.0	275.9	1716.6	850.7	200.1	1143.9
			Min	I	-112.6	-30.8	-35.3	-1164.0	-1949.1	-2589.3	937.9
				J	-112.6	-44.4	27.1	-850.7	-1716.6	-1143.9	-200.1
			RC ENV~2 Max	I	-19.1	32.3	92.1	782.0	-318.4	-802.1	1870.6
				J	-19.1	5.9	199.2	914.6	-294.9	-340.9	816.4
			Min	I	-80.6	1.1	40.0	318.4	-782.0	-1870.6	802.1
				J	-80.6	-7.6	87.5	294.9	-914.6	-816.4	340.9
319	1	2	SX(RS)	I	50.8	24.2	3.3	663.5	663.5	36.6	36.6
				J	50.8	24.2	3.3	619.9	619.9	19.8	19.8
			SY(RS)	I	58.1	48.7	87.9	1283.7	1283.7	672.0	672.0
				J	58.1	48.7	87.9	957.5	957.5	1301.4	1301.4
			RC ENV~1 Max	I	17.6	47.5	275.9	1716.6	850.7	200.1	1143.9
				J	17.6	33.9	424.1	1332.7	582.3	1888.0	714.8
			Min	I	-112.6	-49.9	27.1	-850.7	-1716.6	-1143.9	-200.1
				J	-112.6	-63.5	89.5	-582.3	-1332.7	-714.8	-1888.0
			RC ENV~2 Max	I	-19.1	5.9	199.2	914.6	-294.9	-340.9	816.4
				J	-19.1	-13.5	306.4	844.4	-208.1	1013.3	-464.2
			Min	I	-80.6	-7.6	87.5	294.9	-914.6	-816.4	340.9
				J	-80.6	-25.4	135.0	208.1	-844.4	464.2	-1013.3
320	1	2	SX(RS)	I	50.8	44.8	3.3	619.9	619.9	19.8	19.8
				J	50.8	44.8	3.3	541.7	541.7	24.0	24.0
			SY(RS)	I	65.8	55.6	87.9	957.5	957.5	1301.4	1301.4
				J	65.8	55.6	87.9	581.1	581.1	1935.5	1935.5
			RC ENV~1 Max	I	25.2	40.9	424.1	1332.7	582.3	1888.0	714.8
				J	25.2	27.3	572.4	815.7	361.9	5010.7	-161.5
			Min	I	-112.6	-70.4	89.5	-582.3	-1332.7	-714.8	-1888.0
				J	-112.6	-84.0	151.9	-361.9	-815.7	161.5	-5010.7
			RC ENV~2 Max	I	-19.1	-13.5	306.4	844.4	-208.1	1013.3	-464.2
				J	-19.1	-25.1	413.5	571.7	-57.9	3618.7	-1612.9
			Min	I	-80.6	-25.4	135.0	208.1	-844.4	464.2	-1013.3
				J	-80.6	-51.7	182.5	57.9	-571.7	1612.9	-3618.7
321	1	2	SX(RS)	I	51.2	63.8	0.5	1015.8	1015.8	17.5	17.5
				J	51.2	63.8	0.5	1436.7	1436.7	14.1	14.1
			SY(RS)	I	34.5	22.8	62.9	467.7	467.7	1138.7	1138.7
				J	34.5	22.8	62.9	302.7	302.7	683.2	683.2
			RC ENV~1 Max	I	9.0	97.8	-99.0	1663.5	501.4	1801.3	476.2
				J	9.0	84.2	-36.6	2227.9	725.0	399.6	966.9
			Min	I	-111.6	-29.7	-379.8	-501.4	-1663.5	-476.2	-1801.3
				J	-111.6	-43.3	-231.5	-725.0	-2227.9	-966.9	-399.6
			RC ENV~2 Max	I	-21.9	69.7	-125.5	1176.5	-245.4	1091.2	-546.5
				J	-21.9	41.7	-78.0	1579.4	-369.7	-190.2	509.1
			Min	I	-80.1	21.6	-274.7	245.4	-1176.5	546.5	-1091.2
				J	-80.1	12.8	-167.5	369.7	-1579.4	-509.1	190.2
322	1	2	SX(RS)	I	51.2	32.3	0.5	1436.7	1436.7	14.1	14.1
				J	51.2	32.3	0.5	1658.5	1658.5	10.9	10.9
			SY(RS)	I	17.3	27.4	62.9	302.7	302.7	683.2	683.2
				J	17.3	27.4	62.9	104.7	104.7	227.8	227.8
			RC ENV~1 Max	I	8.9	58.3	-36.6	2227.9	725.0	399.6	966.9
				J	8.9	39.2	25.8	2508.0	847.7	-550.3	1844.2
			Min	I	-111.6	-11.8	-231.5	-725.0	-2227.9	-966.9	-399.6
				J	-111.6	-25.4	-100.0	-847.7	-2508.0	-1844.2	550.3
			RC ENV~2 Max	I	-21.9	41.7	-78.0	1579.4	-369.7	-190.2	509.1
				J	-21.9	13.7	-30.5	1779.7	-430.7	-583.1	1333.8
			Min	I	-80.1	12.8	-167.5	369.7	-1579.4	-509.1	190.2
				J	-80.1	4.0	-60.4	430.7	-1779.7	-1333.8	583.1
323	1	2	SX(RS)	I	51.2	0.1	0.5	1658.5	1658.5	10.9	10.9
				J	51.2	0.1	0.5	1658.6	1658.6	8.4	8.4
			SY(RS)	I	0.0	28.9	62.9	104.7	104.7	227.8	227.8

				J	0.0	28.9	62.9	104.7	104.7	227.7	227.7
			RC ENV~1 Max	I	8.9	35.8	25.8	2508.0	847.7	-550.3	1844.2
				J	8.9	22.3	88.3	2503.7	847.0	-592.7	1910.5
			Min	I	-111.6	-22.0	-100.0	-847.7	-2508.0	-1844.2	550.3
				J	-111.6	-35.6	-37.6	-847.0	-2503.7	-1910.5	592.7
			RC ENV~2 Max	I	-21.9	13.7	-30.5	1779.7	-430.7	-583.1	1333.8
				J	-21.9	-4.7	46.8	1777.3	-428.3	-632.3	1383.0
			Min	I	-80.1	4.0	-60.4	430.7	-1779.7	-1333.8	583.1
				J	-80.1	-14.3	17.0	428.3	-1777.3	-1383.0	632.3
324	1	2	SX(RS)	I	51.2	32.3	0.5	1658.6	1658.6	8.4	8.4
				J	51.2	32.3	0.5	1437.1	1437.1	7.0	7.0
			SY(RS)	I	17.3	27.4	62.9	104.7	104.7	227.7	227.7
				J	17.3	27.4	62.9	302.7	302.7	683.2	683.2
			RC ENV~1 Max	I	8.9	25.6	88.3	2503.7	847.0	-592.7	1910.5
				J	8.9	12.0	213.2	2215.1	722.9	272.2	1094.3
			Min	I	-111.6	-38.9	-37.6	-847.0	-2503.7	-1910.5	592.7
				J	-111.6	-59.5	24.8	-722.9	-2215.1	-1094.3	-272.2
			RC ENV~2 Max	I	-21.9	-4.7	46.8	1777.3	-428.3	-632.3	1383.0
				J	-21.9	-13.5	153.9	1572.2	-362.5	-337.7	656.6
			Min	I	-80.1	-14.3	17.0	428.3	-1777.3	-1383.0	632.3
				J	-80.1	-42.3	64.4	362.5	-1572.2	-656.6	337.7
325	1	2	SX(RS)	I	51.2	63.8	0.5	1437.1	1437.1	7.0	7.0
				J	51.2	63.8	0.5	1016.2	1016.2	7.6	7.6
			SY(RS)	I	34.5	22.8	62.9	302.7	302.7	683.2	683.2
				J	34.5	22.8	62.9	467.7	467.7	1138.7	1138.7
			RC ENV~1 Max	I	8.9	43.5	213.2	2215.1	722.9	272.2	1094.3
				J	8.9	29.9	361.4	1642.2	497.6	1588.9	688.6
			Min	I	-111.6	-84.0	24.8	-722.9	-2215.1	-1094.3	-272.2
				J	-111.6	-98.8	87.3	-497.6	-1642.2	-688.6	-1588.9
			RC ENV~2 Max	I	-21.9	-13.5	153.9	1572.2	-362.5	-337.7	656.6
				J	-21.9	-22.2	261.1	1164.5	-233.4	845.4	-300.7
			Min	I	-80.1	-42.3	64.4	362.5	-1572.2	-656.6	337.7
				J	-80.1	-70.3	111.9	233.4	-1164.5	300.7	-845.4
326	1	2	SX(RS)	I	51.2	93.8	0.5	1016.2	1016.2	7.6	7.6
				J	51.2	93.8	0.5	541.4	541.4	9.8	9.8
			SY(RS)	I	51.8	16.1	62.9	467.7	467.7	1138.7	1138.7
				J	51.8	16.1	62.9	581.4	581.4	1594.2	1594.2
			RC ENV~1 Max	I	9.5	60.0	361.4	1642.2	497.6	1588.9	688.6
				J	9.5	46.4	509.7	806.2	356.6	4328.6	-169.1
			Min	I	-111.6	-127.6	87.3	-497.6	-1642.2	-688.6	-1588.9
				J	-111.6	-141.2	149.7	-356.6	-806.2	169.1	-4328.6
			RC ENV~2 Max	I	-21.9	-22.2	261.1	1164.5	-233.4	845.4	-300.7
				J	-21.9	-31.0	368.2	554.1	-40.9	3122.9	-1282.8
			Min	I	-80.1	-70.3	111.9	233.4	-1164.5	300.7	-845.4
				J	-80.1	-98.3	159.4	40.9	-554.1	1282.8	-3122.9
327	1	2	SX(RS)	I	50.9	24.3	3.9	621.5	621.5	33.9	33.9
				J	50.9	24.3	3.9	666.8	666.8	38.8	38.8
			SY(RS)	I	58.1	48.7	87.9	957.5	957.5	1301.4	1301.4
				J	58.1	48.7	87.9	1283.7	1283.7	672.0	672.0
			RC ENV~1 Max	I	10.6	62.6	-85.1	1332.5	582.5	1795.7	807.1
				J	10.6	49.1	-22.7	1710.4	856.9	139.8	1217.0
			Min	I	-124.2	-34.8	-419.0	-582.5	-1332.5	-807.1	-1795.7
				J	-124.2	-48.3	-270.7	-856.9	-1710.4	-1217.0	-139.8
			RC ENV~2 Max	I	-27.6	24.0	-130.9	817.2	-180.8	917.7	-368.5
				J	-27.6	6.2	-83.4	876.8	-257.1	-407.1	882.6
			Min	I	-89.1	12.0	-302.3	180.8	-817.2	368.5	-917.7
				J	-89.1	-7.3	-195.1	257.1	-876.8	-882.6	407.1
328	1	2	SX(RS)	I	50.8	20.2	3.9	666.8	666.8	38.8	38.8
				J	50.8	20.2	3.9	602.2	602.2	58.4	58.4

			SY(RS)	I	55.0	43.2	87.9	1283.7	1283.7	672.0	672.0
				J	55.0	43.2	87.9	1556.5	1556.5	140.7	140.7
			RC ENV~1 Max	I	7.4	43.5	-22.7	1710.4	856.9	139.8	1217.0
				J	7.4	30.0	39.8	1936.8	1176.3	-966.1	2640.0
			Min	I	-124.2	-42.8	-270.7	-856.9	-1710.4	-1217.0	-139.8
				J	-124.2	-56.4	-136.1	-1176.3	-1936.8	-2640.0	966.1
			RC ENV~2 Max	I	-27.6	6.2	-83.4	876.8	-257.1	-407.1	882.6
				J	-27.6	-2.6	-35.9	733.8	-270.2	-838.9	1907.3
			Min	I	-89.1	-7.3	-195.1	257.1	-876.8	-882.6	407.1
				J	-89.1	-33.8	-88.0	270.2	-733.8	-1907.3	838.9
329	1	2	SX(RS)	I	50.8	34.6	3.9	602.2	602.2	58.4	58.4
				J	50.8	34.6	3.9	456.5	456.5	82.9	82.9
			SY(RS)	I	57.1	40.3	87.9	1556.5	1556.5	140.7	140.7
				J	57.1	40.3	87.9	1784.9	1784.9	631.2	631.2
			RC ENV~1 Max	I	9.5	27.0	39.8	1936.8	1176.3	-966.1	2640.0
				J	9.5	13.5	102.2	2020.5	1549.4	-598.4	2990.0
			Min	I	-124.2	-53.5	-136.1	-1176.3	-1936.8	-2640.0	966.1
				J	-124.2	-87.3	-73.7	-1549.4	-2020.5	-2990.0	598.4
			RC ENV~2 Max	I	-27.6	-2.6	-35.9	733.8	-270.2	-838.9	1907.3
				J	-27.6	-11.3	19.2	396.1	-192.5	-926.9	2156.5
			Min	I	-89.1	-33.8	-88.0	270.2	-733.8	-1907.3	838.9
				J	-89.1	-61.8	11.6	192.5	-396.1	-2156.5	926.9
330	1	2	SX(RS)	I	50.8	51.7	3.9	456.5	456.5	82.9	82.9
				J	50.8	51.7	3.9	417.0	417.0	109.1	109.1
			SY(RS)	I	64.0	39.9	87.9	1784.9	1784.9	631.2	631.2
				J	64.0	39.9	87.9	1984.4	1984.4	1260.0	1260.0
			RC ENV~1 Max	I	16.4	25.0	102.2	2020.5	1549.4	-598.4	2990.0
				J	16.4	11.4	174.0	1976.9	1991.8	359.4	2267.0
			Min	I	-124.2	-87.3	-73.7	-1549.4	-2020.5	-2990.0	598.4
				J	-124.2	-126.6	-11.3	-1991.8	-1976.9	-2267.0	-359.4
			RC ENV~2 Max	I	-27.6	-11.3	19.2	396.1	-192.5	-926.9	2156.5
				J	-27.6	-20.1	126.3	106.1	194.0	-671.2	1630.1
			Min	I	-89.1	-61.8	11.6	192.5	-396.1	-2156.5	926.9
				J	-89.1	-89.7	59.1	-194.0	-106.1	-1630.1	671.2
331	1	2	SX(RS)	I	50.8	68.0	3.9	417.0	417.0	109.1	109.1
				J	50.8	68.0	3.9	727.7	727.7	135.9	135.9
			SY(RS)	I	74.3	40.9	87.9	1984.4	1984.4	1260.0	1260.0
				J	74.3	40.9	87.9	2173.3	2173.3	1893.9	1893.9
			RC ENV~1 Max	I	26.7	27.6	174.0	1976.9	1991.8	359.4	2267.0
				J	26.7	14.1	322.2	1824.6	2521.9	1774.3	2013.5
			Min	I	-124.2	-126.6	-11.3	-1991.8	-1976.9	-2267.0	-359.4
				J	-124.2	-165.9	51.2	-2521.9	-1824.6	-2013.5	-1774.3
			RC ENV~2 Max	I	-27.6	-20.1	126.3	106.1	194.0	-671.2	1630.1
				J	-27.6	-28.8	233.5	-71.0	911.0	-71.8	328.1
			Min	I	-89.1	-89.7	59.1	-194.0	-106.1	-1630.1	671.2
				J	-89.1	-117.7	106.6	-911.0	71.0	-328.1	71.8
332	1	2	SX(RS)	I	50.7	82.8	3.9	727.7	727.7	135.9	135.9
				J	50.7	82.8	3.9	1260.7	1260.7	163.1	163.1
			SY(RS)	I	86.8	41.8	87.9	2173.3	2173.3	1893.9	1893.9
				J	86.8	41.8	87.9	2369.4	2369.4	2529.2	2529.2
			RC ENV~1 Max	I	39.2	28.9	322.2	1824.6	2521.9	1774.3	2013.5
				J	39.2	15.3	470.5	1581.3	3157.4	3642.4	1415.9
			Min	I	-134.3	-165.9	51.2	-2521.9	-1824.6	-2013.5	-1774.3
				J	-134.3	-205.2	113.6	-3157.4	-1581.3	-1415.9	-3642.4
			RC ENV~2 Max	I	-27.6	-28.8	233.5	-71.0	911.0	-71.8	328.1
				J	-27.6	-37.6	340.6	-311.4	1864.6	1749.5	-871.5
			Min	I	-89.1	-117.7	106.6	-911.0	71.0	-328.1	71.8
				J	-89.1	-145.7	154.1	-1864.6	311.4	871.5	-1749.5
333	1	2	SX(RS)	I	50.8	67.8	3.3	731.5	731.5	128.4	128.4
				J	50.8	67.8	3.3	418.9	418.9	104.9	104.9

			SY(RS)	I	74.3	40.9	88.0	2173.3	2173.3	1894.5	1894.5
				J	74.3	40.9	88.0	1984.4	1984.4	1260.4	1260.4
			RC ENV~1 Max	I	29.4	13.7	-48.7	2524.8	1821.8	1742.3	2046.8
				J	29.4	27.3	13.7	1993.5	1975.3	344.4	2235.5
			Min	I	-119.1	-156.5	-305.4	-1821.8	-2524.8	-2046.8	-1742.3
				J	-119.1	-118.8	-162.3	-1975.3	-1993.5	-2235.5	-344.4
			RC ENV~2 Max	I	-29.8	-42.4	-112.9	829.0	-234.8	-146.8	376.9
				J	-29.8	-31.8	-59.9	125.9	33.8	-808.6	1608.8
			Min	I	-80.3	-111.4	-222.1	234.8	-829.0	-376.9	146.8
				J	-80.3	-84.5	-118.3	-33.8	-125.9	-1608.8	808.6
334	1	2	SX(RS)	I	50.8	51.7	3.3	418.9	418.9	104.9	104.9
				J	50.8	51.7	3.3	453.8	453.8	81.5	81.5
			SY(RS)	I	64.0	39.9	88.0	1984.4	1984.4	1260.4	1260.4
				J	64.0	39.9	88.0	1785.0	1785.0	631.4	631.4
			RC ENV~1 Max	I	19.1	11.2	13.7	1993.5	1975.3	344.4	2235.5
				J	19.1	24.8	76.1	1550.0	2020.0	-596.4	2889.9
			Min	I	-111.2	-118.8	-162.3	-1975.3	-1993.5	-2235.5	-344.4
				J	-111.2	-81.1	-99.8	-2020.0	-1550.0	-2889.9	596.4
			RC ENV~2 Max	I	-29.8	-31.8	-59.9	125.9	33.8	-808.6	1608.8
				J	-29.8	-21.3	-5.4	-203.0	402.3	-1050.6	2088.9
			Min	I	-80.3	-84.5	-118.3	-33.8	-125.9	-1608.8	808.6
				J	-80.3	-57.5	-14.4	-402.3	203.0	-2088.9	1050.6
335	1	2	SX(RS)	I	50.8	34.6	3.3	453.8	453.8	81.5	81.5
				J	50.8	34.6	3.3	598.2	598.2	58.5	58.5
			SY(RS)	I	57.1	40.3	88.0	1785.0	1785.0	631.4	631.4
				J	57.1	40.3	88.0	1556.6	1556.6	140.8	140.8
			RC ENV~1 Max	I	12.3	13.3	76.1	1550.0	2020.0	-596.4	2889.9
				J	12.3	26.9	138.5	1175.7	1937.5	-946.9	2507.0
			Min	I	-111.2	-81.1	-99.8	-2020.0	-1550.0	-2889.9	596.4
				J	-111.2	-53.6	-37.4	-1937.5	-1175.7	-2507.0	946.9
			RC ENV~2 Max	I	-29.8	-21.3	-5.4	-203.0	402.3	-1050.6	2088.9
				J	-29.8	-10.8	89.5	-342.5	712.7	-909.2	1817.2
			Min	I	-80.3	-57.5	-14.4	-402.3	203.0	-2088.9	1050.6
				J	-80.3	-30.6	46.0	-712.7	342.5	-1817.2	909.2
336	1	2	SX(RS)	I	50.8	20.3	3.3	598.2	598.2	58.5	58.5
				J	50.8	20.3	3.3	663.5	663.5	36.6	36.6
			SY(RS)	I	55.0	43.2	88.0	1556.6	1556.6	140.8	140.8
				J	55.0	43.2	88.0	1283.7	1283.7	672.3	672.3
			RC ENV~1 Max	I	10.1	29.8	138.5	1175.7	1937.5	-946.9	2507.0
				J	10.1	43.4	267.9	855.1	1712.2	176.5	1168.1
			Min	I	-111.2	-56.6	-37.4	-1937.5	-1175.7	-2507.0	946.9
				J	-111.2	-43.0	25.0	-1712.2	-855.1	-1168.1	-176.5
			RC ENV~2 Max	I	-29.8	-10.8	89.5	-342.5	712.7	-909.2	1817.2
				J	-29.8	0.4	193.3	-382.7	836.7	-384.5	793.6
			Min	I	-80.3	-30.6	46.0	-712.7	342.5	-1817.2	909.2
				J	-80.3	-3.8	99.0	-836.7	382.7	-793.6	384.5
337	1	2	SX(RS)	I	50.8	24.2	3.3	663.5	663.5	36.6	36.6
				J	50.8	24.2	3.3	619.9	619.9	19.7	19.7
			SY(RS)	I	58.1	48.7	88.0	1283.7	1283.7	672.3	672.3
				J	58.1	48.7	88.0	957.5	957.5	1302.0	1302.0
			RC ENV~1 Max	I	13.3	48.9	267.9	855.1	1712.2	176.5	1168.1
				J	13.3	62.5	411.2	579.6	1335.5	1849.9	754.1
			Min	I	-111.2	-48.5	25.0	-1712.2	-855.1	-1168.1	-176.5
				J	-111.2	-34.9	87.4	-1335.5	-579.6	-754.1	-1849.9
			RC ENV~2 Max	I	-29.8	0.4	193.3	-382.7	836.7	-384.5	793.6
				J	-29.8	23.3	297.2	-346.7	765.6	981.7	-523.6
			Min	I	-80.3	-3.8	99.0	-836.7	382.7	-793.6	384.5
				J	-80.3	10.0	151.9	-765.6	346.7	523.6	-981.7
338	1	2	SX(RS)	I	50.8	44.8	3.3	619.9	619.9	19.7	19.7

				J	50.8	44.8	3.3	541.7	541.7	23.9	23.9
			SY(RS)	I	65.8	55.6	88.0	957.5	957.5	1302.0	1302.0
				J	65.8	55.6	88.0	581.1	581.1	1936.3	1936.3
			RC ENV~1 Max	I	21.0	69.4	411.2	579.6	1335.5	1849.9	754.1
				J	21.0	83.0	554.5	351.9	810.2	4865.8	-107.2
			Min	I	-111.2	-41.9	87.4	-1335.5	-579.6	-754.1	-1849.9
				J	-111.2	-28.3	149.9	-810.2	-351.9	107.2	-4865.8
			RC ENV~2 Max	I	-29.8	23.3	297.2	-346.7	765.6	981.7	-523.6
				J	-29.8	50.2	401.1	-225.3	499.6	3508.9	-1815.0
			Min	I	-80.3	10.0	151.9	-765.6	346.7	523.6	-981.7
				J	-80.3	20.7	204.9	-499.6	225.3	1815.0	-3508.9
339	1	2	SX(RS)	I	51.2	63.8	0.5	1015.8	1015.8	17.6	17.6
				J	51.2	63.8	0.5	1436.7	1436.7	14.1	14.1
			SY(RS)	I	34.5	22.8	63.0	467.7	467.7	1139.3	1139.3
				J	34.5	22.8	63.0	302.7	302.7	683.6	683.6
			RC ENV~1 Max	I	8.4	29.8	-94.0	491.7	1539.9	1704.5	574.0
				J	8.4	43.3	-31.6	715.7	2157.8	338.6	1028.6
			Min	I	-98.5	-97.8	-356.7	-1539.9	-491.7	-574.0	-1704.5
				J	-98.5	-84.2	-213.4	-2157.8	-715.7	-1028.6	-338.6
			RC ENV~2 Max	I	-23.8	-26.0	-131.7	-460.4	1081.5	926.2	-465.6
				J	-23.8	-15.4	-78.7	-610.2	1469.1	-295.7	572.0
			Min	I	-72.0	-67.0	-258.9	-1081.5	460.4	465.6	-926.2
				J	-72.0	-40.1	-155.1	-1469.1	610.2	-572.0	295.7
340	1	2	SX(RS)	I	51.2	32.3	0.5	1436.7	1436.7	14.1	14.1
				J	51.2	32.3	0.5	1658.5	1658.5	10.9	10.9
			SY(RS)	I	17.3	27.4	63.0	302.7	302.7	683.6	683.6
				J	17.3	27.4	63.0	104.7	104.7	227.9	227.9
			RC ENV~1 Max	I	8.4	11.9	-31.6	715.7	2157.8	338.6	1028.6
				J	8.4	25.4	30.8	838.7	2478.4	-575.5	1815.9
			Min	I	-98.5	-56.0	-213.4	-2157.8	-715.7	-1028.6	-338.6
				J	-98.5	-39.2	-95.1	-2478.4	-838.7	-1815.9	575.5
			RC ENV~2 Max	I	-23.8	-15.4	-78.7	-610.2	1469.1	-295.7	572.0
				J	-23.8	-4.9	-25.7	-684.0	1661.7	-673.6	1318.4
			Min	I	-72.0	-40.1	-155.1	-1469.1	610.2	-572.0	295.7
				J	-72.0	-13.1	-51.2	-1661.7	684.0	-1318.4	673.6
341	1	2	SX(RS)	I	51.2	0.1	0.5	1658.5	1658.5	10.9	10.9
				J	51.2	0.1	0.5	1658.7	1658.7	8.3	8.3
			SY(RS)	I	0.0	28.9	63.0	104.7	104.7	227.9	227.9
				J	0.0	28.9	63.0	104.7	104.7	227.9	227.9
			RC ENV~1 Max	I	8.4	22.1	30.8	838.7	2478.4	-575.5	1815.9
				J	8.4	35.6	93.3	838.3	2479.1	-582.1	1804.7
			Min	I	-98.5	-35.8	-95.1	-2478.4	-838.7	-1815.9	575.5
				J	-98.5	-22.2	-32.6	-2479.1	-838.3	-1804.7	582.1
			RC ENV~2 Max	I	-23.8	-4.9	-25.7	-684.0	1661.7	-673.6	1318.4
				J	-23.8	13.8	52.7	-681.6	1659.3	-668.2	1313.0
			Min	I	-72.0	-13.1	-51.2	-1661.7	684.0	-1318.4	673.6
				J	-72.0	5.6	27.2	-1659.3	681.6	-1313.0	668.2
342	1	2	SX(RS)	I	51.2	32.3	0.5	1658.7	1658.7	8.3	8.3
				J	51.2	32.3	0.5	1437.1	1437.1	7.0	7.0
			SY(RS)	I	17.3	27.4	63.0	104.7	104.7	227.9	227.9
				J	17.3	27.4	63.0	302.7	302.7	683.6	683.6
			RC ENV~1 Max	I	8.4	39.0	93.3	838.3	2479.1	-582.1	1804.7
				J	8.4	57.1	216.5	714.4	2159.8	319.0	1048.2
			Min	I	-98.5	-25.5	-32.6	-2479.1	-838.3	-1804.7	582.1
				J	-98.5	-12.0	29.8	-2159.8	-714.4	-1048.2	-319.0
			RC ENV~2 Max	I	-23.8	13.8	52.7	-681.6	1659.3	-668.2	1313.0
				J	-23.8	40.7	156.6	-603.0	1461.9	-277.8	555.8
			Min	I	-72.0	5.6	27.2	-1659.3	681.6	-1313.0	668.2
				J	-72.0	16.1	80.2	-1461.9	603.0	-555.8	277.8

343	1	2	SX(RS)	I	51.2	63.8	0.5	1437.1	1437.1	7.0	7.0
				J	51.2	63.8	0.5	1016.3	1016.3	7.6	7.6
			SY(RS)	I	34.5	22.8	63.0	302.7	302.7	683.6	683.6
				J	34.5	22.8	63.0	467.7	467.7	1139.3	1139.3
			RC ENV~1 Max	I	8.4	84.0	216.5	714.4	2159.8	319.0	1048.2
				J	8.4	97.6	359.8	489.5	1543.0	1671.9	606.7
			Min	I	-98.5	-43.5	29.8	-2159.8	-714.4	-1048.2	-319.0
				J	-98.5	-29.9	92.2	-1543.0	-489.5	-606.7	-1671.9
			RC ENV~2 Max	I	-23.8	40.7	156.6	-603.0	1461.9	-277.8	555.8
				J	-23.8	67.7	260.4	-448.4	1069.5	953.3	-492.6
			Min	I	-72.0	16.1	80.2	-1461.9	603.0	-555.8	277.8
				J	-72.0	26.6	133.2	-1069.5	448.4	492.6	-953.3
344	1	2	SX(RS)	I	51.2	93.8	0.5	1016.3	1016.3	7.6	7.6
				J	51.2	93.8	0.5	541.4	541.4	9.8	9.8
			SY(RS)	I	51.8	16.1	63.0	467.7	467.7	1139.3	1139.3
				J	51.8	16.1	63.0	581.4	581.4	1595.0	1595.0
			RC ENV~1 Max	I	8.9	127.6	359.8	489.5	1543.0	1671.9	606.7
				J	8.9	141.2	503.2	348.8	814.0	4453.1	-286.7
			Min	I	-98.5	-59.9	92.2	-1543.0	-489.5	-606.7	-1671.9
				J	-98.5	-46.4	154.6	-814.0	-348.8	286.7	-4453.1
			RC ENV~2 Max	I	-23.8	67.7	260.4	-448.4	1069.5	953.3	-492.6
				J	-23.8	94.6	364.3	-217.6	482.1	3214.1	-1648.1
			Min	I	-72.0	26.6	133.2	-1069.5	448.4	492.6	-953.3
				J	-72.0	37.1	186.1	-482.1	217.6	1648.1	-3214.1
345	1	2	SX(RS)	I	50.9	24.3	3.9	621.6	621.6	33.9	33.9
				J	50.9	24.3	3.9	666.8	666.8	38.8	38.8
			SY(RS)	I	58.1	48.7	88.0	957.5	957.5	1302.0	1302.0
				J	58.1	48.7	88.0	1283.7	1283.7	672.3	672.3
			RC ENV~1 Max	I	12.5	34.4	-86.2	572.1	1342.9	1830.6	773.3
				J	12.5	48.0	-23.8	844.0	1723.4	166.0	1178.6
			Min	I	-108.2	-63.0	-410.6	-1342.9	-572.1	-773.3	-1830.6
				J	-108.2	-49.4	-267.3	-1723.4	-844.0	-1178.6	-166.0
			RC ENV~2 Max	I	-28.1	-12.2	-151.3	-344.3	763.2	980.1	-513.3
				J	-28.1	1.7	-98.4	-394.7	848.7	-381.7	791.0
			Min	I	-78.6	-25.3	-296.6	-763.2	344.3	513.3	-980.1
				J	-78.6	-1.7	-192.8	-848.7	394.7	-791.0	381.7
346	1	2	SX(RS)	I	50.8	20.2	3.9	666.8	666.8	38.8	38.8
				J	50.8	20.2	3.9	602.2	602.2	58.4	58.4
			SY(RS)	I	55.0	43.2	88.0	1283.7	1283.7	672.3	672.3
				J	55.0	43.2	88.0	1556.6	1556.6	140.8	140.8
			RC ENV~1 Max	I	9.3	42.5	-23.8	844.0	1723.4	166.0	1178.6
				J	9.3	56.0	38.6	1160.8	1952.3	-948.7	2494.9
			Min	I	-108.2	-43.9	-267.3	-1723.4	-844.0	-1178.6	-166.0
				J	-108.2	-30.3	-137.3	-1952.3	-1160.8	-2494.9	948.7
			RC ENV~2 Max	I	-28.1	1.7	-98.4	-394.7	848.7	-381.7	791.0
				J	-28.1	28.6	-45.4	-368.9	739.2	-902.3	1810.2
			Min	I	-78.6	-1.7	-192.8	-848.7	394.7	-791.0	381.7
				J	-78.6	8.8	-88.9	-739.2	368.9	-1810.2	902.3
347	1	2	SX(RS)	I	50.8	34.6	3.9	602.2	602.2	58.4	58.4
				J	50.8	34.6	3.9	456.5	456.5	82.9	82.9
			SY(RS)	I	57.1	40.3	88.0	1556.6	1556.6	140.8	140.8
				J	57.1	40.3	88.0	1785.0	1785.0	631.4	631.4
			RC ENV~1 Max	I	11.5	53.1	38.6	1160.8	1952.3	-948.7	2494.9
				J	11.5	78.0	101.1	1531.4	2038.6	-589.4	2873.8
			Min	I	-108.2	-27.4	-137.3	-1952.3	-1160.8	-2494.9	948.7
				J	-108.2	-13.8	-74.9	-2038.6	-1531.4	-2873.8	589.4
			RC ENV~2 Max	I	-28.1	28.6	-45.4	-368.9	739.2	-902.3	1810.2
				J	-28.1	55.5	15.0	-252.2	443.2	-1039.4	2077.7
			Min	I	-78.6	8.8	-88.9	-739.2	368.9	-1810.2	902.3
				J	-78.6	19.3	5.5	-443.2	252.2	-2077.7	1039.4

348	1	2	SX(RS)	I	50.8	51.7	3.9	456.5	456.5	82.9	82.9
				J	50.8	51.7	3.9	417.0	417.0	109.1	109.1
			SY(RS)	I	64.0	39.9	88.0	1785.0	1785.0	631.4	631.4
				J	64.0	39.9	88.0	1984.4	1984.4	1260.3	1260.3
			RC ENV~1 Max	I	18.3	78.2	101.1	1531.4	2038.6	-589.4	2873.8
				J	18.3	115.7	163.5	1971.2	1997.6	360.2	2215.4
			Min	I	-109.6	-25.3	-74.9	-2038.6	-1531.4	-2873.8	589.4
				J	-109.6	-11.7	-12.5	-1997.6	-1971.2	-2215.4	-360.2
			RC ENV~2 Max	I	-28.1	55.5	15.0	-252.2	443.2	-1039.4	2077.7
				J	-28.1	82.5	118.9	70.7	89.0	-793.1	1593.3
			Min	I	-78.6	19.3	5.5	-443.2	252.2	-2077.7	1039.4
				J	-78.6	29.9	60.5	-89.0	-70.7	-1593.3	793.1
349	1	2	SX(RS)	I	50.8	68.0	3.9	417.0	417.0	109.1	109.1
				J	50.8	68.0	3.9	727.7	727.7	136.0	136.0
			SY(RS)	I	74.3	40.9	88.0	1984.4	1984.4	1260.3	1260.3
				J	74.3	40.9	88.0	2173.3	2173.3	1894.5	1894.5
			RC ENV~1 Max	I	28.6	115.7	163.5	1971.2	1997.6	360.2	2215.4
				J	28.6	153.4	305.9	2498.8	1847.9	1766.8	2022.2
			Min	I	-119.9	-28.0	-12.5	-1997.6	-1971.2	-2215.4	-360.2
				J	-119.9	-14.4	50.0	-1847.9	-2498.8	-2022.2	-1766.8
			RC ENV~2 Max	I	-28.1	82.5	118.9	70.7	89.0	-793.1	1593.3
				J	-28.1	109.4	222.7	759.3	-165.1	-122.2	357.1
			Min	I	-78.6	29.9	60.5	-89.0	-70.7	-1593.3	793.1
				J	-78.6	40.4	113.5	165.1	-759.3	-357.1	122.2
350	1	2	SX(RS)	I	50.7	82.8	3.9	727.7	727.7	136.0	136.0
				J	50.7	82.8	3.9	1260.7	1260.7	163.2	163.2
			SY(RS)	I	86.8	41.8	88.0	2173.3	2173.3	1894.5	1894.5
				J	86.8	41.8	88.0	2369.4	2369.4	2530.0	2530.0
			RC ENV~1 Max	I	41.2	153.4	305.9	2498.8	1847.9	1766.8	2022.2
				J	41.2	191.1	449.3	3131.8	1607.1	3626.6	1433.4
			Min	I	-132.4	-29.2	50.0	-1847.9	-2498.8	-2022.2	-1766.8
				J	-132.4	-15.6	112.4	-1607.1	-3131.8	-1433.4	-3626.6
			RC ENV~2 Max	I	-28.1	109.4	222.7	759.3	-165.1	-122.2	357.1
				J	-28.1	136.4	326.6	1648.8	-495.4	1630.9	-845.0
			Min	I	-78.6	40.4	113.5	165.1	-759.3	-357.1	122.2
				J	-78.6	50.9	166.4	495.4	-1648.8	845.0	-1630.9
681	1	2	SX(RS)	I	0.0	263.8	0.0	6694.7	6694.7	0.0	0.0
				J	0.0	263.8	0.0	4826.2	4826.2	0.0	0.0
			SY(RS)	I	174.7	0.0	185.5	0.3	0.3	5408.6	5408.6
				J	174.7	0.0	185.5	0.2	0.2	4065.7	4065.7
			RC ENV~1 Max	I	167.8	264.0	-140.8	6705.5	6683.9	6956.6	3860.5
				J	167.8	264.0	-36.3	4838.8	4813.6	3630.2	4501.2
			Min	I	-181.6	-263.5	-774.9	-6683.9	-6705.5	-3860.5	-6956.6
				J	-181.6	-263.5	-526.9	-4813.6	-4838.8	-4501.2	-3630.2
			RC ENV~2 Max	I	-4.0	53.5	-308.2	1052.9	961.7	2642.9	-1443.2
				J	-4.0	45.6	-209.1	694.0	602.9	-428.9	763.2
			Min	I	-7.8	-53.5	-560.2	-961.7	-1052.9	1443.2	-2642.9
				J	-7.8	-45.7	-380.9	-602.9	-694.0	-763.2	428.9
682	1	2	SX(RS)	I	0.0	185.8	0.0	3164.8	3164.8	0.0	0.0
				J	0.0	185.8	0.0	4506.0	4506.0	0.0	0.0
			SY(RS)	I	95.8	0.0	114.7	0.5	0.5	2906.5	2906.5
				J	95.8	0.0	114.7	0.4	0.4	2076.1	2076.1
			RC ENV~1 Max	I	91.4	185.2	-254.6	3188.3	3141.2	7783.3	-437.1
				J	91.4	185.2	-150.1	4525.2	4486.8	3124.6	1027.6
			Min	I	-100.2	-186.4	-870.5	-3141.2	-3188.3	437.1	-7783.3
				J	-100.2	-186.4	-622.5	-4486.8	-4525.2	-1027.6	-3124.6
			RC ENV~2 Max	I	2.1	26.3	-348.8	352.9	263.2	5637.4	-3146.2
				J	2.1	18.4	-249.7	514.6	443.3	1728.3	-980.1
			Min	I	-4.8	-28.8	-629.7	-263.2	-352.9	3146.2	-5637.4

				J	-4.8	-21.0	-450.4	-443.3	-514.6	980.1	-1728.3
683	1	2	SX(RS)	I	0.0	100.8	0.0	3165.7	3165.7	0.0	0.0
				J	0.0	100.8	0.0	2475.4	2475.4	0.0	0.0
			SY(RS)	I	26.8	0.0	185.5	0.5	0.5	3991.8	3991.8
				J	26.8	0.0	185.5	0.6	0.6	2649.0	2649.0
			RC ENV~1 Max	I	17.6	100.4	-216.4	3159.0	3172.5	8311.6	537.5
				J	17.6	100.4	-111.9	2465.1	2485.6	3572.1	1725.9
			Min	I	-36.0	-101.3	-959.1	-3172.5	-3159.0	-537.5	-8311.6
				J	-36.0	-101.3	-711.0	-2485.6	-2465.1	-1725.9	-3572.1
			RC ENV~2 Max	I	-4.6	0.5	-382.9	288.6	327.9	5995.4	-3333.1
				J	-4.6	5.2	-283.9	264.0	318.5	1630.2	-913.4
			Min	I	-9.6	-2.6	-692.8	-327.9	-288.6	3333.1	-5995.4
				J	-9.6	-7.3	-513.4	-318.5	-264.0	913.4	-1630.2
684	1	2	SX(RS)	I	0.0	250.2	0.0	4826.2	4826.2	0.0	0.0
				J	0.0	250.2	0.0	3050.7	3050.7	0.0	0.0
			SY(RS)	I	143.1	0.0	185.5	0.2	0.2	4065.7	4065.7
				J	143.1	0.0	185.5	0.3	0.3	2722.8	2722.8
			RC ENV~1 Max	I	136.2	250.5	-36.3	4838.8	4813.6	3630.2	4501.2
				J	136.2	250.5	68.2	3065.1	3036.3	1060.2	4385.5
			Min	I	-150.0	-250.0	-526.9	-4813.6	-4838.8	-4501.2	-3630.2
				J	-150.0	-250.0	-302.8	-3036.3	-3065.1	-4385.5	-1060.2
			RC ENV~2 Max	I	-4.0	45.6	-209.1	694.0	602.9	-428.9	763.2
				J	-4.0	37.8	-110.1	392.0	301.1	-1584.1	2871.6
			Min	I	-7.8	-45.7	-380.9	-602.9	-694.0	-763.2	428.9
				J	-7.8	-37.8	-201.6	-301.1	-392.0	-2871.6	1584.1
685	1	2	SX(RS)	I	0.0	232.6	0.0	3050.7	3050.7	0.0	0.0
				J	0.0	232.6	0.0	1418.7	1418.7	0.0	0.0
			SY(RS)	I	111.6	0.0	185.5	0.3	0.3	2722.8	2722.8
				J	111.6	0.0	185.5	0.5	0.5	1380.1	1380.1
			RC ENV~1 Max	I	104.7	232.9	68.2	3065.1	3036.3	1060.2	4385.5
				J	104.7	232.9	172.7	1435.0	1402.5	-753.4	5097.5
			Min	I	-118.5	-232.4	-302.8	-3036.3	-3065.1	-4385.5	-1060.2
				J	-118.5	-232.4	-198.3	-1402.5	-1435.0	-5097.5	753.4
			RC ENV~2 Max	I	-4.0	37.8	-110.1	392.0	301.1	-1584.1	2871.6
				J	-4.0	29.9	-10.4	146.9	56.3	-2022.6	3682.1
			Min	I	-7.8	-37.8	-201.6	-301.1	-392.0	-2871.6	1584.1
				J	-7.8	-29.9	-22.3	-56.3	-146.9	-3682.1	2022.6
686	1	2	SX(RS)	I	0.0	209.5	0.0	1418.7	1418.7	0.0	0.0
				J	0.0	209.5	0.0	432.8	432.8	0.0	0.0
			SY(RS)	I	80.4	0.0	185.5	0.5	0.5	1380.1	1380.1
				J	80.4	0.0	185.5	0.6	0.6	46.1	46.1
			RC ENV~1 Max	I	73.6	209.8	172.7	1435.0	1402.5	-753.4	5097.5
				J	73.6	209.8	277.2	450.8	414.7	-1801.7	4422.5
			Min	I	-87.3	-209.3	-198.3	-1402.5	-1435.0	-5097.5	753.4
				J	-87.3	-209.3	-93.8	-414.7	-450.8	-4422.5	1801.7
			RC ENV~2 Max	I	-4.0	29.9	-10.4	146.9	56.3	-2022.6	3682.1
				J	-4.0	22.0	157.0	131.5	41.1	-1744.3	3194.8
			Min	I	-7.8	-29.9	-22.3	-56.3	-146.9	-3682.1	2022.6
				J	-7.8	-22.0	88.0	-41.1	-131.5	-3194.8	1744.3
687	1	2	SX(RS)	I	0.0	179.9	0.0	432.8	432.8	0.0	0.0
				J	0.0	179.9	0.0	1484.0	1484.0	0.0	0.0
			SY(RS)	I	50.2	0.0	185.5	0.6	0.6	46.1	46.1
				J	50.2	0.0	185.5	0.6	0.6	1306.3	1306.3
			RC ENV~1 Max	I	43.3	180.1	277.2	450.8	414.7	-1801.7	4422.5
				J	43.3	180.1	465.4	1503.9	1464.1	500.4	2112.2
			Min	I	-57.0	-179.6	-93.8	-414.7	-450.8	-4422.5	1801.7
				J	-57.0	-179.6	10.7	-1464.1	-1503.9	-2112.2	-500.4
			RC ENV~2 Max	I	-4.0	22.0	157.0	131.5	41.1	-1744.3	3194.8
				J	-4.0	14.1	336.3	262.3	172.2	-749.2	1409.7

			Min	I	-7.8	-22.0	88.0	-41.1	-131.5	-3194.8	1744.3
				J	-7.8	-14.2	187.0	-172.2	-262.3	-1409.7	749.2
688	1	2	SX(RS)	I	0.0	143.4	0.0	1484.0	1484.0	0.0	0.0
				J	0.0	143.4	0.0	2477.6	2477.6	0.0	0.0
			SY(RS)	I	24.5	0.0	185.5	0.6	0.6	1306.3	1306.3
				J	24.5	0.0	185.5	0.6	0.6	2649.0	2649.0
			RC ENV~1 Max	I	17.6	143.6	465.4	1503.9	1464.1	500.4	2112.2
				J	17.6	143.6	713.4	2499.3	2455.9	3641.5	1656.6
			Min	I	-31.3	-143.1	10.7	-1464.1	-1503.9	-2112.2	-500.4
				J	-31.3	-143.1	115.2	-2455.9	-2499.3	-1656.6	-3641.5
			RC ENV~2 Max	I	-4.0	14.1	336.3	262.3	172.2	-749.2	1409.7
				J	-4.0	6.3	515.6	336.2	246.3	1673.2	-962.8
			Min	I	-7.8	-14.2	187.0	-172.2	-262.3	-1409.7	749.2
				J	-7.8	-6.3	286.0	-246.3	-336.2	962.8	-1673.2
689	1	2	SX(RS)	I	0.0	100.8	0.0	2477.6	2477.6	0.0	0.0
				J	0.0	100.8	0.0	3167.2	3167.2	0.0	0.0
			SY(RS)	I	26.8	0.0	185.5	0.6	0.6	2649.0	2649.0
				J	26.8	0.0	185.5	0.5	0.5	3991.8	3991.8
			RC ENV~1 Max	I	19.9	101.0	713.4	2499.3	2455.9	3641.5	1656.6
				J	19.9	101.0	961.5	3190.7	3143.6	8375.5	444.7
			Min	I	-33.7	-100.5	115.2	-2455.9	-2499.3	-1656.6	-3641.5
				J	-33.7	-100.5	219.7	-3143.6	-3190.7	-444.7	-8375.5
			RC ENV~2 Max	I	-4.0	6.3	515.6	336.2	246.3	1673.2	-962.8
				J	-4.0	1.6	694.9	353.1	263.4	6053.9	-3391.5
			Min	I	-7.8	-6.3	286.0	-246.3	-336.2	962.8	-1673.2
				J	-7.8	-1.6	385.1	-263.4	-353.1	3391.5	-6053.9
690	1	2	SX(RS)	I	0.0	127.4	0.0	4506.0	4506.0	0.0	0.0
				J	0.0	127.4	0.0	5426.4	5426.4	0.0	0.0
			SY(RS)	I	63.9	0.0	114.7	0.4	0.4	2076.1	2076.1
				J	63.9	0.0	114.7	0.3	0.3	1245.6	1245.6
			RC ENV~1 Max	I	59.5	126.8	-150.1	4525.2	4486.8	3124.6	1027.6
				J	59.5	126.8	-45.6	5441.3	5411.5	755.4	1735.9
			Min	I	-68.2	-128.0	-622.5	-4486.8	-4525.2	-1027.6	-3124.6
				J	-68.2	-128.0	-374.4	-5411.5	-5441.3	-1735.9	-755.4
			RC ENV~2 Max	I	2.1	18.4	-249.7	514.6	443.3	1728.3	-980.1
				J	2.1	10.5	-150.7	619.3	566.5	-469.2	883.0
			Min	I	-4.8	-21.0	-450.4	-443.3	-514.6	980.1	-1728.3
				J	-4.8	-13.1	-271.1	-566.5	-619.3	-883.0	469.2
691	1	2	SX(RS)	I	0.0	64.8	0.0	5426.4	5426.4	0.0	0.0
				J	0.0	64.8	0.0	5894.6	5894.6	0.0	0.0
			SY(RS)	I	31.9	0.0	114.7	0.3	0.3	1245.6	1245.6
				J	31.9	0.0	114.7	0.1	0.1	415.2	415.2
			RC ENV~1 Max	I	27.6	64.2	-45.6	5441.3	5411.5	755.4	1735.9
				J	27.6	64.2	58.9	5905.1	5884.0	-857.4	3039.6
			Min	I	-36.3	-65.4	-374.4	-5411.5	-5441.3	-1735.9	-755.4
				J	-36.3	-65.4	-170.6	-5884.0	-5905.1	-3039.6	857.4
			RC ENV~2 Max	I	2.1	10.5	-150.7	619.3	566.5	-469.2	883.0
				J	2.1	2.7	-51.7	667.1	632.7	-1201.6	2196.5
			Min	I	-4.8	-13.1	-271.1	-566.5	-619.3	-883.0	469.2
				J	-4.8	-5.2	-91.8	-632.7	-667.1	-2196.5	1201.6
692	1	2	SX(RS)	I	0.0	0.5	0.0	5894.6	5894.6	0.0	0.0
				J	0.0	0.5	0.0	5894.4	5894.4	0.0	0.0
			SY(RS)	I	0.0	0.0	114.7	0.1	0.1	415.2	415.2
				J	0.0	0.0	114.7	0.1	0.1	415.2	415.2
			RC ENV~1 Max	I	4.4	4.0	58.9	5905.1	5884.0	-857.4	3039.6
				J	4.4	4.0	163.4	5900.6	5888.2	-883.4	3056.4
			Min	I	-4.9	-7.8	-170.6	-5884.0	-5905.1	-3039.6	857.4
				J	-4.9	-7.8	-66.1	-5888.2	-5900.6	-3056.4	883.4
			RC ENV~2 Max	I	2.1	2.7	-51.7	667.1	632.7	-1201.6	2196.5

				J	2.1	2.7	87.5	657.9	641.9	-1217.3	2212.2
			Min	I	-4.8	-5.2	-91.8	-632.7	-667.1	-2196.5	1201.6
				J	-4.8	-5.2	47.3	-641.9	-657.9	-2212.2	1217.3
693	1	2	SX(RS)	I	0.0	64.8	0.0	5894.4	5894.4	0.0	0.0
				J	0.0	64.8	0.0	5425.9	5425.9	0.0	0.0
			SY(RS)	I	31.9	0.0	114.7	0.1	0.1	415.2	415.2
				J	31.9	0.0	114.7	0.3	0.3	1245.6	1245.6
			RC ENV~1 Max	I	27.6	64.2	163.4	5900.6	5888.2	-883.4	3056.4
				J	27.6	64.2	369.8	5427.8	5424.0	677.4	1813.9
			Min	I	-36.3	-65.4	-66.1	-5888.2	-5900.6	-3056.4	883.4
				J	-36.3	-65.4	38.4	-5424.0	-5427.8	-1813.9	-677.4
			RC ENV~2 Max	I	2.1	2.7	87.5	657.9	641.9	-1217.3	2212.2
				J	2.1	10.5	266.8	591.7	594.1	-508.6	930.1
			Min	I	-4.8	-5.2	47.3	-641.9	-657.9	-2212.2	1217.3
				J	-4.8	-13.1	146.4	-594.1	-591.7	-930.1	508.6
694	1	2	SX(RS)	I	0.0	127.4	0.0	5425.9	5425.9	0.0	0.0
				J	0.0	127.4	0.0	4505.1	4505.1	0.0	0.0
			SY(RS)	I	63.9	0.0	114.7	0.3	0.3	1245.6	1245.6
				J	63.9	0.0	114.7	0.4	0.4	2076.1	2076.1
			RC ENV~1 Max	I	59.5	126.8	369.8	5427.8	5424.0	677.4	1813.9
				J	59.5	126.8	617.8	4502.7	4507.6	2994.6	1157.5
			Min	I	-68.2	-128.0	38.4	-5424.0	-5427.8	-1813.9	-677.4
				J	-68.2	-128.0	142.9	-4507.6	-4502.7	-1157.5	-2994.6
			RC ENV~2 Max	I	2.1	10.5	266.8	591.7	594.1	-508.6	930.1
				J	2.1	18.4	446.1	468.5	489.4	1649.9	-901.7
			Min	I	-4.8	-13.1	146.4	-594.1	-591.7	-930.1	508.6
				J	-4.8	-21.0	245.4	-489.4	-468.5	901.7	-1649.9
695	1	2	SX(RS)	I	0.0	185.8	0.0	4505.1	4505.1	0.0	0.0
				J	0.0	185.8	0.0	3163.3	3163.3	0.0	0.0
			SY(RS)	I	95.8	0.0	114.7	0.4	0.4	2076.1	2076.1
				J	95.8	0.0	114.7	0.5	0.5	2906.5	2906.5
			RC ENV~1 Max	I	91.4	185.2	617.8	4502.7	4507.6	2994.6	1157.5
				J	91.4	185.2	865.9	3156.6	3170.1	7665.9	-255.2
			Min	I	-100.2	-186.4	142.9	-4507.6	-4502.7	-1157.5	-2994.6
				J	-100.2	-186.4	247.4	-3170.1	-3156.6	255.2	-7665.9
			RC ENV~2 Max	I	2.1	18.4	446.1	468.5	489.4	1649.9	-901.7
				J	2.1	26.3	625.4	288.3	327.7	5527.6	-3036.4
			Min	I	-4.8	-21.0	245.4	-489.4	-468.5	901.7	-1649.9
				J	-4.8	-28.8	344.4	-327.7	-288.3	3036.4	-5527.6
696	1	2	SX(RS)	I	0.0	143.4	0.0	2475.4	2475.4	0.0	0.0
				J	0.0	143.4	0.0	1480.7	1480.7	0.0	0.0
			SY(RS)	I	24.5	0.0	185.5	0.6	0.6	2649.0	2649.0
				J	24.5	0.0	185.5	0.6	0.6	1306.3	1306.3
			RC ENV~1 Max	I	15.3	142.9	-111.9	2465.1	2485.6	3572.1	1725.9
				J	15.3	142.9	-7.4	1466.9	1494.5	454.5	2158.0
			Min	I	-33.7	-143.9	-711.0	-2485.6	-2465.1	-1725.9	-3572.1
				J	-33.7	-143.9	-463.0	-1494.5	-1466.9	-2158.0	-454.5
			RC ENV~2 Max	I	-4.6	5.2	-283.9	264.0	318.5	1630.2	-913.4
				J	-4.6	13.1	-184.9	182.4	252.1	-774.1	1437.3
			Min	I	-9.6	-7.3	-513.4	-318.5	-264.0	913.4	-1630.2
				J	-9.6	-15.2	-334.1	-252.1	-182.4	-1437.3	774.1
697	1	2	SX(RS)	I	0.0	179.9	0.0	1480.7	1480.7	0.0	0.0
				J	0.0	179.9	0.0	425.1	425.1	0.0	0.0
			SY(RS)	I	50.2	0.0	185.5	0.6	0.6	1306.3	1306.3
				J	50.2	0.0	185.5	0.6	0.6	46.1	46.1
			RC ENV~1 Max	I	40.9	179.4	-7.4	1466.9	1494.5	454.5	2158.0
				J	40.9	179.4	97.1	407.8	442.5	-1824.1	4434.7
			Min	I	-59.4	-180.4	-463.0	-1494.5	-1466.9	-2158.0	-454.5
				J	-59.4	-180.4	-274.0	-442.5	-407.8	-4434.7	1824.1

			RC ENV~2 Max	I	-4.6	13.1	-184.9	182.4	252.1	-774.1	1437.3
				J	-4.6	21.0	-85.8	43.9	128.7	-1756.4	3207.0
			Min	I	-9.6	-15.2	-334.1	-252.1	-182.4	-1437.3	774.1
				J	-9.6	-23.1	-154.8	-128.7	-43.9	-3207.0	1756.4
698	1	2	SX(RS)	I	0.0	209.5	0.0	425.1	425.1	0.0	0.0
				J	0.0	209.5	0.0	1417.6	1417.6	0.0	0.0
			SY(RS)	I	80.4	0.0	185.5	0.6	0.6	46.1	46.1
				J	80.4	0.0	185.5	0.5	0.5	1380.1	1380.1
			RC ENV~1 Max	I	71.2	209.0	97.1	407.8	442.5	-1824.1	4434.7
				J	71.2	209.0	201.6	1396.7	1438.4	-752.2	5092.6
			Min	I	-89.6	-210.0	-274.0	-442.5	-407.8	-4434.7	1824.1
				J	-89.6	-210.0	-169.5	-1438.4	-1396.7	-5092.6	752.2
			RC ENV~2 Max	I	-4.6	21.0	-85.8	43.9	128.7	-1756.4	3207.0
				J	-4.6	28.9	24.5	51.6	151.6	-2019.3	3678.8
			Min	I	-9.6	-23.1	-154.8	-128.7	-43.9	-3207.0	1756.4
				J	-9.6	-31.0	11.7	-151.6	-51.6	-3678.8	2019.3
699	1	2	SX(RS)	I	0.0	232.6	0.0	1417.6	1417.6	0.0	0.0
				J	0.0	232.6	0.0	3050.3	3050.3	0.0	0.0
			SY(RS)	I	111.6	0.0	185.5	0.5	0.5	1380.1	1380.1
				J	111.6	0.0	185.5	0.3	0.3	2722.8	2722.8
			RC ENV~1 Max	I	102.4	232.1	201.6	1396.7	1438.4	-752.2	5092.6
				J	102.4	232.1	306.1	3025.8	3074.7	1084.9	4360.8
			Min	I	-120.8	-233.1	-169.5	-1438.4	-1396.7	-5092.6	752.2
				J	-120.8	-233.1	-65.0	-3074.7	-3025.8	-4360.8	-1084.9
			RC ENV~2 Max	I	-4.6	28.9	24.5	51.6	151.6	-2019.3	3678.8
				J	-4.6	36.7	203.8	288.9	404.2	-1565.5	2852.9
			Min	I	-9.6	-31.0	11.7	-151.6	-51.6	-3678.8	2019.3
				J	-9.6	-38.8	112.2	-404.2	-288.9	-2852.9	1565.5
700	1	2	SX(RS)	I	0.0	250.2	0.0	3050.3	3050.3	0.0	0.0
				J	0.0	250.2	0.0	4825.6	4825.6	0.0	0.0
			SY(RS)	I	143.1	0.0	185.5	0.3	0.3	2722.8	2722.8
				J	143.1	0.0	185.5	0.2	0.2	4065.7	4065.7
			RC ENV~1 Max	I	133.9	249.7	306.1	3025.8	3074.7	1084.9	4360.8
				J	133.9	249.7	529.2	4797.6	4853.5	3678.4	4453.0
			Min	I	-152.3	-250.7	-65.0	-3074.7	-3025.8	-4360.8	-1084.9
				J	-152.3	-250.7	39.5	-4853.5	-4797.6	-4453.0	-3678.4
			RC ENV~2 Max	I	-4.6	36.7	203.8	288.9	404.2	-1565.5	2852.9
				J	-4.6	44.6	383.1	583.2	713.6	-381.1	729.1
			Min	I	-9.6	-38.8	112.2	-404.2	-288.9	-2852.9	1565.5
				J	-9.6	-46.7	211.3	-713.6	-583.2	-729.1	381.1
701	1	2	SX(RS)	I	0.0	263.8	0.0	4825.6	4825.6	0.0	0.0
				J	0.0	263.8	0.0	6693.7	6693.7	0.0	0.0
			SY(RS)	I	174.7	0.0	185.5	0.2	0.2	4065.7	4065.7
				J	174.7	0.0	185.5	0.3	0.3	5408.5	5408.5
			RC ENV~1 Max	I	165.5	263.3	529.2	4797.6	4853.5	3678.4	4453.0
				J	165.5	263.3	777.3	6662.2	6725.2	7028.3	3788.8
			Min	I	-183.9	-264.2	39.5	-4853.5	-4797.6	-4453.0	-3678.4
				J	-183.9	-264.2	144.0	-6725.2	-6662.2	-3788.8	-7028.3
			RC ENV~2 Max	I	-4.6	44.6	383.1	583.2	713.6	-381.1	729.1
				J	-4.6	52.5	562.4	934.5	1080.1	2692.5	-1480.0
			Min	I	-9.6	-46.7	211.3	-713.6	-583.2	-729.1	381.1
				J	-9.6	-54.6	310.3	-1080.1	-934.5	1480.0	-2692.5

BEAM ELEMENT STRESSES MIN/MAX SUMMARY BY PROPERTY PRINTOUT Unit System : kN , m

[SECTION NAME : Pilastri 30x30 , SECTION ID : 1 , SECTION SHAPE : SB]
[SECTION SIZE] H:0.3 B:0.3
** MAX

ELEM	COM	LC	PT	AXIAL	SHEAR-y	SHEAR-Z	(+y)-BENDING	-(-y)	(+z)-BENDING	-(-z)
258	AXL	SY(RS) 1	J	130.9	194.6	0.0	6583.3	6583.3	0.6	0.6
266	SHY	RC ENV~1 1	I	-602.3	261.5	182.0	6173.5	6181.2	6934.1	6850.6
245	SHZ	RC ENV~1 1	J	-391.3	194.4	262.7	4140.5	4206.1	8684.7	3554.7
266	BY+	RC ENV~1 1	J	-614.8	261.5	182.0	7916.6	7874.3	8147.1	8052.3
274	BY-	RC ENV~1 1	J	-607.8	250.5	181.0	7752.6	8038.3	8095.1	8103.5
245	BZ+	RC ENV~1 1	J	-391.3	194.4	262.7	4140.5	4206.1	8684.7	3554.7
220	BZ-	RC ENV~1 1	J	-364.6	195.9	105.8	4033.4	4309.4	3514.1	8789.4

** MIN

ELEM	COM	LC	PT	AXIAL	SHEAR-y	SHEAR-Z	(+y)-BENDING	-(-y)	(+z)-BENDING	-(-z)
266	AXL	RC ENV~1 1	J	-1484.2	-254.0	-180.3	-7874.3	-7916.6	-8052.3	-8147.1
274	SHY	RC ENV~1 1	I	-1463.3	-265.0	-181.2	-6271.8	-6082.9	-6895.6	-6888.6
220	SHZ	RC ENV~1 1	J	-831.1	-201.0	-331.5	-4309.4	-4033.4	-8789.4	-3514.1
274	BY+	RC ENV~1 1	J	-1479.6	-265.0	-181.2	-8038.3	-7752.6	-8103.5	-8095.1
266	BY-	RC ENV~1 1	J	-1484.2	-254.0	-180.3	-7874.3	-7916.6	-8052.3	-8147.1
220	BZ+	RC ENV~1 1	J	-831.1	-201.0	-331.5	-4309.4	-4033.4	-8789.4	-3514.1
245	BZ-	RC ENV~1 1	J	-918.9	-202.7	-106.8	-4206.1	-4140.5	-3554.7	-8684.7

[SECTION NAME : Cordolo , SECTION ID : 2 , SECTION SHAPE : SB]
[SECTION SIZE] H:0.3 B:0.3
** MAX

ELEM	COM	LC	PT	AXIAL	SHEAR-y	SHEAR-Z	(+y)-BENDING	-(-y)	(+z)-BENDING	-(-z)
681	AXL	SY(RS) 1	I	174.7	0.0	185.5	0.3	0.3	5408.6	5408.6
681	SHY	RC ENV~1 1	I	167.8	264.0	-140.8	6705.5	6683.9	6956.6	3860.5
689	SHZ	RC ENV~1 1	J	19.9	101.0	961.5	3190.7	3143.6	8375.5	444.7
681	BY+	RC ENV~1 1	I	167.8	264.0	-140.8	6705.5	6683.9	6956.6	3860.5
701	BY-	RC ENV~1 1	J	165.5	263.3	777.3	6662.2	6725.2	7028.3	3788.8
689	BZ+	RC ENV~1 1	J	19.9	101.0	961.5	3190.7	3143.6	8375.5	444.7
681	BZ-	SY(RS) 1	I	174.7	0.0	185.5	0.3	0.3	5408.6	5408.6

** MIN

ELEM	COM	LC	PT	AXIAL	SHEAR-y	SHEAR-Z	(+y)-BENDING	-(-y)	(+z)-BENDING	-(-z)
298	AXL	RC ENV~1 1	J	-201.9	-95.6	-3.5	-1849.0	-3534.6	-2837.2	-3291.8
701	SHY	RC ENV~1 1	I	-183.9	-264.2	39.5	-4853.5	-4797.6	-4453.0	-3678.4
683	SHZ	RC ENV~1 1	I	-36.0	-101.3	-959.1	-3172.5	-3159.0	-537.5	-8311.6
701	BY+	RC ENV~1 1	J	-183.9	-264.2	144.0	-6725.2	-6662.2	-3788.8	-7028.3
681	BY-	RC ENV~1 1	I	-181.6	-263.5	-774.9	-6683.9	-6705.5	-3860.5	-6956.6
685	BZ+	RC ENV~1 1	J	-118.5	-232.4	-198.3	-1402.5	-1435.0	-5097.5	753.4
689	BZ-	RC ENV~1 1	J	-33.7	-100.5	219.7	-3143.6	-3190.7	-444.7	-8375.5

REACTION FORCES & MOMENTS DEFAULT PRINTOUT Unit System : kN , m

Node	LC		FX	FY	FZ	MX	MY	MZ
1	SX (RS)		0.1	0.0	0.2	0.0	0.0	0.0
	SY (RS)		0.0	0.1	0.1	0.0	0.0	0.0
	RC ENV~1	Max	0.1	0.1	3.4	0.0	0.0	0.0
		Min	-0.1	-0.1	1.9	0.0	0.0	0.0
	RC ENV~2	Max	0.0	0.0	2.5	0.0	0.0	0.0
		Min	-0.0	0.0	2.1	0.0	0.0	0.0
2	SX (RS)		0.1	0.0	0.2	0.0	0.0	0.0
	SY (RS)		0.0	0.1	0.1	0.0	0.0	0.0
	RC ENV~1	Max	0.1	0.1	3.3	0.0	0.0	0.0

	Min	-0.1	-0.1	1.9	0.0	0.0	0.0
RC ENV~2	Max	0.0	0.0	2.5	0.0	0.0	0.0
	Min	-0.0	0.0	2.1	0.0	0.0	0.0
3	SX (RS)	0.1	0.0	0.2	0.0	0.0	0.0
	SY (RS)	0.0	0.1	0.1	0.0	0.0	0.0
RC ENV~1	Max	0.1	0.1	4.1	0.0	0.0	0.0
	Min	-0.1	-0.1	2.0	0.0	0.0	0.0
RC ENV~2	Max	0.0	-0.0	3.0	0.0	0.0	0.0
	Min	-0.0	-0.0	2.2	0.0	0.0	0.0
4	SX (RS)	0.1	0.0	0.2	0.0	0.0	0.0
	SY (RS)	0.0	0.1	0.1	0.0	0.0	0.0
RC ENV~1	Max	0.1	0.1	3.1	0.0	0.0	0.0
	Min	-0.1	-0.1	1.8	0.0	0.0	0.0
RC ENV~2	Max	0.0	-0.0	2.3	0.0	0.0	0.0
	Min	-0.0	-0.0	2.0	0.0	0.0	0.0
5	SX (RS)	0.2	0.0	0.4	0.0	0.0	0.0
	SY (RS)	0.0	0.3	0.3	0.0	0.0	0.0
RC ENV~1	Max	0.2	0.3	13.2	0.0	0.0	0.0
	Min	-0.2	-0.3	8.0	0.0	0.0	0.0
RC ENV~2	Max	0.1	0.0	9.9	0.0	0.0	0.0
	Min	-0.1	0.0	8.4	0.0	0.0	0.0
6	SX (RS)	0.2	0.0	0.0	0.0	0.0	0.0
	SY (RS)	0.0	0.3	0.5	0.0	0.0	0.0
RC ENV~1	Max	0.2	0.3	12.7	0.0	0.0	0.0
	Min	-0.2	-0.3	7.6	0.0	0.0	0.0
RC ENV~2	Max	0.1	0.0	9.5	0.0	0.0	0.0
	Min	-0.1	0.0	8.0	0.0	0.0	0.0
7	SX (RS)	0.2	0.0	0.4	0.0	0.0	0.0
	SY (RS)	0.0	0.3	0.3	0.0	0.0	0.0
RC ENV~1	Max	0.2	0.3	13.2	0.0	0.0	0.0
	Min	-0.2	-0.3	7.9	0.0	0.0	0.0
RC ENV~2	Max	0.1	0.0	9.8	0.0	0.0	0.0
	Min	-0.1	0.0	8.4	0.0	0.0	0.0
8	SX (RS)	0.2	0.0	0.3	0.0	0.0	0.0
	SY (RS)	0.0	0.3	0.0	0.0	0.0	0.0
RC ENV~1	Max	0.2	0.3	13.1	0.0	0.0	0.0
	Min	-0.2	-0.3	8.1	0.0	0.0	0.0
RC ENV~2	Max	0.1	0.0	9.8	0.0	0.0	0.0
	Min	-0.1	-0.0	8.4	0.0	0.0	0.0
9	SX (RS)	0.2	0.0	0.0	0.0	0.0	0.0
	SY (RS)	0.0	0.3	0.0	0.0	0.0	0.0
RC ENV~1	Max	0.2	0.3	12.9	0.0	0.0	0.0
	Min	-0.2	-0.3	8.0	0.0	0.0	0.0
RC ENV~2	Max	0.1	0.0	9.6	0.0	0.0	0.0
	Min	-0.1	0.0	8.0	0.0	0.0	0.0
10	SX (RS)	0.2	0.0	0.3	0.0	0.0	0.0
	SY (RS)	0.0	0.3	0.0	0.0	0.0	0.0
RC ENV~1	Max	0.2	0.3	13.5	0.0	0.0	0.0
	Min	-0.2	-0.3	8.2	0.0	0.0	0.0
RC ENV~2	Max	0.1	0.0	10.1	0.0	0.0	0.0
	Min	-0.1	0.0	8.5	0.0	0.0	0.0
11	SX (RS)	0.2	0.0	0.3	0.0	0.0	0.0
	SY (RS)	0.0	0.3	0.0	0.0	0.0	0.0

	RC ENV~1	Max	0.2	0.3	12.4	0.0	0.0	0.0
		Min	-0.2	-0.3	7.7	0.0	0.0	0.0
	RC ENV~2	Max	0.1	-0.0	9.3	0.0	0.0	0.0
		Min	-0.1	-0.0	8.0	0.0	0.0	0.0
12	SX (RS)		0.2	0.0	0.0	0.0	0.0	0.0
	SY (RS)		0.0	0.3	0.0	0.0	0.0	0.0
	RC ENV~1	Max	0.2	0.3	13.3	0.0	0.0	0.0
		Min	-0.2	-0.3	7.8	0.0	0.0	0.0
	RC ENV~2	Max	0.1	-0.0	9.8	0.0	0.0	0.0
		Min	-0.1	-0.0	7.8	0.0	0.0	0.0
13	SX (RS)		0.2	0.0	0.3	0.0	0.0	0.0
	SY (RS)		0.0	0.3	0.0	0.0	0.0	0.0
	RC ENV~1	Max	0.2	0.3	14.6	0.0	0.0	0.0
		Min	-0.2	-0.3	8.3	0.0	0.0	0.0
	RC ENV~2	Max	0.1	0.0	10.7	0.0	0.0	0.0
		Min	-0.1	-0.0	8.5	0.0	0.0	0.0
14	SX (RS)		0.2	0.0	0.4	0.0	0.0	0.0
	SY (RS)		0.0	0.3	0.3	0.0	0.0	0.0
	RC ENV~1	Max	0.2	0.3	12.3	0.0	0.0	0.0
		Min	-0.2	-0.3	7.5	0.0	0.0	0.0
	RC ENV~2	Max	0.1	-0.0	9.2	0.0	0.0	0.0
		Min	-0.1	-0.0	7.9	0.0	0.0	0.0
15	SX (RS)		0.2	0.0	0.0	0.0	0.0	0.0
	SY (RS)		0.0	0.3	0.5	0.0	0.0	0.0
	RC ENV~1	Max	0.2	0.3	14.2	0.0	0.0	0.0
		Min	-0.2	-0.3	7.4	0.0	0.0	0.0
	RC ENV~2	Max	0.1	-0.0	10.4	0.0	0.0	0.0
		Min	-0.1	-0.0	7.9	0.0	0.0	0.0
16	SX (RS)		0.2	0.0	0.4	0.0	0.0	0.0
	SY (RS)		0.0	0.3	0.3	0.0	0.0	0.0
	RC ENV~1	Max	0.2	0.3	16.0	0.0	0.0	0.0
		Min	-0.2	-0.3	8.1	0.0	0.0	0.0
	RC ENV~2	Max	0.1	-0.0	11.6	0.0	0.0	0.0
		Min	-0.1	-0.0	8.6	0.0	0.0	0.0
17	SX (RS)		0.1	0.0	0.3	0.0	0.0	0.0
	SY (RS)		0.0	0.1	0.2	0.0	0.0	0.0
	RC ENV~1	Max	0.1	0.1	6.7	0.0	0.0	0.0
		Min	-0.1	-0.1	3.9	0.0	0.0	0.0
	RC ENV~2	Max	0.1	0.0	5.0	0.0	0.0	0.0
		Min	-0.1	0.0	4.2	0.0	0.0	0.0
18	SX (RS)		0.1	0.0	0.2	0.0	0.0	0.0
	SY (RS)		0.0	0.1	0.0	0.0	0.0	0.0
	RC ENV~1	Max	0.1	0.1	6.5	0.0	0.0	0.0
		Min	-0.1	-0.1	4.0	0.0	0.0	0.0
	RC ENV~2	Max	0.0	0.0	4.9	0.0	0.0	0.0
		Min	-0.1	-0.0	4.2	0.0	0.0	0.0
19	SX (RS)		0.1	0.0	0.2	0.0	0.0	0.0
	SY (RS)		0.0	0.1	0.0	0.0	0.0	0.0
	RC ENV~1	Max	0.1	0.1	6.1	0.0	0.0	0.0
		Min	-0.1	-0.1	3.8	0.0	0.0	0.0
	RC ENV~2	Max	0.0	0.0	4.6	0.0	0.0	0.0
		Min	-0.1	-0.0	4.0	0.0	0.0	0.0

20	SX (RS)	0.1	0.0	0.3	0.0	0.0	0.0
	SY (RS)	0.0	0.1	0.2	0.0	0.0	0.0
RC ENV~1	Max	0.1	0.1	6.0	0.0	0.0	0.0
	Min	-0.1	-0.1	3.6	0.0	0.0	0.0
RC ENV~2	Max	0.1	-0.0	4.5	0.0	0.0	0.0
	Min	-0.1	-0.0	4.0	0.0	0.0	0.0
21	SX (RS)	0.1	0.0	0.3	0.0	0.0	0.0
	SY (RS)	0.0	0.1	0.2	0.0	0.0	0.0
RC ENV~1	Max	0.1	0.1	6.6	0.0	0.0	0.0
	Min	-0.1	-0.1	3.9	0.0	0.0	0.0
RC ENV~2	Max	0.1	0.0	5.0	0.0	0.0	0.0
	Min	-0.1	0.0	4.2	0.0	0.0	0.0
22	SX (RS)	0.1	0.0	0.2	0.0	0.0	0.0
	SY (RS)	0.0	0.1	0.0	0.0	0.0	0.0
RC ENV~1	Max	0.1	0.1	6.7	0.0	0.0	0.0
	Min	-0.1	-0.1	4.0	0.0	0.0	0.0
RC ENV~2	Max	0.1	0.0	5.0	0.0	0.0	0.0
	Min	-0.0	-0.0	4.3	0.0	0.0	0.0
23	SX (RS)	0.1	0.0	0.2	0.0	0.0	0.0
	SY (RS)	0.0	0.1	0.0	0.0	0.0	0.0
RC ENV~1	Max	0.1	0.1	7.2	0.0	0.0	0.0
	Min	-0.1	-0.1	4.0	0.0	0.0	0.0
RC ENV~2	Max	0.1	0.0	5.3	0.0	0.0	0.0
	Min	-0.0	-0.0	4.3	0.0	0.0	0.0
24	SX (RS)	0.1	0.0	0.3	0.0	0.0	0.0
	SY (RS)	0.0	0.1	0.2	0.0	0.0	0.0
RC ENV~1	Max	0.1	0.1	8.0	0.0	0.0	0.0
	Min	-0.1	-0.1	4.0	0.0	0.0	0.0
RC ENV~2	Max	0.1	0.0	5.8	0.0	0.0	0.0
	Min	-0.1	-0.0	4.3	0.0	0.0	0.0
25	SX (RS)	0.1	0.0	0.2	0.0	0.0	0.0
	SY (RS)	0.0	0.1	0.3	0.0	0.0	0.0
RC ENV~1	Max	0.1	0.1	6.3	0.0	0.0	0.0
	Min	-0.1	-0.2	3.7	0.0	0.0	0.0
RC ENV~2	Max	0.1	-0.0	4.7	0.0	0.0	0.0
	Min	-0.1	-0.0	4.0	0.0	0.0	0.0
26	SX (RS)	0.1	0.0	0.0	0.0	0.0	0.0
	SY (RS)	0.0	0.1	0.4	0.0	0.0	0.0
RC ENV~1	Max	0.1	0.1	7.3	0.0	0.0	0.0
	Min	-0.1	-0.2	3.7	0.0	0.0	0.0
RC ENV~2	Max	0.1	-0.0	5.4	0.0	0.0	0.0
	Min	-0.1	-0.0	4.0	0.0	0.0	0.0
27	SX (RS)	0.1	0.0	0.2	0.0	0.0	0.0
	SY (RS)	0.0	0.1	0.3	0.0	0.0	0.0
RC ENV~1	Max	0.1	0.1	8.3	0.0	0.0	0.0
	Min	-0.1	-0.2	4.1	0.0	0.0	0.0
RC ENV~2	Max	0.1	-0.0	6.0	0.0	0.0	0.0
	Min	-0.1	-0.0	4.3	0.0	0.0	0.0
28	SX (RS)	0.1	0.0	0.2	0.0	0.0	0.0
	SY (RS)	0.0	0.1	0.3	0.0	0.0	0.0
RC ENV~1	Max	0.1	0.2	6.7	0.0	0.0	0.0
	Min	-0.1	-0.1	3.9	0.0	0.0	0.0
RC ENV~2	Max	0.1	0.0	5.0	0.0	0.0	0.0

	Min	-0.1	0.0	4.2	0.0	0.0	0.0
29	SX (RS)	0.1	0.0	0.0	0.0	0.0	0.0
	SY (RS)	0.0	0.1	0.4	0.0	0.0	0.0
RC ENV~1	Max	0.1	0.2	6.4	0.0	0.0	0.0
	Min	-0.1	-0.1	3.7	0.0	0.0	0.0
RC ENV~2	Max	0.1	0.0	4.8	0.0	0.0	0.0
	Min	-0.1	0.0	4.0	0.0	0.0	0.0
30	SX (RS)	0.1	0.0	0.2	0.0	0.0	0.0
	SY (RS)	0.0	0.1	0.3	0.0	0.0	0.0
RC ENV~1	Max	0.1	0.2	6.6	0.0	0.0	0.0
	Min	-0.1	-0.1	3.9	0.0	0.0	0.0
RC ENV~2	Max	0.1	0.0	4.9	0.0	0.0	0.0
	Min	-0.1	0.0	4.2	0.0	0.0	0.0
31	SX (RS)	0.2	0.0	0.6	0.0	0.0	0.0
	SY (RS)	0.0	0.3	0.3	0.0	0.0	0.0
RC ENV~1	Max	0.2	0.3	12.1	0.0	0.0	0.0
	Min	-0.2	-0.3	7.3	0.0	0.0	0.0
RC ENV~2	Max	0.1	-0.0	9.1	0.0	0.0	0.0
	Min	-0.1	-0.0	7.9	0.0	0.0	0.0
32	SX (RS)	0.1	0.0	0.4	0.0	0.0	0.0
	SY (RS)	0.0	0.1	0.2	0.0	0.0	0.0
RC ENV~1	Max	0.1	0.1	6.2	0.0	0.0	0.0
	Min	-0.1	-0.1	3.7	0.0	0.0	0.0
RC ENV~2	Max	0.1	-0.0	4.6	0.0	0.0	0.0
	Min	-0.1	-0.0	4.1	0.0	0.0	0.0
33	SX (RS)	0.2	0.0	0.6	0.0	0.0	0.0
	SY (RS)	0.0	0.3	0.5	0.0	0.0	0.0
RC ENV~1	Max	0.2	0.3	12.4	0.0	0.0	0.0
	Min	-0.2	-0.3	7.5	0.0	0.0	0.0
RC ENV~2	Max	0.1	-0.0	9.3	0.0	0.0	0.0
	Min	-0.1	-0.0	8.1	0.0	0.0	0.0
34	SX (RS)	0.2	0.0	0.4	0.0	0.0	0.0
	SY (RS)	0.0	0.3	0.5	0.0	0.0	0.0
RC ENV~1	Max	0.2	0.3	12.6	0.0	0.0	0.0
	Min	-0.2	-0.3	7.6	0.0	0.0	0.0
RC ENV~2	Max	0.1	-0.0	9.4	0.0	0.0	0.0
	Min	-0.1	-0.0	8.1	0.0	0.0	0.0
35	SX (RS)	0.1	0.0	0.3	0.0	0.0	0.0
	SY (RS)	0.0	0.1	0.3	0.0	0.0	0.0
RC ENV~1	Max	0.1	0.1	6.2	0.0	0.0	0.0
	Min	-0.1	-0.2	3.7	0.0	0.0	0.0
RC ENV~2	Max	0.1	-0.0	4.6	0.0	0.0	0.0
	Min	-0.1	-0.0	4.0	0.0	0.0	0.0
36	SX (RS)	0.2	0.0	0.6	0.0	0.0	0.0
	SY (RS)	0.0	0.3	0.3	0.0	0.0	0.0
RC ENV~1	Max	0.2	0.3	15.9	0.0	0.0	0.0
	Min	-0.2	-0.3	8.0	0.0	0.0	0.0
RC ENV~2	Max	0.1	-0.0	11.6	0.0	0.0	0.0
	Min	-0.1	-0.0	8.6	0.0	0.0	0.0
37	SX (RS)	0.2	0.0	0.4	0.0	0.0	0.0
	SY (RS)	0.0	0.3	0.5	0.0	0.0	0.0
RC ENV~1	Max	0.2	0.3	16.5	0.0	0.0	0.0
	Min	-0.2	-0.3	8.3	0.0	0.0	0.0

	RC ENV~2	Max	0.1	-0.0	12.0	0.0	0.0	0.0
		Min	-0.1	-0.0	8.7	0.0	0.0	0.0
38	SX (RS)		0.2	0.0	0.6	0.0	0.0	0.0
	SY (RS)		0.0	0.3	0.5	0.0	0.0	0.0
	RC ENV~1	Max	0.2	0.3	16.5	0.0	0.0	0.0
		Min	-0.2	-0.3	8.2	0.0	0.0	0.0
	RC ENV~2	Max	0.1	-0.0	12.0	0.0	0.0	0.0
		Min	-0.1	-0.0	8.8	0.0	0.0	0.0
39	SX (RS)		0.1	0.0	0.4	0.0	0.0	0.0
	SY (RS)		0.0	0.1	0.2	0.0	0.0	0.0
	RC ENV~1	Max	0.1	0.1	8.2	0.0	0.0	0.0
		Min	-0.1	-0.2	4.1	0.0	0.0	0.0
	RC ENV~2	Max	0.1	-0.0	6.0	0.0	0.0	0.0
		Min	-0.1	-0.0	4.4	0.0	0.0	0.0
40	SX (RS)		0.1	0.0	0.3	0.0	0.0	0.0
	SY (RS)		0.0	0.1	0.3	0.0	0.0	0.0
	RC ENV~1	Max	0.1	0.1	8.3	0.0	0.0	0.0
		Min	-0.1	-0.2	4.1	0.0	0.0	0.0
	RC ENV~2	Max	0.1	-0.0	6.0	0.0	0.0	0.0
		Min	-0.1	-0.0	4.3	0.0	0.0	0.0
41	SX (RS)		0.1	0.0	0.3	0.0	0.0	0.0
	SY (RS)		0.0	0.1	0.3	0.0	0.0	0.0
	RC ENV~1	Max	0.1	0.2	6.7	0.0	0.0	0.0
		Min	-0.1	-0.1	3.9	0.0	0.0	0.0
	RC ENV~2	Max	0.1	0.0	5.0	0.0	0.0	0.0
		Min	-0.1	0.0	4.2	0.0	0.0	0.0
42	SX (RS)		0.1	0.0	0.4	0.0	0.0	0.0
	SY (RS)		0.0	0.1	0.2	0.0	0.0	0.0
	RC ENV~1	Max	0.1	0.1	6.8	0.0	0.0	0.0
		Min	-0.1	-0.1	3.9	0.0	0.0	0.0
	RC ENV~2	Max	0.1	0.0	5.1	0.0	0.0	0.0
		Min	-0.1	0.0	4.3	0.0	0.0	0.0
43	SX (RS)		0.2	0.0	0.6	0.0	0.0	0.0
	SY (RS)		0.0	0.3	0.5	0.0	0.0	0.0
	RC ENV~1	Max	0.2	0.3	13.6	0.0	0.0	0.0
		Min	-0.2	-0.3	8.0	0.0	0.0	0.0
	RC ENV~2	Max	0.1	0.0	10.1	0.0	0.0	0.0
		Min	-0.1	0.0	8.5	0.0	0.0	0.0
44	SX (RS)		0.2	0.0	0.4	0.0	0.0	0.0
	SY (RS)		0.0	0.3	0.5	0.0	0.0	0.0
	RC ENV~1	Max	0.2	0.3	13.5	0.0	0.0	0.0
		Min	-0.2	-0.3	8.1	0.0	0.0	0.0
	RC ENV~2	Max	0.1	0.0	10.1	0.0	0.0	0.0
		Min	-0.1	0.0	8.5	0.0	0.0	0.0
45	SX (RS)		0.2	0.0	0.6	0.0	0.0	0.0
	SY (RS)		0.0	0.3	0.3	0.0	0.0	0.0
	RC ENV~1	Max	0.2	0.3	13.3	0.0	0.0	0.0
		Min	-0.2	-0.3	7.8	0.0	0.0	0.0
	RC ENV~2	Max	0.1	0.0	9.9	0.0	0.0	0.0
		Min	-0.1	0.0	8.4	0.0	0.0	0.0
46	SX (RS)		0.1	0.0	0.3	0.0	0.0	0.0
	SY (RS)		0.0	0.1	0.3	0.0	0.0	0.0

	RC ENV~1	Max	0.1	0.2	6.6	0.0	0.0	0.0
		Min	-0.1	-0.1	3.9	0.0	0.0	0.0
	RC ENV~2	Max	0.1	0.0	4.9	0.0	0.0	0.0
		Min	-0.1	0.0	4.2	0.0	0.0	0.0
47		SX (RS)	0.2	0.0	0.4	0.0	0.0	0.0
		SY (RS)	0.0	0.3	0.5	0.0	0.0	0.0
	RC ENV~1	Max	0.2	0.3	13.4	0.0	0.0	0.0
		Min	-0.2	-0.3	8.0	0.0	0.0	0.0
	RC ENV~2	Max	0.1	0.0	10.0	0.0	0.0	0.0
		Min	-0.1	0.0	8.5	0.0	0.0	0.0
48		SX (RS)	0.2	0.0	0.6	0.0	0.0	0.0
		SY (RS)	0.0	0.3	0.5	0.0	0.0	0.0
	RC ENV~1	Max	0.2	0.3	13.4	0.0	0.0	0.0
		Min	-0.2	-0.3	7.9	0.0	0.0	0.0
	RC ENV~2	Max	0.1	0.0	10.0	0.0	0.0	0.0
		Min	-0.1	0.0	8.5	0.0	0.0	0.0
49		SX (RS)	0.1	0.0	0.4	0.0	0.0	0.0
		SY (RS)	0.0	0.1	0.2	0.0	0.0	0.0
	RC ENV~1	Max	0.1	0.2	6.8	0.0	0.0	0.0
		Min	-0.1	-0.1	3.9	0.0	0.0	0.0
	RC ENV~2	Max	0.1	0.0	5.0	0.0	0.0	0.0
		Min	-0.1	0.0	4.3	0.0	0.0	0.0
50		SX (RS)	0.2	0.0	0.6	0.0	0.0	0.0
		SY (RS)	0.0	0.3	0.3	0.0	0.0	0.0
	RC ENV~1	Max	0.2	0.3	13.2	0.0	0.0	0.0
		Min	-0.2	-0.3	7.8	0.0	0.0	0.0
	RC ENV~2	Max	0.1	0.0	9.8	0.0	0.0	0.0
		Min	-0.1	0.0	8.4	0.0	0.0	0.0
51		SX (RS)	0.2	0.0	0.3	0.0	0.0	0.0
		SY (RS)	0.0	0.3	0.3	0.0	0.0	0.0
	RC ENV~1	Max	0.2	0.3	12.4	0.0	0.0	0.0
		Min	-0.2	-0.3	7.5	0.0	0.0	0.0
	RC ENV~2	Max	0.1	-0.0	9.3	0.0	0.0	0.0
		Min	-0.1	-0.0	7.9	0.0	0.0	0.0
52		SX (RS)	0.2	0.0	0.2	0.0	0.0	0.0
		SY (RS)	0.0	0.3	0.3	0.0	0.0	0.0
	RC ENV~1	Max	0.2	0.3	12.5	0.0	0.0	0.0
		Min	-0.2	-0.3	7.5	0.0	0.0	0.0
	RC ENV~2	Max	0.1	-0.0	9.3	0.0	0.0	0.0
		Min	-0.1	-0.0	7.8	0.0	0.0	0.0
53		SX (RS)	0.2	0.0	0.1	0.0	0.0	0.0
		SY (RS)	0.0	0.3	0.3	0.0	0.0	0.0
	RC ENV~1	Max	0.2	0.3	12.6	0.0	0.0	0.0
		Min	-0.2	-0.3	7.4	0.0	0.0	0.0
	RC ENV~2	Max	0.1	-0.0	9.4	0.0	0.0	0.0
		Min	-0.1	-0.0	7.7	0.0	0.0	0.0
54		SX (RS)	0.2	0.0	0.1	0.0	0.0	0.0
		SY (RS)	0.0	0.3	0.4	0.0	0.0	0.0
	RC ENV~1	Max	0.2	0.3	12.8	0.0	0.0	0.0
		Min	-0.2	-0.3	7.4	0.0	0.0	0.0
	RC ENV~2	Max	0.1	-0.0	9.5	0.0	0.0	0.0
		Min	-0.1	-0.0	7.7	0.0	0.0	0.0
55		SX (RS)	0.2	0.0	0.1	0.0	0.0	0.0

	SY (RS)	0.0	0.3	0.4	0.0	0.0	0.0
	RC ENV~1 Max	0.2	0.3	13.1	0.0	0.0	0.0
	Min	-0.2	-0.3	7.3	0.0	0.0	0.0
	RC ENV~2 Max	0.1	-0.0	9.6	0.0	0.0	0.0
	Min	-0.1	-0.0	7.7	0.0	0.0	0.0
56	SX (RS)	0.2	0.0	0.1	0.0	0.0	0.0
	SY (RS)	0.0	0.3	0.4	0.0	0.0	0.0
	RC ENV~1 Max	0.2	0.3	13.4	0.0	0.0	0.0
	Min	-0.2	-0.3	7.3	0.0	0.0	0.0
	RC ENV~2 Max	0.1	-0.0	9.9	0.0	0.0	0.0
	Min	-0.1	-0.0	7.7	0.0	0.0	0.0
57	SX (RS)	0.2	0.0	0.0	0.0	0.0	0.0
	SY (RS)	0.0	0.3	0.4	0.0	0.0	0.0
	RC ENV~1 Max	0.2	0.3	13.8	0.0	0.0	0.0
	Min	-0.2	-0.3	7.4	0.0	0.0	0.0
	RC ENV~2 Max	0.1	-0.0	10.1	0.0	0.0	0.0
	Min	-0.1	-0.0	7.8	0.0	0.0	0.0
58	SX (RS)	0.2	0.0	0.3	0.0	0.0	0.0
	SY (RS)	0.0	0.3	0.5	0.0	0.0	0.0
	RC ENV~1 Max	0.2	0.3	12.7	0.0	0.0	0.0
	Min	-0.2	-0.3	7.6	0.0	0.0	0.0
	RC ENV~2 Max	0.1	-0.0	9.5	0.0	0.0	0.0
	Min	-0.1	-0.0	8.1	0.0	0.0	0.0
59	SX (RS)	0.2	0.0	0.2	0.0	0.0	0.0
	SY (RS)	0.0	0.3	0.4	0.0	0.0	0.0
	RC ENV~1 Max	0.2	0.3	12.8	0.0	0.0	0.0
	Min	-0.2	-0.3	7.6	0.0	0.0	0.0
	RC ENV~2 Max	0.1	-0.0	9.6	0.0	0.0	0.0
	Min	-0.1	-0.0	8.0	0.0	0.0	0.0
60	SX (RS)	0.2	0.0	0.2	0.0	0.0	0.0
	SY (RS)	0.0	0.3	0.5	0.0	0.0	0.0
	RC ENV~1 Max	0.2	0.3	13.0	0.0	0.0	0.0
	Min	-0.2	-0.3	7.5	0.0	0.0	0.0
	RC ENV~2 Max	0.1	-0.0	9.6	0.0	0.0	0.0
	Min	-0.1	-0.0	8.0	0.0	0.0	0.0
61	SX (RS)	0.2	0.0	0.1	0.0	0.0	0.0
	SY (RS)	0.0	0.3	0.5	0.0	0.0	0.0
	RC ENV~1 Max	0.2	0.3	13.2	0.0	0.0	0.0
	Min	-0.2	-0.3	7.5	0.0	0.0	0.0
	RC ENV~2 Max	0.1	-0.0	9.8	0.0	0.0	0.0
	Min	-0.1	-0.0	7.9	0.0	0.0	0.0
62	SX (RS)	0.2	0.0	0.1	0.0	0.0	0.0
	SY (RS)	0.0	0.3	0.5	0.0	0.0	0.0
	RC ENV~1 Max	0.2	0.3	13.5	0.0	0.0	0.0
	Min	-0.2	-0.3	7.4	0.0	0.0	0.0
	RC ENV~2 Max	0.1	-0.0	9.9	0.0	0.0	0.0
	Min	-0.1	-0.0	7.9	0.0	0.0	0.0
63	SX (RS)	0.2	0.0	0.1	0.0	0.0	0.0
	SY (RS)	0.0	0.3	0.5	0.0	0.0	0.0
	RC ENV~1 Max	0.2	0.3	13.8	0.0	0.0	0.0
	Min	-0.2	-0.3	7.4	0.0	0.0	0.0
	RC ENV~2 Max	0.1	-0.0	10.2	0.0	0.0	0.0
	Min	-0.1	-0.0	8.0	0.0	0.0	0.0

64	SX (RS)	0.2	0.0	0.0	0.0	0.0	0.0
	SY (RS)	0.0	0.3	0.6	0.0	0.0	0.0
RC ENV~1	Max	0.2	0.3	14.2	0.0	0.0	0.0
	Min	-0.2	-0.3	7.4	0.0	0.0	0.0
RC ENV~2	Max	0.1	-0.0	10.4	0.0	0.0	0.0
	Min	-0.1	-0.0	8.0	0.0	0.0	0.0
65	SX (RS)	0.2	0.0	0.0	0.0	0.0	0.0
	SY (RS)	0.0	0.3	0.6	0.0	0.0	0.0
RC ENV~1	Max	0.2	0.3	14.6	0.0	0.0	0.0
	Min	-0.2	-0.3	7.5	0.0	0.0	0.0
RC ENV~2	Max	0.1	-0.0	10.7	0.0	0.0	0.0
	Min	-0.1	-0.0	8.1	0.0	0.0	0.0
66	SX (RS)	0.1	0.0	0.2	0.0	0.0	0.0
	SY (RS)	0.0	0.1	0.3	0.0	0.0	0.0
RC ENV~1	Max	0.1	0.1	6.3	0.0	0.0	0.0
	Min	-0.1	-0.2	3.7	0.0	0.0	0.0
RC ENV~2	Max	0.1	-0.0	4.7	0.0	0.0	0.0
	Min	-0.1	-0.0	4.0	0.0	0.0	0.0
67	SX (RS)	0.1	0.0	0.1	0.0	0.0	0.0
	SY (RS)	0.0	0.1	0.3	0.0	0.0	0.0
RC ENV~1	Max	0.1	0.1	6.4	0.0	0.0	0.0
	Min	-0.1	-0.2	3.7	0.0	0.0	0.0
RC ENV~2	Max	0.1	-0.0	4.8	0.0	0.0	0.0
	Min	-0.1	-0.0	4.0	0.0	0.0	0.0
68	SX (RS)	0.1	0.0	0.1	0.0	0.0	0.0
	SY (RS)	0.0	0.1	0.3	0.0	0.0	0.0
RC ENV~1	Max	0.1	0.1	6.5	0.0	0.0	0.0
	Min	-0.1	-0.1	3.7	0.0	0.0	0.0
RC ENV~2	Max	0.1	-0.0	4.8	0.0	0.0	0.0
	Min	-0.1	-0.0	4.0	0.0	0.0	0.0
69	SX (RS)	0.1	0.0	0.1	0.0	0.0	0.0
	SY (RS)	0.0	0.1	0.3	0.0	0.0	0.0
RC ENV~1	Max	0.1	0.1	6.6	0.0	0.0	0.0
	Min	-0.1	-0.1	3.7	0.0	0.0	0.0
RC ENV~2	Max	0.1	-0.0	4.9	0.0	0.0	0.0
	Min	-0.1	-0.0	4.0	0.0	0.0	0.0
70	SX (RS)	0.1	0.0	0.0	0.0	0.0	0.0
	SY (RS)	0.0	0.1	0.3	0.0	0.0	0.0
RC ENV~1	Max	0.1	0.1	6.7	0.0	0.0	0.0
	Min	-0.1	-0.1	3.7	0.0	0.0	0.0
RC ENV~2	Max	0.1	-0.0	5.0	0.0	0.0	0.0
	Min	-0.1	-0.0	4.0	0.0	0.0	0.0
71	SX (RS)	0.1	0.0	0.0	0.0	0.0	0.0
	SY (RS)	0.0	0.1	0.3	0.0	0.0	0.0
RC ENV~1	Max	0.1	0.1	6.9	0.0	0.0	0.0
	Min	-0.1	-0.1	3.6	0.0	0.0	0.0
RC ENV~2	Max	0.1	-0.0	5.1	0.0	0.0	0.0
	Min	-0.1	-0.0	4.0	0.0	0.0	0.0
72	SX (RS)	0.1	0.0	0.0	0.0	0.0	0.0
	SY (RS)	0.0	0.1	0.3	0.0	0.0	0.0
RC ENV~1	Max	0.1	0.1	7.1	0.0	0.0	0.0
	Min	-0.1	-0.2	3.6	0.0	0.0	0.0

	RC ENV~2	Max	0.1	-0.0	5.2	0.0	0.0	0.0
		Min	-0.1	-0.0	4.0	0.0	0.0	0.0
73	SX (RS)		0.2	0.0	0.0	0.0	0.0	0.0
	SY (RS)		0.0	0.3	0.4	0.0	0.0	0.0
	RC ENV~1	Max	0.2	0.3	14.5	0.0	0.0	0.0
		Min	-0.2	-0.3	7.4	0.0	0.0	0.0
	RC ENV~2	Max	0.1	-0.0	10.6	0.0	0.0	0.0
		Min	-0.1	-0.0	7.9	0.0	0.0	0.0
74	SX (RS)		0.2	0.0	0.1	0.0	0.0	0.0
	SY (RS)		0.0	0.3	0.4	0.0	0.0	0.0
	RC ENV~1	Max	0.2	0.3	14.8	0.0	0.0	0.0
		Min	-0.2	-0.3	7.5	0.0	0.0	0.0
	RC ENV~2	Max	0.1	-0.0	10.8	0.0	0.0	0.0
		Min	-0.1	-0.0	7.9	0.0	0.0	0.0
75	SX (RS)		0.2	0.0	0.1	0.0	0.0	0.0
	SY (RS)		0.0	0.3	0.4	0.0	0.0	0.0
	RC ENV~1	Max	0.2	0.3	15.1	0.0	0.0	0.0
		Min	-0.2	-0.3	7.6	0.0	0.0	0.0
	RC ENV~2	Max	0.1	-0.0	10.9	0.0	0.0	0.0
		Min	-0.1	-0.0	8.0	0.0	0.0	0.0
76	SX (RS)		0.2	0.0	0.1	0.0	0.0	0.0
	SY (RS)		0.0	0.3	0.4	0.0	0.0	0.0
	RC ENV~1	Max	0.2	0.3	15.3	0.0	0.0	0.0
		Min	-0.2	-0.3	7.7	0.0	0.0	0.0
	RC ENV~2	Max	0.1	-0.0	11.1	0.0	0.0	0.0
		Min	-0.1	-0.0	8.1	0.0	0.0	0.0
77	SX (RS)		0.2	0.0	0.1	0.0	0.0	0.0
	SY (RS)		0.0	0.3	0.3	0.0	0.0	0.0
	RC ENV~1	Max	0.2	0.3	15.6	0.0	0.0	0.0
		Min	-0.2	-0.3	7.8	0.0	0.0	0.0
	RC ENV~2	Max	0.1	-0.0	11.3	0.0	0.0	0.0
		Min	-0.1	-0.0	8.2	0.0	0.0	0.0
78	SX (RS)		0.2	0.0	0.2	0.0	0.0	0.0
	SY (RS)		0.0	0.3	0.3	0.0	0.0	0.0
	RC ENV~1	Max	0.2	0.3	15.8	0.0	0.0	0.0
		Min	-0.2	-0.3	8.0	0.0	0.0	0.0
	RC ENV~2	Max	0.1	-0.0	11.5	0.0	0.0	0.0
		Min	-0.1	-0.0	8.3	0.0	0.0	0.0
79	SX (RS)		0.2	0.0	0.3	0.0	0.0	0.0
	SY (RS)		0.0	0.3	0.3	0.0	0.0	0.0
	RC ENV~1	Max	0.2	0.3	16.0	0.0	0.0	0.0
		Min	-0.2	-0.3	8.1	0.0	0.0	0.0
	RC ENV~2	Max	0.1	-0.0	11.6	0.0	0.0	0.0
		Min	-0.1	-0.0	8.5	0.0	0.0	0.0
80	SX (RS)		0.2	0.0	0.0	0.0	0.0	0.0
	SY (RS)		0.0	0.3	0.6	0.0	0.0	0.0
	RC ENV~1	Max	0.2	0.3	15.0	0.0	0.0	0.0
		Min	-0.2	-0.3	7.5	0.0	0.0	0.0
	RC ENV~2	Max	0.1	-0.0	10.9	0.0	0.0	0.0
		Min	-0.1	-0.0	8.1	0.0	0.0	0.0
81	SX (RS)		0.2	0.0	0.1	0.0	0.0	0.0
	SY (RS)		0.0	0.3	0.5	0.0	0.0	0.0
	RC ENV~1	Max	0.2	0.3	15.3	0.0	0.0	0.0

	Min	-0.2	-0.3	7.6	0.0	0.0	0.0
RC ENV~2	Max	0.1	-0.0	11.1	0.0	0.0	0.0
	Min	-0.1	-0.0	8.1	0.0	0.0	0.0
82	SX (RS)	0.2	0.0	0.1	0.0	0.0	0.0
	SY (RS)	0.0	0.3	0.5	0.0	0.0	0.0
RC ENV~1	Max	0.2	0.3	15.6	0.0	0.0	0.0
	Min	-0.2	-0.3	7.7	0.0	0.0	0.0
RC ENV~2	Max	0.1	-0.0	11.3	0.0	0.0	0.0
	Min	-0.1	-0.0	8.2	0.0	0.0	0.0
83	SX (RS)	0.2	0.0	0.1	0.0	0.0	0.0
	SY (RS)	0.0	0.3	0.5	0.0	0.0	0.0
RC ENV~1	Max	0.2	0.3	15.9	0.0	0.0	0.0
	Min	-0.2	-0.3	7.8	0.0	0.0	0.0
RC ENV~2	Max	0.1	-0.0	11.5	0.0	0.0	0.0
	Min	-0.1	-0.0	8.3	0.0	0.0	0.0
84	SX (RS)	0.2	0.0	0.2	0.0	0.0	0.0
	SY (RS)	0.0	0.3	0.5	0.0	0.0	0.0
RC ENV~1	Max	0.2	0.3	16.1	0.0	0.0	0.0
	Min	-0.2	-0.3	7.9	0.0	0.0	0.0
RC ENV~2	Max	0.1	-0.0	11.7	0.0	0.0	0.0
	Min	-0.1	-0.0	8.4	0.0	0.0	0.0
85	SX (RS)	0.2	0.0	0.2	0.0	0.0	0.0
	SY (RS)	0.0	0.3	0.4	0.0	0.0	0.0
RC ENV~1	Max	0.2	0.3	16.3	0.0	0.0	0.0
	Min	-0.2	-0.3	8.1	0.0	0.0	0.0
RC ENV~2	Max	0.1	-0.0	11.8	0.0	0.0	0.0
	Min	-0.1	-0.0	8.5	0.0	0.0	0.0
86	SX (RS)	0.2	0.0	0.3	0.0	0.0	0.0
	SY (RS)	0.0	0.3	0.5	0.0	0.0	0.0
RC ENV~1	Max	0.2	0.3	16.5	0.0	0.0	0.0
	Min	-0.2	-0.3	8.2	0.0	0.0	0.0
RC ENV~2	Max	0.1	-0.0	12.0	0.0	0.0	0.0
	Min	-0.1	-0.0	8.7	0.0	0.0	0.0
87	SX (RS)	0.1	0.0	0.0	0.0	0.0	0.0
	SY (RS)	0.0	0.1	0.3	0.0	0.0	0.0
RC ENV~1	Max	0.1	0.1	7.5	0.0	0.0	0.0
	Min	-0.1	-0.2	3.7	0.0	0.0	0.0
RC ENV~2	Max	0.1	-0.0	5.5	0.0	0.0	0.0
	Min	-0.1	-0.0	4.0	0.0	0.0	0.0
88	SX (RS)	0.1	0.0	0.0	0.0	0.0	0.0
	SY (RS)	0.0	0.1	0.3	0.0	0.0	0.0
RC ENV~1	Max	0.1	0.1	7.7	0.0	0.0	0.0
	Min	-0.1	-0.1	3.7	0.0	0.0	0.0
RC ENV~2	Max	0.1	-0.0	5.6	0.0	0.0	0.0
	Min	-0.1	-0.0	4.0	0.0	0.0	0.0
89	SX (RS)	0.1	0.0	0.0	0.0	0.0	0.0
	SY (RS)	0.0	0.1	0.3	0.0	0.0	0.0
RC ENV~1	Max	0.1	0.1	7.8	0.0	0.0	0.0
	Min	-0.1	-0.1	3.8	0.0	0.0	0.0
RC ENV~2	Max	0.1	-0.0	5.7	0.0	0.0	0.0
	Min	-0.1	-0.0	4.1	0.0	0.0	0.0
90	SX (RS)	0.1	0.0	0.1	0.0	0.0	0.0
	SY (RS)	0.0	0.1	0.3	0.0	0.0	0.0

	RC ENV~1	Max	0.1	0.1	8.0	0.0	0.0	0.0
		Min	-0.1	-0.1	3.8	0.0	0.0	0.0
	RC ENV~2	Max	0.1	-0.0	5.8	0.0	0.0	0.0
		Min	-0.1	-0.0	4.1	0.0	0.0	0.0
91	SX (RS)		0.1	0.0	0.1	0.0	0.0	0.0
	SY (RS)		0.0	0.1	0.3	0.0	0.0	0.0
	RC ENV~1	Max	0.1	0.1	8.1	0.0	0.0	0.0
		Min	-0.1	-0.1	3.9	0.0	0.0	0.0
	RC ENV~2	Max	0.1	-0.0	5.9	0.0	0.0	0.0
		Min	-0.1	-0.0	4.2	0.0	0.0	0.0
92	SX (RS)		0.1	0.0	0.1	0.0	0.0	0.0
	SY (RS)		0.0	0.1	0.3	0.0	0.0	0.0
	RC ENV~1	Max	0.1	0.1	8.2	0.0	0.0	0.0
		Min	-0.1	-0.2	4.0	0.0	0.0	0.0
	RC ENV~2	Max	0.1	-0.0	5.9	0.0	0.0	0.0
		Min	-0.1	-0.0	4.2	0.0	0.0	0.0
93	SX (RS)		0.1	0.0	0.2	0.0	0.0	0.0
	SY (RS)		0.0	0.2	0.3	0.0	0.0	0.0
	RC ENV~1	Max	0.1	0.1	8.3	0.0	0.0	0.0
		Min	-0.1	-0.2	4.0	0.0	0.0	0.0
	RC ENV~2	Max	0.1	-0.0	6.0	0.0	0.0	0.0
		Min	-0.1	-0.0	4.3	0.0	0.0	0.0
94	SX (RS)		0.1	0.0	0.2	0.0	0.0	0.0
	SY (RS)		0.0	0.1	0.3	0.0	0.0	0.0
	RC ENV~1	Max	0.1	0.2	6.6	0.0	0.0	0.0
		Min	-0.1	-0.1	3.9	0.0	0.0	0.0
	RC ENV~2	Max	0.1	0.0	4.9	0.0	0.0	0.0
		Min	-0.1	0.0	4.2	0.0	0.0	0.0
95	SX (RS)		0.1	0.0	0.1	0.0	0.0	0.0
	SY (RS)		0.0	0.1	0.3	0.0	0.0	0.0
	RC ENV~1	Max	0.1	0.2	6.6	0.0	0.0	0.0
		Min	-0.1	-0.1	3.8	0.0	0.0	0.0
	RC ENV~2	Max	0.1	0.0	4.9	0.0	0.0	0.0
		Min	-0.1	0.0	4.1	0.0	0.0	0.0
96	SX (RS)		0.1	0.0	0.1	0.0	0.0	0.0
	SY (RS)		0.0	0.1	0.3	0.0	0.0	0.0
	RC ENV~1	Max	0.1	0.1	6.5	0.0	0.0	0.0
		Min	-0.1	-0.1	3.8	0.0	0.0	0.0
	RC ENV~2	Max	0.1	0.0	4.8	0.0	0.0	0.0
		Min	-0.1	0.0	4.1	0.0	0.0	0.0
97	SX (RS)		0.1	0.0	0.1	0.0	0.0	0.0
	SY (RS)		0.0	0.1	0.3	0.0	0.0	0.0
	RC ENV~1	Max	0.1	0.1	6.4	0.0	0.0	0.0
		Min	-0.1	-0.1	3.7	0.0	0.0	0.0
	RC ENV~2	Max	0.1	0.0	4.8	0.0	0.0	0.0
		Min	-0.1	0.0	4.0	0.0	0.0	0.0
98	SX (RS)		0.1	0.0	0.0	0.0	0.0	0.0
	SY (RS)		0.0	0.1	0.3	0.0	0.0	0.0
	RC ENV~1	Max	0.1	0.1	6.4	0.0	0.0	0.0
		Min	-0.1	-0.1	3.7	0.0	0.0	0.0
	RC ENV~2	Max	0.1	0.0	4.8	0.0	0.0	0.0
		Min	-0.1	0.0	4.0	0.0	0.0	0.0

99	SX (RS)	0.1	0.0	0.0	0.0	0.0	0.0
	SY (RS)	0.0	0.1	0.3	0.0	0.0	0.0
RC ENV~1	Max	0.1	0.1	6.4	0.0	0.0	0.0
	Min	-0.1	-0.1	3.7	0.0	0.0	0.0
RC ENV~2	Max	0.1	0.0	4.8	0.0	0.0	0.0
	Min	-0.1	0.0	4.0	0.0	0.0	0.0
100	SX (RS)	0.1	0.0	0.0	0.0	0.0	0.0
	SY (RS)	0.0	0.1	0.3	0.0	0.0	0.0
RC ENV~1	Max	0.1	0.2	6.4	0.0	0.0	0.0
	Min	-0.1	-0.1	3.7	0.0	0.0	0.0
RC ENV~2	Max	0.1	0.0	4.8	0.0	0.0	0.0
	Min	-0.1	0.0	4.0	0.0	0.0	0.0
101	SX (RS)	0.2	0.0	0.3	0.0	0.0	0.0
	SY (RS)	0.0	0.3	0.5	0.0	0.0	0.0
RC ENV~1	Max	0.2	0.3	13.4	0.0	0.0	0.0
	Min	-0.2	-0.3	8.0	0.0	0.0	0.0
RC ENV~2	Max	0.1	0.0	10.0	0.0	0.0	0.0
	Min	-0.1	0.0	8.5	0.0	0.0	0.0
102	SX (RS)	0.2	0.0	0.2	0.0	0.0	0.0
	SY (RS)	0.0	0.3	0.4	0.0	0.0	0.0
RC ENV~1	Max	0.2	0.3	13.2	0.0	0.0	0.0
	Min	-0.2	-0.3	7.9	0.0	0.0	0.0
RC ENV~2	Max	0.1	0.0	9.9	0.0	0.0	0.0
	Min	-0.1	0.0	8.3	0.0	0.0	0.0
103	SX (RS)	0.2	0.0	0.2	0.0	0.0	0.0
	SY (RS)	0.0	0.3	0.5	0.0	0.0	0.0
RC ENV~1	Max	0.2	0.3	13.1	0.0	0.0	0.0
	Min	-0.2	-0.3	7.8	0.0	0.0	0.0
RC ENV~2	Max	0.1	0.0	9.7	0.0	0.0	0.0
	Min	-0.1	0.0	8.2	0.0	0.0	0.0
104	SX (RS)	0.2	0.0	0.1	0.0	0.0	0.0
	SY (RS)	0.0	0.3	0.5	0.0	0.0	0.0
RC ENV~1	Max	0.2	0.3	13.0	0.0	0.0	0.0
	Min	-0.2	-0.3	7.7	0.0	0.0	0.0
RC ENV~2	Max	0.1	0.0	9.6	0.0	0.0	0.0
	Min	-0.1	0.0	8.1	0.0	0.0	0.0
105	SX (RS)	0.2	0.0	0.1	0.0	0.0	0.0
	SY (RS)	0.0	0.3	0.5	0.0	0.0	0.0
RC ENV~1	Max	0.2	0.3	12.9	0.0	0.0	0.0
	Min	-0.2	-0.3	7.6	0.0	0.0	0.0
RC ENV~2	Max	0.1	0.0	9.6	0.0	0.0	0.0
	Min	-0.1	0.0	8.1	0.0	0.0	0.0
106	SX (RS)	0.2	0.0	0.1	0.0	0.0	0.0
	SY (RS)	0.0	0.3	0.5	0.0	0.0	0.0
RC ENV~1	Max	0.2	0.3	12.9	0.0	0.0	0.0
	Min	-0.2	-0.3	7.6	0.0	0.0	0.0
RC ENV~2	Max	0.1	0.0	9.6	0.0	0.0	0.0
	Min	-0.1	0.0	8.1	0.0	0.0	0.0
107	SX (RS)	0.2	0.0	0.0	0.0	0.0	0.0
	SY (RS)	0.0	0.3	0.6	0.0	0.0	0.0
RC ENV~1	Max	0.2	0.3	12.9	0.0	0.0	0.0
	Min	-0.2	-0.3	7.6	0.0	0.0	0.0
RC ENV~2	Max	0.1	0.0	9.6	0.0	0.0	0.0

	Min	-0.1	0.0	8.1	0.0	0.0	0.0
108	SX (RS)	0.2	0.0	0.0	0.0	0.0	0.0
	SY (RS)	0.0	0.3	0.6	0.0	0.0	0.0
RC ENV~1	Max	0.2	0.3	12.9	0.0	0.0	0.0
	Min	-0.2	-0.3	7.6	0.0	0.0	0.0
RC ENV~2	Max	0.1	0.0	9.6	0.0	0.0	0.0
	Min	-0.1	0.0	8.1	0.0	0.0	0.0
109	SX (RS)	0.2	0.0	0.3	0.0	0.0	0.0
	SY (RS)	0.0	0.3	0.3	0.0	0.0	0.0
RC ENV~1	Max	0.2	0.3	13.2	0.0	0.0	0.0
	Min	-0.2	-0.3	8.0	0.0	0.0	0.0
RC ENV~2	Max	0.1	0.0	9.8	0.0	0.0	0.0
	Min	-0.1	0.0	8.3	0.0	0.0	0.0
110	SX (RS)	0.2	0.0	0.2	0.0	0.0	0.0
	SY (RS)	0.0	0.3	0.3	0.0	0.0	0.0
RC ENV~1	Max	0.2	0.3	13.0	0.0	0.0	0.0
	Min	-0.2	-0.3	7.9	0.0	0.0	0.0
RC ENV~2	Max	0.1	0.0	9.7	0.0	0.0	0.0
	Min	-0.1	0.0	8.2	0.0	0.0	0.0
111	SX (RS)	0.2	0.0	0.1	0.0	0.0	0.0
	SY (RS)	0.0	0.3	0.3	0.0	0.0	0.0
RC ENV~1	Max	0.2	0.3	12.8	0.0	0.0	0.0
	Min	-0.2	-0.3	7.7	0.0	0.0	0.0
RC ENV~2	Max	0.1	0.0	9.6	0.0	0.0	0.0
	Min	-0.1	0.0	8.1	0.0	0.0	0.0
112	SX (RS)	0.2	0.0	0.1	0.0	0.0	0.0
	SY (RS)	0.0	0.3	0.4	0.0	0.0	0.0
RC ENV~1	Max	0.2	0.3	12.7	0.0	0.0	0.0
	Min	-0.2	-0.3	7.6	0.0	0.0	0.0
RC ENV~2	Max	0.1	0.0	9.5	0.0	0.0	0.0
	Min	-0.1	0.0	8.0	0.0	0.0	0.0
113	SX (RS)	0.2	0.0	0.1	0.0	0.0	0.0
	SY (RS)	0.0	0.3	0.4	0.0	0.0	0.0
RC ENV~1	Max	0.2	0.3	12.7	0.0	0.0	0.0
	Min	-0.2	-0.3	7.6	0.0	0.0	0.0
RC ENV~2	Max	0.1	0.0	9.4	0.0	0.0	0.0
	Min	-0.1	0.0	8.0	0.0	0.0	0.0
114	SX (RS)	0.2	0.0	0.1	0.0	0.0	0.0
	SY (RS)	0.0	0.3	0.4	0.0	0.0	0.0
RC ENV~1	Max	0.2	0.3	12.7	0.0	0.0	0.0
	Min	-0.2	-0.3	7.6	0.0	0.0	0.0
RC ENV~2	Max	0.1	0.0	9.4	0.0	0.0	0.0
	Min	-0.1	0.0	8.0	0.0	0.0	0.0
115	SX (RS)	0.2	0.0	0.0	0.0	0.0	0.0
	SY (RS)	0.0	0.3	0.4	0.0	0.0	0.0
RC ENV~1	Max	0.2	0.3	12.7	0.0	0.0	0.0
	Min	-0.2	-0.3	7.6	0.0	0.0	0.0
RC ENV~2	Max	0.1	0.0	9.5	0.0	0.0	0.0
	Min	-0.1	0.0	8.0	0.0	0.0	0.0
116	SX (RS)	0.1	0.0	0.0	0.0	0.0	0.0
	SY (RS)	0.0	0.1	0.3	0.0	0.0	0.0
RC ENV~1	Max	0.1	0.2	6.4	0.0	0.0	0.0
	Min	-0.1	-0.1	3.7	0.0	0.0	0.0

	RC ENV~2	Max	0.1	0.0	4.7	0.0	0.0	0.0
		Min	-0.1	0.0	4.0	0.0	0.0	0.0
117	SX (RS)		0.1	0.0	0.0	0.0	0.0	0.0
	SY (RS)		0.0	0.1	0.3	0.0	0.0	0.0
	RC ENV~1	Max	0.1	0.1	6.3	0.0	0.0	0.0
		Min	-0.1	-0.1	3.7	0.0	0.0	0.0
	RC ENV~2	Max	0.1	0.0	4.7	0.0	0.0	0.0
		Min	-0.1	0.0	4.0	0.0	0.0	0.0
118	SX (RS)		0.1	0.0	0.0	0.0	0.0	0.0
	SY (RS)		0.0	0.1	0.3	0.0	0.0	0.0
	RC ENV~1	Max	0.1	0.1	6.3	0.0	0.0	0.0
		Min	-0.1	-0.1	3.7	0.0	0.0	0.0
	RC ENV~2	Max	0.1	0.0	4.7	0.0	0.0	0.0
		Min	-0.1	0.0	4.0	0.0	0.0	0.0
119	SX (RS)		0.1	0.0	0.1	0.0	0.0	0.0
	SY (RS)		0.0	0.1	0.3	0.0	0.0	0.0
	RC ENV~1	Max	0.1	0.1	6.3	0.0	0.0	0.0
		Min	-0.1	-0.1	3.7	0.0	0.0	0.0
	RC ENV~2	Max	0.1	0.0	4.7	0.0	0.0	0.0
		Min	-0.1	0.0	4.0	0.0	0.0	0.0
120	SX (RS)		0.1	0.0	0.1	0.0	0.0	0.0
	SY (RS)		0.0	0.1	0.3	0.0	0.0	0.0
	RC ENV~1	Max	0.1	0.1	6.4	0.0	0.0	0.0
		Min	-0.1	-0.1	3.8	0.0	0.0	0.0
	RC ENV~2	Max	0.1	0.0	4.8	0.0	0.0	0.0
		Min	-0.1	0.0	4.0	0.0	0.0	0.0
121	SX (RS)		0.1	0.0	0.1	0.0	0.0	0.0
	SY (RS)		0.0	0.1	0.3	0.0	0.0	0.0
	RC ENV~1	Max	0.1	0.2	6.5	0.0	0.0	0.0
		Min	-0.1	-0.1	3.8	0.0	0.0	0.0
	RC ENV~2	Max	0.1	0.0	4.8	0.0	0.0	0.0
		Min	-0.1	0.0	4.1	0.0	0.0	0.0
122	SX (RS)		0.1	0.0	0.2	0.0	0.0	0.0
	SY (RS)		0.0	0.2	0.3	0.0	0.0	0.0
	RC ENV~1	Max	0.1	0.2	6.5	0.0	0.0	0.0
		Min	-0.1	-0.1	3.9	0.0	0.0	0.0
	RC ENV~2	Max	0.1	0.0	4.9	0.0	0.0	0.0
		Min	-0.1	0.0	4.1	0.0	0.0	0.0
123	SX (RS)		0.2	0.0	0.0	0.0	0.0	0.0
	SY (RS)		0.0	0.3	0.6	0.0	0.0	0.0
	RC ENV~1	Max	0.2	0.3	12.9	0.0	0.0	0.0
		Min	-0.2	-0.3	7.6	0.0	0.0	0.0
	RC ENV~2	Max	0.1	0.0	9.6	0.0	0.0	0.0
		Min	-0.1	0.0	8.1	0.0	0.0	0.0
124	SX (RS)		0.2	0.0	0.1	0.0	0.0	0.0
	SY (RS)		0.0	0.3	0.5	0.0	0.0	0.0
	RC ENV~1	Max	0.2	0.3	12.8	0.0	0.0	0.0
		Min	-0.2	-0.3	7.6	0.0	0.0	0.0
	RC ENV~2	Max	0.1	0.0	9.6	0.0	0.0	0.0
		Min	-0.1	0.0	8.1	0.0	0.0	0.0
125	SX (RS)		0.2	0.0	0.1	0.0	0.0	0.0
	SY (RS)		0.0	0.3	0.5	0.0	0.0	0.0

	RC ENV~1	Max	0.2	0.3	12.8	0.0	0.0	0.0
		Min	-0.2	-0.3	7.6	0.0	0.0	0.0
	RC ENV~2	Max	0.1	0.0	9.5	0.0	0.0	0.0
		Min	-0.1	0.0	8.1	0.0	0.0	0.0
126		SX (RS)	0.2	0.0	0.1	0.0	0.0	0.0
		SY (RS)	0.0	0.3	0.5	0.0	0.0	0.0
	RC ENV~1	Max	0.2	0.3	12.8	0.0	0.0	0.0
		Min	-0.2	-0.3	7.7	0.0	0.0	0.0
	RC ENV~2	Max	0.1	0.0	9.6	0.0	0.0	0.0
		Min	-0.1	0.0	8.1	0.0	0.0	0.0
127		SX (RS)	0.2	0.0	0.2	0.0	0.0	0.0
		SY (RS)	0.0	0.3	0.5	0.0	0.0	0.0
	RC ENV~1	Max	0.2	0.3	12.9	0.0	0.0	0.0
		Min	-0.2	-0.3	7.8	0.0	0.0	0.0
	RC ENV~2	Max	0.1	0.0	9.6	0.0	0.0	0.0
		Min	-0.1	0.0	8.2	0.0	0.0	0.0
128		SX (RS)	0.2	0.0	0.2	0.0	0.0	0.0
		SY (RS)	0.0	0.3	0.4	0.0	0.0	0.0
	RC ENV~1	Max	0.2	0.3	13.1	0.0	0.0	0.0
		Min	-0.2	-0.3	7.9	0.0	0.0	0.0
	RC ENV~2	Max	0.1	0.0	9.8	0.0	0.0	0.0
		Min	-0.1	0.0	8.3	0.0	0.0	0.0
129		SX (RS)	0.2	0.0	0.3	0.0	0.0	0.0
		SY (RS)	0.0	0.3	0.5	0.0	0.0	0.0
	RC ENV~1	Max	0.2	0.3	13.3	0.0	0.0	0.0
		Min	-0.2	-0.3	8.0	0.0	0.0	0.0
	RC ENV~2	Max	0.1	0.0	9.9	0.0	0.0	0.0
		Min	-0.1	0.0	8.4	0.0	0.0	0.0
130		SX (RS)	0.2	0.0	0.0	0.0	0.0	0.0
		SY (RS)	0.0	0.3	0.4	0.0	0.0	0.0
	RC ENV~1	Max	0.2	0.3	12.7	0.0	0.0	0.0
		Min	-0.2	-0.3	7.6	0.0	0.0	0.0
	RC ENV~2	Max	0.1	0.0	9.4	0.0	0.0	0.0
		Min	-0.1	0.0	8.0	0.0	0.0	0.0
131		SX (RS)	0.2	0.0	0.1	0.0	0.0	0.0
		SY (RS)	0.0	0.3	0.4	0.0	0.0	0.0
	RC ENV~1	Max	0.2	0.3	12.6	0.0	0.0	0.0
		Min	-0.2	-0.3	7.5	0.0	0.0	0.0
	RC ENV~2	Max	0.1	0.0	9.4	0.0	0.0	0.0
		Min	-0.1	0.0	8.0	0.0	0.0	0.0
132		SX (RS)	0.2	0.0	0.1	0.0	0.0	0.0
		SY (RS)	0.0	0.3	0.4	0.0	0.0	0.0
	RC ENV~1	Max	0.2	0.3	12.6	0.0	0.0	0.0
		Min	-0.2	-0.3	7.6	0.0	0.0	0.0
	RC ENV~2	Max	0.1	0.0	9.4	0.0	0.0	0.0
		Min	-0.1	0.0	8.0	0.0	0.0	0.0
133		SX (RS)	0.2	0.0	0.1	0.0	0.0	0.0
		SY (RS)	0.0	0.3	0.4	0.0	0.0	0.0
	RC ENV~1	Max	0.2	0.3	12.6	0.0	0.0	0.0
		Min	-0.2	-0.3	7.6	0.0	0.0	0.0
	RC ENV~2	Max	0.1	0.0	9.4	0.0	0.0	0.0
		Min	-0.1	0.0	8.0	0.0	0.0	0.0
134		SX (RS)	0.2	0.0	0.1	0.0	0.0	0.0

	SY (RS)	0.0	0.3	0.3	0.0	0.0	0.0
	RC ENV~1 Max	0.2	0.3	12.7	0.0	0.0	0.0
	Min	-0.2	-0.3	7.7	0.0	0.0	0.0
	RC ENV~2 Max	0.1	0.0	9.5	0.0	0.0	0.0
	Min	-0.1	0.0	8.1	0.0	0.0	0.0
135	SX (RS)	0.2	0.0	0.2	0.0	0.0	0.0
	SY (RS)	0.0	0.3	0.3	0.0	0.0	0.0
	RC ENV~1 Max	0.2	0.3	12.9	0.0	0.0	0.0
	Min	-0.2	-0.3	7.8	0.0	0.0	0.0
	RC ENV~2 Max	0.1	0.0	9.6	0.0	0.0	0.0
	Min	-0.1	0.0	8.2	0.0	0.0	0.0
136	SX (RS)	0.2	0.0	0.3	0.0	0.0	0.0
	SY (RS)	0.0	0.3	0.3	0.0	0.0	0.0
	RC ENV~1 Max	0.2	0.3	13.1	0.0	0.0	0.0
	Min	-0.2	-0.3	8.0	0.0	0.0	0.0
	RC ENV~2 Max	0.1	0.0	9.7	0.0	0.0	0.0
	Min	-0.1	0.0	8.3	0.0	0.0	0.0
137	SX (RS)	0.1	0.0	0.3	0.0	0.0	0.0
	SY (RS)	0.0	0.1	0.1	0.0	0.0	0.0
	RC ENV~1 Max	0.1	0.1	6.5	0.0	0.0	0.0
	Min	-0.1	-0.1	3.8	0.0	0.0	0.0
	RC ENV~2 Max	0.0	0.0	4.9	0.0	0.0	0.0
	Min	-0.0	-0.0	4.1	0.0	0.0	0.0
138	SX (RS)	0.2	0.0	0.5	0.0	0.0	0.0
	SY (RS)	0.0	0.3	0.3	0.0	0.0	0.0
	RC ENV~1 Max	0.2	0.3	12.9	0.0	0.0	0.0
	Min	-0.2	-0.3	7.7	0.0	0.0	0.0
	RC ENV~2 Max	0.1	0.0	9.7	0.0	0.0	0.0
	Min	-0.1	0.0	8.2	0.0	0.0	0.0
139	SX (RS)	0.2	0.0	0.4	0.0	0.0	0.0
	SY (RS)	0.0	0.3	0.2	0.0	0.0	0.0
	RC ENV~1 Max	0.2	0.3	12.9	0.0	0.0	0.0
	Min	-0.2	-0.3	7.8	0.0	0.0	0.0
	RC ENV~2 Max	0.1	0.0	9.6	0.0	0.0	0.0
	Min	-0.1	0.0	8.2	0.0	0.0	0.0
140	SX (RS)	0.1	0.0	0.3	0.0	0.0	0.0
	SY (RS)	0.0	0.1	0.1	0.0	0.0	0.0
	RC ENV~1 Max	0.1	0.1	6.5	0.0	0.0	0.0
	Min	-0.1	-0.1	3.9	0.0	0.0	0.0
	RC ENV~2 Max	0.0	0.0	4.9	0.0	0.0	0.0
	Min	-0.0	-0.0	4.2	0.0	0.0	0.0
141	SX (RS)	0.2	0.0	0.5	0.0	0.0	0.0
	SY (RS)	0.0	0.3	0.2	0.0	0.0	0.0
	RC ENV~1 Max	0.2	0.3	13.0	0.0	0.0	0.0
	Min	-0.2	-0.3	7.8	0.0	0.0	0.0
	RC ENV~2 Max	0.1	0.0	9.7	0.0	0.0	0.0
	Min	-0.1	0.0	8.3	0.0	0.0	0.0
142	SX (RS)	0.2	0.0	0.4	0.0	0.0	0.0
	SY (RS)	0.0	0.3	0.2	0.0	0.0	0.0
	RC ENV~1 Max	0.2	0.3	12.9	0.0	0.0	0.0
	Min	-0.2	-0.3	7.9	0.0	0.0	0.0
	RC ENV~2 Max	0.1	0.0	9.7	0.0	0.0	0.0
	Min	-0.1	0.0	8.2	0.0	0.0	0.0

143	SX (RS)	0.1	0.0	0.3	0.0	0.0	0.0
	SY (RS)	0.0	0.1	0.1	0.0	0.0	0.0
RC ENV~1	Max	0.1	0.1	6.5	0.0	0.0	0.0
	Min	-0.1	-0.1	3.9	0.0	0.0	0.0
RC ENV~2	Max	0.0	0.0	4.9	0.0	0.0	0.0
	Min	-0.0	-0.0	4.2	0.0	0.0	0.0
144	SX (RS)	0.2	0.0	0.4	0.0	0.0	0.0
	SY (RS)	0.0	0.3	0.1	0.0	0.0	0.0
RC ENV~1	Max	0.2	0.3	13.0	0.0	0.0	0.0
	Min	-0.2	-0.3	7.9	0.0	0.0	0.0
RC ENV~2	Max	0.1	0.0	9.7	0.0	0.0	0.0
	Min	-0.1	0.0	8.3	0.0	0.0	0.0
145	SX (RS)	0.2	0.0	0.3	0.0	0.0	0.0
	SY (RS)	0.0	0.3	0.1	0.0	0.0	0.0
RC ENV~1	Max	0.2	0.3	13.0	0.0	0.0	0.0
	Min	-0.2	-0.3	7.9	0.0	0.0	0.0
RC ENV~2	Max	0.1	0.0	9.7	0.0	0.0	0.0
	Min	-0.1	0.0	8.3	0.0	0.0	0.0
146	SX (RS)	0.1	0.0	0.3	0.0	0.0	0.0
	SY (RS)	0.0	0.1	0.1	0.0	0.0	0.0
RC ENV~1	Max	0.1	0.1	6.5	0.0	0.0	0.0
	Min	-0.1	-0.1	3.9	0.0	0.0	0.0
RC ENV~2	Max	0.0	0.0	4.9	0.0	0.0	0.0
	Min	-0.1	-0.0	4.2	0.0	0.0	0.0
147	SX (RS)	0.2	0.0	0.4	0.0	0.0	0.0
	SY (RS)	0.0	0.3	0.1	0.0	0.0	0.0
RC ENV~1	Max	0.2	0.3	13.0	0.0	0.0	0.0
	Min	-0.2	-0.3	7.9	0.0	0.0	0.0
RC ENV~2	Max	0.1	0.0	9.7	0.0	0.0	0.0
	Min	-0.1	0.0	8.3	0.0	0.0	0.0
148	SX (RS)	0.2	0.0	0.3	0.0	0.0	0.0
	SY (RS)	0.0	0.3	0.1	0.0	0.0	0.0
RC ENV~1	Max	0.2	0.3	13.0	0.0	0.0	0.0
	Min	-0.2	-0.3	8.0	0.0	0.0	0.0
RC ENV~2	Max	0.1	0.0	9.7	0.0	0.0	0.0
	Min	-0.1	0.0	8.3	0.0	0.0	0.0
149	SX (RS)	0.1	0.0	0.3	0.0	0.0	0.0
	SY (RS)	0.0	0.1	0.0	0.0	0.0	0.0
RC ENV~1	Max	0.1	0.1	6.5	0.0	0.0	0.0
	Min	-0.1	-0.1	4.0	0.0	0.0	0.0
RC ENV~2	Max	0.0	0.0	4.9	0.0	0.0	0.0
	Min	-0.1	-0.0	4.2	0.0	0.0	0.0
150	SX (RS)	0.2	0.0	0.4	0.0	0.0	0.0
	SY (RS)	0.0	0.3	0.1	0.0	0.0	0.0
RC ENV~1	Max	0.2	0.3	13.0	0.0	0.0	0.0
	Min	-0.2	-0.3	8.0	0.0	0.0	0.0
RC ENV~2	Max	0.1	0.0	9.7	0.0	0.0	0.0
	Min	-0.1	0.0	8.4	0.0	0.0	0.0
151	SX (RS)	0.2	0.0	0.3	0.0	0.0	0.0
	SY (RS)	0.0	0.3	0.1	0.0	0.0	0.0
RC ENV~1	Max	0.2	0.3	13.1	0.0	0.0	0.0
	Min	-0.2	-0.3	8.1	0.0	0.0	0.0

	RC ENV~2	Max	0.1	0.0	9.8	0.0	0.0	0.0
		Min	-0.1	0.0	8.3	0.0	0.0	0.0
152	SX (RS)		0.1	0.0	0.2	0.0	0.0	0.0
	SY (RS)		0.0	0.1	0.0	0.0	0.0	0.0
	RC ENV~1	Max	0.1	0.1	6.5	0.0	0.0	0.0
		Min	-0.1	-0.1	4.0	0.0	0.0	0.0
	RC ENV~2	Max	0.0	0.0	4.9	0.0	0.0	0.0
		Min	-0.1	-0.0	4.2	0.0	0.0	0.0
153	SX (RS)		0.2	0.0	0.4	0.0	0.0	0.0
	SY (RS)		0.0	0.3	0.1	0.0	0.0	0.0
	RC ENV~1	Max	0.2	0.3	13.0	0.0	0.0	0.0
		Min	-0.2	-0.3	8.0	0.0	0.0	0.0
	RC ENV~2	Max	0.1	0.0	9.7	0.0	0.0	0.0
		Min	-0.1	0.0	8.4	0.0	0.0	0.0
154	SX (RS)		0.2	0.0	0.3	0.0	0.0	0.0
	SY (RS)		0.0	0.3	0.1	0.0	0.0	0.0
	RC ENV~1	Max	0.2	0.3	13.1	0.0	0.0	0.0
		Min	-0.2	-0.3	8.1	0.0	0.0	0.0
	RC ENV~2	Max	0.1	0.0	9.8	0.0	0.0	0.0
		Min	-0.1	0.0	8.4	0.0	0.0	0.0
155	SX (RS)		0.2	0.0	0.4	0.0	0.0	0.0
	SY (RS)		0.0	0.3	0.0	0.0	0.0	0.0
	RC ENV~1	Max	0.2	0.3	13.0	0.0	0.0	0.0
		Min	-0.2	-0.3	8.0	0.0	0.0	0.0
	RC ENV~2	Max	0.1	0.0	9.7	0.0	0.0	0.0
		Min	-0.1	-0.0	8.4	0.0	0.0	0.0
156	SX (RS)		0.1	0.0	0.2	0.0	0.0	0.0
	SY (RS)		0.0	0.1	0.0	0.0	0.0	0.0
	RC ENV~1	Max	0.1	0.1	6.5	0.0	0.0	0.0
		Min	-0.1	-0.1	4.0	0.0	0.0	0.0
	RC ENV~2	Max	0.0	0.0	4.8	0.0	0.0	0.0
		Min	-0.1	-0.0	4.2	0.0	0.0	0.0
157	SX (RS)		0.2	0.0	0.4	0.0	0.0	0.0
	SY (RS)		0.0	0.3	0.0	0.0	0.0	0.0
	RC ENV~1	Max	0.2	0.3	13.0	0.0	0.0	0.0
		Min	-0.2	-0.3	8.0	0.0	0.0	0.0
	RC ENV~2	Max	0.1	0.0	9.7	0.0	0.0	0.0
		Min	-0.1	-0.0	8.3	0.0	0.0	0.0
158	SX (RS)		0.2	0.0	0.3	0.0	0.0	0.0
	SY (RS)		0.0	0.3	0.0	0.0	0.0	0.0
	RC ENV~1	Max	0.2	0.3	13.0	0.0	0.0	0.0
		Min	-0.2	-0.3	8.1	0.0	0.0	0.0
	RC ENV~2	Max	0.1	0.0	9.7	0.0	0.0	0.0
		Min	-0.1	0.0	8.3	0.0	0.0	0.0
159	SX (RS)		0.1	0.0	0.2	0.0	0.0	0.0
	SY (RS)		0.0	0.1	0.0	0.0	0.0	0.0
	RC ENV~1	Max	0.1	0.1	6.4	0.0	0.0	0.0
		Min	-0.1	-0.1	3.9	0.0	0.0	0.0
	RC ENV~2	Max	0.0	0.0	4.8	0.0	0.0	0.0
		Min	-0.1	-0.0	4.2	0.0	0.0	0.0
160	SX (RS)		0.2	0.0	0.3	0.0	0.0	0.0
	SY (RS)		0.0	0.3	0.0	0.0	0.0	0.0
	RC ENV~1	Max	0.2	0.3	12.9	0.0	0.0	0.0

	Min	-0.2	-0.3	7.9	0.0	0.0	0.0
RC ENV~2	Max	0.1	0.0	9.6	0.0	0.0	0.0
	Min	-0.1	-0.0	8.3	0.0	0.0	0.0
161	SX (RS)	0.2	0.0	0.2	0.0	0.0	0.0
	SY (RS)	0.0	0.3	0.0	0.0	0.0	0.0
RC ENV~1	Max	0.2	0.3	12.9	0.0	0.0	0.0
	Min	-0.2	-0.3	8.0	0.0	0.0	0.0
RC ENV~2	Max	0.1	0.0	9.7	0.0	0.0	0.0
	Min	-0.1	-0.0	8.3	0.0	0.0	0.0
162	SX (RS)	0.1	0.0	0.2	0.0	0.0	0.0
	SY (RS)	0.0	0.1	0.0	0.0	0.0	0.0
RC ENV~1	Max	0.1	0.1	6.4	0.0	0.0	0.0
	Min	-0.1	-0.1	3.9	0.0	0.0	0.0
RC ENV~2	Max	0.0	0.0	4.8	0.0	0.0	0.0
	Min	-0.1	-0.0	4.1	0.0	0.0	0.0
163	SX (RS)	0.2	0.0	0.3	0.0	0.0	0.0
	SY (RS)	0.0	0.3	0.0	0.0	0.0	0.0
RC ENV~1	Max	0.2	0.3	12.7	0.0	0.0	0.0
	Min	-0.2	-0.3	7.9	0.0	0.0	0.0
RC ENV~2	Max	0.1	0.0	9.5	0.0	0.0	0.0
	Min	-0.1	-0.0	8.2	0.0	0.0	0.0
164	SX (RS)	0.2	0.0	0.2	0.0	0.0	0.0
	SY (RS)	0.0	0.3	0.0	0.0	0.0	0.0
RC ENV~1	Max	0.2	0.3	12.8	0.0	0.0	0.0
	Min	-0.2	-0.3	8.0	0.0	0.0	0.0
RC ENV~2	Max	0.1	0.0	9.6	0.0	0.0	0.0
	Min	-0.1	-0.0	8.2	0.0	0.0	0.0
165	SX (RS)	0.1	0.0	0.2	0.0	0.0	0.0
	SY (RS)	0.0	0.1	0.0	0.0	0.0	0.0
RC ENV~1	Max	0.1	0.1	6.3	0.0	0.0	0.0
	Min	-0.1	-0.1	3.9	0.0	0.0	0.0
RC ENV~2	Max	0.0	-0.0	4.7	0.0	0.0	0.0
	Min	-0.1	-0.0	4.1	0.0	0.0	0.0
166	SX (RS)	0.2	0.0	0.3	0.0	0.0	0.0
	SY (RS)	0.0	0.3	0.0	0.0	0.0	0.0
RC ENV~1	Max	0.2	0.3	12.6	0.0	0.0	0.0
	Min	-0.2	-0.3	7.8	0.0	0.0	0.0
RC ENV~2	Max	0.1	-0.0	9.4	0.0	0.0	0.0
	Min	-0.1	-0.0	8.2	0.0	0.0	0.0
167	SX (RS)	0.2	0.0	0.2	0.0	0.0	0.0
	SY (RS)	0.0	0.3	0.0	0.0	0.0	0.0
RC ENV~1	Max	0.2	0.3	12.7	0.0	0.0	0.0
	Min	-0.2	-0.3	7.9	0.0	0.0	0.0
RC ENV~2	Max	0.1	-0.0	9.5	0.0	0.0	0.0
	Min	-0.1	-0.0	8.2	0.0	0.0	0.0
168	SX (RS)	0.1	0.0	0.2	0.0	0.0	0.0
	SY (RS)	0.0	0.1	0.0	0.0	0.0	0.0
RC ENV~1	Max	0.1	0.1	6.2	0.0	0.0	0.0
	Min	-0.1	-0.1	3.9	0.0	0.0	0.0
RC ENV~2	Max	0.0	0.0	4.7	0.0	0.0	0.0
	Min	-0.1	-0.0	4.1	0.0	0.0	0.0
169	SX (RS)	0.2	0.0	0.3	0.0	0.0	0.0
	SY (RS)	0.0	0.3	0.0	0.0	0.0	0.0

	RC ENV~1	Max	0.2	0.3	12.5	0.0	0.0	0.0
		Min	-0.2	-0.3	7.8	0.0	0.0	0.0
	RC ENV~2	Max	0.1	-0.0	9.4	0.0	0.0	0.0
		Min	-0.1	-0.0	8.1	0.0	0.0	0.0
170	SX (RS)		0.2	0.0	0.2	0.0	0.0	0.0
	SY (RS)		0.0	0.3	0.0	0.0	0.0	0.0
	RC ENV~1	Max	0.2	0.3	12.6	0.0	0.0	0.0
		Min	-0.2	-0.3	7.9	0.0	0.0	0.0
	RC ENV~2	Max	0.1	-0.0	9.4	0.0	0.0	0.0
		Min	-0.1	-0.0	8.1	0.0	0.0	0.0
171	SX (RS)		0.1	0.0	0.2	0.0	0.0	0.0
	SY (RS)		0.0	0.1	0.0	0.0	0.0	0.0
	RC ENV~1	Max	0.1	0.1	6.2	0.0	0.0	0.0
		Min	-0.1	-0.1	3.8	0.0	0.0	0.0
	RC ENV~2	Max	0.0	0.0	4.6	0.0	0.0	0.0
		Min	-0.1	-0.0	4.0	0.0	0.0	0.0
172	SX (RS)		0.2	0.0	0.4	0.0	0.0	0.0
	SY (RS)		0.0	0.3	0.0	0.0	0.0	0.0
	RC ENV~1	Max	0.2	0.3	12.4	0.0	0.0	0.0
		Min	-0.2	-0.3	7.7	0.0	0.0	0.0
	RC ENV~2	Max	0.1	-0.0	9.3	0.0	0.0	0.0
		Min	-0.1	-0.0	8.0	0.0	0.0	0.0
173	SX (RS)		0.2	0.0	0.3	0.0	0.0	0.0
	SY (RS)		0.0	0.3	0.0	0.0	0.0	0.0
	RC ENV~1	Max	0.2	0.3	12.5	0.0	0.0	0.0
		Min	-0.2	-0.3	7.8	0.0	0.0	0.0
	RC ENV~2	Max	0.1	-0.0	9.4	0.0	0.0	0.0
		Min	-0.1	-0.0	8.0	0.0	0.0	0.0
174	SX (RS)		0.2	0.0	0.4	0.0	0.0	0.0
	SY (RS)		0.0	0.3	0.0	0.0	0.0	0.0
	RC ENV~1	Max	0.2	0.3	12.3	0.0	0.0	0.0
		Min	-0.2	-0.3	7.6	0.0	0.0	0.0
	RC ENV~2	Max	0.1	-0.0	9.2	0.0	0.0	0.0
		Min	-0.1	-0.0	8.0	0.0	0.0	0.0
175	SX (RS)		0.1	0.0	0.2	0.0	0.0	0.0
	SY (RS)		0.0	0.1	0.0	0.0	0.0	0.0
	RC ENV~1	Max	0.1	0.1	6.0	0.0	0.0	0.0
		Min	-0.1	-0.1	3.7	0.0	0.0	0.0
	RC ENV~2	Max	0.0	0.0	4.5	0.0	0.0	0.0
		Min	-0.1	-0.0	4.0	0.0	0.0	0.0
176	SX (RS)		0.2	0.0	0.4	0.0	0.0	0.0
	SY (RS)		0.0	0.3	0.1	0.0	0.0	0.0
	RC ENV~1	Max	0.2	0.3	12.1	0.0	0.0	0.0
		Min	-0.2	-0.3	7.5	0.0	0.0	0.0
	RC ENV~2	Max	0.1	-0.0	9.1	0.0	0.0	0.0
		Min	-0.1	-0.0	7.9	0.0	0.0	0.0
177	SX (RS)		0.2	0.0	0.3	0.0	0.0	0.0
	SY (RS)		0.0	0.3	0.1	0.0	0.0	0.0
	RC ENV~1	Max	0.2	0.3	12.3	0.0	0.0	0.0
		Min	-0.2	-0.3	7.6	0.0	0.0	0.0
	RC ENV~2	Max	0.1	-0.0	9.2	0.0	0.0	0.0
		Min	-0.1	-0.0	7.9	0.0	0.0	0.0

178	SX (RS)	0.1	0.0	0.3	0.0	0.0	0.0
	SY (RS)	0.0	0.1	0.0	0.0	0.0	0.0
RC ENV~1	Max	0.1	0.1	6.0	0.0	0.0	0.0
	Min	-0.1	-0.1	3.7	0.0	0.0	0.0
RC ENV~2	Max	0.0	0.0	4.5	0.0	0.0	0.0
	Min	-0.1	-0.0	3.9	0.0	0.0	0.0
179	SX (RS)	0.2	0.0	0.4	0.0	0.0	0.0
	SY (RS)	0.0	0.3	0.1	0.0	0.0	0.0
RC ENV~1	Max	0.2	0.3	12.0	0.0	0.0	0.0
	Min	-0.2	-0.3	7.4	0.0	0.0	0.0
RC ENV~2	Max	0.1	-0.0	9.0	0.0	0.0	0.0
	Min	-0.1	-0.0	7.8	0.0	0.0	0.0
180	SX (RS)	0.2	0.0	0.3	0.0	0.0	0.0
	SY (RS)	0.0	0.3	0.1	0.0	0.0	0.0
RC ENV~1	Max	0.2	0.3	12.1	0.0	0.0	0.0
	Min	-0.2	-0.3	7.5	0.0	0.0	0.0
RC ENV~2	Max	0.1	-0.0	9.1	0.0	0.0	0.0
	Min	-0.1	-0.0	7.8	0.0	0.0	0.0
181	SX (RS)	0.1	0.0	0.3	0.0	0.0	0.0
	SY (RS)	0.0	0.1	0.1	0.0	0.0	0.0
RC ENV~1	Max	0.1	0.1	5.9	0.0	0.0	0.0
	Min	-0.1	-0.1	3.7	0.0	0.0	0.0
RC ENV~2	Max	0.0	0.0	4.4	0.0	0.0	0.0
	Min	-0.1	-0.0	3.9	0.0	0.0	0.0
182	SX (RS)	0.2	0.0	0.4	0.0	0.0	0.0
	SY (RS)	0.0	0.3	0.1	0.0	0.0	0.0
RC ENV~1	Max	0.2	0.3	11.9	0.0	0.0	0.0
	Min	-0.2	-0.3	7.4	0.0	0.0	0.0
RC ENV~2	Max	0.1	-0.0	8.9	0.0	0.0	0.0
	Min	-0.1	-0.0	7.8	0.0	0.0	0.0
183	SX (RS)	0.2	0.0	0.3	0.0	0.0	0.0
	SY (RS)	0.0	0.3	0.1	0.0	0.0	0.0
RC ENV~1	Max	0.2	0.3	12.0	0.0	0.0	0.0
	Min	-0.2	-0.3	7.5	0.0	0.0	0.0
RC ENV~2	Max	0.1	-0.0	9.0	0.0	0.0	0.0
	Min	-0.1	-0.0	7.8	0.0	0.0	0.0
184	SX (RS)	0.1	0.0	0.3	0.0	0.0	0.0
	SY (RS)	0.0	0.1	0.1	0.0	0.0	0.0
RC ENV~1	Max	0.1	0.1	5.9	0.0	0.0	0.0
	Min	-0.1	-0.1	3.6	0.0	0.0	0.0
RC ENV~2	Max	0.0	0.0	4.4	0.0	0.0	0.0
	Min	-0.0	-0.0	3.9	0.0	0.0	0.0
185	SX (RS)	0.2	0.0	0.4	0.0	0.0	0.0
	SY (RS)	0.0	0.3	0.1	0.0	0.0	0.0
RC ENV~1	Max	0.2	0.3	11.8	0.0	0.0	0.0
	Min	-0.2	-0.3	7.3	0.0	0.0	0.0
RC ENV~2	Max	0.1	-0.0	8.9	0.0	0.0	0.0
	Min	-0.1	-0.0	7.7	0.0	0.0	0.0
186	SX (RS)	0.2	0.0	0.3	0.0	0.0	0.0
	SY (RS)	0.0	0.3	0.1	0.0	0.0	0.0
RC ENV~1	Max	0.2	0.3	12.0	0.0	0.0	0.0
	Min	-0.2	-0.3	7.4	0.0	0.0	0.0
RC ENV~2	Max	0.1	-0.0	8.9	0.0	0.0	0.0

	Min	-0.1	-0.0	7.7	0.0	0.0	0.0
187	SX (RS)	0.1	0.0	0.3	0.0	0.0	0.0
	SY (RS)	0.0	0.1	0.1	0.0	0.0	0.0
RC ENV~1	Max	0.1	0.1	5.9	0.0	0.0	0.0
	Min	-0.1	-0.1	3.6	0.0	0.0	0.0
RC ENV~2	Max	0.0	0.0	4.4	0.0	0.0	0.0
	Min	-0.0	-0.0	3.9	0.0	0.0	0.0
188	SX (RS)	0.2	0.0	0.5	0.0	0.0	0.0
	SY (RS)	0.0	0.3	0.2	0.0	0.0	0.0
RC ENV~1	Max	0.2	0.3	11.8	0.0	0.0	0.0
	Min	-0.2	-0.3	7.2	0.0	0.0	0.0
RC ENV~2	Max	0.1	-0.0	8.8	0.0	0.0	0.0
	Min	-0.1	-0.0	7.7	0.0	0.0	0.0
189	SX (RS)	0.2	0.0	0.4	0.0	0.0	0.0
	SY (RS)	0.0	0.3	0.2	0.0	0.0	0.0
RC ENV~1	Max	0.2	0.3	11.9	0.0	0.0	0.0
	Min	-0.2	-0.3	7.3	0.0	0.0	0.0
RC ENV~2	Max	0.1	-0.0	8.9	0.0	0.0	0.0
	Min	-0.1	-0.0	7.7	0.0	0.0	0.0
190	SX (RS)	0.1	0.0	0.3	0.0	0.0	0.0
	SY (RS)	0.0	0.1	0.1	0.0	0.0	0.0
RC ENV~1	Max	0.1	0.1	5.9	0.0	0.0	0.0
	Min	-0.1	-0.1	3.5	0.0	0.0	0.0
RC ENV~2	Max	0.0	0.0	4.4	0.0	0.0	0.0
	Min	-0.0	-0.0	3.9	0.0	0.0	0.0
191	SX (RS)	0.2	0.0	0.5	0.0	0.0	0.0
	SY (RS)	0.0	0.3	0.3	0.0	0.0	0.0
RC ENV~1	Max	0.2	0.3	11.8	0.0	0.0	0.0
	Min	-0.2	-0.3	7.2	0.0	0.0	0.0
RC ENV~2	Max	0.1	-0.0	8.8	0.0	0.0	0.0
	Min	-0.1	-0.0	7.7	0.0	0.0	0.0
192	SX (RS)	0.2	0.0	0.4	0.0	0.0	0.0
	SY (RS)	0.0	0.3	0.2	0.0	0.0	0.0
RC ENV~1	Max	0.2	0.3	11.9	0.0	0.0	0.0
	Min	-0.2	-0.3	7.3	0.0	0.0	0.0
RC ENV~2	Max	0.1	-0.0	8.9	0.0	0.0	0.0
	Min	-0.1	-0.0	7.7	0.0	0.0	0.0
193	SX (RS)	0.2	0.0	0.4	0.0	0.0	0.0
	SY (RS)	0.0	0.3	0.2	0.0	0.0	0.0
RC ENV~1	Max	0.2	0.3	12.9	0.0	0.0	0.0
	Min	-0.2	-0.3	7.8	0.0	0.0	0.0
RC ENV~2	Max	0.1	0.0	9.6	0.0	0.0	0.0
	Min	-0.1	0.0	8.2	0.0	0.0	0.0
194	SX (RS)	0.2	0.0	0.5	0.0	0.0	0.0
	SY (RS)	0.0	0.3	0.3	0.0	0.0	0.0
RC ENV~1	Max	0.2	0.3	12.9	0.0	0.0	0.0
	Min	-0.2	-0.3	7.7	0.0	0.0	0.0
RC ENV~2	Max	0.1	0.0	9.6	0.0	0.0	0.0
	Min	-0.1	0.0	8.2	0.0	0.0	0.0
195	SX (RS)	0.1	0.0	0.3	0.0	0.0	0.0
	SY (RS)	0.0	0.1	0.1	0.0	0.0	0.0
RC ENV~1	Max	0.1	0.1	6.5	0.0	0.0	0.0
	Min	-0.1	-0.1	3.8	0.0	0.0	0.0

	RC ENV~2	Max	0.0	0.0	4.8	0.0	0.0	0.0
		Min	-0.0	-0.0	4.1	0.0	0.0	0.0
196	SX (RS)		0.2	0.0	0.4	0.0	0.0	0.0
	SY (RS)		0.0	0.3	0.2	0.0	0.0	0.0
	RC ENV~1	Max	0.2	0.3	12.9	0.0	0.0	0.0
		Min	-0.2	-0.3	7.9	0.0	0.0	0.0
	RC ENV~2	Max	0.1	0.0	9.7	0.0	0.0	0.0
		Min	-0.1	0.0	8.2	0.0	0.0	0.0
197	SX (RS)		0.2	0.0	0.5	0.0	0.0	0.0
	SY (RS)		0.0	0.3	0.2	0.0	0.0	0.0
	RC ENV~1	Max	0.2	0.3	13.0	0.0	0.0	0.0
		Min	-0.2	-0.3	7.8	0.0	0.0	0.0
	RC ENV~2	Max	0.1	0.0	9.7	0.0	0.0	0.0
		Min	-0.1	0.0	8.3	0.0	0.0	0.0
198	SX (RS)		0.1	0.0	0.3	0.0	0.0	0.0
	SY (RS)		0.0	0.1	0.1	0.0	0.0	0.0
	RC ENV~1	Max	0.1	0.1	6.5	0.0	0.0	0.0
		Min	-0.1	-0.1	3.9	0.0	0.0	0.0
	RC ENV~2	Max	0.0	0.0	4.9	0.0	0.0	0.0
		Min	-0.0	-0.0	4.1	0.0	0.0	0.0
199	SX (RS)		0.2	0.0	0.3	0.0	0.0	0.0
	SY (RS)		0.0	0.3	0.1	0.0	0.0	0.0
	RC ENV~1	Max	0.2	0.3	13.0	0.0	0.0	0.0
		Min	-0.2	-0.3	8.0	0.0	0.0	0.0
	RC ENV~2	Max	0.1	0.0	9.7	0.0	0.0	0.0
		Min	-0.1	0.0	8.3	0.0	0.0	0.0
200	SX (RS)		0.2	0.0	0.4	0.0	0.0	0.0
	SY (RS)		0.0	0.3	0.1	0.0	0.0	0.0
	RC ENV~1	Max	0.2	0.3	13.0	0.0	0.0	0.0
		Min	-0.2	-0.3	7.9	0.0	0.0	0.0
	RC ENV~2	Max	0.1	0.0	9.7	0.0	0.0	0.0
		Min	-0.1	0.0	8.3	0.0	0.0	0.0
201	SX (RS)		0.1	0.0	0.3	0.0	0.0	0.0
	SY (RS)		0.0	0.1	0.1	0.0	0.0	0.0
	RC ENV~1	Max	0.1	0.1	6.6	0.0	0.0	0.0
		Min	-0.1	-0.1	3.9	0.0	0.0	0.0
	RC ENV~2	Max	0.0	0.0	4.9	0.0	0.0	0.0
		Min	-0.0	-0.0	4.2	0.0	0.0	0.0
202	SX (RS)		0.2	0.0	0.3	0.0	0.0	0.0
	SY (RS)		0.0	0.3	0.1	0.0	0.0	0.0
	RC ENV~1	Max	0.2	0.3	13.1	0.0	0.0	0.0
		Min	-0.2	-0.3	8.0	0.0	0.0	0.0
	RC ENV~2	Max	0.1	0.0	9.8	0.0	0.0	0.0
		Min	-0.1	0.0	8.3	0.0	0.0	0.0
203	SX (RS)		0.2	0.0	0.4	0.0	0.0	0.0
	SY (RS)		0.0	0.3	0.1	0.0	0.0	0.0
	RC ENV~1	Max	0.2	0.3	13.1	0.0	0.0	0.0
		Min	-0.2	-0.3	8.0	0.0	0.0	0.0
	RC ENV~2	Max	0.1	0.0	9.8	0.0	0.0	0.0
		Min	-0.1	0.0	8.4	0.0	0.0	0.0
204	SX (RS)		0.1	0.0	0.3	0.0	0.0	0.0
	SY (RS)		0.0	0.1	0.1	0.0	0.0	0.0

	RC ENV~1	Max	0.1	0.1	6.6	0.0	0.0	0.0
		Min	-0.1	-0.1	4.0	0.0	0.0	0.0
	RC ENV~2	Max	0.0	0.0	4.9	0.0	0.0	0.0
		Min	-0.0	-0.0	4.2	0.0	0.0	0.0
205		SX (RS)	0.2	0.0	0.3	0.0	0.0	0.0
		SY (RS)	0.0	0.3	0.1	0.0	0.0	0.0
	RC ENV~1	Max	0.2	0.3	13.2	0.0	0.0	0.0
		Min	-0.2	-0.3	8.1	0.0	0.0	0.0
	RC ENV~2	Max	0.1	0.0	9.9	0.0	0.0	0.0
		Min	-0.1	0.0	8.4	0.0	0.0	0.0
206		SX (RS)	0.2	0.0	0.4	0.0	0.0	0.0
		SY (RS)	0.0	0.3	0.1	0.0	0.0	0.0
	RC ENV~1	Max	0.2	0.3	13.2	0.0	0.0	0.0
		Min	-0.2	-0.3	8.0	0.0	0.0	0.0
	RC ENV~2	Max	0.1	0.0	9.9	0.0	0.0	0.0
		Min	-0.1	-0.0	8.4	0.0	0.0	0.0
207		SX (RS)	0.1	0.0	0.3	0.0	0.0	0.0
		SY (RS)	0.0	0.1	0.0	0.0	0.0	0.0
	RC ENV~1	Max	0.1	0.1	6.6	0.0	0.0	0.0
		Min	-0.1	-0.1	4.0	0.0	0.0	0.0
	RC ENV~2	Max	0.1	0.0	5.0	0.0	0.0	0.0
		Min	-0.0	-0.0	4.2	0.0	0.0	0.0
208		SX (RS)	0.2	0.0	0.3	0.0	0.0	0.0
		SY (RS)	0.0	0.3	0.1	0.0	0.0	0.0
	RC ENV~1	Max	0.2	0.3	13.4	0.0	0.0	0.0
		Min	-0.2	-0.3	8.2	0.0	0.0	0.0
	RC ENV~2	Max	0.1	0.0	10.0	0.0	0.0	0.0
		Min	-0.1	0.0	8.5	0.0	0.0	0.0
209		SX (RS)	0.2	0.0	0.4	0.0	0.0	0.0
		SY (RS)	0.0	0.3	0.1	0.0	0.0	0.0
	RC ENV~1	Max	0.2	0.3	13.3	0.0	0.0	0.0
		Min	-0.2	-0.3	8.1	0.0	0.0	0.0
	RC ENV~2	Max	0.1	0.0	9.9	0.0	0.0	0.0
		Min	-0.1	-0.0	8.5	0.0	0.0	0.0
210		SX (RS)	0.1	0.0	0.2	0.0	0.0	0.0
		SY (RS)	0.0	0.1	0.0	0.0	0.0	0.0
	RC ENV~1	Max	0.1	0.1	6.7	0.0	0.0	0.0
		Min	-0.1	-0.1	4.0	0.0	0.0	0.0
	RC ENV~2	Max	0.1	0.0	5.0	0.0	0.0	0.0
		Min	-0.0	-0.0	4.3	0.0	0.0	0.0
211		SX (RS)	0.2	0.0	0.4	0.0	0.0	0.0
		SY (RS)	0.0	0.3	0.0	0.0	0.0	0.0
	RC ENV~1	Max	0.2	0.3	13.4	0.0	0.0	0.0
		Min	-0.2	-0.3	8.1	0.0	0.0	0.0
	RC ENV~2	Max	0.1	0.0	10.0	0.0	0.0	0.0
		Min	-0.1	-0.0	8.5	0.0	0.0	0.0
212		SX (RS)	0.2	0.0	0.3	0.0	0.0	0.0
		SY (RS)	0.0	0.3	0.0	0.0	0.0	0.0
	RC ENV~1	Max	0.2	0.3	13.6	0.0	0.0	0.0
		Min	-0.2	-0.3	8.3	0.0	0.0	0.0
	RC ENV~2	Max	0.1	0.0	10.1	0.0	0.0	0.0
		Min	-0.1	0.0	8.5	0.0	0.0	0.0
213		SX (RS)	0.2	0.0	0.4	0.0	0.0	0.0

	SY (RS)	0.0	0.3	0.0	0.0	0.0	0.0
RC ENV~1	Max	0.2	0.3	13.5	0.0	0.0	0.0
	Min	-0.2	-0.3	8.2	0.0	0.0	0.0
RC ENV~2	Max	0.1	0.0	10.1	0.0	0.0	0.0
	Min	-0.1	-0.0	8.5	0.0	0.0	0.0
214	SX (RS)	0.1	0.0	0.2	0.0	0.0	0.0
	SY (RS)	0.0	0.1	0.0	0.0	0.0	0.0
RC ENV~1	Max	0.1	0.1	6.8	0.0	0.0	0.0
	Min	-0.1	-0.1	4.0	0.0	0.0	0.0
RC ENV~2	Max	0.1	0.0	5.0	0.0	0.0	0.0
	Min	-0.0	-0.0	4.3	0.0	0.0	0.0
215	SX (RS)	0.2	0.0	0.2	0.0	0.0	0.0
	SY (RS)	0.0	0.3	0.0	0.0	0.0	0.0
RC ENV~1	Max	0.2	0.3	13.7	0.0	0.0	0.0
	Min	-0.2	-0.3	8.3	0.0	0.0	0.0
RC ENV~2	Max	0.1	0.0	10.2	0.0	0.0	0.0
	Min	-0.1	0.0	8.5	0.0	0.0	0.0
216	SX (RS)	0.2	0.0	0.3	0.0	0.0	0.0
	SY (RS)	0.0	0.3	0.0	0.0	0.0	0.0
RC ENV~1	Max	0.2	0.3	13.6	0.0	0.0	0.0
	Min	-0.2	-0.3	8.2	0.0	0.0	0.0
RC ENV~2	Max	0.1	0.0	10.1	0.0	0.0	0.0
	Min	-0.1	0.0	8.5	0.0	0.0	0.0
217	SX (RS)	0.1	0.0	0.2	0.0	0.0	0.0
	SY (RS)	0.0	0.1	0.0	0.0	0.0	0.0
RC ENV~1	Max	0.1	0.1	6.8	0.0	0.0	0.0
	Min	-0.1	-0.1	4.1	0.0	0.0	0.0
RC ENV~2	Max	0.1	0.0	5.1	0.0	0.0	0.0
	Min	-0.0	-0.0	4.3	0.0	0.0	0.0
218	SX (RS)	0.2	0.0	0.2	0.0	0.0	0.0
	SY (RS)	0.0	0.3	0.0	0.0	0.0	0.0
RC ENV~1	Max	0.2	0.3	13.8	0.0	0.0	0.0
	Min	-0.2	-0.3	8.3	0.0	0.0	0.0
RC ENV~2	Max	0.1	0.0	10.2	0.0	0.0	0.0
	Min	-0.1	0.0	8.5	0.0	0.0	0.0
219	SX (RS)	0.2	0.0	0.3	0.0	0.0	0.0
	SY (RS)	0.0	0.3	0.0	0.0	0.0	0.0
RC ENV~1	Max	0.2	0.3	13.7	0.0	0.0	0.0
	Min	-0.2	-0.3	8.2	0.0	0.0	0.0
RC ENV~2	Max	0.1	0.0	10.2	0.0	0.0	0.0
	Min	-0.1	0.0	8.5	0.0	0.0	0.0
220	SX (RS)	0.1	0.0	0.2	0.0	0.0	0.0
	SY (RS)	0.0	0.1	0.0	0.0	0.0	0.0
RC ENV~1	Max	0.1	0.1	6.9	0.0	0.0	0.0
	Min	-0.1	-0.1	4.1	0.0	0.0	0.0
RC ENV~2	Max	0.1	0.0	5.1	0.0	0.0	0.0
	Min	-0.0	0.0	4.3	0.0	0.0	0.0
221	SX (RS)	0.2	0.0	0.2	0.0	0.0	0.0
	SY (RS)	0.0	0.3	0.0	0.0	0.0	0.0
RC ENV~1	Max	0.2	0.3	13.9	0.0	0.0	0.0
	Min	-0.2	-0.3	8.3	0.0	0.0	0.0
RC ENV~2	Max	0.1	0.0	10.3	0.0	0.0	0.0
	Min	-0.1	-0.0	8.5	0.0	0.0	0.0

222	SX (RS)	0.2	0.0	0.3	0.0	0.0	0.0
	SY (RS)	0.0	0.3	0.0	0.0	0.0	0.0
RC ENV~1	Max	0.2	0.3	13.9	0.0	0.0	0.0
	Min	-0.2	-0.3	8.2	0.0	0.0	0.0
RC ENV~2	Max	0.1	0.0	10.3	0.0	0.0	0.0
	Min	-0.1	-0.0	8.5	0.0	0.0	0.0
223	SX (RS)	0.1	0.0	0.2	0.0	0.0	0.0
	SY (RS)	0.0	0.1	0.0	0.0	0.0	0.0
RC ENV~1	Max	0.1	0.1	6.9	0.0	0.0	0.0
	Min	-0.1	-0.1	4.1	0.0	0.0	0.0
RC ENV~2	Max	0.1	0.0	5.2	0.0	0.0	0.0
	Min	-0.0	-0.0	4.3	0.0	0.0	0.0
224	SX (RS)	0.2	0.0	0.2	0.0	0.0	0.0
	SY (RS)	0.0	0.3	0.0	0.0	0.0	0.0
RC ENV~1	Max	0.2	0.3	14.1	0.0	0.0	0.0
	Min	-0.2	-0.3	8.3	0.0	0.0	0.0
RC ENV~2	Max	0.1	0.0	10.5	0.0	0.0	0.0
	Min	-0.1	-0.0	8.5	0.0	0.0	0.0
225	SX (RS)	0.2	0.0	0.3	0.0	0.0	0.0
	SY (RS)	0.0	0.3	0.0	0.0	0.0	0.0
RC ENV~1	Max	0.2	0.3	14.1	0.0	0.0	0.0
	Min	-0.2	-0.3	8.2	0.0	0.0	0.0
RC ENV~2	Max	0.1	0.0	10.4	0.0	0.0	0.0
	Min	-0.1	-0.0	8.5	0.0	0.0	0.0
226	SX (RS)	0.1	0.0	0.2	0.0	0.0	0.0
	SY (RS)	0.0	0.1	0.0	0.0	0.0	0.0
RC ENV~1	Max	0.1	0.1	7.0	0.0	0.0	0.0
	Min	-0.1	-0.1	4.1	0.0	0.0	0.0
RC ENV~2	Max	0.1	0.0	5.2	0.0	0.0	0.0
	Min	-0.0	-0.0	4.3	0.0	0.0	0.0
227	SX (RS)	0.2	0.0	0.3	0.0	0.0	0.0
	SY (RS)	0.0	0.3	0.0	0.0	0.0	0.0
RC ENV~1	Max	0.2	0.3	14.3	0.0	0.0	0.0
	Min	-0.2	-0.3	8.3	0.0	0.0	0.0
RC ENV~2	Max	0.1	0.0	10.6	0.0	0.0	0.0
	Min	-0.1	-0.0	8.5	0.0	0.0	0.0
228	SX (RS)	0.2	0.0	0.4	0.0	0.0	0.0
	SY (RS)	0.0	0.3	0.0	0.0	0.0	0.0
RC ENV~1	Max	0.2	0.3	14.3	0.0	0.0	0.0
	Min	-0.2	-0.3	8.2	0.0	0.0	0.0
RC ENV~2	Max	0.1	0.0	10.5	0.0	0.0	0.0
	Min	-0.1	-0.0	8.5	0.0	0.0	0.0
229	SX (RS)	0.1	0.0	0.2	0.0	0.0	0.0
	SY (RS)	0.0	0.1	0.0	0.0	0.0	0.0
RC ENV~1	Max	0.1	0.1	7.1	0.0	0.0	0.0
	Min	-0.1	-0.1	4.1	0.0	0.0	0.0
RC ENV~2	Max	0.1	0.0	5.3	0.0	0.0	0.0
	Min	-0.0	-0.0	4.3	0.0	0.0	0.0
230	SX (RS)	0.2	0.0	0.4	0.0	0.0	0.0
	SY (RS)	0.0	0.3	0.0	0.0	0.0	0.0
RC ENV~1	Max	0.2	0.3	14.4	0.0	0.0	0.0
	Min	-0.2	-0.3	8.2	0.0	0.0	0.0

	RC ENV~2	Max	0.1	0.0	10.7	0.0	0.0	0.0
		Min	-0.1	-0.0	8.5	0.0	0.0	0.0
231	SX (RS)		0.2	0.0	0.3	0.0	0.0	0.0
	SY (RS)		0.0	0.3	0.1	0.0	0.0	0.0
	RC ENV~1	Max	0.2	0.3	14.7	0.0	0.0	0.0
		Min	-0.2	-0.3	8.2	0.0	0.0	0.0
	RC ENV~2	Max	0.1	-0.0	10.8	0.0	0.0	0.0
		Min	-0.1	-0.0	8.5	0.0	0.0	0.0
232	SX (RS)		0.2	0.0	0.4	0.0	0.0	0.0
	SY (RS)		0.0	0.3	0.1	0.0	0.0	0.0
	RC ENV~1	Max	0.2	0.3	14.6	0.0	0.0	0.0
		Min	-0.2	-0.3	8.1	0.0	0.0	0.0
	RC ENV~2	Max	0.1	0.0	10.8	0.0	0.0	0.0
		Min	-0.1	-0.0	8.5	0.0	0.0	0.0
233	SX (RS)		0.1	0.0	0.2	0.0	0.0	0.0
	SY (RS)		0.0	0.1	0.0	0.0	0.0	0.0
	RC ENV~1	Max	0.1	0.1	7.3	0.0	0.0	0.0
		Min	-0.1	-0.1	4.0	0.0	0.0	0.0
	RC ENV~2	Max	0.1	0.0	5.4	0.0	0.0	0.0
		Min	-0.0	-0.0	4.3	0.0	0.0	0.0
234	SX (RS)		0.2	0.0	0.3	0.0	0.0	0.0
	SY (RS)		0.0	0.3	0.1	0.0	0.0	0.0
	RC ENV~1	Max	0.2	0.3	14.8	0.0	0.0	0.0
		Min	-0.2	-0.3	8.2	0.0	0.0	0.0
	RC ENV~2	Max	0.1	-0.0	10.9	0.0	0.0	0.0
		Min	-0.1	-0.0	8.5	0.0	0.0	0.0
235	SX (RS)		0.2	0.0	0.4	0.0	0.0	0.0
	SY (RS)		0.0	0.3	0.1	0.0	0.0	0.0
	RC ENV~1	Max	0.2	0.3	14.7	0.0	0.0	0.0
		Min	-0.2	-0.3	8.1	0.0	0.0	0.0
	RC ENV~2	Max	0.1	0.0	10.8	0.0	0.0	0.0
		Min	-0.1	-0.0	8.5	0.0	0.0	0.0
236	SX (RS)		0.1	0.0	0.3	0.0	0.0	0.0
	SY (RS)		0.0	0.1	0.0	0.0	0.0	0.0
	RC ENV~1	Max	0.1	0.1	7.4	0.0	0.0	0.0
		Min	-0.1	-0.1	4.0	0.0	0.0	0.0
	RC ENV~2	Max	0.1	0.0	5.4	0.0	0.0	0.0
		Min	-0.0	-0.0	4.3	0.0	0.0	0.0
237	SX (RS)		0.2	0.0	0.3	0.0	0.0	0.0
	SY (RS)		0.0	0.3	0.1	0.0	0.0	0.0
	RC ENV~1	Max	0.2	0.3	15.0	0.0	0.0	0.0
		Min	-0.2	-0.3	8.1	0.0	0.0	0.0
	RC ENV~2	Max	0.1	-0.0	11.0	0.0	0.0	0.0
		Min	-0.1	-0.0	8.4	0.0	0.0	0.0
238	SX (RS)		0.2	0.0	0.4	0.0	0.0	0.0
	SY (RS)		0.0	0.3	0.1	0.0	0.0	0.0
	RC ENV~1	Max	0.2	0.3	14.9	0.0	0.0	0.0
		Min	-0.2	-0.3	8.0	0.0	0.0	0.0
	RC ENV~2	Max	0.1	0.0	10.9	0.0	0.0	0.0
		Min	-0.1	-0.0	8.4	0.0	0.0	0.0
239	SX (RS)		0.1	0.0	0.3	0.0	0.0	0.0
	SY (RS)		0.0	0.1	0.1	0.0	0.0	0.0
	RC ENV~1	Max	0.1	0.1	7.4	0.0	0.0	0.0

	Min	-0.1	-0.1	4.0	0.0	0.0	0.0
RC ENV~2	Max	0.0	0.0	5.5	0.0	0.0	0.0
	Min	-0.0	-0.0	4.3	0.0	0.0	0.0
240	SX (RS)	0.2	0.0	0.3	0.0	0.0	0.0
	SY (RS)	0.0	0.3	0.1	0.0	0.0	0.0
RC ENV~1	Max	0.2	0.3	15.1	0.0	0.0	0.0
	Min	-0.2	-0.3	8.1	0.0	0.0	0.0
RC ENV~2	Max	0.1	-0.0	11.0	0.0	0.0	0.0
	Min	-0.1	-0.0	8.4	0.0	0.0	0.0
241	SX (RS)	0.2	0.0	0.4	0.0	0.0	0.0
	SY (RS)	0.0	0.3	0.1	0.0	0.0	0.0
RC ENV~1	Max	0.2	0.3	15.0	0.0	0.0	0.0
	Min	-0.2	-0.3	8.0	0.0	0.0	0.0
RC ENV~2	Max	0.1	0.0	11.0	0.0	0.0	0.0
	Min	-0.1	-0.0	8.4	0.0	0.0	0.0
242	SX (RS)	0.1	0.0	0.3	0.0	0.0	0.0
	SY (RS)	0.0	0.1	0.1	0.0	0.0	0.0
RC ENV~1	Max	0.1	0.1	7.5	0.0	0.0	0.0
	Min	-0.1	-0.1	4.0	0.0	0.0	0.0
RC ENV~2	Max	0.0	0.0	5.5	0.0	0.0	0.0
	Min	-0.0	-0.0	4.2	0.0	0.0	0.0
243	SX (RS)	0.2	0.0	0.4	0.0	0.0	0.0
	SY (RS)	0.0	0.3	0.2	0.0	0.0	0.0
RC ENV~1	Max	0.2	0.3	15.2	0.0	0.0	0.0
	Min	-0.2	-0.3	8.0	0.0	0.0	0.0
RC ENV~2	Max	0.1	-0.0	11.1	0.0	0.0	0.0
	Min	-0.1	-0.0	8.4	0.0	0.0	0.0
244	SX (RS)	0.2	0.0	0.5	0.0	0.0	0.0
	SY (RS)	0.0	0.3	0.2	0.0	0.0	0.0
RC ENV~1	Max	0.2	0.3	15.2	0.0	0.0	0.0
	Min	-0.2	-0.3	7.9	0.0	0.0	0.0
RC ENV~2	Max	0.1	-0.0	11.1	0.0	0.0	0.0
	Min	-0.1	-0.0	8.4	0.0	0.0	0.0
245	SX (RS)	0.1	0.0	0.3	0.0	0.0	0.0
	SY (RS)	0.0	0.1	0.1	0.0	0.0	0.0
RC ENV~1	Max	0.1	0.1	7.6	0.0	0.0	0.0
	Min	-0.1	-0.1	3.9	0.0	0.0	0.0
RC ENV~2	Max	0.0	0.0	5.6	0.0	0.0	0.0
	Min	-0.0	-0.0	4.2	0.0	0.0	0.0
246	SX (RS)	0.2	0.0	0.4	0.0	0.0	0.0
	SY (RS)	0.0	0.3	0.2	0.0	0.0	0.0
RC ENV~1	Max	0.2	0.3	15.4	0.0	0.0	0.0
	Min	-0.2	-0.3	8.0	0.0	0.0	0.0
RC ENV~2	Max	0.1	-0.0	11.2	0.0	0.0	0.0
	Min	-0.1	-0.0	8.3	0.0	0.0	0.0
247	SX (RS)	0.2	0.0	0.5	0.0	0.0	0.0
	SY (RS)	0.0	0.3	0.3	0.0	0.0	0.0
RC ENV~1	Max	0.2	0.3	15.3	0.0	0.0	0.0
	Min	-0.2	-0.3	7.9	0.0	0.0	0.0
RC ENV~2	Max	0.1	-0.0	11.2	0.0	0.0	0.0
	Min	-0.1	-0.0	8.4	0.0	0.0	0.0
248	SX (RS)	0.1	0.0	0.3	0.0	0.0	0.0
	SY (RS)	0.0	0.1	0.1	0.0	0.0	0.0

	RC ENV~1	Max	0.1	0.1	7.7	0.0	0.0	0.0
		Min	-0.1	-0.1	3.9	0.0	0.0	0.0
	RC ENV~2	Max	0.0	0.0	5.6	0.0	0.0	0.0
		Min	-0.0	-0.0	4.2	0.0	0.0	0.0
401	SX (RS)		0.2	0.0	0.3	0.0	0.0	0.0
	SY (RS)		0.0	0.3	0.3	0.0	0.0	0.0
	RC ENV~1	Max	0.2	0.3	12.9	0.0	0.0	0.0
		Min	-0.2	-0.3	7.9	0.0	0.0	0.0
	RC ENV~2	Max	0.1	0.0	9.6	0.0	0.0	0.0
		Min	-0.1	0.0	8.1	0.0	0.0	0.0
402	SX (RS)		0.2	0.0	0.2	0.0	0.0	0.0
	SY (RS)		0.0	0.3	0.3	0.0	0.0	0.0
	RC ENV~1	Max	0.2	0.3	12.7	0.0	0.0	0.0
		Min	-0.2	-0.3	7.8	0.0	0.0	0.0
	RC ENV~2	Max	0.1	0.0	9.5	0.0	0.0	0.0
		Min	-0.1	0.0	8.0	0.0	0.0	0.0
403	SX (RS)		0.2	0.0	0.1	0.0	0.0	0.0
	SY (RS)		0.0	0.3	0.3	0.0	0.0	0.0
	RC ENV~1	Max	0.2	0.3	12.5	0.0	0.0	0.0
		Min	-0.2	-0.3	7.7	0.0	0.0	0.0
	RC ENV~2	Max	0.1	0.0	9.3	0.0	0.0	0.0
		Min	-0.1	0.0	7.9	0.0	0.0	0.0
404	SX (RS)		0.2	0.0	0.1	0.0	0.0	0.0
	SY (RS)		0.0	0.3	0.3	0.0	0.0	0.0
	RC ENV~1	Max	0.2	0.3	12.4	0.0	0.0	0.0
		Min	-0.2	-0.3	7.6	0.0	0.0	0.0
	RC ENV~2	Max	0.1	0.0	9.3	0.0	0.0	0.0
		Min	-0.1	0.0	7.8	0.0	0.0	0.0
405	SX (RS)		0.2	0.0	0.1	0.0	0.0	0.0
	SY (RS)		0.0	0.3	0.3	0.0	0.0	0.0
	RC ENV~1	Max	0.2	0.3	12.4	0.0	0.0	0.0
		Min	-0.2	-0.3	7.5	0.0	0.0	0.0
	RC ENV~2	Max	0.1	0.0	9.2	0.0	0.0	0.0
		Min	-0.1	0.0	7.8	0.0	0.0	0.0
406	SX (RS)		0.2	0.0	0.1	0.0	0.0	0.0
	SY (RS)		0.0	0.3	0.3	0.0	0.0	0.0
	RC ENV~1	Max	0.2	0.3	12.4	0.0	0.0	0.0
		Min	-0.2	-0.3	7.5	0.0	0.0	0.0
	RC ENV~2	Max	0.1	0.0	9.2	0.0	0.0	0.0
		Min	-0.1	0.0	7.8	0.0	0.0	0.0
407	SX (RS)		0.2	0.0	0.0	0.0	0.0	0.0
	SY (RS)		0.0	0.3	0.3	0.0	0.0	0.0
	RC ENV~1	Max	0.2	0.3	12.4	0.0	0.0	0.0
		Min	-0.2	-0.3	7.5	0.0	0.0	0.0
	RC ENV~2	Max	0.1	0.0	9.2	0.0	0.0	0.0
		Min	-0.1	0.0	7.8	0.0	0.0	0.0
408	SX (RS)		0.2	0.0	0.0	0.0	0.0	0.0
	SY (RS)		0.0	0.3	0.3	0.0	0.0	0.0
	RC ENV~1	Max	0.2	0.3	12.4	0.0	0.0	0.0
		Min	-0.2	-0.3	7.5	0.0	0.0	0.0
	RC ENV~2	Max	0.1	0.0	9.2	0.0	0.0	0.0
		Min	-0.1	0.0	7.8	0.0	0.0	0.0

409	SX (RS)	0.2	0.0	0.3	0.0	0.0	0.0
	SY (RS)	0.0	0.3	0.2	0.0	0.0	0.0
RC ENV~1	Max	0.2	0.3	12.9	0.0	0.0	0.0
	Min	-0.2	-0.3	7.9	0.0	0.0	0.0
RC ENV~2	Max	0.1	0.0	9.6	0.0	0.0	0.0
	Min	-0.1	0.0	8.2	0.0	0.0	0.0
410	SX (RS)	0.2	0.0	0.2	0.0	0.0	0.0
	SY (RS)	0.0	0.3	0.2	0.0	0.0	0.0
RC ENV~1	Max	0.2	0.3	12.8	0.0	0.0	0.0
	Min	-0.2	-0.3	7.9	0.0	0.0	0.0
RC ENV~2	Max	0.1	0.0	9.5	0.0	0.0	0.0
	Min	-0.1	0.0	8.1	0.0	0.0	0.0
411	SX (RS)	0.2	0.0	0.1	0.0	0.0	0.0
	SY (RS)	0.0	0.3	0.2	0.0	0.0	0.0
RC ENV~1	Max	0.2	0.3	12.6	0.0	0.0	0.0
	Min	-0.2	-0.3	7.8	0.0	0.0	0.0
RC ENV~2	Max	0.1	0.0	9.4	0.0	0.0	0.0
	Min	-0.1	0.0	8.0	0.0	0.0	0.0
412	SX (RS)	0.2	0.0	0.1	0.0	0.0	0.0
	SY (RS)	0.0	0.3	0.2	0.0	0.0	0.0
RC ENV~1	Max	0.2	0.3	12.5	0.0	0.0	0.0
	Min	-0.2	-0.3	7.7	0.0	0.0	0.0
RC ENV~2	Max	0.1	0.0	9.3	0.0	0.0	0.0
	Min	-0.1	0.0	7.9	0.0	0.0	0.0
413	SX (RS)	0.2	0.0	0.1	0.0	0.0	0.0
	SY (RS)	0.0	0.3	0.2	0.0	0.0	0.0
RC ENV~1	Max	0.2	0.3	12.4	0.0	0.0	0.0
	Min	-0.2	-0.3	7.6	0.0	0.0	0.0
RC ENV~2	Max	0.1	0.0	9.3	0.0	0.0	0.0
	Min	-0.1	0.0	7.8	0.0	0.0	0.0
414	SX (RS)	0.2	0.0	0.1	0.0	0.0	0.0
	SY (RS)	0.0	0.3	0.2	0.0	0.0	0.0
RC ENV~1	Max	0.2	0.3	12.4	0.0	0.0	0.0
	Min	-0.2	-0.3	7.6	0.0	0.0	0.0
RC ENV~2	Max	0.1	0.0	9.3	0.0	0.0	0.0
	Min	-0.1	0.0	7.8	0.0	0.0	0.0
415	SX (RS)	0.2	0.0	0.0	0.0	0.0	0.0
	SY (RS)	0.0	0.3	0.2	0.0	0.0	0.0
RC ENV~1	Max	0.2	0.3	12.4	0.0	0.0	0.0
	Min	-0.2	-0.3	7.6	0.0	0.0	0.0
RC ENV~2	Max	0.1	0.0	9.3	0.0	0.0	0.0
	Min	-0.1	0.0	7.8	0.0	0.0	0.0
416	SX (RS)	0.2	0.0	0.0	0.0	0.0	0.0
	SY (RS)	0.0	0.3	0.2	0.0	0.0	0.0
RC ENV~1	Max	0.2	0.3	12.4	0.0	0.0	0.0
	Min	-0.2	-0.3	7.6	0.0	0.0	0.0
RC ENV~2	Max	0.1	0.0	9.3	0.0	0.0	0.0
	Min	-0.1	0.0	7.8	0.0	0.0	0.0
417	SX (RS)	0.2	0.0	0.2	0.0	0.0	0.0
	SY (RS)	0.0	0.3	0.1	0.0	0.0	0.0
RC ENV~1	Max	0.2	0.3	12.9	0.0	0.0	0.0
	Min	-0.2	-0.3	8.0	0.0	0.0	0.0
RC ENV~2	Max	0.1	0.0	9.7	0.0	0.0	0.0

	Min	-0.1	0.0	8.2	0.0	0.0	0.0
418	SX (RS)	0.2	0.0	0.2	0.0	0.0	0.0
	SY (RS)	0.0	0.3	0.1	0.0	0.0	0.0
RC ENV~1	Max	0.2	0.3	12.8	0.0	0.0	0.0
	Min	-0.2	-0.3	7.9	0.0	0.0	0.0
RC ENV~2	Max	0.1	0.0	9.6	0.0	0.0	0.0
	Min	-0.1	0.0	8.1	0.0	0.0	0.0
419	SX (RS)	0.2	0.0	0.1	0.0	0.0	0.0
	SY (RS)	0.0	0.3	0.1	0.0	0.0	0.0
RC ENV~1	Max	0.2	0.3	12.7	0.0	0.0	0.0
	Min	-0.2	-0.3	7.9	0.0	0.0	0.0
RC ENV~2	Max	0.1	0.0	9.5	0.0	0.0	0.0
	Min	-0.1	0.0	8.0	0.0	0.0	0.0
420	SX (RS)	0.2	0.0	0.1	0.0	0.0	0.0
	SY (RS)	0.0	0.3	0.2	0.0	0.0	0.0
RC ENV~1	Max	0.2	0.3	12.6	0.0	0.0	0.0
	Min	-0.2	-0.3	7.8	0.0	0.0	0.0
RC ENV~2	Max	0.1	0.0	9.4	0.0	0.0	0.0
	Min	-0.1	0.0	7.9	0.0	0.0	0.0
421	SX (RS)	0.2	0.0	0.1	0.0	0.0	0.0
	SY (RS)	0.0	0.3	0.2	0.0	0.0	0.0
RC ENV~1	Max	0.2	0.3	12.5	0.0	0.0	0.0
	Min	-0.2	-0.3	7.7	0.0	0.0	0.0
RC ENV~2	Max	0.1	0.0	9.3	0.0	0.0	0.0
	Min	-0.1	0.0	7.9	0.0	0.0	0.0
422	SX (RS)	0.2	0.0	0.1	0.0	0.0	0.0
	SY (RS)	0.0	0.3	0.2	0.0	0.0	0.0
RC ENV~1	Max	0.2	0.3	12.5	0.0	0.0	0.0
	Min	-0.2	-0.3	7.7	0.0	0.0	0.0
RC ENV~2	Max	0.1	0.0	9.3	0.0	0.0	0.0
	Min	-0.1	0.0	7.9	0.0	0.0	0.0
423	SX (RS)	0.2	0.0	0.0	0.0	0.0	0.0
	SY (RS)	0.0	0.3	0.2	0.0	0.0	0.0
RC ENV~1	Max	0.2	0.3	12.5	0.0	0.0	0.0
	Min	-0.2	-0.3	7.7	0.0	0.0	0.0
RC ENV~2	Max	0.1	0.0	9.3	0.0	0.0	0.0
	Min	-0.1	0.0	7.9	0.0	0.0	0.0
424	SX (RS)	0.2	0.0	0.0	0.0	0.0	0.0
	SY (RS)	0.0	0.3	0.2	0.0	0.0	0.0
RC ENV~1	Max	0.2	0.3	12.5	0.0	0.0	0.0
	Min	-0.2	-0.3	7.7	0.0	0.0	0.0
RC ENV~2	Max	0.1	0.0	9.3	0.0	0.0	0.0
	Min	-0.1	0.0	7.9	0.0	0.0	0.0
425	SX (RS)	0.2	0.0	0.2	0.0	0.0	0.0
	SY (RS)	0.0	0.3	0.1	0.0	0.0	0.0
RC ENV~1	Max	0.2	0.3	13.0	0.0	0.0	0.0
	Min	-0.2	-0.3	8.0	0.0	0.0	0.0
RC ENV~2	Max	0.1	0.0	9.7	0.0	0.0	0.0
	Min	-0.1	0.0	8.3	0.0	0.0	0.0
426	SX (RS)	0.2	0.0	0.2	0.0	0.0	0.0
	SY (RS)	0.0	0.3	0.1	0.0	0.0	0.0
RC ENV~1	Max	0.2	0.3	12.9	0.0	0.0	0.0
	Min	-0.2	-0.3	8.0	0.0	0.0	0.0

	RC ENV~2	Max	0.1	0.0	9.6	0.0	0.0	0.0
		Min	-0.1	0.0	8.1	0.0	0.0	0.0
427	SX (RS)		0.2	0.0	0.1	0.0	0.0	0.0
	SY (RS)		0.0	0.3	0.1	0.0	0.0	0.0
	RC ENV~1	Max	0.2	0.3	12.7	0.0	0.0	0.0
		Min	-0.2	-0.3	7.9	0.0	0.0	0.0
	RC ENV~2	Max	0.1	0.0	9.5	0.0	0.0	0.0
		Min	-0.1	0.0	8.0	0.0	0.0	0.0
428	SX (RS)		0.2	0.0	0.1	0.0	0.0	0.0
	SY (RS)		0.0	0.3	0.1	0.0	0.0	0.0
	RC ENV~1	Max	0.2	0.3	12.6	0.0	0.0	0.0
		Min	-0.2	-0.3	7.9	0.0	0.0	0.0
	RC ENV~2	Max	0.1	0.0	9.4	0.0	0.0	0.0
		Min	-0.1	0.0	8.0	0.0	0.0	0.0
429	SX (RS)		0.2	0.0	0.1	0.0	0.0	0.0
	SY (RS)		0.0	0.3	0.1	0.0	0.0	0.0
	RC ENV~1	Max	0.2	0.3	12.6	0.0	0.0	0.0
		Min	-0.2	-0.3	7.8	0.0	0.0	0.0
	RC ENV~2	Max	0.1	0.0	9.4	0.0	0.0	0.0
		Min	-0.1	0.0	7.9	0.0	0.0	0.0
430	SX (RS)		0.2	0.0	0.1	0.0	0.0	0.0
	SY (RS)		0.0	0.3	0.1	0.0	0.0	0.0
	RC ENV~1	Max	0.2	0.3	12.6	0.0	0.0	0.0
		Min	-0.2	-0.3	7.8	0.0	0.0	0.0
	RC ENV~2	Max	0.1	0.0	9.4	0.0	0.0	0.0
		Min	-0.1	0.0	7.9	0.0	0.0	0.0
431	SX (RS)		0.2	0.0	0.0	0.0	0.0	0.0
	SY (RS)		0.0	0.3	0.1	0.0	0.0	0.0
	RC ENV~1	Max	0.2	0.3	12.6	0.0	0.0	0.0
		Min	-0.2	-0.3	7.7	0.0	0.0	0.0
	RC ENV~2	Max	0.1	0.0	9.4	0.0	0.0	0.0
		Min	-0.1	0.0	7.9	0.0	0.0	0.0
432	SX (RS)		0.2	0.0	0.0	0.0	0.0	0.0
	SY (RS)		0.0	0.3	0.1	0.0	0.0	0.0
	RC ENV~1	Max	0.2	0.3	12.6	0.0	0.0	0.0
		Min	-0.2	-0.3	7.7	0.0	0.0	0.0
	RC ENV~2	Max	0.1	0.0	9.4	0.0	0.0	0.0
		Min	-0.1	0.0	7.9	0.0	0.0	0.0
433	SX (RS)		0.2	0.0	0.2	0.0	0.0	0.0
	SY (RS)		0.0	0.3	0.1	0.0	0.0	0.0
	RC ENV~1	Max	0.2	0.3	13.0	0.0	0.0	0.0
		Min	-0.2	-0.3	8.1	0.0	0.0	0.0
	RC ENV~2	Max	0.1	0.0	9.7	0.0	0.0	0.0
		Min	-0.1	0.0	8.3	0.0	0.0	0.0
434	SX (RS)		0.2	0.0	0.1	0.0	0.0	0.0
	SY (RS)		0.0	0.3	0.1	0.0	0.0	0.0
	RC ENV~1	Max	0.2	0.3	12.9	0.0	0.0	0.0
		Min	-0.2	-0.3	8.0	0.0	0.0	0.0
	RC ENV~2	Max	0.1	0.0	9.6	0.0	0.0	0.0
		Min	-0.1	0.0	8.2	0.0	0.0	0.0
435	SX (RS)		0.2	0.0	0.1	0.0	0.0	0.0
	SY (RS)		0.0	0.3	0.1	0.0	0.0	0.0

	RC ENV~1	Max	0.2	0.3	12.8	0.0	0.0	0.0
		Min	-0.2	-0.3	8.0	0.0	0.0	0.0
	RC ENV~2	Max	0.1	0.0	9.5	0.0	0.0	0.0
		Min	-0.1	0.0	8.1	0.0	0.0	0.0
436		SX (RS)	0.2	0.0	0.1	0.0	0.0	0.0
		SY (RS)	0.0	0.3	0.1	0.0	0.0	0.0
	RC ENV~1	Max	0.2	0.3	12.7	0.0	0.0	0.0
		Min	-0.2	-0.3	7.9	0.0	0.0	0.0
	RC ENV~2	Max	0.1	0.0	9.5	0.0	0.0	0.0
		Min	-0.1	0.0	8.0	0.0	0.0	0.0
437		SX (RS)	0.2	0.0	0.1	0.0	0.0	0.0
		SY (RS)	0.0	0.3	0.1	0.0	0.0	0.0
	RC ENV~1	Max	0.2	0.3	12.6	0.0	0.0	0.0
		Min	-0.2	-0.3	7.9	0.0	0.0	0.0
	RC ENV~2	Max	0.1	0.0	9.4	0.0	0.0	0.0
		Min	-0.1	0.0	7.9	0.0	0.0	0.0
438		SX (RS)	0.2	0.0	0.1	0.0	0.0	0.0
		SY (RS)	0.0	0.3	0.1	0.0	0.0	0.0
	RC ENV~1	Max	0.2	0.3	12.6	0.0	0.0	0.0
		Min	-0.2	-0.3	7.8	0.0	0.0	0.0
	RC ENV~2	Max	0.1	0.0	9.4	0.0	0.0	0.0
		Min	-0.1	0.0	7.9	0.0	0.0	0.0
439		SX (RS)	0.2	0.0	0.0	0.0	0.0	0.0
		SY (RS)	0.0	0.3	0.1	0.0	0.0	0.0
	RC ENV~1	Max	0.2	0.3	12.7	0.0	0.0	0.0
		Min	-0.2	-0.3	7.8	0.0	0.0	0.0
	RC ENV~2	Max	0.1	0.0	9.4	0.0	0.0	0.0
		Min	-0.1	0.0	7.9	0.0	0.0	0.0
440		SX (RS)	0.2	0.0	0.0	0.0	0.0	0.0
		SY (RS)	0.0	0.3	0.1	0.0	0.0	0.0
	RC ENV~1	Max	0.2	0.3	12.7	0.0	0.0	0.0
		Min	-0.2	-0.3	7.8	0.0	0.0	0.0
	RC ENV~2	Max	0.1	0.0	9.4	0.0	0.0	0.0
		Min	-0.1	0.0	7.9	0.0	0.0	0.0
441		SX (RS)	0.2	0.0	0.2	0.0	0.0	0.0
		SY (RS)	0.0	0.3	0.0	0.0	0.0	0.0
	RC ENV~1	Max	0.2	0.3	13.1	0.0	0.0	0.0
		Min	-0.2	-0.3	8.1	0.0	0.0	0.0
	RC ENV~2	Max	0.1	0.0	9.8	0.0	0.0	0.0
		Min	-0.1	0.0	8.3	0.0	0.0	0.0
442		SX (RS)	0.2	0.0	0.1	0.0	0.0	0.0
		SY (RS)	0.0	0.3	0.0	0.0	0.0	0.0
	RC ENV~1	Max	0.2	0.3	13.0	0.0	0.0	0.0
		Min	-0.2	-0.3	8.1	0.0	0.0	0.0
	RC ENV~2	Max	0.1	0.0	9.7	0.0	0.0	0.0
		Min	-0.1	0.0	8.2	0.0	0.0	0.0
443		SX (RS)	0.2	0.0	0.1	0.0	0.0	0.0
		SY (RS)	0.0	0.3	0.0	0.0	0.0	0.0
	RC ENV~1	Max	0.2	0.3	12.8	0.0	0.0	0.0
		Min	-0.2	-0.3	8.0	0.0	0.0	0.0
	RC ENV~2	Max	0.1	0.0	9.6	0.0	0.0	0.0
		Min	-0.1	0.0	8.1	0.0	0.0	0.0
444		SX (RS)	0.2	0.0	0.1	0.0	0.0	0.0

	SY (RS)	0.0	0.3	0.0	0.0	0.0	0.0
	RC ENV~1 Max	0.2	0.3	12.7	0.0	0.0	0.0
	Min	-0.2	-0.3	7.9	0.0	0.0	0.0
	RC ENV~2 Max	0.1	0.0	9.5	0.0	0.0	0.0
	Min	-0.1	0.0	8.0	0.0	0.0	0.0
445	SX (RS)	0.2	0.0	0.1	0.0	0.0	0.0
	SY (RS)	0.0	0.3	0.1	0.0	0.0	0.0
	RC ENV~1 Max	0.2	0.3	12.7	0.0	0.0	0.0
	Min	-0.2	-0.3	7.9	0.0	0.0	0.0
	RC ENV~2 Max	0.1	0.0	9.5	0.0	0.0	0.0
	Min	-0.1	0.0	7.9	0.0	0.0	0.0
446	SX (RS)	0.2	0.0	0.1	0.0	0.0	0.0
	SY (RS)	0.0	0.3	0.1	0.0	0.0	0.0
	RC ENV~1 Max	0.2	0.3	12.7	0.0	0.0	0.0
	Min	-0.2	-0.3	7.9	0.0	0.0	0.0
	RC ENV~2 Max	0.1	0.0	9.5	0.0	0.0	0.0
	Min	-0.1	0.0	7.9	0.0	0.0	0.0
447	SX (RS)	0.2	0.0	0.1	0.0	0.0	0.0
	SY (RS)	0.0	0.3	0.1	0.0	0.0	0.0
	RC ENV~1 Max	0.2	0.3	12.8	0.0	0.0	0.0
	Min	-0.2	-0.3	7.9	0.0	0.0	0.0
	RC ENV~2 Max	0.1	0.0	9.5	0.0	0.0	0.0
	Min	-0.1	0.0	8.0	0.0	0.0	0.0
448	SX (RS)	0.2	0.0	0.0	0.0	0.0	0.0
	SY (RS)	0.0	0.3	0.1	0.0	0.0	0.0
	RC ENV~1 Max	0.2	0.3	12.8	0.0	0.0	0.0
	Min	-0.2	-0.3	7.9	0.0	0.0	0.0
	RC ENV~2 Max	0.1	0.0	9.5	0.0	0.0	0.0
	Min	-0.1	0.0	8.0	0.0	0.0	0.0
449	SX (RS)	0.2	0.0	0.2	0.0	0.0	0.0
	SY (RS)	0.0	0.3	0.0	0.0	0.0	0.0
	RC ENV~1 Max	0.2	0.3	13.1	0.0	0.0	0.0
	Min	-0.2	-0.3	8.2	0.0	0.0	0.0
	RC ENV~2 Max	0.1	0.0	9.8	0.0	0.0	0.0
	Min	-0.1	0.0	8.3	0.0	0.0	0.0
450	SX (RS)	0.2	0.0	0.1	0.0	0.0	0.0
	SY (RS)	0.0	0.3	0.0	0.0	0.0	0.0
	RC ENV~1 Max	0.2	0.3	13.0	0.0	0.0	0.0
	Min	-0.2	-0.3	8.1	0.0	0.0	0.0
	RC ENV~2 Max	0.1	0.0	9.7	0.0	0.0	0.0
	Min	-0.1	0.0	8.2	0.0	0.0	0.0
451	SX (RS)	0.2	0.0	0.1	0.0	0.0	0.0
	SY (RS)	0.0	0.3	0.0	0.0	0.0	0.0
	RC ENV~1 Max	0.2	0.3	12.8	0.0	0.0	0.0
	Min	-0.2	-0.3	8.0	0.0	0.0	0.0
	RC ENV~2 Max	0.1	0.0	9.6	0.0	0.0	0.0
	Min	-0.1	0.0	8.1	0.0	0.0	0.0
452	SX (RS)	0.2	0.0	0.1	0.0	0.0	0.0
	SY (RS)	0.0	0.3	0.0	0.0	0.0	0.0
	RC ENV~1 Max	0.2	0.3	12.7	0.0	0.0	0.0
	Min	-0.2	-0.3	7.9	0.0	0.0	0.0
	RC ENV~2 Max	0.1	0.0	9.5	0.0	0.0	0.0
	Min	-0.1	0.0	8.0	0.0	0.0	0.0

453	SX (RS)	0.2	0.0	0.1	0.0	0.0	0.0
	SY (RS)	0.0	0.3	0.0	0.0	0.0	0.0
RC ENV~1	Max	0.2	0.3	12.7	0.0	0.0	0.0
	Min	-0.2	-0.3	7.8	0.0	0.0	0.0
RC ENV~2	Max	0.1	0.0	9.5	0.0	0.0	0.0
	Min	-0.1	0.0	7.9	0.0	0.0	0.0
454	SX (RS)	0.2	0.0	0.1	0.0	0.0	0.0
	SY (RS)	0.0	0.3	0.0	0.0	0.0	0.0
RC ENV~1	Max	0.2	0.3	12.7	0.0	0.0	0.0
	Min	-0.2	-0.3	7.9	0.0	0.0	0.0
RC ENV~2	Max	0.1	0.0	9.5	0.0	0.0	0.0
	Min	-0.1	0.0	7.9	0.0	0.0	0.0
455	SX (RS)	0.2	0.0	0.1	0.0	0.0	0.0
	SY (RS)	0.0	0.3	0.0	0.0	0.0	0.0
RC ENV~1	Max	0.2	0.3	12.8	0.0	0.0	0.0
	Min	-0.2	-0.3	7.9	0.0	0.0	0.0
RC ENV~2	Max	0.1	0.0	9.5	0.0	0.0	0.0
	Min	-0.1	0.0	8.0	0.0	0.0	0.0
456	SX (RS)	0.2	0.0	0.0	0.0	0.0	0.0
	SY (RS)	0.0	0.3	0.3	0.0	0.0	0.0
RC ENV~1	Max	0.2	0.3	12.4	0.0	0.0	0.0
	Min	-0.2	-0.3	7.5	0.0	0.0	0.0
RC ENV~2	Max	0.1	0.0	9.2	0.0	0.0	0.0
	Min	-0.1	0.0	7.8	0.0	0.0	0.0
457	SX (RS)	0.2	0.0	0.1	0.0	0.0	0.0
	SY (RS)	0.0	0.3	0.3	0.0	0.0	0.0
RC ENV~1	Max	0.2	0.3	12.3	0.0	0.0	0.0
	Min	-0.2	-0.3	7.5	0.0	0.0	0.0
RC ENV~2	Max	0.1	0.0	9.2	0.0	0.0	0.0
	Min	-0.1	0.0	7.8	0.0	0.0	0.0
458	SX (RS)	0.2	0.0	0.1	0.0	0.0	0.0
	SY (RS)	0.0	0.3	0.3	0.0	0.0	0.0
RC ENV~1	Max	0.2	0.3	12.3	0.0	0.0	0.0
	Min	-0.2	-0.3	7.5	0.0	0.0	0.0
RC ENV~2	Max	0.1	0.0	9.2	0.0	0.0	0.0
	Min	-0.1	0.0	7.8	0.0	0.0	0.0
459	SX (RS)	0.2	0.0	0.1	0.0	0.0	0.0
	SY (RS)	0.0	0.3	0.3	0.0	0.0	0.0
RC ENV~1	Max	0.2	0.3	12.4	0.0	0.0	0.0
	Min	-0.2	-0.3	7.6	0.0	0.0	0.0
RC ENV~2	Max	0.1	0.0	9.2	0.0	0.0	0.0
	Min	-0.1	0.0	7.8	0.0	0.0	0.0
460	SX (RS)	0.2	0.0	0.1	0.0	0.0	0.0
	SY (RS)	0.0	0.3	0.3	0.0	0.0	0.0
RC ENV~1	Max	0.2	0.3	12.5	0.0	0.0	0.0
	Min	-0.2	-0.3	7.7	0.0	0.0	0.0
RC ENV~2	Max	0.1	0.0	9.3	0.0	0.0	0.0
	Min	-0.1	0.0	7.9	0.0	0.0	0.0
461	SX (RS)	0.2	0.0	0.2	0.0	0.0	0.0
	SY (RS)	0.0	0.3	0.3	0.0	0.0	0.0
RC ENV~1	Max	0.2	0.3	12.6	0.0	0.0	0.0
	Min	-0.2	-0.3	7.8	0.0	0.0	0.0

	RC ENV~2	Max	0.1	0.0	9.4	0.0	0.0	0.0
		Min	-0.1	0.0	8.0	0.0	0.0	0.0
462	SX (RS)		0.2	0.0	0.3	0.0	0.0	0.0
	SY (RS)		0.0	0.3	0.3	0.0	0.0	0.0
	RC ENV~1	Max	0.2	0.3	12.8	0.0	0.0	0.0
		Min	-0.2	-0.3	7.9	0.0	0.0	0.0
	RC ENV~2	Max	0.1	0.0	9.5	0.0	0.0	0.0
		Min	-0.1	0.0	8.1	0.0	0.0	0.0
463	SX (RS)		0.2	0.0	0.0	0.0	0.0	0.0
	SY (RS)		0.0	0.3	0.2	0.0	0.0	0.0
	RC ENV~1	Max	0.2	0.3	12.4	0.0	0.0	0.0
		Min	-0.2	-0.3	7.6	0.0	0.0	0.0
	RC ENV~2	Max	0.1	0.0	9.3	0.0	0.0	0.0
		Min	-0.1	0.0	7.8	0.0	0.0	0.0
464	SX (RS)		0.2	0.0	0.1	0.0	0.0	0.0
	SY (RS)		0.0	0.3	0.2	0.0	0.0	0.0
	RC ENV~1	Max	0.2	0.3	12.4	0.0	0.0	0.0
		Min	-0.2	-0.3	7.6	0.0	0.0	0.0
	RC ENV~2	Max	0.1	0.0	9.2	0.0	0.0	0.0
		Min	-0.1	0.0	7.8	0.0	0.0	0.0
465	SX (RS)		0.2	0.0	0.1	0.0	0.0	0.0
	SY (RS)		0.0	0.3	0.2	0.0	0.0	0.0
	RC ENV~1	Max	0.2	0.3	12.4	0.0	0.0	0.0
		Min	-0.2	-0.3	7.6	0.0	0.0	0.0
	RC ENV~2	Max	0.1	0.0	9.2	0.0	0.0	0.0
		Min	-0.1	0.0	7.9	0.0	0.0	0.0
466	SX (RS)		0.2	0.0	0.1	0.0	0.0	0.0
	SY (RS)		0.0	0.3	0.2	0.0	0.0	0.0
	RC ENV~1	Max	0.2	0.3	12.5	0.0	0.0	0.0
		Min	-0.2	-0.3	7.7	0.0	0.0	0.0
	RC ENV~2	Max	0.1	0.0	9.3	0.0	0.0	0.0
		Min	-0.1	0.0	7.9	0.0	0.0	0.0
467	SX (RS)		0.2	0.0	0.1	0.0	0.0	0.0
	SY (RS)		0.0	0.3	0.2	0.0	0.0	0.0
	RC ENV~1	Max	0.2	0.3	12.6	0.0	0.0	0.0
		Min	-0.2	-0.3	7.8	0.0	0.0	0.0
	RC ENV~2	Max	0.1	0.0	9.4	0.0	0.0	0.0
		Min	-0.1	0.0	8.0	0.0	0.0	0.0
468	SX (RS)		0.2	0.0	0.2	0.0	0.0	0.0
	SY (RS)		0.0	0.3	0.2	0.0	0.0	0.0
	RC ENV~1	Max	0.2	0.3	12.7	0.0	0.0	0.0
		Min	-0.2	-0.3	7.9	0.0	0.0	0.0
	RC ENV~2	Max	0.1	0.0	9.5	0.0	0.0	0.0
		Min	-0.1	0.0	8.1	0.0	0.0	0.0
469	SX (RS)		0.2	0.0	0.3	0.0	0.0	0.0
	SY (RS)		0.0	0.3	0.2	0.0	0.0	0.0
	RC ENV~1	Max	0.2	0.3	12.9	0.0	0.0	0.0
		Min	-0.2	-0.3	7.9	0.0	0.0	0.0
	RC ENV~2	Max	0.1	0.0	9.6	0.0	0.0	0.0
		Min	-0.1	0.0	8.2	0.0	0.0	0.0
470	SX (RS)		0.2	0.0	0.0	0.0	0.0	0.0
	SY (RS)		0.0	0.3	0.2	0.0	0.0	0.0
	RC ENV~1	Max	0.2	0.3	12.5	0.0	0.0	0.0

	Min	-0.2	-0.3	7.7	0.0	0.0	0.0
RC ENV~2	Max	0.1	0.0	9.3	0.0	0.0	0.0
	Min	-0.1	0.0	7.9	0.0	0.0	0.0
471	SX (RS)	0.2	0.0	0.1	0.0	0.0	0.0
	SY (RS)	0.0	0.3	0.2	0.0	0.0	0.0
RC ENV~1	Max	0.2	0.3	12.5	0.0	0.0	0.0
	Min	-0.2	-0.3	7.7	0.0	0.0	0.0
RC ENV~2	Max	0.1	0.0	9.3	0.0	0.0	0.0
	Min	-0.1	0.0	7.9	0.0	0.0	0.0
472	SX (RS)	0.2	0.0	0.1	0.0	0.0	0.0
	SY (RS)	0.0	0.3	0.2	0.0	0.0	0.0
RC ENV~1	Max	0.2	0.3	12.5	0.0	0.0	0.0
	Min	-0.2	-0.3	7.7	0.0	0.0	0.0
RC ENV~2	Max	0.1	0.0	9.3	0.0	0.0	0.0
	Min	-0.1	0.0	7.9	0.0	0.0	0.0
473	SX (RS)	0.2	0.0	0.1	0.0	0.0	0.0
	SY (RS)	0.0	0.3	0.2	0.0	0.0	0.0
RC ENV~1	Max	0.2	0.3	12.6	0.0	0.0	0.0
	Min	-0.2	-0.3	7.8	0.0	0.0	0.0
RC ENV~2	Max	0.1	0.0	9.4	0.0	0.0	0.0
	Min	-0.1	0.0	8.0	0.0	0.0	0.0
474	SX (RS)	0.2	0.0	0.1	0.0	0.0	0.0
	SY (RS)	0.0	0.3	0.1	0.0	0.0	0.0
RC ENV~1	Max	0.2	0.3	12.7	0.0	0.0	0.0
	Min	-0.2	-0.3	7.9	0.0	0.0	0.0
RC ENV~2	Max	0.1	0.0	9.4	0.0	0.0	0.0
	Min	-0.1	0.0	8.0	0.0	0.0	0.0
475	SX (RS)	0.2	0.0	0.2	0.0	0.0	0.0
	SY (RS)	0.0	0.3	0.1	0.0	0.0	0.0
RC ENV~1	Max	0.2	0.3	12.8	0.0	0.0	0.0
	Min	-0.2	-0.3	8.0	0.0	0.0	0.0
RC ENV~2	Max	0.1	0.0	9.5	0.0	0.0	0.0
	Min	-0.1	0.0	8.1	0.0	0.0	0.0
476	SX (RS)	0.2	0.0	0.2	0.0	0.0	0.0
	SY (RS)	0.0	0.3	0.1	0.0	0.0	0.0
RC ENV~1	Max	0.2	0.3	12.9	0.0	0.0	0.0
	Min	-0.2	-0.3	8.0	0.0	0.0	0.0
RC ENV~2	Max	0.1	0.0	9.7	0.0	0.0	0.0
	Min	-0.1	0.0	8.2	0.0	0.0	0.0
477	SX (RS)	0.2	0.0	0.0	0.0	0.0	0.0
	SY (RS)	0.0	0.3	0.1	0.0	0.0	0.0
RC ENV~1	Max	0.2	0.3	12.6	0.0	0.0	0.0
	Min	-0.2	-0.3	7.8	0.0	0.0	0.0
RC ENV~2	Max	0.1	0.0	9.4	0.0	0.0	0.0
	Min	-0.1	0.0	7.9	0.0	0.0	0.0
478	SX (RS)	0.2	0.0	0.1	0.0	0.0	0.0
	SY (RS)	0.0	0.3	0.1	0.0	0.0	0.0
RC ENV~1	Max	0.2	0.3	12.6	0.0	0.0	0.0
	Min	-0.2	-0.3	7.8	0.0	0.0	0.0
RC ENV~2	Max	0.1	0.0	9.4	0.0	0.0	0.0
	Min	-0.1	0.0	7.9	0.0	0.0	0.0
479	SX (RS)	0.2	0.0	0.1	0.0	0.0	0.0
	SY (RS)	0.0	0.3	0.1	0.0	0.0	0.0

	RC ENV~1	Max	0.2	0.3	12.6	0.0	0.0	0.0
		Min	-0.2	-0.3	7.8	0.0	0.0	0.0
	RC ENV~2	Max	0.1	0.0	9.4	0.0	0.0	0.0
		Min	-0.1	0.0	7.9	0.0	0.0	0.0
480	SX (RS)		0.2	0.0	0.1	0.0	0.0	0.0
	SY (RS)		0.0	0.3	0.1	0.0	0.0	0.0
	RC ENV~1	Max	0.2	0.3	12.7	0.0	0.0	0.0
		Min	-0.2	-0.3	7.9	0.0	0.0	0.0
	RC ENV~2	Max	0.1	0.0	9.4	0.0	0.0	0.0
		Min	-0.1	0.0	8.0	0.0	0.0	0.0
481	SX (RS)		0.2	0.0	0.1	0.0	0.0	0.0
	SY (RS)		0.0	0.3	0.1	0.0	0.0	0.0
	RC ENV~1	Max	0.2	0.3	12.8	0.0	0.0	0.0
		Min	-0.2	-0.3	8.0	0.0	0.0	0.0
	RC ENV~2	Max	0.1	0.0	9.5	0.0	0.0	0.0
		Min	-0.1	0.0	8.1	0.0	0.0	0.0
482	SX (RS)		0.2	0.0	0.2	0.0	0.0	0.0
	SY (RS)		0.0	0.3	0.1	0.0	0.0	0.0
	RC ENV~1	Max	0.2	0.3	12.9	0.0	0.0	0.0
		Min	-0.2	-0.3	8.0	0.0	0.0	0.0
	RC ENV~2	Max	0.1	0.0	9.6	0.0	0.0	0.0
		Min	-0.1	0.0	8.2	0.0	0.0	0.0
483	SX (RS)		0.2	0.0	0.2	0.0	0.0	0.0
	SY (RS)		0.0	0.3	0.1	0.0	0.0	0.0
	RC ENV~1	Max	0.2	0.3	13.1	0.0	0.0	0.0
		Min	-0.2	-0.3	8.1	0.0	0.0	0.0
	RC ENV~2	Max	0.1	0.0	9.7	0.0	0.0	0.0
		Min	-0.1	0.0	8.3	0.0	0.0	0.0
484	SX (RS)		0.2	0.0	0.0	0.0	0.0	0.0
	SY (RS)		0.0	0.3	0.1	0.0	0.0	0.0
	RC ENV~1	Max	0.2	0.3	12.7	0.0	0.0	0.0
		Min	-0.2	-0.3	7.8	0.0	0.0	0.0
	RC ENV~2	Max	0.1	0.0	9.4	0.0	0.0	0.0
		Min	-0.1	0.0	7.9	0.0	0.0	0.0
485	SX (RS)		0.2	0.0	0.1	0.0	0.0	0.0
	SY (RS)		0.0	0.3	0.1	0.0	0.0	0.0
	RC ENV~1	Max	0.2	0.3	12.7	0.0	0.0	0.0
		Min	-0.2	-0.3	7.8	0.0	0.0	0.0
	RC ENV~2	Max	0.1	0.0	9.4	0.0	0.0	0.0
		Min	-0.1	0.0	7.9	0.0	0.0	0.0
486	SX (RS)		0.2	0.0	0.1	0.0	0.0	0.0
	SY (RS)		0.0	0.3	0.1	0.0	0.0	0.0
	RC ENV~1	Max	0.2	0.3	12.7	0.0	0.0	0.0
		Min	-0.2	-0.3	7.9	0.0	0.0	0.0
	RC ENV~2	Max	0.1	0.0	9.4	0.0	0.0	0.0
		Min	-0.1	0.0	8.0	0.0	0.0	0.0
487	SX (RS)		0.2	0.0	0.1	0.0	0.0	0.0
	SY (RS)		0.0	0.3	0.1	0.0	0.0	0.0
	RC ENV~1	Max	0.2	0.3	12.8	0.0	0.0	0.0
		Min	-0.2	-0.3	7.9	0.0	0.0	0.0
	RC ENV~2	Max	0.1	0.0	9.5	0.0	0.0	0.0
		Min	-0.1	0.0	8.0	0.0	0.0	0.0

488	SX (RS)	0.2	0.0	0.1	0.0	0.0	0.0
	SY (RS)	0.0	0.3	0.1	0.0	0.0	0.0
RC ENV~1	Max	0.2	0.3	12.9	0.0	0.0	0.0
	Min	-0.2	-0.3	8.0	0.0	0.0	0.0
RC ENV~2	Max	0.1	0.0	9.6	0.0	0.0	0.0
	Min	-0.1	0.0	8.1	0.0	0.0	0.0
489	SX (RS)	0.2	0.0	0.1	0.0	0.0	0.0
	SY (RS)	0.0	0.3	0.1	0.0	0.0	0.0
RC ENV~1	Max	0.2	0.3	13.0	0.0	0.0	0.0
	Min	-0.2	-0.3	8.1	0.0	0.0	0.0
RC ENV~2	Max	0.1	0.0	9.7	0.0	0.0	0.0
	Min	-0.1	0.0	8.2	0.0	0.0	0.0
490	SX (RS)	0.2	0.0	0.2	0.0	0.0	0.0
	SY (RS)	0.0	0.3	0.1	0.0	0.0	0.0
RC ENV~1	Max	0.2	0.3	13.2	0.0	0.0	0.0
	Min	-0.2	-0.3	8.2	0.0	0.0	0.0
RC ENV~2	Max	0.1	0.0	9.8	0.0	0.0	0.0
	Min	-0.1	0.0	8.4	0.0	0.0	0.0
491	SX (RS)	0.2	0.0	0.1	0.0	0.0	0.0
	SY (RS)	0.0	0.3	0.1	0.0	0.0	0.0
RC ENV~1	Max	0.2	0.3	12.8	0.0	0.0	0.0
	Min	-0.2	-0.3	7.9	0.0	0.0	0.0
RC ENV~2	Max	0.1	0.0	9.5	0.0	0.0	0.0
	Min	-0.1	0.0	8.0	0.0	0.0	0.0
492	SX (RS)	0.2	0.0	0.1	0.0	0.0	0.0
	SY (RS)	0.0	0.3	0.1	0.0	0.0	0.0
RC ENV~1	Max	0.2	0.3	12.8	0.0	0.0	0.0
	Min	-0.2	-0.3	7.9	0.0	0.0	0.0
RC ENV~2	Max	0.1	0.0	9.5	0.0	0.0	0.0
	Min	-0.1	0.0	8.0	0.0	0.0	0.0
493	SX (RS)	0.2	0.0	0.1	0.0	0.0	0.0
	SY (RS)	0.0	0.3	0.1	0.0	0.0	0.0
RC ENV~1	Max	0.2	0.3	12.8	0.0	0.0	0.0
	Min	-0.2	-0.3	7.9	0.0	0.0	0.0
RC ENV~2	Max	0.1	0.0	9.5	0.0	0.0	0.0
	Min	-0.1	0.0	8.0	0.0	0.0	0.0
494	SX (RS)	0.2	0.0	0.1	0.0	0.0	0.0
	SY (RS)	0.0	0.3	0.0	0.0	0.0	0.0
RC ENV~1	Max	0.2	0.3	12.9	0.0	0.0	0.0
	Min	-0.2	-0.3	8.0	0.0	0.0	0.0
RC ENV~2	Max	0.1	0.0	9.6	0.0	0.0	0.0
	Min	-0.1	0.0	8.1	0.0	0.0	0.0
495	SX (RS)	0.2	0.0	0.1	0.0	0.0	0.0
	SY (RS)	0.0	0.3	0.0	0.0	0.0	0.0
RC ENV~1	Max	0.2	0.3	13.0	0.0	0.0	0.0
	Min	-0.2	-0.3	8.0	0.0	0.0	0.0
RC ENV~2	Max	0.1	0.0	9.7	0.0	0.0	0.0
	Min	-0.1	0.0	8.2	0.0	0.0	0.0
496	SX (RS)	0.2	0.0	0.1	0.0	0.0	0.0
	SY (RS)	0.0	0.3	0.0	0.0	0.0	0.0
RC ENV~1	Max	0.2	0.3	13.2	0.0	0.0	0.0
	Min	-0.2	-0.3	8.1	0.0	0.0	0.0
RC ENV~2	Max	0.1	0.0	9.8	0.0	0.0	0.0

	Min	-0.1	0.0	8.3	0.0	0.0	0.0
497	SX (RS)	0.2	0.0	0.2	0.0	0.0	0.0
	SY (RS)	0.0	0.3	0.0	0.0	0.0	0.0
RC ENV~1	Max	0.2	0.3	13.3	0.0	0.0	0.0
	Min	-0.2	-0.3	8.2	0.0	0.0	0.0
RC ENV~2	Max	0.1	0.0	9.9	0.0	0.0	0.0
	Min	-0.1	0.0	8.4	0.0	0.0	0.0
498	SX (RS)	0.2	0.0	0.1	0.0	0.0	0.0
	SY (RS)	0.0	0.3	0.0	0.0	0.0	0.0
RC ENV~1	Max	0.2	0.3	12.9	0.0	0.0	0.0
	Min	-0.2	-0.3	7.9	0.0	0.0	0.0
RC ENV~2	Max	0.1	0.0	9.6	0.0	0.0	0.0
	Min	-0.1	0.0	8.0	0.0	0.0	0.0
499	SX (RS)	0.2	0.0	0.1	0.0	0.0	0.0
	SY (RS)	0.0	0.3	0.0	0.0	0.0	0.0
RC ENV~1	Max	0.2	0.3	12.9	0.0	0.0	0.0
	Min	-0.2	-0.3	7.9	0.0	0.0	0.0
RC ENV~2	Max	0.1	0.0	9.6	0.0	0.0	0.0
	Min	-0.1	0.0	8.0	0.0	0.0	0.0
500	SX (RS)	0.2	0.0	0.1	0.0	0.0	0.0
	SY (RS)	0.0	0.3	0.0	0.0	0.0	0.0
RC ENV~1	Max	0.2	0.3	12.9	0.0	0.0	0.0
	Min	-0.2	-0.3	7.9	0.0	0.0	0.0
RC ENV~2	Max	0.1	0.0	9.6	0.0	0.0	0.0
	Min	-0.1	0.0	8.0	0.0	0.0	0.0
501	SX (RS)	0.2	0.0	0.1	0.0	0.0	0.0
	SY (RS)	0.0	0.3	0.0	0.0	0.0	0.0
RC ENV~1	Max	0.2	0.3	13.0	0.0	0.0	0.0
	Min	-0.2	-0.3	8.0	0.0	0.0	0.0
RC ENV~2	Max	0.1	0.0	9.6	0.0	0.0	0.0
	Min	-0.1	0.0	8.1	0.0	0.0	0.0
502	SX (RS)	0.2	0.0	0.1	0.0	0.0	0.0
	SY (RS)	0.0	0.3	0.0	0.0	0.0	0.0
RC ENV~1	Max	0.2	0.3	13.1	0.0	0.0	0.0
	Min	-0.2	-0.3	8.1	0.0	0.0	0.0
RC ENV~2	Max	0.1	0.0	9.7	0.0	0.0	0.0
	Min	-0.1	0.0	8.2	0.0	0.0	0.0
503	SX (RS)	0.2	0.0	0.1	0.0	0.0	0.0
	SY (RS)	0.0	0.3	0.0	0.0	0.0	0.0
RC ENV~1	Max	0.2	0.3	13.3	0.0	0.0	0.0
	Min	-0.2	-0.3	8.2	0.0	0.0	0.0
RC ENV~2	Max	0.1	0.0	9.9	0.0	0.0	0.0
	Min	-0.1	0.0	8.3	0.0	0.0	0.0
504	SX (RS)	0.2	0.0	0.2	0.0	0.0	0.0
	SY (RS)	0.0	0.3	0.0	0.0	0.0	0.0
RC ENV~1	Max	0.2	0.3	13.5	0.0	0.0	0.0
	Min	-0.2	-0.3	8.3	0.0	0.0	0.0
RC ENV~2	Max	0.1	0.0	10.0	0.0	0.0	0.0
	Min	-0.1	0.0	8.4	0.0	0.0	0.0
505	SX (RS)	0.2	0.0	0.2	0.0	0.0	0.0
	SY (RS)	0.0	0.3	0.0	0.0	0.0	0.0
RC ENV~1	Max	0.2	0.3	13.1	0.0	0.0	0.0
	Min	-0.2	-0.3	8.1	0.0	0.0	0.0

	RC ENV~2	Max	0.1	0.0	9.7	0.0	0.0	0.0
		Min	-0.1	0.0	8.3	0.0	0.0	0.0
506	SX (RS)		0.2	0.0	0.1	0.0	0.0	0.0
	SY (RS)		0.0	0.3	0.0	0.0	0.0	0.0
	RC ENV~1	Max	0.2	0.3	12.9	0.0	0.0	0.0
		Min	-0.2	-0.3	8.1	0.0	0.0	0.0
	RC ENV~2	Max	0.1	0.0	9.6	0.0	0.0	0.0
		Min	-0.1	0.0	8.2	0.0	0.0	0.0
507	SX (RS)		0.2	0.0	0.1	0.0	0.0	0.0
	SY (RS)		0.0	0.3	0.0	0.0	0.0	0.0
	RC ENV~1	Max	0.2	0.3	12.8	0.0	0.0	0.0
		Min	-0.2	-0.3	7.9	0.0	0.0	0.0
	RC ENV~2	Max	0.1	0.0	9.5	0.0	0.0	0.0
		Min	-0.1	0.0	8.0	0.0	0.0	0.0
508	SX (RS)		0.2	0.0	0.1	0.0	0.0	0.0
	SY (RS)		0.0	0.3	0.0	0.0	0.0	0.0
	RC ENV~1	Max	0.2	0.3	12.7	0.0	0.0	0.0
		Min	-0.2	-0.3	7.9	0.0	0.0	0.0
	RC ENV~2	Max	0.1	0.0	9.5	0.0	0.0	0.0
		Min	-0.1	0.0	8.0	0.0	0.0	0.0
509	SX (RS)		0.2	0.0	0.1	0.0	0.0	0.0
	SY (RS)		0.0	0.3	0.0	0.0	0.0	0.0
	RC ENV~1	Max	0.2	0.3	12.7	0.0	0.0	0.0
		Min	-0.2	-0.3	7.8	0.0	0.0	0.0
	RC ENV~2	Max	0.1	0.0	9.5	0.0	0.0	0.0
		Min	-0.1	0.0	7.9	0.0	0.0	0.0
510	SX (RS)		0.2	0.0	0.1	0.0	0.0	0.0
	SY (RS)		0.0	0.3	0.0	0.0	0.0	0.0
	RC ENV~1	Max	0.2	0.3	12.8	0.0	0.0	0.0
		Min	-0.2	-0.3	7.8	0.0	0.0	0.0
	RC ENV~2	Max	0.1	0.0	9.5	0.0	0.0	0.0
		Min	-0.1	0.0	7.9	0.0	0.0	0.0
511	SX (RS)		0.2	0.0	0.1	0.0	0.0	0.0
	SY (RS)		0.0	0.3	0.0	0.0	0.0	0.0
	RC ENV~1	Max	0.2	0.3	12.8	0.0	0.0	0.0
		Min	-0.2	-0.3	7.9	0.0	0.0	0.0
	RC ENV~2	Max	0.1	0.0	9.5	0.0	0.0	0.0
		Min	-0.1	0.0	7.9	0.0	0.0	0.0
512	SX (RS)		0.2	0.0	0.0	0.0	0.0	0.0
	SY (RS)		0.0	0.3	0.0	0.0	0.0	0.0
	RC ENV~1	Max	0.2	0.3	12.9	0.0	0.0	0.0
		Min	-0.2	-0.3	7.9	0.0	0.0	0.0
	RC ENV~2	Max	0.1	0.0	9.6	0.0	0.0	0.0
		Min	-0.1	0.0	8.0	0.0	0.0	0.0
513	SX (RS)		0.2	0.0	0.2	0.0	0.0	0.0
	SY (RS)		0.0	0.3	0.0	0.0	0.0	0.0
	RC ENV~1	Max	0.2	0.3	13.0	0.0	0.0	0.0
		Min	-0.2	-0.3	8.1	0.0	0.0	0.0
	RC ENV~2	Max	0.1	0.0	9.7	0.0	0.0	0.0
		Min	-0.1	0.0	8.2	0.0	0.0	0.0
514	SX (RS)		0.2	0.0	0.1	0.0	0.0	0.0
	SY (RS)		0.0	0.3	0.0	0.0	0.0	0.0

	RC ENV~1	Max	0.2	0.3	12.9	0.0	0.0	0.0
		Min	-0.2	-0.3	8.0	0.0	0.0	0.0
	RC ENV~2	Max	0.1	0.0	9.6	0.0	0.0	0.0
		Min	-0.1	0.0	8.1	0.0	0.0	0.0
515		SX (RS)	0.2	0.0	0.1	0.0	0.0	0.0
		SY (RS)	0.0	0.3	0.0	0.0	0.0	0.0
	RC ENV~1	Max	0.2	0.3	12.8	0.0	0.0	0.0
		Min	-0.2	-0.3	7.9	0.0	0.0	0.0
	RC ENV~2	Max	0.1	0.0	9.5	0.0	0.0	0.0
		Min	-0.1	0.0	8.0	0.0	0.0	0.0
516		SX (RS)	0.2	0.0	0.1	0.0	0.0	0.0
		SY (RS)	0.0	0.3	0.0	0.0	0.0	0.0
	RC ENV~1	Max	0.2	0.3	12.7	0.0	0.0	0.0
		Min	-0.2	-0.3	7.8	0.0	0.0	0.0
	RC ENV~2	Max	0.1	0.0	9.5	0.0	0.0	0.0
		Min	-0.1	0.0	7.9	0.0	0.0	0.0
517		SX (RS)	0.2	0.0	0.1	0.0	0.0	0.0
		SY (RS)	0.0	0.3	0.0	0.0	0.0	0.0
	RC ENV~1	Max	0.2	0.3	12.7	0.0	0.0	0.0
		Min	-0.2	-0.3	7.8	0.0	0.0	0.0
	RC ENV~2	Max	0.1	0.0	9.5	0.0	0.0	0.0
		Min	-0.1	0.0	7.9	0.0	0.0	0.0
518		SX (RS)	0.2	0.0	0.1	0.0	0.0	0.0
		SY (RS)	0.0	0.3	0.0	0.0	0.0	0.0
	RC ENV~1	Max	0.2	0.3	12.8	0.0	0.0	0.0
		Min	-0.2	-0.3	7.8	0.0	0.0	0.0
	RC ENV~2	Max	0.1	0.0	9.5	0.0	0.0	0.0
		Min	-0.1	0.0	7.9	0.0	0.0	0.0
519		SX (RS)	0.2	0.0	0.1	0.0	0.0	0.0
		SY (RS)	0.0	0.3	0.0	0.0	0.0	0.0
	RC ENV~1	Max	0.2	0.3	12.8	0.0	0.0	0.0
		Min	-0.2	-0.3	7.9	0.0	0.0	0.0
	RC ENV~2	Max	0.1	0.0	9.5	0.0	0.0	0.0
		Min	-0.1	0.0	7.9	0.0	0.0	0.0
520		SX (RS)	0.2	0.0	0.0	0.0	0.0	0.0
		SY (RS)	0.0	0.3	0.0	0.0	0.0	0.0
	RC ENV~1	Max	0.2	0.3	12.9	0.0	0.0	0.0
		Min	-0.2	-0.3	7.9	0.0	0.0	0.0
	RC ENV~2	Max	0.1	0.0	9.6	0.0	0.0	0.0
		Min	-0.1	0.0	7.9	0.0	0.0	0.0
521		SX (RS)	0.2	0.0	0.2	0.0	0.0	0.0
		SY (RS)	0.0	0.3	0.0	0.0	0.0	0.0
	RC ENV~1	Max	0.2	0.3	12.8	0.0	0.0	0.0
		Min	-0.2	-0.3	8.0	0.0	0.0	0.0
	RC ENV~2	Max	0.1	0.0	9.6	0.0	0.0	0.0
		Min	-0.1	-0.0	8.2	0.0	0.0	0.0
522		SX (RS)	0.2	0.0	0.1	0.0	0.0	0.0
		SY (RS)	0.0	0.3	0.0	0.0	0.0	0.0
	RC ENV~1	Max	0.2	0.3	12.8	0.0	0.0	0.0
		Min	-0.2	-0.3	7.9	0.0	0.0	0.0
	RC ENV~2	Max	0.1	0.0	9.5	0.0	0.0	0.0
		Min	-0.1	-0.0	8.1	0.0	0.0	0.0
523		SX (RS)	0.2	0.0	0.1	0.0	0.0	0.0

	SY (RS)	0.0	0.3	0.0	0.0	0.0	0.0
RC ENV~1	Max	0.2	0.3	12.7	0.0	0.0	0.0
	Min	-0.2	-0.3	7.9	0.0	0.0	0.0
RC ENV~2	Max	0.1	0.0	9.5	0.0	0.0	0.0
	Min	-0.1	0.0	8.0	0.0	0.0	0.0
524	SX (RS)	0.2	0.0	0.1	0.0	0.0	0.0
	SY (RS)	0.0	0.3	0.0	0.0	0.0	0.0
RC ENV~1	Max	0.2	0.3	12.7	0.0	0.0	0.0
	Min	-0.2	-0.3	7.8	0.0	0.0	0.0
RC ENV~2	Max	0.1	0.0	9.4	0.0	0.0	0.0
	Min	-0.1	0.0	7.9	0.0	0.0	0.0
525	SX (RS)	0.2	0.0	0.1	0.0	0.0	0.0
	SY (RS)	0.0	0.3	0.0	0.0	0.0	0.0
RC ENV~1	Max	0.2	0.3	12.7	0.0	0.0	0.0
	Min	-0.2	-0.3	7.7	0.0	0.0	0.0
RC ENV~2	Max	0.1	0.0	9.4	0.0	0.0	0.0
	Min	-0.1	0.0	7.8	0.0	0.0	0.0
526	SX (RS)	0.2	0.0	0.1	0.0	0.0	0.0
	SY (RS)	0.0	0.3	0.0	0.0	0.0	0.0
RC ENV~1	Max	0.2	0.3	12.7	0.0	0.0	0.0
	Min	-0.2	-0.3	7.8	0.0	0.0	0.0
RC ENV~2	Max	0.1	0.0	9.5	0.0	0.0	0.0
	Min	-0.1	0.0	7.8	0.0	0.0	0.0
527	SX (RS)	0.2	0.0	0.0	0.0	0.0	0.0
	SY (RS)	0.0	0.3	0.0	0.0	0.0	0.0
RC ENV~1	Max	0.2	0.3	12.8	0.0	0.0	0.0
	Min	-0.2	-0.3	7.8	0.0	0.0	0.0
RC ENV~2	Max	0.1	0.0	9.5	0.0	0.0	0.0
	Min	-0.1	0.0	7.8	0.0	0.0	0.0
528	SX (RS)	0.2	0.0	0.0	0.0	0.0	0.0
	SY (RS)	0.0	0.3	0.0	0.0	0.0	0.0
RC ENV~1	Max	0.2	0.3	12.9	0.0	0.0	0.0
	Min	-0.2	-0.3	7.9	0.0	0.0	0.0
RC ENV~2	Max	0.1	0.0	9.6	0.0	0.0	0.0
	Min	-0.1	0.0	7.9	0.0	0.0	0.0
529	SX (RS)	0.2	0.0	0.2	0.0	0.0	0.0
	SY (RS)	0.0	0.3	0.0	0.0	0.0	0.0
RC ENV~1	Max	0.2	0.3	12.7	0.0	0.0	0.0
	Min	-0.2	-0.3	8.0	0.0	0.0	0.0
RC ENV~2	Max	0.1	-0.0	9.5	0.0	0.0	0.0
	Min	-0.1	-0.0	8.1	0.0	0.0	0.0
530	SX (RS)	0.2	0.0	0.1	0.0	0.0	0.0
	SY (RS)	0.0	0.3	0.0	0.0	0.0	0.0
RC ENV~1	Max	0.2	0.3	12.7	0.0	0.0	0.0
	Min	-0.2	-0.3	7.9	0.0	0.0	0.0
RC ENV~2	Max	0.1	-0.0	9.5	0.0	0.0	0.0
	Min	-0.1	-0.0	8.0	0.0	0.0	0.0
531	SX (RS)	0.2	0.0	0.1	0.0	0.0	0.0
	SY (RS)	0.0	0.3	0.0	0.0	0.0	0.0
RC ENV~1	Max	0.2	0.3	12.6	0.0	0.0	0.0
	Min	-0.2	-0.3	7.8	0.0	0.0	0.0
RC ENV~2	Max	0.1	-0.0	9.4	0.0	0.0	0.0
	Min	-0.1	-0.0	7.9	0.0	0.0	0.0

532	SX (RS)	0.2	0.0	0.1	0.0	0.0	0.0
	SY (RS)	0.0	0.3	0.0	0.0	0.0	0.0
RC ENV~1	Max	0.2	0.3	12.6	0.0	0.0	0.0
	Min	-0.2	-0.3	7.7	0.0	0.0	0.0
RC ENV~2	Max	0.1	-0.0	9.4	0.0	0.0	0.0
	Min	-0.1	-0.0	7.8	0.0	0.0	0.0
533	SX (RS)	0.2	0.0	0.1	0.0	0.0	0.0
	SY (RS)	0.0	0.3	0.0	0.0	0.0	0.0
RC ENV~1	Max	0.2	0.3	12.7	0.0	0.0	0.0
	Min	-0.2	-0.3	7.7	0.0	0.0	0.0
RC ENV~2	Max	0.1	-0.0	9.4	0.0	0.0	0.0
	Min	-0.1	-0.0	7.8	0.0	0.0	0.0
534	SX (RS)	0.2	0.0	0.1	0.0	0.0	0.0
	SY (RS)	0.0	0.3	0.0	0.0	0.0	0.0
RC ENV~1	Max	0.2	0.3	12.8	0.0	0.0	0.0
	Min	-0.2	-0.3	7.7	0.0	0.0	0.0
RC ENV~2	Max	0.1	-0.0	9.5	0.0	0.0	0.0
	Min	-0.1	-0.0	7.8	0.0	0.0	0.0
535	SX (RS)	0.2	0.0	0.0	0.0	0.0	0.0
	SY (RS)	0.0	0.3	0.0	0.0	0.0	0.0
RC ENV~1	Max	0.2	0.3	12.9	0.0	0.0	0.0
	Min	-0.2	-0.3	7.8	0.0	0.0	0.0
RC ENV~2	Max	0.1	-0.0	9.5	0.0	0.0	0.0
	Min	-0.1	-0.0	7.8	0.0	0.0	0.0
536	SX (RS)	0.2	0.0	0.0	0.0	0.0	0.0
	SY (RS)	0.0	0.3	0.0	0.0	0.0	0.0
RC ENV~1	Max	0.2	0.3	13.0	0.0	0.0	0.0
	Min	-0.2	-0.3	7.8	0.0	0.0	0.0
RC ENV~2	Max	0.1	-0.0	9.6	0.0	0.0	0.0
	Min	-0.1	-0.0	7.8	0.0	0.0	0.0
537	SX (RS)	0.2	0.0	0.2	0.0	0.0	0.0
	SY (RS)	0.0	0.3	0.0	0.0	0.0	0.0
RC ENV~1	Max	0.2	0.3	12.7	0.0	0.0	0.0
	Min	-0.2	-0.3	7.9	0.0	0.0	0.0
RC ENV~2	Max	0.1	-0.0	9.5	0.0	0.0	0.0
	Min	-0.1	-0.0	8.0	0.0	0.0	0.0
538	SX (RS)	0.2	0.0	0.1	0.0	0.0	0.0
	SY (RS)	0.0	0.3	0.0	0.0	0.0	0.0
RC ENV~1	Max	0.2	0.3	12.6	0.0	0.0	0.0
	Min	-0.2	-0.3	7.8	0.0	0.0	0.0
RC ENV~2	Max	0.1	-0.0	9.4	0.0	0.0	0.0
	Min	-0.1	-0.0	7.9	0.0	0.0	0.0
539	SX (RS)	0.2	0.0	0.1	0.0	0.0	0.0
	SY (RS)	0.0	0.3	0.0	0.0	0.0	0.0
RC ENV~1	Max	0.2	0.3	12.6	0.0	0.0	0.0
	Min	-0.2	-0.3	7.7	0.0	0.0	0.0
RC ENV~2	Max	0.1	-0.0	9.4	0.0	0.0	0.0
	Min	-0.1	-0.0	7.8	0.0	0.0	0.0
540	SX (RS)	0.2	0.0	0.1	0.0	0.0	0.0
	SY (RS)	0.0	0.3	0.0	0.0	0.0	0.0
RC ENV~1	Max	0.2	0.3	12.6	0.0	0.0	0.0
	Min	-0.2	-0.3	7.7	0.0	0.0	0.0

	RC ENV~2	Max	0.1	-0.0	9.3	0.0	0.0	0.0
		Min	-0.1	-0.0	7.8	0.0	0.0	0.0
541	SX (RS)		0.2	0.0	0.1	0.0	0.0	0.0
	SY (RS)		0.0	0.3	0.0	0.0	0.0	0.0
	RC ENV~1	Max	0.2	0.3	12.6	0.0	0.0	0.0
		Min	-0.2	-0.3	7.6	0.0	0.0	0.0
	RC ENV~2	Max	0.1	-0.0	9.4	0.0	0.0	0.0
		Min	-0.1	-0.0	7.7	0.0	0.0	0.0
542	SX (RS)		0.2	0.0	0.1	0.0	0.0	0.0
	SY (RS)		0.0	0.3	0.0	0.0	0.0	0.0
	RC ENV~1	Max	0.2	0.3	12.8	0.0	0.0	0.0
		Min	-0.2	-0.3	7.7	0.0	0.0	0.0
	RC ENV~2	Max	0.1	-0.0	9.5	0.0	0.0	0.0
		Min	-0.1	-0.0	7.7	0.0	0.0	0.0
543	SX (RS)		0.2	0.0	0.1	0.0	0.0	0.0
	SY (RS)		0.0	0.3	0.0	0.0	0.0	0.0
	RC ENV~1	Max	0.2	0.3	12.9	0.0	0.0	0.0
		Min	-0.2	-0.3	7.7	0.0	0.0	0.0
	RC ENV~2	Max	0.1	-0.0	9.6	0.0	0.0	0.0
		Min	-0.1	-0.0	7.8	0.0	0.0	0.0
544	SX (RS)		0.2	0.0	0.0	0.0	0.0	0.0
	SY (RS)		0.0	0.3	0.0	0.0	0.0	0.0
	RC ENV~1	Max	0.2	0.3	13.1	0.0	0.0	0.0
		Min	-0.2	-0.3	7.8	0.0	0.0	0.0
	RC ENV~2	Max	0.1	-0.0	9.7	0.0	0.0	0.0
		Min	-0.1	-0.0	7.8	0.0	0.0	0.0
545	SX (RS)		0.2	0.0	0.2	0.0	0.0	0.0
	SY (RS)		0.0	0.3	0.0	0.0	0.0	0.0
	RC ENV~1	Max	0.2	0.3	12.6	0.0	0.0	0.0
		Min	-0.2	-0.3	7.8	0.0	0.0	0.0
	RC ENV~2	Max	0.1	-0.0	9.4	0.0	0.0	0.0
		Min	-0.1	-0.0	8.0	0.0	0.0	0.0
546	SX (RS)		0.2	0.0	0.1	0.0	0.0	0.0
	SY (RS)		0.0	0.3	0.0	0.0	0.0	0.0
	RC ENV~1	Max	0.2	0.3	12.5	0.0	0.0	0.0
		Min	-0.2	-0.3	7.8	0.0	0.0	0.0
	RC ENV~2	Max	0.1	-0.0	9.3	0.0	0.0	0.0
		Min	-0.1	-0.0	7.9	0.0	0.0	0.0
547	SX (RS)		0.2	0.0	0.1	0.0	0.0	0.0
	SY (RS)		0.0	0.3	0.0	0.0	0.0	0.0
	RC ENV~1	Max	0.2	0.3	12.5	0.0	0.0	0.0
		Min	-0.2	-0.3	7.7	0.0	0.0	0.0
	RC ENV~2	Max	0.1	-0.0	9.3	0.0	0.0	0.0
		Min	-0.1	-0.0	7.8	0.0	0.0	0.0
548	SX (RS)		0.2	0.0	0.1	0.0	0.0	0.0
	SY (RS)		0.0	0.3	0.0	0.0	0.0	0.0
	RC ENV~1	Max	0.2	0.3	12.5	0.0	0.0	0.0
		Min	-0.2	-0.3	7.6	0.0	0.0	0.0
	RC ENV~2	Max	0.1	-0.0	9.3	0.0	0.0	0.0
		Min	-0.1	-0.0	7.7	0.0	0.0	0.0
549	SX (RS)		0.2	0.0	0.1	0.0	0.0	0.0
	SY (RS)		0.0	0.3	0.0	0.0	0.0	0.0
	RC ENV~1	Max	0.2	0.3	12.6	0.0	0.0	0.0

	Min	-0.2	-0.3	7.6	0.0	0.0	0.0
RC ENV~2	Max	0.1	-0.0	9.4	0.0	0.0	0.0
	Min	-0.1	-0.0	7.7	0.0	0.0	0.0
550	SX (RS)	0.2	0.0	0.1	0.0	0.0	0.0
	SY (RS)	0.0	0.3	0.0	0.0	0.0	0.0
RC ENV~1	Max	0.2	0.3	12.8	0.0	0.0	0.0
	Min	-0.2	-0.3	7.6	0.0	0.0	0.0
RC ENV~2	Max	0.1	-0.0	9.5	0.0	0.0	0.0
	Min	-0.1	-0.0	7.7	0.0	0.0	0.0
551	SX (RS)	0.2	0.0	0.1	0.0	0.0	0.0
	SY (RS)	0.0	0.3	0.0	0.0	0.0	0.0
RC ENV~1	Max	0.2	0.3	13.0	0.0	0.0	0.0
	Min	-0.2	-0.3	7.7	0.0	0.0	0.0
RC ENV~2	Max	0.1	-0.0	9.6	0.0	0.0	0.0
	Min	-0.1	-0.0	7.7	0.0	0.0	0.0
552	SX (RS)	0.2	0.0	0.0	0.0	0.0	0.0
	SY (RS)	0.0	0.3	0.0	0.0	0.0	0.0
RC ENV~1	Max	0.2	0.3	13.2	0.0	0.0	0.0
	Min	-0.2	-0.3	7.8	0.0	0.0	0.0
RC ENV~2	Max	0.1	-0.0	9.8	0.0	0.0	0.0
	Min	-0.1	-0.0	7.8	0.0	0.0	0.0
553	SX (RS)	0.2	0.0	0.2	0.0	0.0	0.0
	SY (RS)	0.0	0.3	0.0	0.0	0.0	0.0
RC ENV~1	Max	0.2	0.3	12.5	0.0	0.0	0.0
	Min	-0.2	-0.3	7.8	0.0	0.0	0.0
RC ENV~2	Max	0.1	-0.0	9.3	0.0	0.0	0.0
	Min	-0.1	-0.0	7.9	0.0	0.0	0.0
554	SX (RS)	0.2	0.0	0.1	0.0	0.0	0.0
	SY (RS)	0.0	0.3	0.0	0.0	0.0	0.0
RC ENV~1	Max	0.2	0.3	12.4	0.0	0.0	0.0
	Min	-0.2	-0.3	7.7	0.0	0.0	0.0
RC ENV~2	Max	0.1	-0.0	9.3	0.0	0.0	0.0
	Min	-0.1	-0.0	7.8	0.0	0.0	0.0
555	SX (RS)	0.2	0.0	0.1	0.0	0.0	0.0
	SY (RS)	0.0	0.3	0.0	0.0	0.0	0.0
RC ENV~1	Max	0.2	0.3	12.4	0.0	0.0	0.0
	Min	-0.2	-0.3	7.6	0.0	0.0	0.0
RC ENV~2	Max	0.1	-0.0	9.2	0.0	0.0	0.0
	Min	-0.1	-0.0	7.7	0.0	0.0	0.0
556	SX (RS)	0.2	0.0	0.1	0.0	0.0	0.0
	SY (RS)	0.0	0.3	0.0	0.0	0.0	0.0
RC ENV~1	Max	0.2	0.3	12.5	0.0	0.0	0.0
	Min	-0.2	-0.3	7.5	0.0	0.0	0.0
RC ENV~2	Max	0.1	-0.0	9.2	0.0	0.0	0.0
	Min	-0.1	-0.0	7.6	0.0	0.0	0.0
557	SX (RS)	0.2	0.0	0.1	0.0	0.0	0.0
	SY (RS)	0.0	0.3	0.0	0.0	0.0	0.0
RC ENV~1	Max	0.2	0.3	12.6	0.0	0.0	0.0
	Min	-0.2	-0.3	7.5	0.0	0.0	0.0
RC ENV~2	Max	0.1	-0.0	9.3	0.0	0.0	0.0
	Min	-0.1	-0.0	7.6	0.0	0.0	0.0
558	SX (RS)	0.2	0.0	0.1	0.0	0.0	0.0
	SY (RS)	0.0	0.3	0.0	0.0	0.0	0.0

	RC ENV~1	Max	0.2	0.3	12.8	0.0	0.0	0.0
		Min	-0.2	-0.3	7.5	0.0	0.0	0.0
	RC ENV~2	Max	0.1	-0.0	9.5	0.0	0.0	0.0
		Min	-0.1	-0.0	7.6	0.0	0.0	0.0
559	SX (RS)		0.2	0.0	0.1	0.0	0.0	0.0
	SY (RS)		0.0	0.3	0.0	0.0	0.0	0.0
	RC ENV~1	Max	0.2	0.3	13.0	0.0	0.0	0.0
		Min	-0.2	-0.3	7.6	0.0	0.0	0.0
	RC ENV~2	Max	0.1	-0.0	9.6	0.0	0.0	0.0
		Min	-0.1	-0.0	7.7	0.0	0.0	0.0
560	SX (RS)		0.2	0.0	0.1	0.0	0.0	0.0
	SY (RS)		0.0	0.3	0.0	0.0	0.0	0.0
	RC ENV~1	Max	0.2	0.3	12.9	0.0	0.0	0.0
		Min	-0.2	-0.3	7.9	0.0	0.0	0.0
	RC ENV~2	Max	0.1	0.0	9.6	0.0	0.0	0.0
		Min	-0.1	0.0	8.0	0.0	0.0	0.0
561	SX (RS)		0.2	0.0	0.1	0.0	0.0	0.0
	SY (RS)		0.0	0.3	0.0	0.0	0.0	0.0
	RC ENV~1	Max	0.2	0.3	12.9	0.0	0.0	0.0
		Min	-0.2	-0.3	7.9	0.0	0.0	0.0
	RC ENV~2	Max	0.1	0.0	9.6	0.0	0.0	0.0
		Min	-0.1	0.0	8.0	0.0	0.0	0.0
562	SX (RS)		0.2	0.0	0.1	0.0	0.0	0.0
	SY (RS)		0.0	0.3	0.0	0.0	0.0	0.0
	RC ENV~1	Max	0.2	0.3	13.0	0.0	0.0	0.0
		Min	-0.2	-0.3	7.9	0.0	0.0	0.0
	RC ENV~2	Max	0.1	0.0	9.6	0.0	0.0	0.0
		Min	-0.1	0.0	8.0	0.0	0.0	0.0
563	SX (RS)		0.2	0.0	0.1	0.0	0.0	0.0
	SY (RS)		0.0	0.3	0.0	0.0	0.0	0.0
	RC ENV~1	Max	0.2	0.3	13.1	0.0	0.0	0.0
		Min	-0.2	-0.3	8.0	0.0	0.0	0.0
	RC ENV~2	Max	0.1	0.0	9.7	0.0	0.0	0.0
		Min	-0.1	0.0	8.1	0.0	0.0	0.0
564	SX (RS)		0.2	0.0	0.1	0.0	0.0	0.0
	SY (RS)		0.0	0.3	0.0	0.0	0.0	0.0
	RC ENV~1	Max	0.2	0.3	13.2	0.0	0.0	0.0
		Min	-0.2	-0.3	8.1	0.0	0.0	0.0
	RC ENV~2	Max	0.1	0.0	9.8	0.0	0.0	0.0
		Min	-0.1	0.0	8.2	0.0	0.0	0.0
565	SX (RS)		0.2	0.0	0.1	0.0	0.0	0.0
	SY (RS)		0.0	0.3	0.0	0.0	0.0	0.0
	RC ENV~1	Max	0.2	0.3	13.4	0.0	0.0	0.0
		Min	-0.2	-0.3	8.2	0.0	0.0	0.0
	RC ENV~2	Max	0.1	0.0	9.9	0.0	0.0	0.0
		Min	-0.1	0.0	8.3	0.0	0.0	0.0
566	SX (RS)		0.2	0.0	0.2	0.0	0.0	0.0
	SY (RS)		0.0	0.3	0.0	0.0	0.0	0.0
	RC ENV~1	Max	0.2	0.3	13.6	0.0	0.0	0.0
		Min	-0.2	-0.3	8.3	0.0	0.0	0.0
	RC ENV~2	Max	0.1	0.0	10.1	0.0	0.0	0.0
		Min	-0.1	0.0	8.4	0.0	0.0	0.0

567	SX (RS)	0.2	0.0	0.1	0.0	0.0	0.0
	SY (RS)	0.0	0.3	0.0	0.0	0.0	0.0
RC ENV~1	Max	0.2	0.3	13.0	0.0	0.0	0.0
	Min	-0.2	-0.3	7.9	0.0	0.0	0.0
RC ENV~2	Max	0.1	0.0	9.6	0.0	0.0	0.0
	Min	-0.1	0.0	7.9	0.0	0.0	0.0
568	SX (RS)	0.2	0.0	0.1	0.0	0.0	0.0
	SY (RS)	0.0	0.3	0.0	0.0	0.0	0.0
RC ENV~1	Max	0.2	0.3	13.0	0.0	0.0	0.0
	Min	-0.2	-0.3	7.9	0.0	0.0	0.0
RC ENV~2	Max	0.1	0.0	9.6	0.0	0.0	0.0
	Min	-0.1	0.0	8.0	0.0	0.0	0.0
569	SX (RS)	0.2	0.0	0.1	0.0	0.0	0.0
	SY (RS)	0.0	0.3	0.0	0.0	0.0	0.0
RC ENV~1	Max	0.2	0.3	13.1	0.0	0.0	0.0
	Min	-0.2	-0.3	7.9	0.0	0.0	0.0
RC ENV~2	Max	0.1	0.0	9.7	0.0	0.0	0.0
	Min	-0.1	0.0	8.0	0.0	0.0	0.0
570	SX (RS)	0.2	0.0	0.1	0.0	0.0	0.0
	SY (RS)	0.0	0.3	0.0	0.0	0.0	0.0
RC ENV~1	Max	0.2	0.3	13.2	0.0	0.0	0.0
	Min	-0.2	-0.3	8.0	0.0	0.0	0.0
RC ENV~2	Max	0.1	0.0	9.8	0.0	0.0	0.0
	Min	-0.1	0.0	8.1	0.0	0.0	0.0
571	SX (RS)	0.2	0.0	0.1	0.0	0.0	0.0
	SY (RS)	0.0	0.3	0.0	0.0	0.0	0.0
RC ENV~1	Max	0.2	0.3	13.3	0.0	0.0	0.0
	Min	-0.2	-0.3	8.1	0.0	0.0	0.0
RC ENV~2	Max	0.1	0.0	9.9	0.0	0.0	0.0
	Min	-0.1	0.0	8.2	0.0	0.0	0.0
572	SX (RS)	0.2	0.0	0.1	0.0	0.0	0.0
	SY (RS)	0.0	0.3	0.0	0.0	0.0	0.0
RC ENV~1	Max	0.2	0.3	13.5	0.0	0.0	0.0
	Min	-0.2	-0.3	8.2	0.0	0.0	0.0
RC ENV~2	Max	0.1	0.0	10.0	0.0	0.0	0.0
	Min	-0.1	0.0	8.3	0.0	0.0	0.0
573	SX (RS)	0.2	0.0	0.2	0.0	0.0	0.0
	SY (RS)	0.0	0.3	0.0	0.0	0.0	0.0
RC ENV~1	Max	0.2	0.3	13.6	0.0	0.0	0.0
	Min	-0.2	-0.3	8.3	0.0	0.0	0.0
RC ENV~2	Max	0.1	0.0	10.1	0.0	0.0	0.0
	Min	-0.1	0.0	8.4	0.0	0.0	0.0
574	SX (RS)	0.2	0.0	0.0	0.0	0.0	0.0
	SY (RS)	0.0	0.3	0.0	0.0	0.0	0.0
RC ENV~1	Max	0.2	0.3	13.0	0.0	0.0	0.0
	Min	-0.2	-0.3	7.9	0.0	0.0	0.0
RC ENV~2	Max	0.1	0.0	9.6	0.0	0.0	0.0
	Min	-0.1	0.0	7.9	0.0	0.0	0.0
575	SX (RS)	0.2	0.0	0.1	0.0	0.0	0.0
	SY (RS)	0.0	0.3	0.0	0.0	0.0	0.0
RC ENV~1	Max	0.2	0.3	13.1	0.0	0.0	0.0
	Min	-0.2	-0.3	7.9	0.0	0.0	0.0
RC ENV~2	Max	0.1	0.0	9.7	0.0	0.0	0.0

	Min	-0.1	0.0	7.9	0.0	0.0	0.0
576	SX (RS)	0.2	0.0	0.1	0.0	0.0	0.0
	SY (RS)	0.0	0.3	0.0	0.0	0.0	0.0
RC ENV~1	Max	0.2	0.3	13.2	0.0	0.0	0.0
	Min	-0.2	-0.3	7.9	0.0	0.0	0.0
RC ENV~2	Max	0.1	0.0	9.8	0.0	0.0	0.0
	Min	-0.1	0.0	8.0	0.0	0.0	0.0
577	SX (RS)	0.2	0.0	0.1	0.0	0.0	0.0
	SY (RS)	0.0	0.3	0.0	0.0	0.0	0.0
RC ENV~1	Max	0.2	0.3	13.3	0.0	0.0	0.0
	Min	-0.2	-0.3	8.0	0.0	0.0	0.0
RC ENV~2	Max	0.1	0.0	9.8	0.0	0.0	0.0
	Min	-0.1	0.0	8.1	0.0	0.0	0.0
578	SX (RS)	0.2	0.0	0.1	0.0	0.0	0.0
	SY (RS)	0.0	0.3	0.0	0.0	0.0	0.0
RC ENV~1	Max	0.2	0.3	13.4	0.0	0.0	0.0
	Min	-0.2	-0.3	8.1	0.0	0.0	0.0
RC ENV~2	Max	0.1	0.0	10.0	0.0	0.0	0.0
	Min	-0.1	0.0	8.2	0.0	0.0	0.0
579	SX (RS)	0.2	0.0	0.1	0.0	0.0	0.0
	SY (RS)	0.0	0.3	0.0	0.0	0.0	0.0
RC ENV~1	Max	0.2	0.3	13.6	0.0	0.0	0.0
	Min	-0.2	-0.3	8.2	0.0	0.0	0.0
RC ENV~2	Max	0.1	0.0	10.1	0.0	0.0	0.0
	Min	-0.1	0.0	8.3	0.0	0.0	0.0
580	SX (RS)	0.2	0.0	0.2	0.0	0.0	0.0
	SY (RS)	0.0	0.3	0.0	0.0	0.0	0.0
RC ENV~1	Max	0.2	0.3	13.8	0.0	0.0	0.0
	Min	-0.2	-0.3	8.3	0.0	0.0	0.0
RC ENV~2	Max	0.1	0.0	10.2	0.0	0.0	0.0
	Min	-0.1	0.0	8.4	0.0	0.0	0.0
581	SX (RS)	0.2	0.0	0.0	0.0	0.0	0.0
	SY (RS)	0.0	0.3	0.0	0.0	0.0	0.0
RC ENV~1	Max	0.2	0.3	13.1	0.0	0.0	0.0
	Min	-0.2	-0.3	7.8	0.0	0.0	0.0
RC ENV~2	Max	0.1	-0.0	9.7	0.0	0.0	0.0
	Min	-0.1	-0.0	7.9	0.0	0.0	0.0
582	SX (RS)	0.2	0.0	0.1	0.0	0.0	0.0
	SY (RS)	0.0	0.3	0.0	0.0	0.0	0.0
RC ENV~1	Max	0.2	0.3	13.2	0.0	0.0	0.0
	Min	-0.2	-0.3	7.8	0.0	0.0	0.0
RC ENV~2	Max	0.1	-0.0	9.8	0.0	0.0	0.0
	Min	-0.1	-0.0	7.9	0.0	0.0	0.0
583	SX (RS)	0.2	0.0	0.1	0.0	0.0	0.0
	SY (RS)	0.0	0.3	0.0	0.0	0.0	0.0
RC ENV~1	Max	0.2	0.3	13.3	0.0	0.0	0.0
	Min	-0.2	-0.3	7.9	0.0	0.0	0.0
RC ENV~2	Max	0.1	-0.0	9.8	0.0	0.0	0.0
	Min	-0.1	-0.0	8.0	0.0	0.0	0.0
584	SX (RS)	0.2	0.0	0.1	0.0	0.0	0.0
	SY (RS)	0.0	0.3	0.0	0.0	0.0	0.0
RC ENV~1	Max	0.2	0.3	13.4	0.0	0.0	0.0
	Min	-0.2	-0.3	8.0	0.0	0.0	0.0

	RC ENV~2	Max	0.1	-0.0	9.9	0.0	0.0	0.0
		Min	-0.1	-0.0	8.1	0.0	0.0	0.0
585	SX (RS)		0.2	0.0	0.1	0.0	0.0	0.0
	SY (RS)		0.0	0.3	0.0	0.0	0.0	0.0
	RC ENV~1	Max	0.2	0.3	13.6	0.0	0.0	0.0
		Min	-0.2	-0.3	8.1	0.0	0.0	0.0
	RC ENV~2	Max	0.1	-0.0	10.1	0.0	0.0	0.0
		Min	-0.1	-0.0	8.2	0.0	0.0	0.0
586	SX (RS)		0.2	0.0	0.1	0.0	0.0	0.0
	SY (RS)		0.0	0.3	0.0	0.0	0.0	0.0
	RC ENV~1	Max	0.2	0.3	13.8	0.0	0.0	0.0
		Min	-0.2	-0.3	8.2	0.0	0.0	0.0
	RC ENV~2	Max	0.1	-0.0	10.2	0.0	0.0	0.0
		Min	-0.1	-0.0	8.3	0.0	0.0	0.0
587	SX (RS)		0.2	0.0	0.2	0.0	0.0	0.0
	SY (RS)		0.0	0.3	0.0	0.0	0.0	0.0
	RC ENV~1	Max	0.2	0.3	13.9	0.0	0.0	0.0
		Min	-0.2	-0.3	8.3	0.0	0.0	0.0
	RC ENV~2	Max	0.1	0.0	10.3	0.0	0.0	0.0
		Min	-0.1	-0.0	8.4	0.0	0.0	0.0
588	SX (RS)		0.2	0.0	0.1	0.0	0.0	0.0
	SY (RS)		0.0	0.3	0.0	0.0	0.0	0.0
	RC ENV~1	Max	0.2	0.3	13.2	0.0	0.0	0.0
		Min	-0.2	-0.3	7.8	0.0	0.0	0.0
	RC ENV~2	Max	0.1	-0.0	9.8	0.0	0.0	0.0
		Min	-0.1	-0.0	7.9	0.0	0.0	0.0
589	SX (RS)		0.2	0.0	0.1	0.0	0.0	0.0
	SY (RS)		0.0	0.3	0.0	0.0	0.0	0.0
	RC ENV~1	Max	0.2	0.3	13.3	0.0	0.0	0.0
		Min	-0.2	-0.3	7.8	0.0	0.0	0.0
	RC ENV~2	Max	0.1	-0.0	9.8	0.0	0.0	0.0
		Min	-0.1	-0.0	7.9	0.0	0.0	0.0
590	SX (RS)		0.2	0.0	0.1	0.0	0.0	0.0
	SY (RS)		0.0	0.3	0.0	0.0	0.0	0.0
	RC ENV~1	Max	0.2	0.3	13.4	0.0	0.0	0.0
		Min	-0.2	-0.3	7.9	0.0	0.0	0.0
	RC ENV~2	Max	0.1	-0.0	9.9	0.0	0.0	0.0
		Min	-0.1	-0.0	8.0	0.0	0.0	0.0
591	SX (RS)		0.2	0.0	0.1	0.0	0.0	0.0
	SY (RS)		0.0	0.3	0.0	0.0	0.0	0.0
	RC ENV~1	Max	0.2	0.3	13.6	0.0	0.0	0.0
		Min	-0.2	-0.3	8.0	0.0	0.0	0.0
	RC ENV~2	Max	0.1	-0.0	10.0	0.0	0.0	0.0
		Min	-0.1	-0.0	8.1	0.0	0.0	0.0
592	SX (RS)		0.2	0.0	0.1	0.0	0.0	0.0
	SY (RS)		0.0	0.3	0.0	0.0	0.0	0.0
	RC ENV~1	Max	0.2	0.3	13.8	0.0	0.0	0.0
		Min	-0.2	-0.3	8.1	0.0	0.0	0.0
	RC ENV~2	Max	0.1	-0.0	10.2	0.0	0.0	0.0
		Min	-0.1	-0.0	8.2	0.0	0.0	0.0
593	SX (RS)		0.2	0.0	0.1	0.0	0.0	0.0
	SY (RS)		0.0	0.3	0.0	0.0	0.0	0.0

	RC ENV~1	Max	0.2	0.3	14.0	0.0	0.0	0.0
		Min	-0.2	-0.3	8.2	0.0	0.0	0.0
	RC ENV~2	Max	0.1	-0.0	10.3	0.0	0.0	0.0
		Min	-0.1	-0.0	8.3	0.0	0.0	0.0
594		SX (RS)	0.2	0.0	0.2	0.0	0.0	0.0
		SY (RS)	0.0	0.3	0.0	0.0	0.0	0.0
	RC ENV~1	Max	0.2	0.3	14.1	0.0	0.0	0.0
		Min	-0.2	-0.3	8.3	0.0	0.0	0.0
	RC ENV~2	Max	0.1	-0.0	10.4	0.0	0.0	0.0
		Min	-0.1	-0.0	8.4	0.0	0.0	0.0
595		SX (RS)	0.2	0.0	0.1	0.0	0.0	0.0
		SY (RS)	0.0	0.3	0.0	0.0	0.0	0.0
	RC ENV~1	Max	0.2	0.3	13.4	0.0	0.0	0.0
		Min	-0.2	-0.3	7.8	0.0	0.0	0.0
	RC ENV~2	Max	0.1	-0.0	9.9	0.0	0.0	0.0
		Min	-0.1	-0.0	7.8	0.0	0.0	0.0
596		SX (RS)	0.2	0.0	0.1	0.0	0.0	0.0
		SY (RS)	0.0	0.3	0.0	0.0	0.0	0.0
	RC ENV~1	Max	0.2	0.3	13.5	0.0	0.0	0.0
		Min	-0.2	-0.3	7.8	0.0	0.0	0.0
	RC ENV~2	Max	0.1	-0.0	9.9	0.0	0.0	0.0
		Min	-0.1	-0.0	7.9	0.0	0.0	0.0
597		SX (RS)	0.2	0.0	0.1	0.0	0.0	0.0
		SY (RS)	0.0	0.3	0.0	0.0	0.0	0.0
	RC ENV~1	Max	0.2	0.3	13.6	0.0	0.0	0.0
		Min	-0.2	-0.3	7.9	0.0	0.0	0.0
	RC ENV~2	Max	0.1	-0.0	10.0	0.0	0.0	0.0
		Min	-0.1	-0.0	8.0	0.0	0.0	0.0
598		SX (RS)	0.2	0.0	0.1	0.0	0.0	0.0
		SY (RS)	0.0	0.3	0.0	0.0	0.0	0.0
	RC ENV~1	Max	0.2	0.3	13.8	0.0	0.0	0.0
		Min	-0.2	-0.3	7.9	0.0	0.0	0.0
	RC ENV~2	Max	0.1	-0.0	10.2	0.0	0.0	0.0
		Min	-0.1	-0.0	8.1	0.0	0.0	0.0
599		SX (RS)	0.2	0.0	0.1	0.0	0.0	0.0
		SY (RS)	0.0	0.3	0.0	0.0	0.0	0.0
	RC ENV~1	Max	0.2	0.3	14.0	0.0	0.0	0.0
		Min	-0.2	-0.3	8.1	0.0	0.0	0.0
	RC ENV~2	Max	0.1	-0.0	10.3	0.0	0.0	0.0
		Min	-0.1	-0.0	8.2	0.0	0.0	0.0
600		SX (RS)	0.2	0.0	0.1	0.0	0.0	0.0
		SY (RS)	0.0	0.3	0.0	0.0	0.0	0.0
	RC ENV~1	Max	0.2	0.3	14.2	0.0	0.0	0.0
		Min	-0.2	-0.3	8.2	0.0	0.0	0.0
	RC ENV~2	Max	0.1	-0.0	10.4	0.0	0.0	0.0
		Min	-0.1	-0.0	8.3	0.0	0.0	0.0
601		SX (RS)	0.2	0.0	0.2	0.0	0.0	0.0
		SY (RS)	0.0	0.3	0.0	0.0	0.0	0.0
	RC ENV~1	Max	0.2	0.3	14.3	0.0	0.0	0.0
		Min	-0.2	-0.3	8.3	0.0	0.0	0.0
	RC ENV~2	Max	0.1	-0.0	10.6	0.0	0.0	0.0
		Min	-0.1	-0.0	8.5	0.0	0.0	0.0
602		SX (RS)	0.2	0.0	0.1	0.0	0.0	0.0

	SY (RS)	0.0	0.3	0.0	0.0	0.0	0.0
RC ENV~1	Max	0.2	0.3	13.5	0.0	0.0	0.0
	Min	-0.2	-0.3	7.8	0.0	0.0	0.0
RC ENV~2	Max	0.1	-0.0	9.9	0.0	0.0	0.0
	Min	-0.1	-0.0	7.8	0.0	0.0	0.0
603	SX (RS)	0.2	0.0	0.1	0.0	0.0	0.0
	SY (RS)	0.0	0.3	0.0	0.0	0.0	0.0
RC ENV~1	Max	0.2	0.3	13.6	0.0	0.0	0.0
	Min	-0.2	-0.3	7.8	0.0	0.0	0.0
RC ENV~2	Max	0.1	-0.0	10.0	0.0	0.0	0.0
	Min	-0.1	-0.0	7.9	0.0	0.0	0.0
604	SX (RS)	0.2	0.0	0.1	0.0	0.0	0.0
	SY (RS)	0.0	0.3	0.0	0.0	0.0	0.0
RC ENV~1	Max	0.2	0.3	13.8	0.0	0.0	0.0
	Min	-0.2	-0.3	7.8	0.0	0.0	0.0
RC ENV~2	Max	0.1	-0.0	10.1	0.0	0.0	0.0
	Min	-0.1	-0.0	7.9	0.0	0.0	0.0
605	SX (RS)	0.2	0.0	0.1	0.0	0.0	0.0
	SY (RS)	0.0	0.3	0.0	0.0	0.0	0.0
RC ENV~1	Max	0.2	0.3	14.0	0.0	0.0	0.0
	Min	-0.2	-0.3	7.9	0.0	0.0	0.0
RC ENV~2	Max	0.1	-0.0	10.3	0.0	0.0	0.0
	Min	-0.1	-0.0	8.0	0.0	0.0	0.0
606	SX (RS)	0.2	0.0	0.1	0.0	0.0	0.0
	SY (RS)	0.0	0.3	0.0	0.0	0.0	0.0
RC ENV~1	Max	0.2	0.3	14.2	0.0	0.0	0.0
	Min	-0.2	-0.3	8.1	0.0	0.0	0.0
RC ENV~2	Max	0.1	-0.0	10.4	0.0	0.0	0.0
	Min	-0.1	-0.0	8.2	0.0	0.0	0.0
607	SX (RS)	0.2	0.0	0.1	0.0	0.0	0.0
	SY (RS)	0.0	0.3	0.0	0.0	0.0	0.0
RC ENV~1	Max	0.2	0.3	14.4	0.0	0.0	0.0
	Min	-0.2	-0.3	8.2	0.0	0.0	0.0
RC ENV~2	Max	0.1	-0.0	10.6	0.0	0.0	0.0
	Min	-0.1	-0.0	8.3	0.0	0.0	0.0
608	SX (RS)	0.2	0.0	0.2	0.0	0.0	0.0
	SY (RS)	0.0	0.3	0.0	0.0	0.0	0.0
RC ENV~1	Max	0.2	0.3	14.5	0.0	0.0	0.0
	Min	-0.2	-0.3	8.3	0.0	0.0	0.0
RC ENV~2	Max	0.1	-0.0	10.7	0.0	0.0	0.0
	Min	-0.1	-0.0	8.5	0.0	0.0	0.0
609	SX (RS)	0.2	0.0	0.2	0.0	0.0	0.0
	SY (RS)	0.0	0.3	0.0	0.0	0.0	0.0
RC ENV~1	Max	0.2	0.3	12.4	0.0	0.0	0.0
	Min	-0.2	-0.3	7.7	0.0	0.0	0.0
RC ENV~2	Max	0.1	-0.0	9.2	0.0	0.0	0.0
	Min	-0.1	-0.0	7.8	0.0	0.0	0.0
610	SX (RS)	0.2	0.0	0.1	0.0	0.0	0.0
	SY (RS)	0.0	0.3	0.0	0.0	0.0	0.0
RC ENV~1	Max	0.2	0.3	12.3	0.0	0.0	0.0
	Min	-0.2	-0.3	7.6	0.0	0.0	0.0
RC ENV~2	Max	0.1	-0.0	9.2	0.0	0.0	0.0
	Min	-0.1	-0.0	7.7	0.0	0.0	0.0

611	SX (RS)	0.2	0.0	0.1	0.0	0.0	0.0
	SY (RS)	0.0	0.3	0.0	0.0	0.0	0.0
RC ENV~1	Max	0.2	0.3	12.3	0.0	0.0	0.0
	Min	-0.2	-0.3	7.5	0.0	0.0	0.0
RC ENV~2	Max	0.1	-0.0	9.2	0.0	0.0	0.0
	Min	-0.1	-0.0	7.6	0.0	0.0	0.0
612	SX (RS)	0.2	0.0	0.1	0.0	0.0	0.0
	SY (RS)	0.0	0.3	0.0	0.0	0.0	0.0
RC ENV~1	Max	0.2	0.3	12.4	0.0	0.0	0.0
	Min	-0.2	-0.3	7.5	0.0	0.0	0.0
RC ENV~2	Max	0.1	-0.0	9.2	0.0	0.0	0.0
	Min	-0.1	-0.0	7.6	0.0	0.0	0.0
613	SX (RS)	0.2	0.0	0.1	0.0	0.0	0.0
	SY (RS)	0.0	0.3	0.1	0.0	0.0	0.0
RC ENV~1	Max	0.2	0.3	12.5	0.0	0.0	0.0
	Min	-0.2	-0.3	7.4	0.0	0.0	0.0
RC ENV~2	Max	0.1	-0.0	9.3	0.0	0.0	0.0
	Min	-0.1	-0.0	7.5	0.0	0.0	0.0
614	SX (RS)	0.2	0.0	0.1	0.0	0.0	0.0
	SY (RS)	0.0	0.3	0.1	0.0	0.0	0.0
RC ENV~1	Max	0.2	0.3	12.8	0.0	0.0	0.0
	Min	-0.2	-0.3	7.5	0.0	0.0	0.0
RC ENV~2	Max	0.1	-0.0	9.4	0.0	0.0	0.0
	Min	-0.1	-0.0	7.6	0.0	0.0	0.0
615	SX (RS)	0.2	0.0	0.1	0.0	0.0	0.0
	SY (RS)	0.0	0.3	0.1	0.0	0.0	0.0
RC ENV~1	Max	0.2	0.3	13.1	0.0	0.0	0.0
	Min	-0.2	-0.3	7.6	0.0	0.0	0.0
RC ENV~2	Max	0.1	-0.0	9.6	0.0	0.0	0.0
	Min	-0.1	-0.0	7.6	0.0	0.0	0.0
616	SX (RS)	0.2	0.0	0.0	0.0	0.0	0.0
	SY (RS)	0.0	0.3	0.1	0.0	0.0	0.0
RC ENV~1	Max	0.2	0.3	13.3	0.0	0.0	0.0
	Min	-0.2	-0.3	7.6	0.0	0.0	0.0
RC ENV~2	Max	0.1	-0.0	9.8	0.0	0.0	0.0
	Min	-0.1	-0.0	7.7	0.0	0.0	0.0
617	SX (RS)	0.2	0.0	0.2	0.0	0.0	0.0
	SY (RS)	0.0	0.3	0.1	0.0	0.0	0.0
RC ENV~1	Max	0.2	0.3	12.2	0.0	0.0	0.0
	Min	-0.2	-0.3	7.6	0.0	0.0	0.0
RC ENV~2	Max	0.1	-0.0	9.1	0.0	0.0	0.0
	Min	-0.1	-0.0	7.8	0.0	0.0	0.0
618	SX (RS)	0.2	0.0	0.1	0.0	0.0	0.0
	SY (RS)	0.0	0.3	0.1	0.0	0.0	0.0
RC ENV~1	Max	0.2	0.3	12.2	0.0	0.0	0.0
	Min	-0.2	-0.3	7.5	0.0	0.0	0.0
RC ENV~2	Max	0.1	-0.0	9.1	0.0	0.0	0.0
	Min	-0.1	-0.0	7.7	0.0	0.0	0.0
619	SX (RS)	0.2	0.0	0.1	0.0	0.0	0.0
	SY (RS)	0.0	0.3	0.1	0.0	0.0	0.0
RC ENV~1	Max	0.2	0.3	12.3	0.0	0.0	0.0
	Min	-0.2	-0.3	7.5	0.0	0.0	0.0

	RC ENV~2	Max	0.1	-0.0	9.1	0.0	0.0	0.0
		Min	-0.1	-0.0	7.6	0.0	0.0	0.0
620	SX (RS)		0.2	0.0	0.1	0.0	0.0	0.0
	SY (RS)		0.0	0.3	0.1	0.0	0.0	0.0
	RC ENV~1	Max	0.2	0.3	12.3	0.0	0.0	0.0
		Min	-0.2	-0.3	7.4	0.0	0.0	0.0
	RC ENV~2	Max	0.1	-0.0	9.2	0.0	0.0	0.0
		Min	-0.1	-0.0	7.5	0.0	0.0	0.0
621	SX (RS)		0.2	0.0	0.1	0.0	0.0	0.0
	SY (RS)		0.0	0.3	0.1	0.0	0.0	0.0
	RC ENV~1	Max	0.2	0.3	12.5	0.0	0.0	0.0
		Min	-0.2	-0.3	7.4	0.0	0.0	0.0
	RC ENV~2	Max	0.1	-0.0	9.3	0.0	0.0	0.0
		Min	-0.1	-0.0	7.5	0.0	0.0	0.0
622	SX (RS)		0.2	0.0	0.1	0.0	0.0	0.0
	SY (RS)		0.0	0.3	0.1	0.0	0.0	0.0
	RC ENV~1	Max	0.2	0.3	12.7	0.0	0.0	0.0
		Min	-0.2	-0.3	7.4	0.0	0.0	0.0
	RC ENV~2	Max	0.1	-0.0	9.4	0.0	0.0	0.0
		Min	-0.1	-0.0	7.5	0.0	0.0	0.0
623	SX (RS)		0.2	0.0	0.0	0.0	0.0	0.0
	SY (RS)		0.0	0.3	0.1	0.0	0.0	0.0
	RC ENV~1	Max	0.2	0.3	13.0	0.0	0.0	0.0
		Min	-0.2	-0.3	7.5	0.0	0.0	0.0
	RC ENV~2	Max	0.1	-0.0	9.6	0.0	0.0	0.0
		Min	-0.1	-0.0	7.6	0.0	0.0	0.0
624	SX (RS)		0.2	0.0	0.0	0.0	0.0	0.0
	SY (RS)		0.0	0.3	0.1	0.0	0.0	0.0
	RC ENV~1	Max	0.2	0.3	13.4	0.0	0.0	0.0
		Min	-0.2	-0.3	7.5	0.0	0.0	0.0
	RC ENV~2	Max	0.1	-0.0	9.8	0.0	0.0	0.0
		Min	-0.1	-0.0	7.6	0.0	0.0	0.0
625	SX (RS)		0.2	0.0	0.2	0.0	0.0	0.0
	SY (RS)		0.0	0.3	0.1	0.0	0.0	0.0
	RC ENV~1	Max	0.2	0.3	12.1	0.0	0.0	0.0
		Min	-0.2	-0.3	7.5	0.0	0.0	0.0
	RC ENV~2	Max	0.1	-0.0	9.0	0.0	0.0	0.0
		Min	-0.1	-0.0	7.7	0.0	0.0	0.0
626	SX (RS)		0.2	0.0	0.2	0.0	0.0	0.0
	SY (RS)		0.0	0.3	0.1	0.0	0.0	0.0
	RC ENV~1	Max	0.2	0.3	12.2	0.0	0.0	0.0
		Min	-0.2	-0.3	7.5	0.0	0.0	0.0
	RC ENV~2	Max	0.1	-0.0	9.0	0.0	0.0	0.0
		Min	-0.1	-0.0	7.6	0.0	0.0	0.0
627	SX (RS)		0.2	0.0	0.1	0.0	0.0	0.0
	SY (RS)		0.0	0.3	0.1	0.0	0.0	0.0
	RC ENV~1	Max	0.2	0.3	12.2	0.0	0.0	0.0
		Min	-0.2	-0.3	7.4	0.0	0.0	0.0
	RC ENV~2	Max	0.1	-0.0	9.1	0.0	0.0	0.0
		Min	-0.1	-0.0	7.5	0.0	0.0	0.0
628	SX (RS)		0.2	0.0	0.1	0.0	0.0	0.0
	SY (RS)		0.0	0.3	0.1	0.0	0.0	0.0
	RC ENV~1	Max	0.2	0.3	12.3	0.0	0.0	0.0

	Min	-0.2	-0.3	7.4	0.0	0.0	0.0
RC ENV~2	Max	0.1	-0.0	9.1	0.0	0.0	0.0
	Min	-0.1	-0.0	7.5	0.0	0.0	0.0
629	SX (RS)	0.2	0.0	0.1	0.0	0.0	0.0
	SY (RS)	0.0	0.3	0.1	0.0	0.0	0.0
RC ENV~1	Max	0.2	0.3	12.5	0.0	0.0	0.0
	Min	-0.2	-0.3	7.3	0.0	0.0	0.0
RC ENV~2	Max	0.1	-0.0	9.2	0.0	0.0	0.0
	Min	-0.1	-0.0	7.4	0.0	0.0	0.0
630	SX (RS)	0.2	0.0	0.1	0.0	0.0	0.0
	SY (RS)	0.0	0.3	0.1	0.0	0.0	0.0
RC ENV~1	Max	0.2	0.3	12.8	0.0	0.0	0.0
	Min	-0.2	-0.3	7.3	0.0	0.0	0.0
RC ENV~2	Max	0.1	-0.0	9.4	0.0	0.0	0.0
	Min	-0.1	-0.0	7.5	0.0	0.0	0.0
631	SX (RS)	0.2	0.0	0.0	0.0	0.0	0.0
	SY (RS)	0.0	0.3	0.1	0.0	0.0	0.0
RC ENV~1	Max	0.2	0.3	13.1	0.0	0.0	0.0
	Min	-0.2	-0.3	7.4	0.0	0.0	0.0
RC ENV~2	Max	0.1	-0.0	9.6	0.0	0.0	0.0
	Min	-0.1	-0.0	7.5	0.0	0.0	0.0
632	SX (RS)	0.2	0.0	0.0	0.0	0.0	0.0
	SY (RS)	0.0	0.3	0.1	0.0	0.0	0.0
RC ENV~1	Max	0.2	0.3	13.4	0.0	0.0	0.0
	Min	-0.2	-0.3	7.5	0.0	0.0	0.0
RC ENV~2	Max	0.1	-0.0	9.8	0.0	0.0	0.0
	Min	-0.1	-0.0	7.6	0.0	0.0	0.0
633	SX (RS)	0.2	0.0	0.2	0.0	0.0	0.0
	SY (RS)	0.0	0.3	0.1	0.0	0.0	0.0
RC ENV~1	Max	0.2	0.3	12.1	0.0	0.0	0.0
	Min	-0.2	-0.3	7.4	0.0	0.0	0.0
RC ENV~2	Max	0.1	-0.0	9.0	0.0	0.0	0.0
	Min	-0.1	-0.0	7.7	0.0	0.0	0.0
634	SX (RS)	0.2	0.0	0.2	0.0	0.0	0.0
	SY (RS)	0.0	0.3	0.1	0.0	0.0	0.0
RC ENV~1	Max	0.2	0.3	12.1	0.0	0.0	0.0
	Min	-0.2	-0.3	7.4	0.0	0.0	0.0
RC ENV~2	Max	0.1	-0.0	9.0	0.0	0.0	0.0
	Min	-0.1	-0.0	7.6	0.0	0.0	0.0
635	SX (RS)	0.2	0.0	0.1	0.0	0.0	0.0
	SY (RS)	0.0	0.3	0.1	0.0	0.0	0.0
RC ENV~1	Max	0.2	0.3	12.2	0.0	0.0	0.0
	Min	-0.2	-0.3	7.4	0.0	0.0	0.0
RC ENV~2	Max	0.1	-0.0	9.0	0.0	0.0	0.0
	Min	-0.1	-0.0	7.5	0.0	0.0	0.0
636	SX (RS)	0.2	0.0	0.1	0.0	0.0	0.0
	SY (RS)	0.0	0.3	0.2	0.0	0.0	0.0
RC ENV~1	Max	0.2	0.3	12.3	0.0	0.0	0.0
	Min	-0.2	-0.3	7.3	0.0	0.0	0.0
RC ENV~2	Max	0.1	-0.0	9.1	0.0	0.0	0.0
	Min	-0.1	-0.0	7.4	0.0	0.0	0.0
637	SX (RS)	0.2	0.0	0.1	0.0	0.0	0.0
	SY (RS)	0.0	0.3	0.2	0.0	0.0	0.0

	RC ENV~1	Max	0.2	0.3	12.5	0.0	0.0	0.0
		Min	-0.2	-0.3	7.3	0.0	0.0	0.0
	RC ENV~2	Max	0.1	-0.0	9.2	0.0	0.0	0.0
		Min	-0.1	-0.0	7.4	0.0	0.0	0.0
638	SX (RS)		0.2	0.0	0.1	0.0	0.0	0.0
	SY (RS)		0.0	0.3	0.2	0.0	0.0	0.0
	RC ENV~1	Max	0.2	0.3	12.8	0.0	0.0	0.0
		Min	-0.2	-0.3	7.3	0.0	0.0	0.0
	RC ENV~2	Max	0.1	-0.0	9.4	0.0	0.0	0.0
		Min	-0.1	-0.0	7.5	0.0	0.0	0.0
639	SX (RS)		0.2	0.0	0.0	0.0	0.0	0.0
	SY (RS)		0.0	0.3	0.2	0.0	0.0	0.0
	RC ENV~1	Max	0.2	0.3	13.1	0.0	0.0	0.0
		Min	-0.2	-0.3	7.3	0.0	0.0	0.0
	RC ENV~2	Max	0.1	-0.0	9.6	0.0	0.0	0.0
		Min	-0.1	-0.0	7.5	0.0	0.0	0.0
640	SX (RS)		0.2	0.0	0.0	0.0	0.0	0.0
	SY (RS)		0.0	0.3	0.2	0.0	0.0	0.0
	RC ENV~1	Max	0.2	0.3	13.4	0.0	0.0	0.0
		Min	-0.2	-0.3	7.4	0.0	0.0	0.0
	RC ENV~2	Max	0.1	-0.0	9.9	0.0	0.0	0.0
		Min	-0.1	-0.0	7.6	0.0	0.0	0.0
641	SX (RS)		0.2	0.0	0.3	0.0	0.0	0.0
	SY (RS)		0.0	0.3	0.2	0.0	0.0	0.0
	RC ENV~1	Max	0.2	0.3	12.0	0.0	0.0	0.0
		Min	-0.2	-0.3	7.4	0.0	0.0	0.0
	RC ENV~2	Max	0.1	-0.0	9.0	0.0	0.0	0.0
		Min	-0.1	-0.0	7.7	0.0	0.0	0.0
642	SX (RS)		0.2	0.0	0.2	0.0	0.0	0.0
	SY (RS)		0.0	0.3	0.2	0.0	0.0	0.0
	RC ENV~1	Max	0.2	0.3	12.1	0.0	0.0	0.0
		Min	-0.2	-0.3	7.4	0.0	0.0	0.0
	RC ENV~2	Max	0.1	-0.0	9.0	0.0	0.0	0.0
		Min	-0.1	-0.0	7.6	0.0	0.0	0.0
643	SX (RS)		0.2	0.0	0.1	0.0	0.0	0.0
	SY (RS)		0.0	0.3	0.2	0.0	0.0	0.0
	RC ENV~1	Max	0.2	0.3	12.2	0.0	0.0	0.0
		Min	-0.2	-0.3	7.3	0.0	0.0	0.0
	RC ENV~2	Max	0.1	-0.0	9.1	0.0	0.0	0.0
		Min	-0.1	-0.0	7.5	0.0	0.0	0.0
644	SX (RS)		0.2	0.0	0.1	0.0	0.0	0.0
	SY (RS)		0.0	0.3	0.2	0.0	0.0	0.0
	RC ENV~1	Max	0.2	0.3	12.3	0.0	0.0	0.0
		Min	-0.2	-0.3	7.3	0.0	0.0	0.0
	RC ENV~2	Max	0.1	-0.0	9.1	0.0	0.0	0.0
		Min	-0.1	-0.0	7.5	0.0	0.0	0.0
645	SX (RS)		0.2	0.0	0.1	0.0	0.0	0.0
	SY (RS)		0.0	0.3	0.2	0.0	0.0	0.0
	RC ENV~1	Max	0.2	0.3	12.6	0.0	0.0	0.0
		Min	-0.2	-0.3	7.2	0.0	0.0	0.0
	RC ENV~2	Max	0.1	-0.0	9.3	0.0	0.0	0.0
		Min	-0.1	-0.0	7.4	0.0	0.0	0.0

646	SX (RS)	0.2	0.0	0.1	0.0	0.0	0.0
	SY (RS)	0.0	0.3	0.2	0.0	0.0	0.0
RC ENV~1	Max	0.2	0.3	12.8	0.0	0.0	0.0
	Min	-0.2	-0.3	7.2	0.0	0.0	0.0
RC ENV~2	Max	0.1	-0.0	9.5	0.0	0.0	0.0
	Min	-0.1	-0.0	7.5	0.0	0.0	0.0
647	SX (RS)	0.2	0.0	0.0	0.0	0.0	0.0
	SY (RS)	0.0	0.3	0.2	0.0	0.0	0.0
RC ENV~1	Max	0.2	0.3	13.2	0.0	0.0	0.0
	Min	-0.2	-0.3	7.3	0.0	0.0	0.0
RC ENV~2	Max	0.1	-0.0	9.7	0.0	0.0	0.0
	Min	-0.1	-0.0	7.5	0.0	0.0	0.0
648	SX (RS)	0.2	0.0	0.0	0.0	0.0	0.0
	SY (RS)	0.0	0.3	0.2	0.0	0.0	0.0
RC ENV~1	Max	0.2	0.3	13.5	0.0	0.0	0.0
	Min	-0.2	-0.3	7.3	0.0	0.0	0.0
RC ENV~2	Max	0.1	-0.0	9.9	0.0	0.0	0.0
	Min	-0.1	-0.0	7.6	0.0	0.0	0.0
649	SX (RS)	0.2	0.0	0.3	0.0	0.0	0.0
	SY (RS)	0.0	0.3	0.3	0.0	0.0	0.0
RC ENV~1	Max	0.2	0.3	12.0	0.0	0.0	0.0
	Min	-0.2	-0.3	7.4	0.0	0.0	0.0
RC ENV~2	Max	0.1	-0.0	9.0	0.0	0.0	0.0
	Min	-0.1	-0.0	7.7	0.0	0.0	0.0
650	SX (RS)	0.2	0.0	0.2	0.0	0.0	0.0
	SY (RS)	0.0	0.3	0.3	0.0	0.0	0.0
RC ENV~1	Max	0.2	0.3	12.1	0.0	0.0	0.0
	Min	-0.2	-0.3	7.3	0.0	0.0	0.0
RC ENV~2	Max	0.1	-0.0	9.0	0.0	0.0	0.0
	Min	-0.1	-0.0	7.6	0.0	0.0	0.0
651	SX (RS)	0.2	0.0	0.1	0.0	0.0	0.0
	SY (RS)	0.0	0.3	0.3	0.0	0.0	0.0
RC ENV~1	Max	0.2	0.3	12.2	0.0	0.0	0.0
	Min	-0.2	-0.3	7.3	0.0	0.0	0.0
RC ENV~2	Max	0.1	-0.0	9.1	0.0	0.0	0.0
	Min	-0.1	-0.0	7.5	0.0	0.0	0.0
652	SX (RS)	0.2	0.0	0.1	0.0	0.0	0.0
	SY (RS)	0.0	0.3	0.3	0.0	0.0	0.0
RC ENV~1	Max	0.2	0.3	12.4	0.0	0.0	0.0
	Min	-0.2	-0.3	7.2	0.0	0.0	0.0
RC ENV~2	Max	0.1	-0.0	9.2	0.0	0.0	0.0
	Min	-0.1	-0.0	7.5	0.0	0.0	0.0
653	SX (RS)	0.2	0.0	0.1	0.0	0.0	0.0
	SY (RS)	0.0	0.3	0.3	0.0	0.0	0.0
RC ENV~1	Max	0.2	0.3	12.6	0.0	0.0	0.0
	Min	-0.2	-0.3	7.2	0.0	0.0	0.0
RC ENV~2	Max	0.1	-0.0	9.3	0.0	0.0	0.0
	Min	-0.1	-0.0	7.5	0.0	0.0	0.0
654	SX (RS)	0.2	0.0	0.1	0.0	0.0	0.0
	SY (RS)	0.0	0.3	0.3	0.0	0.0	0.0
RC ENV~1	Max	0.2	0.3	12.9	0.0	0.0	0.0
	Min	-0.2	-0.3	7.2	0.0	0.0	0.0
RC ENV~2	Max	0.1	-0.0	9.5	0.0	0.0	0.0

	Min	-0.1	-0.0	7.5	0.0	0.0	0.0
655	SX (RS)	0.2	0.0	0.0	0.0	0.0	0.0
	SY (RS)	0.0	0.3	0.3	0.0	0.0	0.0
RC ENV~1	Max	0.2	0.3	13.3	0.0	0.0	0.0
	Min	-0.2	-0.3	7.2	0.0	0.0	0.0
RC ENV~2	Max	0.1	-0.0	9.7	0.0	0.0	0.0
	Min	-0.1	-0.0	7.5	0.0	0.0	0.0
656	SX (RS)	0.2	0.0	0.0	0.0	0.0	0.0
	SY (RS)	0.0	0.3	0.3	0.0	0.0	0.0
RC ENV~1	Max	0.2	0.3	13.6	0.0	0.0	0.0
	Min	-0.2	-0.3	7.3	0.0	0.0	0.0
RC ENV~2	Max	0.1	-0.0	10.0	0.0	0.0	0.0
	Min	-0.1	-0.0	7.6	0.0	0.0	0.0
657	SX (RS)	0.2	0.0	0.1	0.0	0.0	0.0
	SY (RS)	0.0	0.3	0.1	0.0	0.0	0.0
RC ENV~1	Max	0.2	0.3	13.6	0.0	0.0	0.0
	Min	-0.2	-0.3	7.7	0.0	0.0	0.0
RC ENV~2	Max	0.1	-0.0	10.0	0.0	0.0	0.0
	Min	-0.1	-0.0	7.8	0.0	0.0	0.0
658	SX (RS)	0.2	0.0	0.1	0.0	0.0	0.0
	SY (RS)	0.0	0.3	0.1	0.0	0.0	0.0
RC ENV~1	Max	0.2	0.3	13.8	0.0	0.0	0.0
	Min	-0.2	-0.3	7.8	0.0	0.0	0.0
RC ENV~2	Max	0.1	-0.0	10.1	0.0	0.0	0.0
	Min	-0.1	-0.0	7.8	0.0	0.0	0.0
659	SX (RS)	0.2	0.0	0.1	0.0	0.0	0.0
	SY (RS)	0.0	0.3	0.1	0.0	0.0	0.0
RC ENV~1	Max	0.2	0.3	14.0	0.0	0.0	0.0
	Min	-0.2	-0.3	7.8	0.0	0.0	0.0
RC ENV~2	Max	0.1	-0.0	10.2	0.0	0.0	0.0
	Min	-0.1	-0.0	7.9	0.0	0.0	0.0
660	SX (RS)	0.2	0.0	0.1	0.0	0.0	0.0
	SY (RS)	0.0	0.3	0.0	0.0	0.0	0.0
RC ENV~1	Max	0.2	0.3	14.2	0.0	0.0	0.0
	Min	-0.2	-0.3	7.9	0.0	0.0	0.0
RC ENV~2	Max	0.1	-0.0	10.4	0.0	0.0	0.0
	Min	-0.1	-0.0	8.0	0.0	0.0	0.0
661	SX (RS)	0.2	0.0	0.1	0.0	0.0	0.0
	SY (RS)	0.0	0.3	0.0	0.0	0.0	0.0
RC ENV~1	Max	0.2	0.3	14.4	0.0	0.0	0.0
	Min	-0.2	-0.3	8.0	0.0	0.0	0.0
RC ENV~2	Max	0.1	-0.0	10.5	0.0	0.0	0.0
	Min	-0.1	-0.0	8.1	0.0	0.0	0.0
662	SX (RS)	0.2	0.0	0.1	0.0	0.0	0.0
	SY (RS)	0.0	0.3	0.0	0.0	0.0	0.0
RC ENV~1	Max	0.2	0.3	14.6	0.0	0.0	0.0
	Min	-0.2	-0.3	8.2	0.0	0.0	0.0
RC ENV~2	Max	0.1	-0.0	10.7	0.0	0.0	0.0
	Min	-0.1	-0.0	8.3	0.0	0.0	0.0
663	SX (RS)	0.2	0.0	0.2	0.0	0.0	0.0
	SY (RS)	0.0	0.3	0.0	0.0	0.0	0.0
RC ENV~1	Max	0.2	0.3	14.7	0.0	0.0	0.0
	Min	-0.2	-0.3	8.3	0.0	0.0	0.0

	RC ENV~2	Max	0.1	-0.0	10.8	0.0	0.0	0.0
		Min	-0.1	-0.0	8.4	0.0	0.0	0.0
664	SX (RS)		0.2	0.0	0.0	0.0	0.0	0.0
	SY (RS)		0.0	0.3	0.1	0.0	0.0	0.0
	RC ENV~1	Max	0.2	0.3	13.6	0.0	0.0	0.0
		Min	-0.2	-0.3	7.6	0.0	0.0	0.0
	RC ENV~2	Max	0.1	-0.0	10.0	0.0	0.0	0.0
		Min	-0.1	-0.0	7.7	0.0	0.0	0.0
665	SX (RS)		0.2	0.0	0.1	0.0	0.0	0.0
	SY (RS)		0.0	0.3	0.1	0.0	0.0	0.0
	RC ENV~1	Max	0.2	0.3	13.9	0.0	0.0	0.0
		Min	-0.2	-0.3	7.7	0.0	0.0	0.0
	RC ENV~2	Max	0.1	-0.0	10.2	0.0	0.0	0.0
		Min	-0.1	-0.0	7.8	0.0	0.0	0.0
666	SX (RS)		0.2	0.0	0.1	0.0	0.0	0.0
	SY (RS)		0.0	0.3	0.1	0.0	0.0	0.0
	RC ENV~1	Max	0.2	0.3	14.1	0.0	0.0	0.0
		Min	-0.2	-0.3	7.8	0.0	0.0	0.0
	RC ENV~2	Max	0.1	-0.0	10.3	0.0	0.0	0.0
		Min	-0.1	-0.0	7.9	0.0	0.0	0.0
667	SX (RS)		0.2	0.0	0.1	0.0	0.0	0.0
	SY (RS)		0.0	0.3	0.1	0.0	0.0	0.0
	RC ENV~1	Max	0.2	0.3	14.3	0.0	0.0	0.0
		Min	-0.2	-0.3	7.9	0.0	0.0	0.0
	RC ENV~2	Max	0.1	-0.0	10.5	0.0	0.0	0.0
		Min	-0.1	-0.0	8.0	0.0	0.0	0.0
668	SX (RS)		0.2	0.0	0.1	0.0	0.0	0.0
	SY (RS)		0.0	0.3	0.1	0.0	0.0	0.0
	RC ENV~1	Max	0.2	0.3	14.5	0.0	0.0	0.0
		Min	-0.2	-0.3	8.0	0.0	0.0	0.0
	RC ENV~2	Max	0.1	-0.0	10.6	0.0	0.0	0.0
		Min	-0.1	-0.0	8.1	0.0	0.0	0.0
669	SX (RS)		0.2	0.0	0.1	0.0	0.0	0.0
	SY (RS)		0.0	0.3	0.1	0.0	0.0	0.0
	RC ENV~1	Max	0.2	0.3	14.7	0.0	0.0	0.0
		Min	-0.2	-0.3	8.1	0.0	0.0	0.0
	RC ENV~2	Max	0.1	-0.0	10.8	0.0	0.0	0.0
		Min	-0.1	-0.0	8.3	0.0	0.0	0.0
670	SX (RS)		0.2	0.0	0.2	0.0	0.0	0.0
	SY (RS)		0.0	0.3	0.1	0.0	0.0	0.0
	RC ENV~1	Max	0.2	0.3	14.8	0.0	0.0	0.0
		Min	-0.2	-0.3	8.2	0.0	0.0	0.0
	RC ENV~2	Max	0.1	-0.0	10.9	0.0	0.0	0.0
		Min	-0.1	-0.0	8.4	0.0	0.0	0.0
671	SX (RS)		0.2	0.0	0.0	0.0	0.0	0.0
	SY (RS)		0.0	0.3	0.1	0.0	0.0	0.0
	RC ENV~1	Max	0.2	0.3	13.7	0.0	0.0	0.0
		Min	-0.2	-0.3	7.5	0.0	0.0	0.0
	RC ENV~2	Max	0.1	-0.0	10.0	0.0	0.0	0.0
		Min	-0.1	-0.0	7.7	0.0	0.0	0.0
672	SX (RS)		0.2	0.0	0.1	0.0	0.0	0.0
	SY (RS)		0.0	0.3	0.1	0.0	0.0	0.0

	RC ENV~1	Max	0.2	0.3	14.0	0.0	0.0	0.0
		Min	-0.2	-0.3	7.6	0.0	0.0	0.0
	RC ENV~2	Max	0.1	-0.0	10.2	0.0	0.0	0.0
		Min	-0.1	-0.0	7.8	0.0	0.0	0.0
673		SX (RS)	0.2	0.0	0.1	0.0	0.0	0.0
		SY (RS)	0.0	0.3	0.1	0.0	0.0	0.0
	RC ENV~1	Max	0.2	0.3	14.2	0.0	0.0	0.0
		Min	-0.2	-0.3	7.7	0.0	0.0	0.0
	RC ENV~2	Max	0.1	-0.0	10.4	0.0	0.0	0.0
		Min	-0.1	-0.0	7.9	0.0	0.0	0.0
674		SX (RS)	0.2	0.0	0.1	0.0	0.0	0.0
		SY (RS)	0.0	0.3	0.1	0.0	0.0	0.0
	RC ENV~1	Max	0.2	0.3	14.5	0.0	0.0	0.0
		Min	-0.2	-0.3	7.9	0.0	0.0	0.0
	RC ENV~2	Max	0.1	-0.0	10.6	0.0	0.0	0.0
		Min	-0.1	-0.0	8.0	0.0	0.0	0.0
675		SX (RS)	0.2	0.0	0.1	0.0	0.0	0.0
		SY (RS)	0.0	0.3	0.1	0.0	0.0	0.0
	RC ENV~1	Max	0.2	0.3	14.7	0.0	0.0	0.0
		Min	-0.2	-0.3	8.0	0.0	0.0	0.0
	RC ENV~2	Max	0.1	-0.0	10.7	0.0	0.0	0.0
		Min	-0.1	-0.0	8.1	0.0	0.0	0.0
676		SX (RS)	0.2	0.0	0.2	0.0	0.0	0.0
		SY (RS)	0.0	0.3	0.1	0.0	0.0	0.0
	RC ENV~1	Max	0.2	0.3	14.9	0.0	0.0	0.0
		Min	-0.2	-0.3	8.1	0.0	0.0	0.0
	RC ENV~2	Max	0.1	-0.0	10.9	0.0	0.0	0.0
		Min	-0.1	-0.0	8.2	0.0	0.0	0.0
677		SX (RS)	0.2	0.0	0.2	0.0	0.0	0.0
		SY (RS)	0.0	0.3	0.1	0.0	0.0	0.0
	RC ENV~1	Max	0.2	0.3	15.0	0.0	0.0	0.0
		Min	-0.2	-0.3	8.1	0.0	0.0	0.0
	RC ENV~2	Max	0.1	-0.0	11.0	0.0	0.0	0.0
		Min	-0.1	-0.0	8.4	0.0	0.0	0.0
678		SX (RS)	0.2	0.0	0.0	0.0	0.0	0.0
		SY (RS)	0.0	0.3	0.2	0.0	0.0	0.0
	RC ENV~1	Max	0.2	0.3	13.8	0.0	0.0	0.0
		Min	-0.2	-0.3	7.5	0.0	0.0	0.0
	RC ENV~2	Max	0.1	-0.0	10.1	0.0	0.0	0.0
		Min	-0.1	-0.0	7.7	0.0	0.0	0.0
679		SX (RS)	0.2	0.0	0.1	0.0	0.0	0.0
		SY (RS)	0.0	0.3	0.2	0.0	0.0	0.0
	RC ENV~1	Max	0.2	0.3	14.1	0.0	0.0	0.0
		Min	-0.2	-0.3	7.6	0.0	0.0	0.0
	RC ENV~2	Max	0.1	-0.0	10.3	0.0	0.0	0.0
		Min	-0.1	-0.0	7.7	0.0	0.0	0.0
680		SX (RS)	0.2	0.0	0.1	0.0	0.0	0.0
		SY (RS)	0.0	0.3	0.2	0.0	0.0	0.0
	RC ENV~1	Max	0.2	0.3	14.3	0.0	0.0	0.0
		Min	-0.2	-0.3	7.7	0.0	0.0	0.0
	RC ENV~2	Max	0.1	-0.0	10.5	0.0	0.0	0.0
		Min	-0.1	-0.0	7.8	0.0	0.0	0.0
681		SX (RS)	0.2	0.0	0.1	0.0	0.0	0.0

	SY (RS)	0.0	0.3	0.2	0.0	0.0	0.0
	RC ENV~1 Max	0.2	0.3	14.6	0.0	0.0	0.0
	Min	-0.2	-0.3	7.8	0.0	0.0	0.0
	RC ENV~2 Max	0.1	-0.0	10.6	0.0	0.0	0.0
	Min	-0.1	-0.0	7.9	0.0	0.0	0.0
682	SX (RS)	0.2	0.0	0.1	0.0	0.0	0.0
	SY (RS)	0.0	0.3	0.1	0.0	0.0	0.0
	RC ENV~1 Max	0.2	0.3	14.8	0.0	0.0	0.0
	Min	-0.2	-0.3	7.9	0.0	0.0	0.0
	RC ENV~2 Max	0.1	-0.0	10.8	0.0	0.0	0.0
	Min	-0.1	-0.0	8.1	0.0	0.0	0.0
683	SX (RS)	0.2	0.0	0.2	0.0	0.0	0.0
	SY (RS)	0.0	0.3	0.1	0.0	0.0	0.0
	RC ENV~1 Max	0.2	0.3	15.0	0.0	0.0	0.0
	Min	-0.2	-0.3	8.0	0.0	0.0	0.0
	RC ENV~2 Max	0.1	-0.0	10.9	0.0	0.0	0.0
	Min	-0.1	-0.0	8.2	0.0	0.0	0.0
684	SX (RS)	0.2	0.0	0.2	0.0	0.0	0.0
	SY (RS)	0.0	0.3	0.1	0.0	0.0	0.0
	RC ENV~1 Max	0.2	0.3	15.1	0.0	0.0	0.0
	Min	-0.2	-0.3	8.1	0.0	0.0	0.0
	RC ENV~2 Max	0.1	-0.0	11.0	0.0	0.0	0.0
	Min	-0.1	-0.0	8.3	0.0	0.0	0.0
685	SX (RS)	0.2	0.0	0.0	0.0	0.0	0.0
	SY (RS)	0.0	0.3	0.2	0.0	0.0	0.0
	RC ENV~1 Max	0.2	0.3	13.9	0.0	0.0	0.0
	Min	-0.2	-0.3	7.4	0.0	0.0	0.0
	RC ENV~2 Max	0.1	-0.0	10.1	0.0	0.0	0.0
	Min	-0.1	-0.0	7.6	0.0	0.0	0.0
686	SX (RS)	0.2	0.0	0.1	0.0	0.0	0.0
	SY (RS)	0.0	0.3	0.2	0.0	0.0	0.0
	RC ENV~1 Max	0.2	0.3	14.2	0.0	0.0	0.0
	Min	-0.2	-0.3	7.5	0.0	0.0	0.0
	RC ENV~2 Max	0.1	-0.0	10.3	0.0	0.0	0.0
	Min	-0.1	-0.0	7.7	0.0	0.0	0.0
687	SX (RS)	0.2	0.0	0.1	0.0	0.0	0.0
	SY (RS)	0.0	0.3	0.2	0.0	0.0	0.0
	RC ENV~1 Max	0.2	0.3	14.4	0.0	0.0	0.0
	Min	-0.2	-0.3	7.6	0.0	0.0	0.0
	RC ENV~2 Max	0.1	-0.0	10.5	0.0	0.0	0.0
	Min	-0.1	-0.0	7.8	0.0	0.0	0.0
688	SX (RS)	0.2	0.0	0.1	0.0	0.0	0.0
	SY (RS)	0.0	0.3	0.2	0.0	0.0	0.0
	RC ENV~1 Max	0.2	0.3	14.7	0.0	0.0	0.0
	Min	-0.2	-0.3	7.7	0.0	0.0	0.0
	RC ENV~2 Max	0.1	-0.0	10.7	0.0	0.0	0.0
	Min	-0.1	-0.0	7.9	0.0	0.0	0.0
689	SX (RS)	0.2	0.0	0.1	0.0	0.0	0.0
	SY (RS)	0.0	0.3	0.2	0.0	0.0	0.0
	RC ENV~1 Max	0.2	0.3	14.9	0.0	0.0	0.0
	Min	-0.2	-0.3	7.8	0.0	0.0	0.0
	RC ENV~2 Max	0.1	-0.0	10.9	0.0	0.0	0.0
	Min	-0.1	-0.0	8.0	0.0	0.0	0.0

690	SX (RS)	0.2	0.0	0.2	0.0	0.0	0.0
	SY (RS)	0.0	0.3	0.2	0.0	0.0	0.0
RC ENV~1	Max	0.2	0.3	15.1	0.0	0.0	0.0
	Min	-0.2	-0.3	8.0	0.0	0.0	0.0
RC ENV~2	Max	0.1	-0.0	11.0	0.0	0.0	0.0
	Min	-0.1	-0.0	8.2	0.0	0.0	0.0
691	SX (RS)	0.2	0.0	0.3	0.0	0.0	0.0
	SY (RS)	0.0	0.3	0.2	0.0	0.0	0.0
RC ENV~1	Max	0.2	0.3	15.2	0.0	0.0	0.0
	Min	-0.2	-0.3	8.0	0.0	0.0	0.0
RC ENV~2	Max	0.1	-0.0	11.1	0.0	0.0	0.0
	Min	-0.1	-0.0	8.3	0.0	0.0	0.0
692	SX (RS)	0.2	0.0	0.0	0.0	0.0	0.0
	SY (RS)	0.0	0.3	0.3	0.0	0.0	0.0
RC ENV~1	Max	0.2	0.3	14.0	0.0	0.0	0.0
	Min	-0.2	-0.3	7.3	0.0	0.0	0.0
RC ENV~2	Max	0.1	-0.0	10.2	0.0	0.0	0.0
	Min	-0.1	-0.0	7.7	0.0	0.0	0.0
693	SX (RS)	0.2	0.0	0.1	0.0	0.0	0.0
	SY (RS)	0.0	0.3	0.3	0.0	0.0	0.0
RC ENV~1	Max	0.2	0.3	14.3	0.0	0.0	0.0
	Min	-0.2	-0.3	7.4	0.0	0.0	0.0
RC ENV~2	Max	0.1	-0.0	10.4	0.0	0.0	0.0
	Min	-0.1	-0.0	7.7	0.0	0.0	0.0
694	SX (RS)	0.2	0.0	0.1	0.0	0.0	0.0
	SY (RS)	0.0	0.3	0.3	0.0	0.0	0.0
RC ENV~1	Max	0.2	0.3	14.5	0.0	0.0	0.0
	Min	-0.2	-0.3	7.5	0.0	0.0	0.0
RC ENV~2	Max	0.1	-0.0	10.6	0.0	0.0	0.0
	Min	-0.1	-0.0	7.8	0.0	0.0	0.0
695	SX (RS)	0.2	0.0	0.1	0.0	0.0	0.0
	SY (RS)	0.0	0.3	0.3	0.0	0.0	0.0
RC ENV~1	Max	0.2	0.3	14.8	0.0	0.0	0.0
	Min	-0.2	-0.3	7.6	0.0	0.0	0.0
RC ENV~2	Max	0.1	-0.0	10.8	0.0	0.0	0.0
	Min	-0.1	-0.0	7.9	0.0	0.0	0.0
696	SX (RS)	0.2	0.0	0.1	0.0	0.0	0.0
	SY (RS)	0.0	0.3	0.3	0.0	0.0	0.0
RC ENV~1	Max	0.2	0.3	15.0	0.0	0.0	0.0
	Min	-0.2	-0.3	7.7	0.0	0.0	0.0
RC ENV~2	Max	0.1	-0.0	10.9	0.0	0.0	0.0
	Min	-0.1	-0.0	8.0	0.0	0.0	0.0
697	SX (RS)	0.2	0.0	0.2	0.0	0.0	0.0
	SY (RS)	0.0	0.3	0.3	0.0	0.0	0.0
RC ENV~1	Max	0.2	0.3	15.2	0.0	0.0	0.0
	Min	-0.2	-0.3	7.9	0.0	0.0	0.0
RC ENV~2	Max	0.1	-0.0	11.1	0.0	0.0	0.0
	Min	-0.1	-0.0	8.1	0.0	0.0	0.0
698	SX (RS)	0.2	0.0	0.3	0.0	0.0	0.0
	SY (RS)	0.0	0.3	0.3	0.0	0.0	0.0
RC ENV~1	Max	0.2	0.3	15.4	0.0	0.0	0.0
	Min	-0.2	-0.3	8.0	0.0	0.0	0.0

```
RC ENV~2  Max        0.1       -0.0       11.2        0.0        0.0        0.0
          Min       -0.1       -0.0        8.3        0.0        0.0        0.0


 SUMMATION OF REACTION FORCES
_____________________________

          LC          SUM-FX      SUM-FY      SUM-FZ
     -------- ---- ----------- ----------- -----------
          SX (RS)      114.1         0.0         0.0

          SY (RS)        0.0       141.9         0.0
```

REACTION FORCES & MOMENTS LOCAL PRINTOUT Unit System : kN , m

Node	LC		FX	FY	FZ	MX	MY	MZ

PLATE ELEMENT FORCES (GLOBAL) DEFAULT PRINTOUT Unit System : kN , m

ELEM	MAT	SEC	LC		NODE	FX	FY	FZ	MX	MY	MZ
5	1	1	SX (RS)		5	3.2	0.8	3.1	0.9	5.6	0.0
					109	1.2	1.1	1.5	0.2	1.5	0.0
					401	2.1	0.7	4.2	0.5	1.8	0.0
					139	0.1	1.1	2.7	0.5	1.0	0.0
			SY (RS)		5	0.8	2.6	2.6	4.1	0.8	0.0
					109	1.0	0.2	1.8	0.8	0.4	0.0
					401	0.8	1.6	3.0	1.4	0.4	0.0
					139	1.0	0.9	1.4	1.2	0.1	0.0
			RC ENV~1	Max	5	2.5	1.4	-1.9	2.5	7.8	0.0
					109	1.0	1.1	6.4	-1.4	0.7	0.0
					401	2.6	2.4	8.4	2.1	1.2	0.0
					139	1.3	1.5	4.0	2.1	4.4	0.0
				Min	5	-3.8	-3.7	-12.9	-5.7	-3.3	-0.0
					109	-1.4	-1.2	1.0	-3.8	-2.3	0.0
					401	-1.6	-0.9	-0.1	-0.6	-2.4	0.0
					139	-0.7	-0.7	-1.4	-0.3	1.2	0.0
			RC ENV~2	Max	5	0.7	-0.9	-4.4	-1.5	4.6	-0.0
					109	0.4	0.5	4.6	-2.1	-0.3	0.0
					401	1.5	1.3	6.1	0.9	0.1	0.0
					139	0.5	1.0	2.7	1.2	3.2	0.0
				Min	5	-2.2	-1.9	-9.1	-2.2	0.5	-0.0
					109	-0.8	-0.5	2.4	-2.8	-1.5	0.0
					401	-0.4	0.5	2.9	0.4	-1.2	0.0
					139	0.2	-0.1	1.1	0.8	2.0	0.0
6	1	1	SX (RS)		6	1.7	0.7	3.8	0.9	3.5	0.0
					130	0.4	0.7	1.7	0.3	0.5	0.0
					456	1.1	0.6	3.4	0.3	0.6	0.0
					408	0.3	0.6	1.3	0.2	0.5	0.0
			SY (RS)		6	1.4	3.2	5.2	7.3	0.8	0.0
					130	0.8	0.2	3.1	1.1	1.0	0.0
					456	1.2	2.0	5.2	2.1	0.4	0.0
					408	0.9	1.4	3.0	1.9	0.3	0.0
			RC ENV~1	Max	6	1.5	2.5	-5.3	4.8	5.9	0.0
					130	0.6	0.5	6.5	-1.9	0.5	0.0
					456	1.4	2.5	10.7	2.3	0.7	0.0
					408	1.2	1.8	8.3	2.5	4.2	0.0
				Min	6	-1.9	-4.0	-19.7	-9.9	-1.1	-0.0
					130	-1.0	-0.8	0.2	-4.7	-1.4	0.0
					456	-1.0	-1.5	0.3	-1.9	-0.4	0.0
					408	-0.7	-1.0	1.8	-1.3	1.6	0.0
			RC ENV~2	Max	6	0.3	-0.6	-10.2	-2.5	3.9	0.0
					130	-0.0	0.1	4.7	-3.0	-0.3	0.0
					456	0.5	0.9	7.3	0.2	0.4	0.0
					408	0.4	0.7	6.1	0.7	3.1	0.0
				Min	6	-0.7	-1.3	-14.4	-3.1	1.6	-0.0
					130	-0.4	-0.3	3.1	-3.5	-0.8	0.0
					456	-0.1	0.3	5.0	-0.2	-0.1	0.0
					408	0.2	0.2	4.7	0.2	2.1	0.0
7	1	1	SX (RS)		8	3.1	0.9	7.5	2.0	7.6	0.0
					449	1.2	1.0	3.4	1.0	1.9	0.0
					505	2.0	0.8	5.9	0.8	2.1	0.0
					158	0.2	0.9	1.9	0.2	1.8	0.0

			SY (RS)	8	1.8	3.3	5.8	5.2	2.1	0.0
				449	1.1	0.5	1.5	1.2	0.3	0.0
				505	1.5	2.1	4.7	1.3	0.6	0.0
				158	1.3	1.0	2.9	1.3	0.6	0.0
		RC ENV~1	Max	8	5.8	3.6	-5.8	1.2	16.6	0.0
				449	0.7	0.5	14.5	-1.8	0.8	0.0
				505	1.1	1.9	20.0	2.5	1.0	0.0
				158	1.4	1.7	4.4	2.4	7.9	0.0
			Min	8	-1.7	-3.0	-33.9	-9.3	-1.2	-0.0
				449	-2.3	-2.0	2.8	-6.8	-3.2	0.0
				505	-3.8	-2.3	2.9	-0.0	-3.1	0.0
				158	-1.2	-0.5	-1.5	-0.2	1.8	0.0
		RC ENV~2	Max	8	4.0	1.1	-9.9	-3.0	11.9	-0.0
				449	0.3	0.1	10.4	-2.5	-0.4	0.0
				505	0.5	0.3	14.5	1.8	-0.1	0.0
				158	0.3	1.2	3.1	1.5	5.7	0.0
			Min	8	-0.7	-0.2	-24.2	-6.7	2.9	-0.0
				449	-1.6	-1.4	5.0	-4.9	-2.3	0.0
				505	-2.7	-0.8	5.7	0.8	-2.0	0.0
				158	-0.0	-0.2	1.3	1.1	2.8	0.0
8	1	1	SX (RS)	9	2.8	1.1	10.1	2.3	9.1	0.0
				498	0.9	0.9	4.6	1.0	1.6	0.0
				560	1.8	0.9	7.9	0.8	1.7	0.0
				512	0.2	0.8	2.4	0.4	1.4	0.0
			SY (RS)	9	1.4	3.9	11.2	9.6	2.5	0.0
				498	1.2	0.1	2.4	2.1	0.5	0.0
				560	1.2	2.3	8.2	2.2	0.7	0.0
				512	1.3	1.5	5.4	2.1	1.2	0.0
		RC ENV~1	Max	9	3.1	3.7	-3.2	5.7	11.8	0.0
				498	1.0	0.7	11.5	-1.2	1.8	0.0
				560	1.5	2.5	15.3	2.5	2.3	0.0
				512	1.5	1.7	12.8	2.9	6.6	0.0
			Min	9	-2.5	-4.0	-34.8	-13.5	-6.4	-0.0
				498	-1.4	-1.2	0.4	-7.2	-1.3	0.0
				560	-2.0	-2.1	-1.6	-1.8	-1.0	0.0
				512	-1.1	-1.3	0.5	-1.3	0.9	0.0
		RC ENV~2	Max	9	0.9	0.0	-13.6	-3.2	6.0	0.0
				498	0.0	-0.1	8.3	-2.9	0.4	0.0
				560	0.0	0.4	11.0	0.5	1.1	0.0
				512	0.4	0.4	9.2	1.2	4.7	0.0
			Min	9	-0.2	-0.3	-25.0	-6.4	1.1	-0.0
				498	-0.5	-0.5	4.7	-5.2	-0.5	0.0
				560	-0.7	0.1	5.0	-0.4	0.1	0.0
				512	0.2	0.1	5.8	0.5	2.2	0.0
9	1	1	SX (RS)	11	3.0	0.9	7.4	2.0	7.6	0.0
				553	1.3	1.0	3.3	1.0	1.9	0.0
				609	2.0	0.8	6.2	0.8	2.1	0.0
				177	0.2	0.9	2.0	0.4	1.8	0.0
			SY (RS)	11	1.5	3.2	5.3	4.3	1.9	0.0
				553	1.3	0.4	1.9	0.3	0.5	0.0
				609	1.3	2.0	4.3	0.6	0.4	0.0
				177	1.3	0.9	2.4	0.5	0.5	0.0
		RC ENV~1	Max	11	5.7	3.5	-6.2	1.4	15.8	0.0
				553	0.7	0.4	13.2	-0.9	1.2	0.0
				609	1.0	1.8	21.0	0.7	1.4	0.0

					177	1.4	1.8	3.6	0.3	6.9	0.0
				Min	11	-1.7	-2.9	-32.6	-7.3	-1.5	-0.0
					553	-2.4	-2.1	2.6	-4.7	-2.6	0.0
					609	-3.8	-2.2	3.6	-1.0	-2.7	0.0
					177	-1.2	-0.4	-1.2	-0.8	1.5	0.0
			RC ENV~2	Max	11	4.0	1.0	-9.3	-1.5	11.4	0.0
					553	0.3	0.1	9.5	-1.1	0.2	0.0
					609	0.4	0.3	15.3	0.3	0.5	0.0
					177	0.3	1.3	2.2	-0.2	5.1	0.0
				Min	11	-0.7	-0.3	-23.5	-5.2	2.4	0.0
					553	-1.6	-1.4	4.5	-3.4	-1.7	0.0
					609	-2.6	-0.8	6.2	-0.7	-1.4	0.0
					177	-0.0	-0.1	1.1	-0.3	2.3	0.0
10	1	1	SX (RS)		12	2.6	0.8	9.9	2.4	9.1	0.0
					602	1.1	0.7	4.4	1.0	1.5	0.0
					657	1.5	0.7	8.2	0.8	1.7	0.0
					616	0.1	0.6	2.7	0.4	1.4	0.0
			SY (RS)		12	1.5	3.8	9.1	8.2	1.9	0.0
					602	1.0	0.3	2.9	0.8	0.6	0.0
					657	1.3	2.2	7.3	1.3	0.6	0.0
					616	1.2	1.4	4.7	1.2	0.7	0.0
			RC ENV~1	Max	12	2.7	3.5	-4.5	5.3	11.3	0.0
					602	0.9	0.5	12.7	-1.7	1.6	0.0
					657	1.3	2.5	13.7	0.8	2.5	0.0
					616	1.4	1.7	15.6	1.7	6.8	0.0
				Min	12	-2.4	-4.1	-34.6	-11.1	-7.0	-0.0
					602	-1.4	-0.9	0.5	-7.2	-2.3	0.0
					657	-1.7	-1.9	-2.7	-1.8	-1.0	0.0
					616	-0.9	-1.2	2.5	-1.1	0.7	0.0
			RC ENV~2	Max	12	0.8	-0.2	-13.2	-2.3	5.4	0.0
					602	-0.0	-0.1	9.0	-2.6	0.2	0.0
					657	0.2	0.6	8.1	-0.0	0.8	0.0
					616	0.5	0.5	11.2	1.1	4.7	0.0
				Min	12	-0.3	-0.6	-24.8	-5.3	0.6	-0.0
					602	-0.6	-0.5	4.7	-5.1	-1.4	0.0
					657	-0.6	0.2	1.7	-0.6	0.0	0.0
					616	0.2	0.1	7.2	0.0	2.0	0.0
25	1	1	SX (RS)		20	0.1	0.6	1.4	1.0	0.1	0.0
					31	0.4	0.3	2.9	0.9	0.3	0.0
					33	0.0	0.5	1.4	0.5	0.6	0.0
					32	0.3	0.4	0.4	0.4	0.1	0.0
			SY (RS)		20	0.0	0.3	1.2	0.4	0.0	0.0
					31	0.1	0.3	1.8	1.0	0.1	0.0
					33	0.0	0.5	2.5	0.2	0.3	0.0
					32	0.1	0.1	0.6	0.1	0.1	0.0
			RC ENV~1	Max	20	0.1	0.4	2.7	0.4	0.1	0.0
					31	0.3	0.1	2.8	0.5	0.0	0.0
					33	0.1	0.8	2.9	1.0	0.2	0.0
					32	0.4	0.5	2.5	0.8	0.1	0.0
				Min	20	-0.1	-0.9	-0.0	-1.5	-0.2	0.0
					31	-0.4	-0.5	-3.1	-1.6	-0.6	0.0
					33	-0.0	-0.2	-2.1	-0.0	-1.0	0.0
					32	-0.2	-0.2	1.1	-0.1	-0.2	0.0
			RC ENV~2	Max	20	0.0	-0.0	1.8	-0.3	-0.0	0.0
					31	0.1	-0.1	0.9	-0.2	-0.2	0.0
					33	0.0	0.6	1.0	0.7	-0.2	0.0

					32	0.2	0.3	1.9	0.5	-0.0	0.0
				Min	20	-0.1	-0.6	0.8	-0.9	-0.1	0.0
					31	-0.3	-0.4	-1.0	-0.8	-0.4	0.0
					33	0.0	0.1	-0.2	0.3	-0.6	0.0
					32	-0.0	0.0	1.5	0.2	-0.1	0.0
26	1	1	SX (RS)		14	3.1	0.9	5.0	1.0	5.6	0.0
					51	1.5	0.9	2.7	0.4	1.8	0.0
					58	2.0	0.7	3.2	0.3	1.7	0.0
					34	0.4	0.7	0.9	0.2	1.4	0.0
			SY (RS)		14	1.1	2.1	4.9	3.7	1.4	0.0
					51	0.6	0.5	1.0	0.3	0.3	0.0
					58	1.0	1.2	4.2	0.5	0.5	0.0
					34	0.8	0.4	1.6	0.2	0.6	0.0
			RC ENV~1	Max	14	3.1	2.6	-3.1	1.0	7.5	0.0
					51	1.9	0.8	5.0	-1.8	1.3	0.0
					58	2.0	1.0	9.5	0.6	1.6	0.0
					34	0.4	0.5	6.8	0.5	3.2	0.0
				Min	14	-3.2	-1.6	-16.3	-6.4	-3.7	-0.0
					51	-1.1	-1.0	-0.8	-3.4	-2.3	0.0
					58	-2.0	-1.4	0.7	-0.5	-1.9	0.0
					34	-1.1	-0.8	3.0	0.1	0.4	0.0
			RC ENV~2	Max	14	1.2	1.1	-5.8	-1.9	4.0	0.0
					51	1.2	0.3	3.6	-1.9	0.4	0.0
					58	1.0	0.2	7.0	0.1	0.9	0.0
					34	-0.2	0.1	5.1	0.4	2.4	0.0
				Min	14	-1.6	-0.0	-11.9	-3.8	-0.6	0.0
					51	-0.2	-0.5	1.3	-2.6	-0.9	0.0
					58	-0.8	-0.6	3.1	-0.2	-0.4	0.0
					34	-0.6	-0.5	4.5	0.3	0.9	0.0
27	1	1	SX (RS)		15	1.4	0.4	4.3	0.8	3.5	0.0
					73	0.7	0.4	2.3	0.4	0.6	0.0
					80	0.7	0.3	2.9	0.2	0.6	0.0
					65	0.1	0.3	0.9	0.1	0.6	0.0
			SY (RS)		15	1.0	2.5	10.8	7.5	3.2	0.0
					73	1.3	0.6	1.1	1.1	0.3	0.0
					80	0.9	1.4	7.8	1.0	1.3	0.0
					65	1.5	0.6	4.1	0.8	2.0	0.0
			RC ENV~1	Max	15	1.5	3.0	0.3	3.8	6.1	0.0
					73	1.5	0.4	6.3	-0.9	1.2	0.0
					80	0.8	1.2	14.7	1.4	1.5	0.0
					65	1.3	0.5	8.5	1.1	4.3	0.0
				Min	15	-1.2	-2.1	-21.3	-11.1	-0.9	-0.0
					73	-1.1	-0.7	1.4	-3.7	-1.5	0.0
					80	-1.1	-1.6	-0.8	-0.5	-1.2	0.0
					65	-1.8	-0.7	-0.9	-0.5	-0.3	0.0
			RC ENV~2	Max	15	0.6	0.8	-8.8	-3.2	4.2	0.0
					73	0.5	-0.0	4.7	-2.0	0.7	0.0
					80	0.2	-0.1	7.8	0.5	0.3	0.0
					65	-0.2	-0.0	6.0	0.7	3.0	0.0
				Min	15	-0.3	0.3	-14.5	-4.8	1.4	-0.0
					73	0.0	-0.3	2.8	-2.7	-0.8	0.0
					80	-0.4	-0.4	4.1	0.2	-0.7	0.0
					65	-0.4	-0.2	3.2	0.3	1.7	0.0
28	1	1	SX (RS)		16	2.2	0.8	7.7	1.5	4.9	0.0
					36	0.7	0.8	3.6	1.2	0.6	0.0
					38	1.0	0.7	4.2	0.4	0.4	0.0

					37	0.4	0.6	0.4	0.1	0.6	0.0
				SY (RS)	16	0.7	1.8	5.4	3.5	1.1	0.0
					36	0.5	0.3	0.1	0.4	0.1	0.0
					38	0.6	0.9	3.0	0.3	0.3	0.0
					37	0.6	0.6	2.4	0.4	0.8	0.0
			RC ENV~1	Max	16	2.6	2.4	-2.2	0.4	7.8	0.0
					36	0.9	0.5	8.7	-0.8	0.2	0.0
					38	0.7	0.5	12.3	0.6	0.0	0.0
					37	0.3	0.6	6.1	0.8	5.1	0.0
				Min	16	-1.7	-1.1	-21.4	-6.5	-2.0	-0.0
					36	-0.6	-1.0	0.1	-4.0	-1.2	0.0
					38	-1.4	-1.2	1.6	-0.2	-0.9	0.0
					37	-0.9	-0.7	1.3	-0.1	1.6	0.0
			RC ENV~2	Max	16	1.5	1.2	-9.5	-3.0	5.5	-0.0
					36	0.5	-0.0	6.2	-1.9	-0.4	0.0
					38	0.1	-0.1	8.9	0.4	-0.3	0.0
					37	-0.2	0.2	4.5	0.5	3.6	0.0
				Min	16	-0.3	0.4	-15.4	-4.3	2.2	-0.0
					36	-0.2	-0.7	3.5	-2.9	-0.8	0.0
					38	-0.8	-0.7	5.6	0.1	-0.6	0.0
					37	-0.6	-0.3	3.1	0.3	2.4	0.0
29	1	1		SX (RS)	1	0.1	0.0	0.2	0.0	0.0	0.0
					41	0.3	0.2	1.2	0.1	0.2	0.0
					43	0.2	0.2	1.5	0.4	0.2	0.0
					42	0.2	0.4	0.3	0.5	0.1	0.0
				SY (RS)	1	0.0	0.1	0.1	0.0	0.0	0.0
					41	0.3	0.1	0.1	0.1	0.3	0.0
					43	0.2	0.2	1.0	0.1	0.3	0.0
					42	0.1	0.2	0.8	0.1	0.1	0.0
			RC ENV~1	Max	1	0.1	0.1	2.2	0.0	0.0	0.0
					41	0.5	0.1	2.8	-0.1	-0.3	0.0
					43	0.1	0.1	0.0	0.8	-0.1	0.0
					42	0.1	0.5	2.9	1.2	0.3	0.0
				Min	1	-0.1	-0.1	1.4	0.0	0.0	0.0
					41	-0.1	-0.3	0.3	-0.3	-1.2	0.0
					43	-0.3	-0.3	-3.4	-0.0	-0.8	0.0
					42	-0.3	-0.2	0.9	0.1	-0.0	0.0
			RC ENV~2	Max	1	0.0	0.0	1.7	0.0	0.0	0.0
					41	0.3	-0.0	2.1	-0.1	-0.6	0.0
					43	0.0	0.0	-1.4	0.6	-0.4	0.0
					42	-0.0	0.3	2.1	0.8	0.2	0.0
				Min	1	-0.0	0.0	1.6	0.0	0.0	0.0
					41	0.0	-0.2	1.3	-0.2	-0.9	0.0
					43	-0.2	-0.2	-2.5	0.3	-0.6	0.0
					42	-0.2	0.0	1.6	0.6	0.1	0.0
30	1	1		SX (RS)	28	0.3	0.1	1.6	0.0	0.6	0.0
					94	0.4	0.1	1.4	0.1	1.4	0.0
					101	0.1	0.0	3.3	0.2	1.5	0.0
					44	0.3	0.1	3.0	0.1	0.5	0.0
				SY (RS)	28	0.5	0.0	0.8	0.1	0.7	0.0
					94	0.1	0.3	1.8	0.1	0.3	0.0
					101	0.4	0.1	0.8	0.2	0.1	0.0
					44	0.0	0.4	1.6	0.4	0.8	0.0
			RC ENV~1	Max	28	0.2	0.1	2.7	0.2	2.3	0.0
					94	0.6	0.4	5.0	0.2	0.7	0.0

					101	0.7	0.1	4.2	0.9	0.7	0.0
					44	0.2	0.3	1.8	0.9	2.4	0.0
				Min	28	-0.8	-0.1	-0.6	-0.0	0.5	0.0
					94	-0.3	-0.3	0.7	-0.1	-2.0	0.0
					101	-0.2	-0.0	-2.4	0.3	-2.3	0.0
					44	-0.4	-0.5	-4.2	0.0	0.5	0.0
			RC ENV~2	Max	28	-0.2	0.0	1.4	0.1	1.7	0.0
					94	0.3	0.2	3.6	0.1	-0.2	0.0
					101	0.4	0.0	2.0	0.7	-0.3	0.0
					44	-0.0	-0.1	-0.4	0.6	1.8	0.0
				Min	28	-0.5	-0.0	0.3	0.1	0.9	0.0
					94	0.0	0.0	2.5	0.0	-1.3	0.0
					101	0.2	0.0	-0.2	0.5	-1.4	0.0
					44	-0.2	-0.2	-2.4	0.5	1.3	0.0
31	1	1	SX (RS)		29	0.1	0.1	0.6	0.0	0.0	0.0
					116	0.1	0.1	0.3	0.0	0.3	0.0
					123	0.1	0.1	2.0	0.1	0.4	0.0
					108	0.2	0.0	1.7	0.0	0.6	0.0
			SY (RS)		29	1.6	0.1	0.2	0.0	2.0	0.0
					116	1.3	0.4	2.5	0.0	1.2	0.0
					123	1.4	0.1	1.2	0.7	0.9	0.0
					108	1.1	0.5	3.8	0.8	2.1	0.0
			RC ENV~1	Max	29	1.4	0.1	2.0	0.1	3.3	0.0
					116	1.4	0.5	5.3	0.1	0.6	0.0
					123	1.6	0.1	3.3	1.5	0.2	0.0
					108	1.0	0.4	1.6	1.4	3.5	0.0
				Min	29	-1.8	-0.1	0.8	-0.0	-0.7	0.0
					116	-1.2	-0.3	0.4	0.0	-1.7	0.0
					123	-1.3	-0.1	-0.6	0.0	-1.7	0.0
					108	-1.2	-0.6	-5.9	-0.2	-0.7	0.0
			RC ENV~2	Max	29	-0.2	0.0	1.5	0.0	1.9	0.0
					116	0.2	0.1	3.5	0.1	-0.4	0.0
					123	0.3	0.0	2.0	1.0	-0.6	0.0
					108	-0.1	-0.1	-1.8	0.7	2.1	0.0
				Min	29	-0.4	-0.0	1.0	0.0	1.3	0.0
					116	0.1	0.0	2.8	0.1	-0.9	0.0
					123	0.1	0.0	0.8	0.7	-1.2	0.0
					108	-0.2	-0.2	-3.3	0.6	1.3	0.0
32	1	1	SX (RS)		30	0.4	0.1	1.9	0.0	0.6	0.0
					46	0.2	0.2	0.9	0.1	0.2	0.0
					48	0.6	0.0	3.6	0.4	0.4	0.0
					47	0.4	0.1	2.6	0.1	1.5	0.0
			SY (RS)		30	0.5	0.1	1.0	0.1	0.7	0.0
					46	0.3	0.2	0.2	0.1	0.3	0.0
					48	0.4	0.0	1.0	0.4	0.3	0.0
					47	0.2	0.3	2.1	0.2	0.6	0.0
			RC ENV~1	Max	30	0.2	0.1	3.9	0.0	2.2	0.0
					46	0.5	0.3	2.6	0.3	-0.3	0.0
					48	0.9	0.1	4.9	1.3	-0.5	0.0
					47	0.3	0.2	1.0	0.6	2.6	0.0
				Min	30	-0.8	-0.1	0.1	-0.1	0.5	0.0
					46	-0.1	-0.2	0.7	0.0	-1.1	0.0
					48	-0.4	-0.0	-2.2	0.2	-1.7	0.0
					47	-0.6	-0.4	-4.2	0.1	-0.5	0.0
			RC ENV~2	Max	30	-0.1	0.0	2.9	-0.0	1.6	0.0
					46	0.3	0.2	2.0	0.2	-0.6	0.0

					48	0.5	0.0	2.6	1.0	-0.9	0.0
					47	0.0	-0.1	-0.7	0.4	1.8	0.0
				Min	30	-0.5	-0.0	1.5	-0.1	0.9	0.0
					46	0.1	0.0	1.2	0.1	-0.8	0.0
					48	0.0	0.0	0.1	0.6	-1.2	0.0
					47	-0.3	-0.2	-2.9	0.3	0.6	0.0
33	1	1	SX (RS)		17	0.0	0.6	1.1	1.0	0.1	0.0
					45	0.5	0.1	2.0	1.2	0.5	0.0
					138	0.1	0.6	0.8	0.1	0.3	0.0
					137	0.4	0.2	2.5	0.5	0.1	0.0
			SY (RS)		17	0.0	0.2	1.1	0.4	0.0	0.0
					45	0.0	0.2	2.2	0.3	0.0	0.0
					138	0.0	0.1	2.4	1.0	0.1	0.0
					137	0.1	0.3	0.9	0.9	0.0	0.0
			RC ENV~1	Max	17	0.1	0.4	2.3	-0.1	0.1	0.0
					45	0.5	-0.0	1.5	-0.2	0.1	0.0
					138	0.1	0.8	3.0	2.0	-0.2	0.0
					137	0.4	0.6	4.6	1.8	0.1	0.0
				Min	17	-0.0	-0.9	0.1	-2.0	-0.2	0.0
					45	-0.5	-0.4	-2.9	-2.6	-1.0	0.0
					138	-0.1	-0.4	-1.8	-0.0	-0.8	0.0
					137	-0.4	-0.0	-0.5	-0.1	-0.2	0.0
			RC ENV~2	Max	17	0.0	-0.0	1.2	-0.9	-0.1	0.0
					45	0.2	-0.2	-0.3	-1.2	-0.4	0.0
					138	0.0	0.5	0.8	1.1	-0.4	0.0
					137	0.2	0.4	3.3	1.1	0.0	0.0
				Min	17	0.0	-0.6	0.5	-1.5	-0.1	0.0
					45	-0.2	-0.3	-1.5	-1.9	-0.7	0.0
					138	-0.0	-0.0	0.4	0.9	-0.6	0.0
					137	-0.2	0.3	1.8	0.8	-0.0	0.0
34	1	1	SX (RS)		18	0.0	0.8	0.8	0.9	0.1	0.0
					155	0.4	0.5	3.0	0.9	0.5	0.0
					157	0.0	0.7	1.3	0.4	0.5	0.0
					156	0.3	0.6	1.5	0.4	0.1	0.0
			SY (RS)		18	0.1	0.6	1.0	0.7	0.1	0.0
					155	0.2	0.4	2.5	0.7	0.3	0.0
					157	0.1	0.5	2.9	1.0	0.2	0.0
					156	0.1	0.4	1.2	1.0	0.1	0.0
			RC ENV~1	Max	18	0.1	1.0	2.5	-0.3	0.1	0.0
					155	0.7	0.5	3.1	-0.3	0.2	0.0
					157	0.1	0.6	2.9	2.5	0.0	0.0
					156	0.2	0.6	4.2	2.0	0.1	0.0
				Min	18	-0.1	-0.6	0.4	-2.2	-0.2	0.0
					155	-0.3	-0.6	-2.9	-2.5	-0.8	0.0
					157	-0.2	-0.8	-2.9	0.4	-1.0	0.0
					156	-0.6	-0.6	0.0	0.1	-0.2	0.0
			RC ENV~2	Max	18	0.0	0.6	1.5	-1.2	-0.0	0.0
					155	0.5	0.1	1.5	-1.2	-0.1	0.0
					157	-0.0	0.2	0.2	1.8	-0.3	0.0
					156	0.1	0.1	3.0	1.4	0.0	0.0
				Min	18	-0.0	-0.2	0.5	-1.6	-0.1	0.0
					155	-0.1	-0.1	-0.8	-1.8	-0.5	0.0
					157	-0.1	-0.5	-0.9	1.2	-0.6	0.0
					156	-0.4	-0.2	1.4	1.1	-0.1	0.0
35	1	1	SX (RS)		19	0.1	0.8	0.9	0.9	0.1	0.0
					174	0.4	0.5	2.8	1.1	0.6	0.0

					176	0.0	0.7	1.2	0.2	0.5	0.0
					175	0.3	0.6	2.0	0.4	0.1	0.0
				SY (RS)	19	0.1	0.6	1.1	0.7	0.1	0.0
					174	0.1	0.6	2.8	1.3	0.1	0.0
					176	0.1	0.5	2.9	0.5	0.3	0.0
					175	0.1	0.5	0.6	0.4	0.1	0.0
			RC ENV~1	Max	19	0.1	1.0	2.3	0.6	0.1	0.0
					174	0.7	0.6	2.8	1.1	0.4	0.0
					176	0.1	0.5	3.3	0.7	0.0	0.0
					175	0.2	0.5	4.1	0.4	0.1	0.0
				Min	19	-0.1	-0.6	-0.4	-1.1	-0.2	0.0
					174	-0.3	-0.5	-2.8	-1.5	-0.8	0.0
					176	-0.1	-0.9	-2.5	-0.4	-0.9	0.0
					175	-0.6	-0.7	-0.5	-0.4	-0.2	0.0
			RC ENV~2	Max	19	0.0	0.7	1.3	0.0	0.0	0.0
					174	0.5	0.1	1.4	-0.0	0.0	0.0
					176	-0.0	0.1	0.6	0.5	-0.2	0.0
					175	0.1	0.1	2.9	0.0	0.1	0.0
				Min	19	-0.0	-0.1	-0.1	-0.4	-0.1	0.0
					174	-0.1	-0.1	-0.7	-0.4	-0.4	0.0
					176	-0.1	-0.6	-0.3	-0.2	-0.5	0.0
					175	-0.4	-0.3	1.3	-0.2	-0.1	0.0
36	1	1		SX (RS)	7	2.5	1.4	6.7	2.2	5.1	0.0
					50	0.3	0.9	1.9	0.9	0.2	0.0
					194	1.4	1.1	6.0	0.8	0.7	0.0
					193	0.7	0.7	1.3	0.3	0.3	0.0
				SY (RS)	7	0.6	2.3	3.6	4.0	0.7	0.0
					50	0.5	0.3	0.8	0.9	0.2	0.0
					194	0.5	1.4	2.3	1.3	0.2	0.0
					193	0.7	1.2	2.0	1.3	0.3	0.0
			RC ENV~1	Max	7	2.5	1.4	0.7	2.5	7.6	0.0
					50	0.3	0.6	6.9	-0.8	-0.1	0.0
					194	1.5	1.9	10.5	2.0	0.5	0.0
					193	0.9	1.8	2.1	2.2	3.7	0.0
				Min	7	-2.5	-3.2	-13.3	-5.4	-2.6	-0.0
					50	-0.8	-1.2	2.7	-3.1	-0.6	0.0
					194	-1.4	-0.8	-1.6	-0.6	-0.9	0.0
					193	-0.5	-0.6	-1.9	-0.5	2.0	0.0
			RC ENV~2	Max	7	1.0	-0.2	-5.3	-1.2	4.6	0.0
					50	-0.1	0.1	5.2	-1.7	-0.3	0.0
					194	0.7	1.1	7.3	1.0	-0.1	0.0
					193	0.5	1.0	1.2	0.9	2.8	0.0
				Min	7	-1.0	-1.6	-9.5	-2.5	1.2	0.0
					50	-0.4	-0.7	4.1	-2.3	-0.4	0.0
					194	-0.5	-0.0	3.3	0.4	-0.5	0.0
					193	-0.1	0.3	0.0	0.6	2.3	0.0
37	1	1		SX (RS)	10	2.3	1.2	7.5	1.7	6.1	0.0
					211	0.5	0.9	3.1	0.8	0.6	0.0
					213	1.3	1.1	6.0	0.5	0.7	0.0
					212	0.6	0.8	1.7	0.6	0.4	0.0
				SY (RS)	10	1.1	2.7	6.0	5.2	2.1	0.0
					211	0.6	0.6	1.1	1.3	0.2	0.0
					213	0.8	1.5	4.4	1.4	0.5	0.0
					212	0.8	1.5	3.0	1.3	0.6	0.0
			RC ENV~1	Max	10	1.5	2.2	0.7	3.1	6.7	0.0

					211	0.7	1.1	6.3	-0.8	0.3	0.0
					213	1.8	1.9	9.7	1.8	0.6	0.0
					212	1.0	1.3	8.0	2.3	4.7	0.0
				Min	10	-3.2	-3.2	-14.3	-7.3	-5.5	-0.0
					211	-0.4	-0.7	0.1	-3.4	-0.8	0.0
					213	-0.8	-1.0	-2.4	-1.0	-0.7	0.0
					212	-0.5	-1.7	0.1	-0.3	2.2	0.0
			RC ENV~2	Max	10	0.1	0.1	-6.6	-1.9	2.4	0.0
					211	0.5	0.7	3.8	-1.7	-0.0	0.0
					213	1.2	1.0	5.7	0.4	0.2	0.0
					212	0.6	-0.0	5.7	1.1	3.5	0.0
				Min	10	-2.3	-1.1	-9.6	-2.7	-1.3	0.0
					211	-0.0	-0.0	2.5	-2.6	-0.3	0.0
					213	-0.1	-0.1	2.8	-0.2	-0.3	0.0
					212	0.0	-0.6	2.5	0.1	2.7	0.0
38	1	1	SX (RS)		13	2.3	1.1	7.2	1.7	6.2	0.0
					230	0.5	0.9	3.0	0.6	0.5	0.0
					232	1.3	1.0	6.1	0.7	0.7	0.0
					231	0.5	0.7	2.1	0.5	0.3	0.0
			SY (RS)		13	0.9	2.6	5.5	4.2	1.8	0.0
					230	0.6	0.4	1.6	0.6	0.4	0.0
					232	0.7	1.4	3.7	0.6	0.3	0.0
					231	0.7	1.4	2.7	0.6	0.5	0.0
			RC ENV~1	Max	13	1.4	2.0	0.5	2.3	6.8	0.0
					230	0.7	1.1	6.3	-1.3	0.2	0.0
					232	1.8	1.9	9.8	1.0	0.7	0.0
					231	1.0	1.3	6.3	1.9	4.9	0.0
				Min	13	-3.3	-3.3	-13.8	-6.2	-5.5	-0.0
					230	-0.5	-0.7	0.3	-3.6	-0.8	0.0
					232	-0.8	-0.9	-2.5	-0.4	-0.8	0.0
					231	-0.4	-1.5	0.2	0.3	2.3	0.0
			RC ENV~2	Max	13	0.1	-0.1	-5.9	-1.9	2.7	-0.0
					230	0.4	0.7	4.5	-1.8	-0.1	0.0
					232	1.3	1.2	5.8	0.6	0.2	0.0
					231	0.7	0.1	4.6	1.4	3.6	0.0
				Min	13	-2.3	-1.4	-9.2	-2.6	-1.0	-0.0
					230	-0.1	-0.0	3.0	-2.6	-0.4	0.0
					232	-0.1	0.1	2.9	0.3	-0.4	0.0
					231	0.1	-0.4	0.9	0.7	2.7	0.0
39	1	1	SX (RS)		31	0.7	0.7	3.6	1.2	0.6	0.0
					14	2.2	0.8	7.7	1.5	4.9	0.0
					34	0.4	0.6	0.4	0.1	0.6	0.0
					33	1.0	0.7	4.2	0.4	0.4	0.0
			SY (RS)		31	0.5	0.3	0.1	0.4	0.1	0.0
					14	0.7	1.8	5.4	3.4	1.1	0.0
					34	0.6	0.6	2.4	0.4	0.8	0.0
					33	0.6	0.9	3.0	0.3	0.3	0.0
			RC ENV~1	Max	31	0.6	0.5	6.4	-0.4	0.8	0.0
					14	1.7	2.4	-0.1	0.8	2.6	0.0
					34	0.9	0.6	5.8	0.6	-0.9	0.0
					33	1.3	0.6	9.4	0.6	0.6	0.0
				Min	31	-0.8	-1.0	-0.8	-2.7	-0.5	0.0
					14	-2.6	-1.1	-15.5	-6.1	-7.2	-0.0
					34	-0.3	-0.7	0.7	-0.3	-2.7	0.0
					33	-0.7	-1.2	1.0	-0.2	-0.2	0.0
			RC ENV~2	Max	31	0.3	0.0	3.9	-1.3	0.3	0.0

					14	0.4	1.2	-6.1	-2.4	-0.9	0.0
					34	0.6	0.3	4.3	0.3	-1.3	0.0
					33	0.8	-0.1	6.8	0.3	0.3	0.0
				Min	31	-0.5	-0.7	1.8	-2.0	-0.1	0.0
					14	-1.6	0.4	-11.2	-3.6	-4.1	0.0
					34	0.2	-0.3	2.7	0.0	-2.0	0.0
					33	-0.1	-0.7	4.2	0.1	0.1	0.0
40	1	1	SX (RS)		32	0.2	0.4	0.3	0.4	0.1	0.0
					33	0.2	0.2	1.5	0.4	0.2	0.0
					35	0.3	0.2	1.2	0.1	0.2	0.0
					4	0.1	0.0	0.2	0.0	0.0	0.0
			SY (RS)		32	0.1	0.2	0.8	0.1	0.1	0.0
					33	0.2	0.2	1.0	0.1	0.3	0.0
					35	0.3	0.1	0.1	0.1	0.3	0.0
					4	0.0	0.1	0.1	0.0	0.0	0.0
			RC ENV~1	Max	32	0.1	0.2	2.1	0.1	0.2	0.0
					33	0.1	0.2	0.9	0.2	-0.0	0.0
					35	0.4	0.3	2.3	0.2	-0.1	0.0
					4	0.1	0.1	2.0	0.0	0.0	0.0
				Min	32	-0.3	-0.5	0.5	-0.8	-0.1	0.0
					33	-0.3	-0.1	-2.1	-0.7	-0.6	0.0
					35	-0.2	-0.1	-0.1	-0.0	-0.7	0.0
					4	-0.1	-0.1	1.3	0.0	0.0	0.0
			RC ENV~2	Max	32	-0.0	-0.0	1.5	-0.2	0.1	0.0
					33	0.0	0.2	-0.2	-0.2	-0.2	0.0
					35	0.3	0.2	1.6	0.1	-0.2	0.0
					4	0.0	-0.0	1.5	0.0	0.0	0.0
				Min	32	-0.2	-0.3	1.0	-0.5	0.0	0.0
					33	-0.2	-0.0	-1.2	-0.4	-0.4	0.0
					35	0.0	0.0	0.8	0.0	-0.5	0.0
					4	-0.0	-0.0	1.4	0.0	0.0	0.0
41	1	1	SX (RS)		33	0.6	0.0	3.5	0.4	0.4	0.0
					34	0.4	0.1	2.6	0.1	1.5	0.0
					25	0.4	0.1	1.9	0.0	0.6	0.0
					35	0.2	0.2	0.9	0.1	0.2	0.0
			SY (RS)		33	0.4	0.0	1.0	0.4	0.3	0.0
					34	0.2	0.3	2.1	0.2	0.6	0.0
					25	0.5	0.1	1.0	0.1	0.7	0.0
					35	0.3	0.2	0.2	0.1	0.3	0.0
			RC ENV~1	Max	33	0.4	0.0	4.5	0.0	0.9	0.0
					34	0.6	0.4	1.9	-0.0	0.7	0.0
					25	0.8	0.1	3.0	0.1	-0.1	0.0
					35	0.2	0.2	2.8	0.0	0.7	0.0
				Min	33	-0.9	-0.1	-2.6	-0.8	0.1	0.0
					34	-0.3	-0.2	-3.3	-0.5	-2.3	0.0
					25	-0.3	-0.1	-0.7	-0.1	-1.4	0.0
					35	-0.4	-0.3	0.9	-0.2	0.1	0.0
			RC ENV~2	Max	33	-0.0	-0.0	2.0	-0.3	0.7	0.0
					34	0.4	0.2	0.8	-0.3	-0.0	0.0
					25	0.5	0.0	1.9	-0.0	-0.2	0.0
					35	-0.1	-0.0	2.1	-0.0	0.5	0.0
				Min	33	-0.6	-0.0	-0.6	-0.6	0.4	0.0
					34	-0.0	0.1	-1.7	-0.3	-1.4	0.0
					25	0.2	-0.0	0.7	-0.1	-1.0	0.0
					35	-0.3	-0.2	1.4	-0.1	0.2	0.0
42	1	1	SX (RS)		36	0.4	0.3	2.9	0.9	0.3	0.0

					24	0.1	0.6	1.4	1.0	0.1	0.0
					39	0.3	0.4	0.4	0.4	0.1	0.0
					38	0.0	0.5	1.4	0.5	0.6	0.0
				SY (RS)	36	0.1	0.3	1.8	1.0	0.1	0.0
					24	0.0	0.3	1.2	0.4	0.0	0.0
					39	0.1	0.1	0.6	0.1	0.1	0.0
					38	0.0	0.5	2.5	0.2	0.3	0.0
			RC ENV~1	Max	36	0.5	0.1	2.1	0.4	0.9	0.0
					24	0.1	0.4	4.0	0.1	0.1	0.0
					39	0.2	0.5	3.2	1.0	0.3	0.0
					38	0.0	0.8	3.0	1.5	1.6	0.0
				Min	36	-0.3	-0.5	-3.8	-1.7	0.1	0.0
					24	-0.1	-0.9	0.6	-1.8	-0.2	0.0
					39	-0.4	-0.2	1.0	0.0	-0.0	0.0
					38	-0.1	-0.2	-1.9	0.2	0.1	0.0
			RC ENV~2	Max	36	0.3	-0.1	-0.4	-0.5	0.7	0.0
					24	0.1	-0.0	2.9	-0.7	0.0	0.0
					39	0.0	0.3	2.3	0.7	0.2	0.0
					38	-0.0	0.6	1.0	1.1	1.1	0.0
				Min	36	-0.0	-0.4	-2.4	-1.1	0.4	0.0
					24	-0.0	-0.6	1.8	-1.3	-0.1	0.0
					39	-0.2	0.0	1.6	0.4	0.1	0.0
					38	-0.0	0.1	-0.1	0.7	0.7	0.0
43	1	1		SX (RS)	37	0.4	0.1	2.6	0.1	1.5	0.0
					38	0.6	0.0	3.5	0.4	0.4	0.0
					40	0.2	0.2	0.9	0.1	0.2	0.0
					27	0.4	0.1	1.9	0.0	0.6	0.0
				SY (RS)	37	0.2	0.3	2.1	0.2	0.6	0.0
					38	0.4	0.0	1.0	0.4	0.3	0.0
					40	0.3	0.2	0.2	0.1	0.3	0.0
					27	0.5	0.1	1.0	0.1	0.7	0.0
			RC ENV~1	Max	37	0.3	0.4	1.0	-0.1	3.4	0.0
					38	0.9	0.0	5.1	-0.1	-0.5	0.0
					40	0.5	0.2	4.9	-0.0	-0.3	0.0
					27	0.2	0.1	3.1	0.1	3.3	0.0
				Min	37	-0.6	-0.2	-4.6	-0.5	-0.2	0.0
					38	-0.4	-0.1	-2.0	-1.2	-1.8	0.0
					40	-0.1	-0.3	1.2	-0.2	-1.3	0.0
					27	-0.8	-0.1	-0.6	-0.1	0.6	0.0
			RC ENV~2	Max	37	-0.0	0.2	-1.1	-0.3	2.4	0.0
					38	0.6	-0.0	3.1	-0.5	-0.8	0.0
					40	0.3	-0.0	3.5	-0.1	-0.6	0.0
					27	-0.2	0.0	1.6	0.0	2.3	0.0
				Min	37	-0.4	0.1	-3.3	-0.4	1.1	0.0
					38	0.1	-0.0	0.6	-0.9	-1.3	0.0
					40	0.1	-0.2	2.0	-0.2	-0.9	0.0
					27	-0.5	-0.0	0.0	-0.0	1.3	0.0
44	1	1		SX (RS)	38	0.2	0.2	1.5	0.4	0.2	0.0
					39	0.2	0.4	0.3	0.4	0.1	0.0
					3	0.1	0.0	0.2	0.0	0.0	0.0
					40	0.3	0.2	1.2	0.1	0.2	0.0
				SY (RS)	38	0.2	0.2	1.0	0.1	0.3	0.0
					39	0.1	0.2	0.8	0.1	0.1	0.0
					3	0.0	0.1	0.1	0.0	0.0	0.0
					40	0.3	0.1	0.1	0.1	0.3	0.0

			RC ENV~1	Max	38	0.3	0.2	0.2	0.1	1.1	0.0
					39	0.3	0.2	3.0	-0.0	0.0	0.0
					3	0.1	0.1	3.0	0.0	0.0	0.0
					40	0.2	0.3	2.4	0.2	1.3	0.0
				Min	38	-0.1	-0.1	-3.4	-0.8	0.2	0.0
					39	-0.1	-0.5	0.9	-1.0	-0.3	0.0
					3	-0.1	-0.1	1.5	0.0	0.0	0.0
					40	-0.5	-0.1	0.0	0.0	0.3	0.0
			RC ENV~2	Max	38	0.2	0.2	-1.2	-0.2	0.8	0.0
					39	0.2	-0.0	2.2	-0.4	-0.1	0.0
					3	0.0	-0.0	2.2	0.0	0.0	0.0
					40	-0.1	0.2	1.6	0.2	0.9	0.0
				Min	38	0.0	-0.0	-2.4	-0.5	0.5	0.0
					39	0.0	-0.3	1.7	-0.7	-0.2	0.0
					3	-0.0	-0.0	1.7	0.0	0.0	0.0
					40	-0.3	0.0	0.7	0.1	0.6	0.0
45	1	1	SX (RS)		41	0.2	0.2	0.9	0.1	0.2	0.0
					28	0.4	0.1	1.9	0.0	0.6	0.0
					44	0.4	0.1	2.6	0.1	1.5	0.0
					43	0.6	0.0	3.6	0.4	0.4	0.0
			SY (RS)		41	0.3	0.2	0.2	0.1	0.3	0.0
					28	0.5	0.1	1.0	0.1	0.7	0.0
					44	0.2	0.3	2.1	0.2	0.6	0.0
					43	0.4	0.0	1.0	0.4	0.3	0.0
			RC ENV~1	Max	41	0.1	0.3	2.5	0.3	1.2	0.0
					28	0.8	0.1	4.2	0.0	-0.5	0.0
					44	0.6	0.2	0.9	0.6	0.4	0.0
					43	0.3	0.1	4.9	1.4	1.7	0.0
				Min	41	-0.5	-0.2	0.7	0.1	0.3	0.0
					28	-0.2	-0.1	0.2	-0.2	-2.3	0.0
					44	-0.3	-0.4	-4.7	0.1	-2.6	0.0
					43	-0.9	-0.0	-2.2	0.3	0.5	0.0
			RC ENV~2	Max	41	-0.1	0.2	1.9	0.2	0.9	0.0
					28	0.5	0.0	3.0	-0.1	-0.9	0.0
					44	0.4	-0.1	-0.8	0.4	-0.6	0.0
					43	-0.0	0.0	2.7	1.0	1.2	0.0
				Min	41	-0.3	0.0	1.2	0.1	0.6	0.0
					28	0.2	-0.0	1.8	-0.1	-1.7	0.0
					44	-0.0	-0.2	-3.3	0.3	-1.9	0.0
					43	-0.6	0.0	0.1	0.7	0.9	0.0
46	1	1	SX (RS)		42	0.3	0.4	0.4	0.5	0.1	0.0
					43	0.0	0.5	1.4	0.5	0.6	0.0
					45	0.4	0.3	3.0	0.9	0.3	0.0
					17	0.1	0.6	1.4	1.0	0.1	0.0
			SY (RS)		42	0.1	0.2	0.6	0.1	0.1	0.0
					43	0.0	0.5	2.5	0.2	0.3	0.0
					45	0.1	0.3	1.8	1.0	0.1	0.0
					17	0.0	0.3	1.2	0.4	0.0	0.0
			RC ENV~1	Max	42	0.4	0.2	2.2	-0.1	0.0	0.0
					43	0.1	0.2	3.3	-0.4	-0.1	0.0
					45	0.3	0.5	1.9	1.9	-0.0	0.0
					17	0.1	0.9	4.0	2.0	0.2	0.0
				Min	42	-0.2	-0.5	1.0	-1.2	-0.3	0.0
					43	-0.0	-0.8	-1.7	-1.7	-1.4	0.0
					45	-0.5	-0.1	-4.0	-0.2	-0.6	0.0
					17	-0.1	-0.4	0.6	0.1	-0.1	0.0

			RC ENV~2	Max	42	0.2	-0.0	1.7	-0.6	-0.1	0.0
					43	0.0	-0.1	1.4	-0.9	-0.7	0.0
					45	0.1	0.4	-0.4	1.2	-0.2	0.0
					17	0.0	0.6	2.9	1.5	0.1	0.0
				Min	42	-0.0	-0.3	1.3	-0.8	-0.2	0.0
					43	0.0	-0.6	0.2	-1.3	-1.0	0.0
					45	-0.3	0.1	-2.2	0.6	-0.4	0.0
					17	-0.1	0.0	2.0	0.9	0.1	0.0
47	1	1	SX (RS)		43	1.0	0.7	4.2	0.4	0.4	0.0
					44	0.4	0.6	0.4	0.1	0.6	0.0
					5	2.2	0.8	7.7	1.5	4.9	0.0
					45	0.7	0.8	3.6	1.2	0.6	0.0
			SY (RS)		43	0.6	0.9	3.0	0.3	0.3	0.0
					44	0.6	0.6	2.4	0.4	0.8	0.0
					5	0.7	1.8	5.4	3.4	1.1	0.0
					45	0.5	0.3	0.1	0.4	0.1	0.0
			RC ENV~1	Max	43	1.4	1.3	10.3	0.1	0.6	0.0
					44	0.9	0.7	8.1	-0.1	-1.5	0.0
					5	1.7	1.0	-2.6	6.8	2.2	0.0
					45	0.6	1.1	7.1	4.2	1.0	0.0
				Min	43	-0.7	-0.5	1.5	-0.6	-0.1	0.0
					44	-0.2	-0.6	2.0	-1.0	-4.2	0.0
					5	-2.7	-2.5	-20.3	-0.1	-7.6	-0.0
					45	-0.9	-0.5	-0.2	1.1	-0.2	0.0
			RC ENV~2	Max	43	0.8	0.7	7.6	-0.1	0.4	0.0
					44	0.6	0.4	5.9	-0.5	-2.3	0.0
					5	0.4	-0.5	-9.7	4.5	-1.5	-0.0
					45	0.2	0.7	5.1	3.1	0.7	0.0
				Min	43	-0.1	0.1	5.0	-0.4	0.2	0.0
					44	0.2	-0.2	4.3	-0.7	-3.1	0.0
					5	-1.5	-1.2	-14.8	3.3	-4.6	-0.0
					45	-0.6	0.0	2.9	2.3	0.3	0.0
48	1	1	SX (RS)		46	0.3	0.2	1.2	0.1	0.2	0.0
					2	0.1	0.0	0.2	0.0	0.0	0.0
					49	0.2	0.4	0.3	0.5	0.1	0.0
					48	0.2	0.2	1.5	0.4	0.2	0.0
			SY (RS)		46	0.3	0.1	0.1	0.1	0.3	0.0
					2	0.0	0.1	0.1	0.0	0.0	0.0
					49	0.1	0.2	0.8	0.1	0.1	0.0
					48	0.2	0.2	1.0	0.1	0.3	0.0
			RC ENV~1	Max	46	0.1	0.1	2.8	-0.0	1.1	0.0
					2	0.1	0.1	2.2	0.0	0.0	0.0
					49	0.3	0.5	2.7	1.1	0.0	0.0
					48	0.3	0.1	0.1	0.8	0.8	0.0
				Min	46	-0.5	-0.3	0.3	-0.3	0.3	0.0
					2	-0.1	-0.1	1.4	0.0	0.0	0.0
					49	-0.1	-0.2	0.8	0.1	-0.3	0.0
					48	-0.1	-0.2	-3.3	-0.0	0.1	0.0
			RC ENV~2	Max	46	-0.0	-0.0	2.0	-0.1	0.8	0.0
					2	0.0	0.0	1.7	0.0	0.0	0.0
					49	0.2	0.3	2.0	0.8	-0.1	0.0
					48	0.2	0.0	-1.2	0.6	0.6	0.0
				Min	46	-0.3	-0.2	1.2	-0.2	0.6	0.0
					2	-0.0	0.0	1.6	0.0	0.0	0.0
					49	0.0	0.0	1.6	0.5	-0.2	0.0
					48	-0.0	-0.1	-2.4	0.3	0.4	0.0

49	1	1	SX (RS)	47	0.4	0.6	0.4	0.1	0.6	0.0
				48	1.0	0.7	4.2	0.4	0.4	0.0
				50	0.7	0.8	3.6	1.2	0.6	0.0
				7	2.2	0.8	7.7	1.5	4.9	0.0
			SY (RS)	47	0.6	0.6	2.4	0.4	0.8	0.0
				48	0.6	0.9	3.0	0.3	0.3	0.0
				50	0.5	0.3	0.1	0.4	0.1	0.0
				7	0.7	1.8	5.4	3.5	1.1	0.0
			RC ENV~1 Max	47	0.3	0.7	7.4	-0.0	4.0	0.0
				48	0.7	1.2	10.1	0.1	0.1	0.0
				50	0.9	1.0	7.2	4.1	0.2	0.0
				7	2.7	1.0	-2.4	6.7	7.6	0.0
			Min	47	-0.9	-0.6	1.9	-0.9	1.5	0.0
				48	-1.4	-0.5	1.5	-0.6	-0.6	0.0
				50	-0.6	-0.5	-0.2	1.1	-1.0	0.0
				7	-1.7	-2.5	-20.1	-0.2	-2.2	-0.0
			RC ENV~2 Max	47	-0.2	0.3	5.5	-0.4	3.0	0.0
				48	0.1	0.7	7.5	-0.1	-0.1	0.0
				50	0.5	0.6	5.2	3.0	-0.3	0.0
				7	1.4	-0.4	-8.8	4.3	4.7	0.0
			Min	47	-0.5	-0.2	4.2	-0.6	2.2	0.0
				48	-0.8	0.1	4.7	-0.4	-0.4	0.0
				50	-0.2	-0.0	2.8	2.1	-0.7	0.0
				7	-0.4	-1.2	-14.7	3.0	1.4	0.0
50	1	1	SX (RS)	48	0.0	0.5	1.4	0.5	0.6	0.0
				49	0.3	0.4	0.4	0.5	0.1	0.0
				21	0.1	0.6	1.4	1.0	0.1	0.0
				50	0.4	0.3	3.0	0.9	0.3	0.0
			SY (RS)	48	0.0	0.5	2.5	0.2	0.3	0.0
				49	0.1	0.2	0.6	0.1	0.1	0.0
				21	0.0	0.3	1.2	0.4	0.0	0.0
				50	0.1	0.3	1.8	1.0	0.1	0.0
			RC ENV~1 Max	48	0.0	0.2	3.2	-0.3	1.4	0.0
				49	0.2	0.2	2.1	-0.1	0.3	0.0
				21	0.1	0.9	4.0	2.0	0.1	0.0
				50	0.5	0.5	2.0	1.8	0.6	0.0
			Min	48	-0.1	-0.8	-1.7	-1.7	0.1	0.0
				49	-0.4	-0.5	1.0	-1.1	-0.0	0.0
				21	-0.1	-0.4	0.6	0.0	-0.2	0.0
				50	-0.3	-0.1	-3.9	-0.3	0.0	0.0
			RC ENV~2 Max	48	-0.0	-0.1	1.4	-0.8	1.0	0.0
				49	0.0	-0.0	1.6	-0.5	0.2	0.0
				21	0.1	0.5	2.9	1.4	-0.0	0.0
				50	0.2	0.4	-0.3	1.2	0.4	0.0
			Min	48	-0.0	-0.6	0.3	-1.2	0.6	0.0
				49	-0.2	-0.3	1.3	-0.8	0.1	0.0
				21	-0.0	0.0	1.8	0.8	-0.1	0.0
				50	-0.1	0.1	-2.2	0.6	0.2	0.0
51	1	1	SX (RS)	51	1.2	0.3	2.6	0.4	1.6	0.0
				52	1.0	0.3	1.1	0.5	1.3	0.0
				59	1.1	0.2	0.7	0.1	1.2	0.0
				58	0.9	0.4	0.9	0.1	1.8	0.0
			SY (RS)	51	0.6	0.1	2.5	0.9	0.3	0.0
				52	0.2	0.5	0.9	0.7	0.4	0.0
				59	0.7	0.2	0.7	0.3	0.4	0.0
				58	0.1	0.7	3.5	0.0	0.1	0.0

			RC ENV~1	Max	51	1.2	0.2	-0.4	-0.1	1.8	0.0
					52	1.2	0.4	4.5	-0.7	1.8	0.0
					59	1.1	0.2	4.3	0.5	2.7	0.0
					58	0.8	0.9	5.1	1.0	2.4	0.0
				Min	51	-1.2	-0.3	-5.8	-1.9	-1.5	0.0
					52	-0.8	-0.7	0.9	-2.1	-1.0	0.0
					59	-1.1	-0.2	2.0	-0.1	-0.4	0.0
					58	-1.1	-0.5	-1.9	0.6	-1.2	0.0
			RC ENV~2	Max	51	0.4	0.1	-2.4	-0.7	0.4	0.0
					52	0.7	0.0	3.2	-1.2	1.2	0.0
					59	0.6	0.1	3.2	0.2	1.8	0.0
					58	0.2	0.5	1.7	0.8	1.0	0.0
				Min	51	-0.6	-0.2	-4.2	-1.0	-0.8	0.0
					52	-0.2	-0.4	2.0	-1.6	0.2	0.0
					59	-0.4	-0.1	2.1	0.0	0.6	0.0
					58	-0.6	-0.0	0.8	0.7	-0.3	0.0
52	1	1	SX (RS)		52	0.7	0.2	1.0	0.2	1.2	0.0
					53	0.7	0.1	0.9	0.3	1.0	0.0
					60	0.7	0.2	0.4	0.1	0.9	0.0
					59	0.7	0.1	0.3	0.3	1.4	0.0
			SY (RS)		52	0.6	0.3	0.9	0.3	0.3	0.0
					53	0.1	0.3	0.9	0.4	0.4	0.0
					60	0.6	0.3	1.0	0.3	0.4	0.0
					59	0.1	0.3	1.1	0.3	0.4	0.0
			RC ENV~1	Max	52	0.7	0.3	-1.2	-0.6	0.6	0.0
					53	0.9	0.2	3.4	-0.8	2.7	0.0
					60	0.7	0.3	3.2	0.5	3.5	0.0
					59	0.6	0.3	3.2	0.8	1.1	0.0
				Min	52	-0.7	-0.2	-4.4	-1.3	-2.5	0.0
					53	-0.6	-0.3	0.4	-1.7	-0.2	0.0
					60	-0.6	-0.3	1.3	-0.2	0.3	0.0
					59	-0.9	-0.2	0.9	0.2	-1.9	0.0
			RC ENV~2	Max	52	0.3	0.1	-2.1	-0.7	-0.5	0.0
					53	0.5	-0.0	2.4	-1.1	1.9	0.0
					60	0.4	0.0	2.5	0.2	2.4	0.0
					59	0.1	0.2	2.4	0.6	-0.2	0.0
				Min	52	-0.4	-0.0	-3.2	-1.0	-1.7	0.0
					53	-0.1	-0.2	1.3	-1.3	0.8	0.0
					60	-0.3	-0.1	1.8	-0.1	1.1	0.0
					59	-0.5	-0.0	1.6	0.4	-1.3	0.0
53	1	1	SX (RS)		53	0.4	0.2	0.8	0.1	0.9	0.0
					54	0.6	0.1	0.7	0.2	0.7	0.0
					61	0.4	0.1	0.4	0.0	0.6	0.0
					60	0.6	0.0	0.3	0.2	1.0	0.0
			SY (RS)		53	0.6	0.2	1.0	0.5	0.4	0.0
					54	0.2	0.2	1.0	0.4	0.4	0.0
					61	0.7	0.2	1.0	0.4	0.5	0.0
					60	0.3	0.2	1.0	0.3	0.5	0.0
			RC ENV~1	Max	53	0.6	0.2	-0.3	-0.4	-0.2	0.0
					54	0.6	0.1	2.5	-0.7	3.0	0.0
					61	0.7	0.2	2.9	0.6	3.8	0.0
					60	0.5	0.2	3.8	0.7	0.2	0.0
				Min	53	-0.6	-0.2	-3.2	-1.3	-3.4	0.0
					54	-0.5	-0.2	-0.3	-1.5	0.4	0.0
					61	-0.6	-0.3	0.8	-0.2	0.7	0.0
					60	-0.7	-0.1	1.1	0.2	-2.7	0.0

			RC ENV~2	Max	53	0.2	0.1	-1.2	-0.6	-1.1	0.0
					54	0.4	-0.0	1.7	-1.0	2.1	0.0
					61	0.3	0.0	1.9	0.2	2.7	0.0
					60	0.1	0.1	2.8	0.5	-0.8	0.0
				Min	53	-0.3	-0.0	-2.3	-0.9	-2.4	0.0
					54	-0.1	-0.1	0.6	-1.1	1.1	0.0
					61	-0.2	-0.0	1.1	-0.1	1.3	0.0
					60	-0.4	0.0	2.1	0.4	-1.9	0.0
54	1	1	SX (RS)		54	0.2	0.1	0.7	0.0	0.6	0.0
					55	0.4	0.1	0.7	0.1	0.4	0.0
					62	0.2	0.1	0.5	0.0	0.3	0.0
					61	0.4	0.1	0.4	0.1	0.7	0.0
			SY (RS)		54	0.7	0.2	0.8	0.6	0.4	0.0
					55	0.4	0.2	1.3	0.3	0.4	0.0
					62	0.7	0.2	1.6	0.4	0.4	0.0
					61	0.5	0.2	1.1	0.2	0.5	0.0
			RC ENV~1	Max	54	0.7	0.2	0.3	-0.4	-0.7	0.0
					55	0.5	0.1	1.4	-0.8	2.7	0.0
					62	0.8	0.2	3.0	0.7	3.5	0.0
					61	0.4	0.2	4.7	0.7	-0.5	0.0
				Min	54	-0.7	-0.2	-2.1	-1.5	-3.7	0.0
					55	-0.4	-0.2	-1.4	-1.6	0.7	0.0
					62	-0.7	-0.2	-0.1	-0.1	0.8	0.0
					61	-0.5	-0.2	1.4	0.2	-3.0	0.0
			RC ENV~2	Max	54	0.1	0.0	-0.4	-0.6	-1.3	0.0
					55	0.2	-0.0	0.9	-1.0	1.9	0.0
					62	0.2	0.0	1.5	0.3	2.4	0.0
					61	0.1	0.1	3.4	0.5	-1.1	0.0
				Min	54	-0.2	-0.0	-1.4	-0.9	-2.6	0.0
					55	-0.1	-0.1	-0.1	-1.2	1.1	0.0
					62	-0.1	0.0	0.4	-0.0	1.2	0.0
					61	-0.2	0.0	2.5	0.4	-2.1	0.0
55	1	1	SX (RS)		55	0.1	0.1	0.8	0.1	0.3	0.0
					56	0.3	0.2	0.8	0.1	0.1	0.0
					63	0.1	0.1	0.5	0.2	0.1	0.0
					62	0.3	0.1	0.5	0.1	0.4	0.0
			SY (RS)		55	0.8	0.3	0.9	0.6	0.4	0.0
					56	0.5	0.2	1.1	0.3	0.6	0.0
					63	0.9	0.3	1.7	0.4	0.3	0.0
					62	0.6	0.3	1.5	0.2	0.5	0.0
			RC ENV~1	Max	55	0.8	0.3	1.3	-0.5	-0.8	0.0
					56	0.5	0.2	-0.0	-0.9	1.7	0.0
					63	0.9	0.4	2.9	0.9	2.4	0.0
					62	0.6	0.3	5.9	0.8	-0.7	0.0
				Min	55	-0.8	-0.4	-0.8	-1.7	-3.4	0.0
					56	-0.5	-0.3	-2.2	-1.8	0.1	0.0
					63	-0.8	-0.3	-0.6	0.1	0.4	0.0
					62	-0.6	-0.2	1.3	0.2	-2.7	0.0
			RC ENV~2	Max	55	-0.0	-0.1	0.5	-0.7	-1.2	0.0
					56	0.1	0.0	-0.3	-1.2	1.2	0.0
					63	0.2	0.1	1.2	0.5	1.7	0.0
					62	0.1	0.0	4.2	0.6	-1.1	0.0
				Min	55	-0.1	-0.1	-0.4	-1.1	-2.4	0.0
					56	-0.1	-0.1	-1.2	-1.4	0.7	0.0
					63	0.0	0.1	-0.2	0.2	0.7	0.0
					62	-0.1	-0.0	2.8	0.4	-1.9	0.0

56	1	1	SX (RS)	56	0.3	0.1	1.0	0.4	0.1	0.0
				57	0.3	0.2	2.1	0.4	0.5	0.0
				64	0.2	0.2	0.2	0.1	0.6	0.0
				63	0.3	0.2	0.9	0.0	0.1	0.0
			SY (RS)	56	0.9	0.6	1.6	0.9	0.3	0.0
				57	0.6	0.1	4.1	1.4	0.9	0.0
				64	0.9	0.9	6.4	0.3	0.8	0.0
				63	0.7	0.1	0.8	0.6	0.5	0.0
			RC ENV~1 Max	56	0.8	0.5	3.3	-0.5	-0.4	0.0
				57	0.5	0.1	1.8	0.1	0.9	0.0
				64	1.0	1.0	7.1	1.3	0.6	0.0
				63	0.7	0.2	7.2	1.1	-0.4	0.0
			Min	56	-0.9	-0.8	0.1	-2.4	-2.4	0.0
				57	-0.6	-0.3	-6.4	-2.7	-0.8	0.0
				64	-0.9	-0.7	-5.7	0.6	-1.1	0.0
				63	-0.6	-0.1	2.3	-0.0	-1.8	0.0
			RC ENV~2 Max	56	-0.1	-0.1	2.3	-1.1	-0.7	0.0
				57	0.0	-0.0	-1.5	-1.3	0.2	0.0
				64	0.1	0.3	0.8	1.0	0.3	0.0
				63	0.1	0.1	5.1	0.7	-0.9	0.0
			Min	56	-0.1	-0.3	1.1	-1.5	-1.6	0.0
				57	-0.1	-0.2	-2.9	-1.6	-0.2	0.0
				64	0.1	0.2	-1.2	0.6	-0.4	0.0
				63	-0.0	0.0	3.1	0.6	-1.3	0.0
57	1	1	SX (RS)	57	0.7	0.4	2.3	0.4	0.6	0.0
				15	1.3	0.4	4.3	0.8	3.5	0.0
				65	0.1	0.3	0.9	0.1	0.6	0.0
				64	0.7	0.3	2.9	0.2	0.6	0.0
			SY (RS)	57	1.3	0.6	1.1	1.1	0.3	0.0
				15	1.0	2.5	10.8	7.5	3.2	0.0
				65	1.5	0.6	4.1	0.8	2.0	0.0
				64	0.9	1.4	7.8	1.0	1.3	0.0
			RC ENV~1 Max	57	1.2	0.4	5.8	-1.7	0.6	0.0
				15	1.1	3.0	-0.3	3.8	1.2	0.0
				65	1.8	0.5	9.4	1.4	0.1	0.0
				64	1.1	1.2	13.8	1.3	1.1	0.0
			Min	57	-1.5	-0.7	0.8	-4.2	-0.8	0.0
				15	-1.5	-2.1	-21.9	-11.2	-6.2	-0.0
				65	-1.3	-0.7	1.2	-0.2	-4.0	0.0
				64	-0.8	-1.6	-1.7	-0.7	-1.4	0.0
			RC ENV~2 Max	57	-0.0	-0.1	4.3	-2.5	0.1	0.0
				15	0.1	0.8	-10.1	-3.6	-1.8	0.0
				65	0.4	0.0	5.5	0.6	-1.9	0.0
				64	0.3	-0.2	9.6	0.6	0.2	0.0
			Min	57	-0.4	-0.3	2.4	-3.2	-0.5	0.0
				15	-0.6	0.4	-15.1	-5.0	-4.4	-0.0
				65	0.2	-0.2	3.0	0.3	-2.9	0.0
				64	-0.0	-0.4	5.9	0.3	-0.3	0.0
58	1	1	SX (RS)	34	0.3	0.1	3.0	0.1	0.5	0.0
				58	0.1	0.0	3.3	0.2	1.5	0.0
				66	0.4	0.1	1.4	0.1	1.4	0.0
				25	0.3	0.1	1.6	0.0	0.6	0.0
			SY (RS)	34	0.0	0.4	1.6	0.4	0.8	0.0
				58	0.4	0.1	0.8	0.2	0.1	0.0
				66	0.1	0.3	1.8	0.1	0.3	0.0
				25	0.5	0.0	0.8	0.1	0.7	0.0

			RC ENV~1	Max	34	0.2	0.5	1.8	0.2	1.6	0.0
					58	0.7	0.0	4.6	-0.3	0.9	0.0
					66	0.6	0.3	3.2	-0.0	1.1	0.0
					25	0.3	0.0	3.4	0.1	1.4	0.0
				Min	34	-0.4	-0.3	-4.1	-0.6	-0.1	0.0
					58	-0.2	-0.1	-1.9	-0.9	-2.1	0.0
					66	-0.3	-0.4	-0.4	-0.3	-1.7	0.0
					25	-0.8	-0.1	0.1	-0.1	0.1	0.0
			RC ENV~2	Max	34	-0.1	0.2	-0.7	-0.1	0.9	0.0
					58	0.3	-0.0	3.0	-0.4	0.3	0.0
					66	0.4	0.0	2.1	-0.1	0.6	0.0
					25	-0.2	0.0	2.2	0.1	1.0	0.0
				Min	34	-0.2	0.0	-2.6	-0.3	0.4	0.0
					58	0.2	-0.0	0.7	-0.7	-0.9	0.0
					66	0.0	-0.2	1.1	-0.2	-0.5	0.0
					25	-0.5	-0.0	1.1	0.0	0.2	0.0
59	1	1	SX (RS)		58	1.0	0.3	1.1	0.2	1.4	0.0
					59	0.6	0.2	0.3	0.3	1.5	0.0
					67	0.7	0.2	0.5	0.1	1.4	0.0
					66	0.3	0.1	1.2	0.1	1.4	0.0
			SY (RS)		58	0.6	0.4	0.8	0.3	0.5	0.0
					59	0.1	0.3	0.8	0.1	0.4	0.0
					67	0.5	0.3	1.9	0.2	0.4	0.0
					66	0.1	0.2	1.6	0.1	0.3	0.0
			RC ENV~1	Max	58	0.9	0.4	-0.8	0.1	1.5	0.0
					59	0.7	0.2	4.3	-0.3	1.9	0.0
					67	0.8	0.2	3.4	0.0	2.4	0.0
					66	0.2	0.3	3.2	0.3	1.7	0.0
				Min	58	-1.0	-0.3	-4.0	-0.5	-1.4	0.0
					59	-0.4	-0.4	1.5	-0.9	-1.2	0.0
					67	-0.7	-0.3	-0.5	-0.3	-0.9	0.0
					66	-0.5	-0.2	-0.1	0.0	-1.1	0.0
			RC ENV~2	Max	58	0.3	0.2	-1.6	-0.0	0.3	0.0
					59	0.4	0.1	3.1	-0.5	1.3	0.0
					67	0.4	0.0	1.9	-0.1	1.6	0.0
					66	-0.1	0.2	1.9	0.2	0.5	0.0
				Min	58	-0.5	-0.1	-2.9	-0.3	-0.9	0.0
					59	-0.0	-0.2	2.2	-0.6	0.2	0.0
					67	-0.2	-0.1	1.0	-0.2	0.4	0.0
					66	-0.3	-0.0	1.0	0.1	-0.6	0.0
60	1	1	SX (RS)		59	0.7	0.1	1.0	0.0	1.2	0.0
					60	0.6	0.1	0.7	0.2	1.1	0.0
					68	0.7	0.0	0.4	0.1	1.0	0.0
					67	0.6	0.2	0.4	0.1	1.4	0.0
			SY (RS)		59	0.6	0.1	0.5	0.2	0.4	0.0
					60	0.4	0.1	0.6	0.2	0.6	0.0
					68	0.7	0.1	1.7	0.2	0.5	0.0
					67	0.5	0.2	1.8	0.2	0.4	0.0
			RC ENV~1	Max	59	0.7	0.1	-0.0	0.1	0.5	0.0
					60	0.7	0.1	3.6	-0.2	2.8	0.0
					68	0.7	0.1	2.9	0.1	3.2	0.0
					67	0.6	0.2	3.3	0.3	0.9	0.0
				Min	59	-0.8	-0.1	-2.5	-0.4	-2.7	0.0
					60	-0.6	-0.1	1.0	-0.7	-0.2	0.0
					68	-0.7	-0.1	-0.5	-0.3	0.0	0.0
					67	-0.7	-0.1	-0.3	-0.0	-2.4	0.0

			RC ENV~2	Max	59	0.2	0.0	-0.9	-0.0	-0.6	0.0
					60	0.4	0.0	2.6	-0.4	1.9	0.0
					68	0.3	-0.0	1.3	-0.1	2.2	0.0
					67	0.2	0.1	2.0	0.2	-0.4	0.0
				Min	59	-0.4	-0.0	-1.8	-0.2	-1.9	0.0
					60	-0.1	-0.1	1.6	-0.5	0.8	0.0
					68	-0.2	-0.0	0.4	-0.2	1.0	0.0
					67	-0.3	-0.0	1.2	0.1	-1.6	0.0
61	1	1	SX (RS)		60	0.5	0.0	0.8	0.0	1.0	0.0
					61	0.6	0.0	0.6	0.1	0.7	0.0
					69	0.6	0.0	0.4	0.0	0.7	0.0
					68	0.6	0.0	0.4	0.1	1.0	0.0
			SY (RS)		60	0.7	0.1	0.6	0.3	0.5	0.0
					61	0.6	0.1	0.7	0.2	0.5	0.0
					69	0.8	0.1	1.8	0.2	0.5	0.0
					68	0.7	0.1	1.7	0.2	0.5	0.0
			RC ENV~1	Max	60	0.7	0.1	0.5	0.1	-0.2	0.0
					61	0.6	0.0	2.7	-0.1	3.1	0.0
					69	0.8	0.1	2.7	0.1	3.5	0.0
					68	0.7	0.1	3.7	0.3	-0.0	0.0
				Min	60	-0.7	-0.1	-1.5	-0.5	-3.6	0.0
					61	-0.6	-0.1	0.4	-0.6	0.4	0.0
					69	-0.8	-0.1	-0.9	-0.3	0.6	0.0
					68	-0.7	-0.0	-0.0	-0.1	-3.2	0.0
			RC ENV~2	Max	60	0.2	0.0	-0.3	0.0	-1.1	0.0
					61	0.3	-0.0	1.9	-0.3	2.2	0.0
					69	0.2	-0.0	1.0	-0.1	2.4	0.0
					68	0.2	0.0	2.6	0.2	-1.0	0.0
				Min	60	-0.3	0.0	-1.0	-0.2	-2.5	0.0
					61	-0.2	-0.0	1.0	-0.4	1.1	0.0
					69	-0.2	-0.0	-0.3	-0.2	1.2	0.0
					68	-0.3	0.0	1.6	0.1	-2.2	0.0
62	1	1	SX (RS)		61	0.4	0.1	0.7	0.0	0.7	0.0
					62	0.4	0.0	0.7	0.1	0.4	0.0
					70	0.4	0.0	0.4	0.0	0.3	0.0
					69	0.5	0.0	0.5	0.0	0.7	0.0
			SY (RS)		61	0.8	0.1	0.5	0.3	0.6	0.0
					62	0.7	0.1	0.6	0.2	0.5	0.0
					70	0.9	0.1	2.2	0.2	0.4	0.0
					69	0.8	0.1	2.0	0.2	0.5	0.0
			RC ENV~1	Max	61	0.8	0.1	1.1	0.1	-0.7	0.0
					62	0.7	0.1	1.6	-0.2	2.7	0.0
					70	0.8	0.1	2.9	0.2	3.1	0.0
					69	0.8	0.1	4.8	0.3	-0.6	0.0
				Min	61	-0.8	-0.1	-0.4	-0.6	-3.9	0.0
					62	-0.7	-0.1	-0.4	-0.6	0.6	0.0
					70	-0.9	-0.1	-1.7	-0.3	0.7	0.0
					69	-0.8	-0.1	-0.0	-0.1	-3.5	0.0
			RC ENV~2	Max	61	0.1	0.0	0.5	0.0	-1.3	0.0
					62	0.2	0.0	1.1	-0.4	1.9	0.0
					70	0.2	0.0	0.7	-0.0	2.2	0.0
					69	0.2	0.0	3.4	0.2	-1.2	0.0
				Min	61	-0.2	-0.0	-0.2	-0.2	-2.7	0.0
					62	-0.1	-0.0	0.3	-0.5	1.1	0.0
					70	-0.2	-0.0	-0.9	-0.2	1.1	0.0
					69	-0.2	0.0	1.9	0.1	-2.4	0.0

63	1	1	SX (RS)	62	0.2	0.1	0.7	0.1	0.3	0.0
				63	0.3	0.1	0.9	0.0	0.0	0.0
				71	0.3	0.1	0.3	0.0	0.1	0.0
				70	0.3	0.0	0.5	0.0	0.3	0.0
			SY (RS)	62	0.9	0.1	0.4	0.3	0.5	0.0
				63	0.8	0.0	0.4	0.2	0.6	0.0
				71	0.9	0.2	2.7	0.2	0.4	0.0
				70	0.9	0.1	2.5	0.2	0.4	0.0
			RC ENV~1 Max	62	0.8	0.1	1.9	-0.0	-0.6	0.0
				63	0.8	0.1	0.2	-0.2	1.7	0.0
				71	0.9	0.2	3.4	0.2	2.0	0.0
				70	0.9	0.1	6.0	0.3	-0.7	0.0
			Min	62	-0.9	-0.2	0.4	-0.7	-3.5	0.0
				63	-0.8	-0.1	-1.5	-0.7	0.1	0.0
				71	-0.9	-0.2	-2.6	-0.2	0.2	0.0
				70	-0.8	-0.1	-0.3	-0.2	-3.1	0.0
			RC ENV~2 Max	62	0.1	-0.0	1.4	-0.1	-1.2	0.0
				63	0.1	0.0	-0.0	-0.4	1.2	0.0
				71	0.2	0.1	0.7	0.1	1.4	0.0
				70	0.1	0.0	4.2	0.2	-1.1	0.0
			Min	62	-0.2	-0.0	0.7	-0.4	-2.4	0.0
				63	-0.1	-0.0	-0.8	-0.5	0.7	0.0
				71	-0.1	0.0	-1.5	-0.1	0.7	0.0
				70	-0.1	-0.0	2.2	0.0	-2.2	0.0
64	1	1	SX (RS)	63	0.1	0.1	0.5	0.2	0.1	0.0
				64	0.2	0.1	1.1	0.2	0.4	0.0
				72	0.2	0.1	0.3	0.0	0.3	0.0
				71	0.2	0.1	0.4	0.0	0.1	0.0
			SY (RS)	63	1.1	0.4	1.1	0.0	0.3	0.0
				64	0.8	0.4	1.9	0.6	1.4	0.0
				72	1.3	0.3	2.1	0.0	1.2	0.0
				71	0.9	0.3	3.0	0.2	0.4	0.0
			RC ENV~1 Max	63	1.0	0.3	3.6	-0.4	-0.3	0.0
				64	0.8	0.5	-0.2	0.1	1.4	0.0
				72	1.4	0.4	3.4	0.2	0.9	0.0
				71	0.9	0.2	7.1	0.2	-0.2	0.0
			Min	63	-1.2	-0.5	0.9	-0.8	-2.3	0.0
				64	-0.9	-0.3	-4.1	-1.1	-1.5	0.0
				72	-1.2	-0.2	-2.7	-0.2	-1.4	0.0
				71	-0.9	-0.3	-0.8	-0.2	-2.0	0.0
			RC ENV~2 Max	63	-0.1	-0.1	2.7	-0.3	-0.6	0.0
				64	0.0	0.1	-1.8	-0.4	0.0	0.0
				72	0.3	0.1	1.3	0.1	0.1	0.0
				71	0.0	-0.0	4.9	0.1	-0.7	0.0
			Min	63	-0.2	-0.2	1.9	-0.7	-1.6	0.0
				64	-0.0	0.0	-3.0	-0.7	-0.4	0.0
				72	0.1	0.1	-1.5	-0.1	-0.4	0.0
				71	-0.1	-0.1	2.2	-0.1	-1.4	0.0
65	1	1	SX (RS)	64	0.1	0.1	2.0	0.1	0.4	0.0
				65	0.2	0.0	1.7	0.0	0.6	0.0
				26	0.1	0.1	0.6	0.0	0.0	0.0
				72	0.1	0.1	0.3	0.0	0.3	0.0
			SY (RS)	64	1.4	0.1	1.2	0.7	0.9	0.0
				65	1.1	0.5	3.8	0.8	2.1	0.0
				26	1.6	0.1	0.2	0.0	2.0	0.0

					72	1.3	0.4	2.5	0.0	1.2	0.0
			RC ENV~1	Max	64	1.3	0.1	3.2	-0.0	1.5	0.0
					65	1.2	0.6	2.1	0.4	1.4	0.0
					26	1.8	0.1	2.7	0.1	1.3	0.0
					72	1.2	0.3	7.5	0.2	1.4	0.0
				Min	64	-1.6	-0.1	-0.8	-1.5	-0.4	0.0
					65	-1.0	-0.4	-5.4	-1.2	-2.8	0.0
					26	-1.4	-0.1	-2.4	-0.3	-2.8	0.0
					72	-1.4	-0.4	-0.8	-0.2	-0.9	0.0
			RC ENV~2	Max	64	-0.1	-0.0	2.0	-0.5	0.6	0.0
					65	0.3	0.1	-1.2	-0.4	-0.7	0.0
					26	0.4	0.0	2.2	0.1	-0.7	0.0
					72	-0.1	-0.1	5.1	0.1	0.4	0.0
				Min	64	-0.4	-0.0	0.7	-0.8	-0.1	0.0
					65	0.1	0.1	-2.8	-0.7	-1.7	0.0
					26	0.2	-0.0	-1.1	-0.2	-1.5	0.0
					72	-0.3	-0.1	1.6	-0.1	-0.1	0.0
66	1	1	SX (RS)		73	0.3	0.2	2.1	0.4	0.5	0.0
					74	0.3	0.1	1.0	0.4	0.1	0.0
					81	0.3	0.2	0.9	0.0	0.1	0.0
					80	0.3	0.2	0.2	0.1	0.6	0.0
			SY (RS)		73	0.6	0.1	4.1	1.4	0.9	0.0
					74	0.9	0.6	1.6	0.9	0.3	0.0
					81	0.7	0.1	0.8	0.6	0.5	0.0
					80	0.9	0.9	6.4	0.3	0.8	0.0
			RC ENV~1	Max	73	0.6	0.1	4.0	0.7	1.6	0.0
					74	1.0	0.5	3.9	0.7	1.7	0.0
					81	0.6	0.2	4.2	1.1	1.5	0.0
					80	0.9	1.0	4.6	1.4	2.3	0.0
				Min	73	-0.5	-0.3	-4.1	-2.1	-1.0	0.0
					74	-0.8	-0.8	0.3	-1.2	-1.0	0.0
					81	-0.7	-0.1	1.7	-0.0	-0.8	0.0
					80	-1.0	-0.7	-8.2	0.2	-1.0	0.0
			RC ENV~2	Max	73	0.1	-0.0	0.3	-0.6	1.0	0.0
					74	0.2	-0.1	2.9	-0.2	1.4	0.0
					81	0.1	0.1	3.4	0.6	1.0	0.0
					80	-0.1	0.3	0.1	1.0	1.4	0.0
				Min	73	-0.1	-0.2	-1.0	-0.8	-0.1	0.0
					74	0.0	-0.3	1.6	-0.8	-0.4	0.0
					81	-0.1	-0.0	1.6	0.5	-0.3	0.0
					80	-0.2	0.1	-1.9	0.5	-0.2	0.0
67	1	1	SX (RS)		74	0.3	0.2	0.8	0.1	0.1	0.0
					75	0.1	0.1	0.8	0.1	0.3	0.0
					82	0.3	0.1	0.5	0.1	0.4	0.0
					81	0.1	0.1	0.5	0.2	0.1	0.0
			SY (RS)		74	0.5	0.2	1.1	0.3	0.6	0.0
					75	0.8	0.3	0.9	0.6	0.4	0.0
					82	0.6	0.2	1.5	0.2	0.5	0.0
					81	0.9	0.3	1.7	0.4	0.3	0.0
			RC ENV~1	Max	74	0.5	0.2	2.2	-0.1	1.1	0.0
					75	0.8	0.3	1.8	0.7	2.1	0.0
					82	0.6	0.3	4.0	0.5	1.7	0.0
					81	0.8	0.4	1.4	0.6	1.3	0.0
				Min	74	-0.5	-0.3	-0.3	-0.7	-1.5	0.0
					75	-0.7	-0.4	-0.3	-0.7	-1.1	0.0
					82	-0.6	-0.2	0.9	0.0	-1.0	0.0

					81	-0.9	-0.3	-2.5	-0.4	-1.6	0.0
			RC ENV~2	Max	74	0.0	0.0	1.2	-0.4	0.5	0.0
					75	0.2	-0.0	1.3	0.2	1.7	0.0
					82	0.1	0.0	2.5	0.3	1.3	0.0
					81	-0.0	0.1	0.7	0.4	0.6	0.0
				Min	74	-0.1	-0.1	0.0	-0.5	-0.8	0.0
					75	0.0	-0.1	0.5	-0.4	-0.4	0.0
					82	-0.0	-0.0	1.4	0.2	-0.4	0.0
					81	-0.2	0.0	-0.9	-0.0	-1.3	0.0
68	1	1	SX (RS)		75	0.4	0.1	0.7	0.1	0.4	0.0
					76	0.2	0.1	0.7	0.0	0.6	0.0
					83	0.4	0.1	0.4	0.1	0.7	0.0
					82	0.2	0.1	0.5	0.0	0.3	0.0
			SY (RS)		75	0.4	0.2	1.3	0.3	0.4	0.0
					76	0.7	0.2	0.8	0.6	0.4	0.0
					83	0.5	0.2	1.1	0.2	0.5	0.0
					82	0.7	0.2	1.6	0.4	0.4	0.0
			RC ENV~1	Max	75	0.4	0.1	3.1	0.2	1.1	0.0
					76	0.7	0.2	0.9	0.8	2.2	0.0
					83	0.5	0.2	2.6	0.4	1.9	0.0
					82	0.7	0.2	1.9	0.3	1.1	0.0
				Min	75	-0.4	-0.2	0.6	-0.5	-1.6	0.0
					76	-0.7	-0.2	-1.0	-0.6	-1.4	0.0
					83	-0.4	-0.2	0.4	-0.1	-1.4	0.0
					82	-0.8	-0.2	-1.5	-0.6	-2.0	0.0
			RC ENV~2	Max	75	0.0	-0.0	1.9	-0.1	0.5	0.0
					76	0.2	0.0	0.6	0.2	1.6	0.0
					83	0.2	0.0	1.5	0.2	1.3	0.0
					82	0.0	0.0	1.2	0.2	0.4	0.0
				Min	75	-0.2	-0.1	0.7	-0.4	-1.3	0.0
					76	0.0	-0.0	-0.2	-0.3	-0.6	0.0
					83	-0.0	0.0	0.9	0.1	-0.6	0.0
					82	-0.2	0.0	0.0	-0.2	-1.7	0.0
69	1	1	SX (RS)		76	0.6	0.1	0.7	0.2	0.7	0.0
					77	0.4	0.2	0.8	0.1	0.9	0.0
					84	0.6	0.0	0.3	0.2	1.0	0.0
					83	0.4	0.1	0.4	0.0	0.6	0.0
			SY (RS)		76	0.2	0.2	1.0	0.4	0.4	0.0
					77	0.6	0.2	1.0	0.5	0.4	0.0
					84	0.3	0.2	1.0	0.3	0.5	0.0
					83	0.7	0.2	1.0	0.4	0.5	0.0
			RC ENV~1	Max	76	0.5	0.1	3.4	0.2	1.3	0.0
					77	0.6	0.2	0.1	0.5	1.9	0.0
					84	0.7	0.2	1.7	0.5	1.7	0.0
					83	0.7	0.2	2.6	0.3	1.3	0.0
				Min	76	-0.6	-0.2	1.3	-0.7	-1.9	0.0
					77	-0.6	-0.2	-1.9	-0.8	-1.9	0.0
					84	-0.5	-0.1	-0.4	-0.1	-2.0	0.0
					83	-0.7	-0.3	0.1	-0.5	-2.2	0.0
			RC ENV~2	Max	76	0.0	-0.0	2.5	-0.1	0.6	0.0
					77	0.2	0.1	-0.2	0.0	1.1	0.0
					84	0.3	0.1	0.7	0.4	0.8	0.0
					83	0.1	0.0	1.9	0.2	0.5	0.0
				Min	76	-0.3	-0.1	1.2	-0.5	-1.3	0.0
					77	-0.1	-0.0	-0.9	-0.5	-1.0	0.0
					84	-0.0	0.0	0.3	0.2	-1.2	0.0

				83	-0.2	-0.0	1.1	-0.1	-1.6	0.0
70	1	1	SX (RS)	77	0.7	0.1	0.9	0.3	1.0	0.0
				78	0.7	0.2	1.0	0.2	1.2	0.0
				85	0.7	0.1	0.3	0.3	1.4	0.0
				84	0.7	0.2	0.4	0.1	0.9	0.0
			SY (RS)	77	0.1	0.3	0.9	0.4	0.4	0.0
				78	0.6	0.3	0.9	0.3	0.3	0.0
				85	0.1	0.3	1.1	0.3	0.4	0.0
				84	0.6	0.3	1.0	0.3	0.4	0.0
		RC ENV~1	Max	77	0.6	0.2	4.2	-0.2	1.9	0.0
				78	0.7	0.3	-2.2	-0.3	1.0	0.0
				85	0.9	0.4	1.8	0.7	1.1	0.0
				84	0.7	0.3	4.1	0.4	1.7	0.0
			Min	77	-0.9	-0.4	2.3	-1.3	-1.8	0.0
				78	-0.7	-0.3	-4.3	-1.6	-3.1	0.0
				85	-0.6	-0.2	-0.3	0.0	-3.2	0.0
				84	-0.7	-0.3	1.6	-0.3	-2.0	0.0
		RC ENV~2	Max	77	0.1	-0.0	3.3	-0.6	1.0	0.0
				78	0.3	0.1	-2.5	-0.6	-0.1	0.0
				85	0.5	0.2	1.1	0.5	-0.2	0.0
				84	0.2	0.0	3.1	0.3	0.9	0.0
			Min	77	-0.5	-0.2	2.1	-1.0	-0.9	0.0
				78	-0.2	-0.0	-3.3	-1.1	-2.0	0.0
				85	-0.1	0.0	0.5	0.3	-2.1	0.0
				84	-0.3	-0.1	2.6	-0.0	-1.2	0.0
71	1	1	SX (RS)	78	1.0	0.3	1.1	0.5	1.3	0.0
				79	1.2	0.3	2.6	0.4	1.6	0.0
				86	0.9	0.4	0.9	0.1	1.8	0.0
				85	1.1	0.2	0.7	0.1	1.2	0.0
			SY (RS)	78	0.2	0.5	0.9	0.7	0.4	0.0
				79	0.6	0.1	2.5	0.9	0.3	0.0
				86	0.1	0.7	3.5	0.0	0.1	0.0
				85	0.7	0.2	0.7	0.3	0.4	0.0
		RC ENV~1	Max	78	0.8	0.4	3.0	-0.6	3.1	0.0
				79	1.2	0.2	-0.4	-0.2	0.6	0.0
				86	1.1	0.9	4.5	1.2	0.5	0.0
				85	1.1	0.2	5.3	0.6	2.7	0.0
			Min	78	-1.2	-0.7	0.4	-2.3	-1.1	0.0
				79	-1.2	-0.3	-5.6	-2.2	-3.8	0.0
				86	-0.7	-0.5	-2.5	0.5	-4.1	0.0
				85	-1.1	-0.2	2.8	-0.2	-1.2	0.0
		RC ENV~2	Max	78	0.1	0.0	2.0	-1.2	2.0	0.0
				79	0.6	0.0	-1.7	-1.1	-0.9	0.0
				86	0.6	0.4	1.8	0.8	-1.2	0.0
				85	0.3	0.1	4.0	0.4	1.7	0.0
			Min	78	-0.7	-0.3	0.6	-1.7	0.1	0.0
				79	-0.3	-0.2	-3.6	-1.6	-2.6	0.0
				86	-0.1	0.0	0.4	0.6	-2.9	0.0
				85	-0.5	-0.1	3.2	0.1	-0.2	0.0
72	1	1	SX (RS)	79	1.5	0.9	2.7	0.4	1.8	0.0
				16	3.1	0.9	5.0	1.0	5.6	0.0
				37	0.4	0.7	0.9	0.2	1.4	0.0
				86	2.0	0.7	3.2	0.3	1.7	0.0
			SY (RS)	79	0.6	0.5	1.0	0.3	0.3	0.0
				16	1.1	2.1	4.9	3.7	1.4	0.0

					37	0.8	0.4	1.6	0.2	0.6	0.0
					86	1.0	1.2	4.2	0.5	0.5	0.0
			RC ENV~1	Max	79	1.1	0.8	3.9	-1.9	3.8	0.0
					16	3.2	2.6	-3.4	0.5	2.9	0.0
					37	1.1	0.5	9.4	0.6	-0.9	0.0
					86	2.0	0.9	10.0	0.7	3.6	0.0
				Min	79	-1.9	-1.0	-1.6	-4.1	-0.7	0.0
					16	-3.1	-1.5	-15.8	-7.0	-8.3	-0.0
					37	-0.4	-0.8	3.3	0.1	-5.1	0.0
					86	-1.9	-1.5	1.5	-0.3	-0.8	0.0
			RC ENV~2	Max	79	0.1	0.3	1.7	-2.3	2.6	0.0
					16	1.4	1.0	-6.3	-3.0	-1.0	-0.0
					37	0.6	0.1	6.8	0.4	-2.2	0.0
					86	0.7	0.1	7.4	0.4	2.4	0.0
				Min	79	-1.1	-0.5	-0.5	-3.0	0.9	0.0
					16	-1.1	0.1	-11.7	-4.6	-5.3	-0.0
					37	0.2	-0.5	4.9	0.3	-3.6	0.0
					86	-0.8	-0.6	4.1	0.1	0.8	0.0
73	1	1	SX (RS)		65	0.2	0.0	1.7	0.0	0.6	0.0
					80	0.1	0.1	2.0	0.1	0.4	0.0
					87	0.1	0.1	0.3	0.0	0.3	0.0
					26	0.1	0.1	0.6	0.0	0.0	0.0
			SY (RS)		65	1.1	0.5	3.8	0.8	2.1	0.0
					80	1.4	0.1	1.2	0.7	0.9	0.0
					87	1.3	0.4	2.5	0.0	1.2	0.0
					26	1.6	0.1	0.2	0.0	2.0	0.0
			RC ENV~1	Max	65	1.0	0.6	2.3	0.3	3.0	0.0
					80	1.6	0.1	3.2	0.2	0.8	0.0
					87	1.4	0.3	5.5	0.1	1.1	0.0
					26	1.4	0.1	6.1	0.3	2.8	0.0
				Min	65	-1.2	-0.4	-5.2	-1.3	-1.2	0.0
					80	-1.3	-0.1	-0.7	-1.3	-2.7	0.0
					87	-1.2	-0.4	-1.1	-0.4	-2.1	0.0
					26	-1.8	-0.1	-0.0	-0.1	-1.3	0.0
			RC ENV~2	Max	65	-0.1	0.1	-0.9	-0.3	1.6	0.0
					80	0.4	-0.0	1.8	-0.5	-0.1	0.0
					87	0.3	-0.0	3.1	0.0	-0.0	0.0
					26	-0.2	0.0	4.0	0.2	1.5	0.0
				Min	65	-0.2	0.1	-2.4	-0.5	0.8	0.0
					80	0.2	-0.0	0.5	-0.9	-1.8	0.0
					87	0.1	-0.1	-0.2	-0.2	-1.4	0.0
					26	-0.4	-0.0	0.5	-0.1	0.7	0.0
74	1	1	SX (RS)		80	0.2	0.1	1.1	0.2	0.4	0.0
					81	0.1	0.1	0.5	0.2	0.1	0.0
					88	0.2	0.1	0.4	0.0	0.1	0.0
					87	0.2	0.1	0.3	0.0	0.3	0.0
			SY (RS)		80	0.8	0.4	1.9	0.6	1.4	0.0
					81	1.1	0.4	1.1	0.0	0.3	0.0
					88	0.9	0.3	3.0	0.2	0.4	0.0
					87	1.3	0.3	2.1	0.0	1.2	0.0
			RC ENV~1	Max	80	0.9	0.5	0.4	0.2	1.7	0.0
					81	1.2	0.3	3.6	-0.1	1.4	0.0
					88	0.9	0.2	6.3	0.3	1.4	0.0
					87	1.2	0.4	3.7	0.4	2.1	0.0
				Min	80	-0.8	-0.3	-3.6	-1.0	-1.4	0.0
					81	-1.0	-0.5	1.0	-0.9	-1.6	0.0

					88	-0.9	-0.3	0.3	-0.2	-1.3	0.0
					87	-1.4	-0.2	-2.7	-0.1	-1.1	0.0
			RC ENV~2	Max	80	0.1	0.1	-1.2	-0.3	1.1	0.0
					81	0.2	-0.0	2.7	-0.2	1.1	0.0
					88	0.1	-0.0	3.4	0.1	1.0	0.0
					87	-0.1	0.1	2.2	0.2	1.4	0.0
				Min	80	-0.1	0.0	-2.6	-0.5	0.0	0.0
					81	0.1	-0.2	1.8	-0.6	-0.8	0.0
					88	-0.0	-0.1	0.9	-0.1	-0.6	0.0
					87	-0.3	0.0	-0.6	-0.0	0.0	0.0
75	1	1	SX (RS)		81	0.3	0.1	0.9	0.0	0.0	0.0
					82	0.2	0.1	0.7	0.1	0.3	0.0
					89	0.3	0.0	0.5	0.0	0.3	0.0
					88	0.3	0.1	0.3	0.0	0.1	0.0
			SY (RS)		81	0.8	0.0	0.4	0.2	0.6	0.0
					82	0.9	0.1	0.4	0.3	0.5	0.0
					89	0.9	0.1	2.5	0.2	0.4	0.0
					88	0.9	0.2	2.7	0.2	0.4	0.0
			RC ENV~1	Max	81	0.8	0.1	1.2	-0.0	1.1	0.0
					82	0.9	0.1	2.2	0.4	2.2	0.0
					89	0.8	0.1	5.2	0.3	1.8	0.0
					88	0.9	0.2	2.3	0.2	1.3	0.0
				Min	81	-0.8	-0.1	-0.7	-0.5	-1.5	0.0
					82	-0.9	-0.2	0.3	-0.4	-1.2	0.0
					89	-0.9	-0.1	0.3	-0.1	-1.1	0.0
					88	-0.9	-0.2	-3.5	-0.3	-1.4	0.0
			RC ENV~2	Max	81	0.0	0.0	0.4	-0.2	0.5	0.0
					82	0.2	-0.0	1.6	0.1	1.7	0.0
					89	0.1	0.0	2.8	0.1	1.5	0.0
					88	0.0	0.1	1.3	0.1	0.6	0.0
				Min	81	-0.1	-0.0	-0.4	-0.3	-0.8	0.0
					82	0.0	-0.0	0.8	-0.3	-0.5	0.0
					89	-0.0	-0.0	1.0	-0.0	-0.5	0.0
					88	-0.1	0.0	-0.9	-0.1	-1.0	0.0
76	1	1	SX (RS)		82	0.4	0.0	0.7	0.1	0.4	0.0
					83	0.4	0.1	0.7	0.0	0.7	0.0
					90	0.5	0.0	0.5	0.0	0.7	0.0
					89	0.4	0.0	0.4	0.0	0.3	0.0
			SY (RS)		82	0.7	0.1	0.6	0.2	0.5	0.0
					83	0.8	0.1	0.5	0.3	0.6	0.0
					90	0.8	0.1	2.0	0.2	0.5	0.0
					89	0.9	0.1	2.2	0.2	0.4	0.0
			RC ENV~1	Max	82	0.7	0.1	2.1	0.1	1.1	0.0
					83	0.8	0.1	1.1	0.5	2.2	0.0
					90	0.8	0.1	3.9	0.3	2.1	0.0
					89	0.9	0.1	2.0	0.1	1.1	0.0
				Min	82	-0.7	-0.1	0.5	-0.3	-1.7	0.0
					83	-0.8	-0.1	-0.5	-0.3	-1.4	0.0
					90	-0.8	-0.1	-0.0	-0.1	-1.4	0.0
					89	-0.8	-0.1	-2.5	-0.3	-1.8	0.0
			RC ENV~2	Max	82	0.1	0.0	1.5	-0.1	0.5	0.0
					83	0.2	0.0	0.7	0.2	1.7	0.0
					90	0.2	0.0	2.0	0.1	1.5	0.0
					89	0.1	0.0	1.2	0.0	0.5	0.0
				Min	82	-0.2	-0.0	0.6	-0.2	-1.3	0.0
					83	-0.1	-0.0	0.1	-0.1	-0.6	0.0

					90	-0.1	0.0	0.9	0.0	-0.6	0.0
					89	-0.1	-0.0	-0.3	-0.1	-1.5	0.0
77	1	1	SX (RS)		83	0.6	0.0	0.6	0.1	0.7	0.0
					84	0.5	0.0	0.8	0.0	1.0	0.0
					91	0.6	0.0	0.4	0.1	1.0	0.0
					90	0.6	0.0	0.4	0.0	0.7	0.0
			SY (RS)		83	0.6	0.1	0.7	0.2	0.5	0.0
					84	0.7	0.1	0.6	0.3	0.5	0.0
					91	0.7	0.1	1.7	0.2	0.5	0.0
					90	0.8	0.1	1.8	0.2	0.5	0.0
			RC ENV~1	Max	83	0.6	0.0	2.9	0.1	1.4	0.0
					84	0.7	0.1	0.1	0.4	2.0	0.0
					91	0.7	0.1	3.0	0.3	1.9	0.0
					90	0.8	0.1	2.4	0.1	1.4	0.0
				Min	83	-0.6	-0.1	1.5	-0.4	-1.9	0.0
					84	-0.7	-0.1	-1.5	-0.3	-1.9	0.0
					91	-0.7	-0.0	-0.5	-0.1	-2.0	0.0
					90	-0.8	-0.1	-1.3	-0.3	-2.1	0.0
			RC ENV~2	Max	83	0.1	-0.0	2.3	-0.1	0.7	0.0
					84	0.2	0.0	-0.2	0.1	1.2	0.0
					91	0.2	0.0	1.2	0.1	1.0	0.0
					90	0.1	-0.0	1.6	-0.0	0.6	0.0
				Min	83	-0.2	-0.0	1.3	-0.3	-1.3	0.0
					84	-0.1	0.0	-0.8	-0.2	-1.0	0.0
					91	-0.1	0.0	0.7	0.0	-1.1	0.0
					90	-0.2	-0.0	0.6	-0.1	-1.5	0.0
78	1	1	SX (RS)		84	0.6	0.1	0.7	0.2	1.1	0.0
					85	0.7	0.1	1.0	0.0	1.2	0.0
					92	0.6	0.2	0.4	0.1	1.4	0.0
					91	0.7	0.0	0.4	0.1	1.0	0.0
			SY (RS)		84	0.4	0.1	0.6	0.2	0.6	0.0
					85	0.6	0.1	0.5	0.2	0.4	0.0
					92	0.5	0.2	1.8	0.2	0.4	0.0
					91	0.7	0.1	1.7	0.2	0.5	0.0
			RC ENV~1	Max	84	0.6	0.1	3.3	-0.0	2.2	0.0
					85	0.7	0.1	-0.5	0.2	1.4	0.0
					92	0.7	0.2	2.6	0.3	1.4	0.0
					91	0.7	0.1	3.1	0.1	2.0	0.0
				Min	84	-0.7	-0.2	1.9	-0.6	-1.8	0.0
					85	-0.7	-0.1	-2.5	-0.4	-2.7	0.0
					92	-0.6	-0.1	-1.0	-0.0	-2.9	0.0
					91	-0.7	-0.1	-0.4	-0.3	-1.9	0.0
			RC ENV~2	Max	84	0.1	0.0	2.7	-0.3	1.3	0.0
					85	0.3	0.0	-1.0	-0.0	0.3	0.0
					92	0.3	0.1	1.1	0.2	0.1	0.0
					91	0.2	-0.0	1.9	-0.0	1.1	0.0
				Min	84	-0.3	-0.1	1.7	-0.4	-0.8	0.0
					85	-0.2	-0.0	-1.7	-0.3	-1.7	0.0
					92	-0.1	-0.0	0.4	0.1	-1.9	0.0
					91	-0.3	-0.0	1.3	-0.1	-1.0	0.0
79	1	1	SX (RS)		85	0.6	0.2	0.3	0.3	1.5	0.0
					86	1.0	0.3	1.1	0.2	1.4	0.0
					93	0.3	0.1	1.2	0.1	1.4	0.0
					92	0.7	0.2	0.5	0.1	1.4	0.0
			SY (RS)		85	0.1	0.3	0.8	0.1	0.4	0.0

					86	0.6	0.4	0.8	0.3	0.5	0.0
					93	0.1	0.2	1.6	0.1	0.3	0.0
					92	0.5	0.3	1.9	0.2	0.4	0.0
			RC ENV~1	Max	85	0.4	0.2	3.3	-0.2	3.2	0.0
					86	1.0	0.4	-1.0	0.1	0.6	0.0
					93	0.5	0.3	3.1	0.2	0.4	0.0
					92	0.7	0.2	3.7	0.0	2.9	0.0
				Min	85	-0.7	-0.4	1.8	-0.9	-1.3	0.0
					86	-0.9	-0.3	-3.5	-0.6	-3.5	0.0
					93	-0.2	-0.2	-0.6	0.0	-3.7	0.0
					92	-0.7	-0.3	-0.1	-0.3	-1.4	0.0
			RC ENV~2	Max	85	-0.0	0.0	2.7	-0.4	2.1	0.0
					86	0.4	0.2	-1.5	-0.2	-0.7	0.0
					93	0.3	0.1	2.1	0.1	-0.9	0.0
					92	0.2	0.0	2.3	-0.1	1.9	0.0
				Min	85	-0.4	-0.2	1.7	-0.7	0.1	0.0
					86	-0.3	-0.1	-2.6	-0.4	-2.4	0.0
					93	0.1	0.0	0.8	0.1	-2.6	0.0
					92	-0.3	-0.1	1.4	-0.2	-0.1	0.0
80	1	1	SX (RS)		86	0.1	0.0	3.3	0.2	1.5	0.0
					37	0.3	0.1	3.0	0.1	0.5	0.0
					27	0.3	0.1	1.6	0.0	0.6	0.0
					93	0.4	0.1	1.4	0.1	1.4	0.0
			SY (RS)		86	0.4	0.1	0.7	0.2	0.1	0.0
					37	0.0	0.4	1.6	0.4	0.8	0.0
					27	0.5	0.0	0.8	0.1	0.7	0.0
					93	0.1	0.3	1.8	0.1	0.3	0.0
			RC ENV~1	Max	86	0.2	0.0	4.2	-0.3	4.1	0.0
					37	0.4	0.5	2.0	0.1	-0.6	0.0
					27	0.8	0.1	4.9	0.1	-0.6	0.0
					93	0.3	0.3	3.5	-0.0	3.7	0.0
				Min	86	-0.7	-0.1	-2.3	-1.0	-0.3	0.0
					37	-0.2	-0.3	-3.9	-0.7	-3.4	0.0
					27	-0.2	-0.1	0.1	-0.1	-3.3	0.0
					93	-0.6	-0.4	-0.2	-0.2	-0.4	0.0
			RC ENV~2	Max	86	-0.2	-0.0	1.6	-0.5	2.8	0.0
					37	0.2	0.2	0.2	-0.3	-1.4	0.0
					27	0.5	0.0	3.4	0.0	-1.3	0.0
					93	-0.1	-0.0	2.0	-0.1	2.6	0.0
				Min	86	-0.4	-0.0	-0.5	-0.8	1.1	0.0
					37	0.1	0.1	-1.8	-0.5	-2.4	0.0
					27	0.2	-0.0	1.5	-0.0	-2.3	0.0
					93	-0.4	-0.1	0.4	-0.1	0.9	0.0
81	1	1	SX (RS)		94	0.3	0.1	1.2	0.1	1.4	0.0
					95	0.7	0.2	0.5	0.1	1.4	0.0
					102	0.6	0.2	0.3	0.3	1.5	0.0
					101	1.0	0.3	1.1	0.2	1.4	0.0
			SY (RS)		94	0.1	0.2	1.6	0.1	0.3	0.0
					95	0.5	0.3	1.9	0.2	0.4	0.0
					102	0.1	0.3	0.8	0.1	0.4	0.0
					101	0.6	0.4	0.8	0.3	0.5	0.0
			RC ENV~1	Max	94	0.2	0.1	2.2	0.1	2.0	0.0
					95	0.7	0.3	4.9	0.2	1.8	0.0
					102	0.7	0.4	3.8	0.8	1.8	0.0
					101	1.0	0.3	-1.1	0.7	2.0	0.0
				Min	94	-0.5	-0.3	-1.1	-0.2	-0.7	0.0

					95	-0.7	-0.2	0.7	-0.1	-0.9	0.0
					102	-0.4	-0.2	1.7	0.2	-1.2	0.0
					101	-1.0	-0.4	-4.2	0.0	-0.9	0.0
			RC ENV~2	Max	94	-0.1	-0.0	0.6	-0.0	1.3	0.0
					95	0.3	0.1	3.6	0.1	1.0	0.0
					102	0.4	0.3	2.9	0.6	0.9	0.0
					101	0.4	0.1	-1.9	0.5	1.2	0.0
				Min	94	-0.3	-0.2	-0.3	-0.1	0.2	0.0
					95	-0.3	-0.0	2.6	0.0	0.0	0.0
					102	-0.1	-0.0	2.3	0.4	-0.1	0.0
					101	-0.4	-0.2	-3.1	0.3	0.1	0.0
82	1	1	SX (RS)		95	0.6	0.2	0.4	0.1	1.4	0.0
					96	0.7	0.0	0.4	0.1	1.0	0.0
					103	0.6	0.1	0.7	0.2	1.1	0.0
					102	0.7	0.1	1.0	0.0	1.2	0.0
			SY (RS)		95	0.5	0.2	1.8	0.2	0.4	0.0
					96	0.7	0.1	1.7	0.2	0.5	0.0
					103	0.4	0.1	0.6	0.2	0.6	0.0
					102	0.6	0.1	0.5	0.2	0.4	0.0
			RC ENV~1	Max	95	0.6	0.1	2.2	0.1	0.9	0.0
					96	0.7	0.1	3.9	0.2	2.5	0.0
					103	0.7	0.2	3.5	0.5	2.5	0.0
					102	0.7	0.1	-0.4	0.4	0.7	0.0
				Min	95	-0.6	-0.2	-1.4	-0.2	-1.8	0.0
					96	-0.7	-0.1	0.3	-0.1	0.3	0.0
					103	-0.6	-0.1	1.6	0.1	0.1	0.0
					102	-0.7	-0.1	-2.4	-0.1	-1.8	0.0
			RC ENV~2	Max	95	0.2	0.0	0.4	-0.0	-0.0	0.0
					96	0.3	0.0	2.8	0.1	1.9	0.0
					103	0.3	0.1	2.6	0.3	1.8	0.0
					102	0.3	0.0	-1.1	0.2	-0.2	0.0
				Min	95	-0.2	-0.1	-0.4	-0.1	-1.0	0.0
					96	-0.3	0.0	2.0	0.0	1.1	0.0
					103	-0.2	-0.0	2.0	0.2	1.0	0.0
					102	-0.3	-0.0	-1.8	0.2	-1.0	0.0
83	1	1	SX (RS)		96	0.6	0.0	0.4	0.1	1.0	0.0
					97	0.6	0.0	0.4	0.0	0.7	0.0
					104	0.6	0.0	0.6	0.1	0.7	0.0
					103	0.5	0.0	0.8	0.0	1.0	0.0
			SY (RS)		96	0.7	0.1	1.7	0.2	0.5	0.0
					97	0.8	0.1	1.8	0.2	0.5	0.0
					104	0.6	0.1	0.7	0.2	0.5	0.0
					103	0.7	0.1	0.6	0.3	0.5	0.0
			RC ENV~1	Max	96	0.7	0.0	2.7	0.1	-0.3	0.0
					97	0.8	0.1	3.0	0.2	3.0	0.0
					104	0.6	0.1	2.4	0.4	3.0	0.0
					103	0.7	0.1	0.4	0.4	-0.5	0.0
				Min	96	-0.7	-0.1	-0.8	-0.2	-2.5	0.0
					97	-0.9	-0.1	-0.7	-0.1	1.1	0.0
					104	-0.6	-0.0	0.9	-0.0	1.0	0.0
					103	-0.7	-0.1	-1.2	-0.2	-2.6	0.0
			RC ENV~2	Max	96	0.3	-0.0	1.0	-0.0	-1.1	0.0
					97	0.2	0.0	1.7	0.1	2.3	0.0
					104	0.2	0.0	1.8	0.2	2.2	0.0
					103	0.2	-0.0	-0.1	0.1	-1.2	0.0
				Min	96	-0.2	-0.0	0.3	-0.1	-1.9	0.0

					97	-0.3	0.0	1.2	0.0	1.7	0.0
					104	-0.2	0.0	1.4	0.1	1.7	0.0
					103	-0.2	-0.0	-0.6	0.1	-1.9	0.0
84	1	1	SX (RS)		97	0.5	0.0	0.5	0.0	0.7	0.0
					98	0.4	0.0	0.4	0.0	0.3	0.0
					105	0.4	0.0	0.7	0.1	0.4	0.0
					104	0.4	0.1	0.7	0.0	0.7	0.0
			SY (RS)		97	0.8	0.1	2.0	0.2	0.5	0.0
					98	0.9	0.1	2.2	0.2	0.4	0.0
					105	0.7	0.1	0.6	0.2	0.5	0.0
					104	0.8	0.1	0.5	0.3	0.6	0.0
			RC ENV~1	Max	97	0.9	0.1	3.7	0.1	-1.1	0.0
					98	0.8	0.1	2.5	0.3	2.6	0.0
					105	0.7	0.1	1.2	0.4	2.6	0.0
					104	0.8	0.1	1.7	0.4	-1.2	0.0
				Min	97	-0.8	-0.1	-0.2	-0.2	-3.0	0.0
					98	-0.9	-0.1	-1.9	-0.2	1.2	0.0
					105	-0.7	-0.1	-0.1	-0.0	1.0	0.0
					104	-0.8	-0.1	0.0	-0.3	-3.1	0.0
			RC ENV~2	Max	97	0.2	-0.0	1.8	-0.0	-1.7	0.0
					98	0.1	0.0	0.7	0.0	1.9	0.0
					105	0.1	0.0	0.7	0.2	1.9	0.0
					104	0.2	0.0	1.2	0.1	-1.8	0.0
				Min	97	-0.1	-0.0	1.4	-0.1	-2.3	0.0
					98	-0.2	-0.0	0.3	-0.0	1.6	0.0
					105	-0.2	-0.0	0.2	0.1	1.5	0.0
					104	-0.1	-0.0	0.6	0.0	-2.3	0.0
85	1	1	SX (RS)		98	0.3	0.0	0.5	0.0	0.3	0.0
					99	0.3	0.1	0.3	0.0	0.1	0.0
					106	0.3	0.1	0.9	0.0	0.1	0.0
					105	0.2	0.1	0.7	0.1	0.3	0.0
			SY (RS)		98	0.9	0.1	2.5	0.2	0.4	0.0
					99	0.9	0.2	2.7	0.2	0.4	0.0
					106	0.8	0.0	0.4	0.2	0.6	0.0
					105	0.9	0.1	0.4	0.3	0.5	0.0
			RC ENV~1	Max	98	0.9	0.1	5.1	0.2	-1.2	0.0
					99	0.9	0.1	2.5	0.1	1.3	0.0
					106	0.8	0.1	-0.1	0.5	1.5	0.0
					105	0.9	0.2	3.4	0.5	-1.1	0.0
				Min	98	-0.8	-0.1	0.1	-0.3	-2.6	0.0
					99	-0.9	-0.2	-2.8	-0.2	0.4	0.0
					106	-0.8	-0.1	-2.2	0.1	0.2	0.0
					105	-0.9	-0.1	1.1	-0.1	-2.6	0.0
			RC ENV~2	Max	98	0.2	0.0	2.8	0.0	-1.6	0.0
					99	0.1	-0.0	0.1	-0.0	0.9	0.0
					106	0.1	0.0	-0.9	0.3	1.0	0.0
					105	0.1	0.1	2.5	0.3	-1.7	0.0
				Min	98	-0.1	-0.0	2.4	-0.0	-1.9	0.0
					99	-0.1	-0.1	-0.3	-0.1	0.8	0.0
					106	-0.1	-0.0	-1.6	0.3	0.9	0.0
					105	-0.1	0.0	1.8	0.2	-1.9	0.0
86	1	1	SX (RS)		99	0.2	0.1	0.4	0.0	0.1	0.0
					100	0.2	0.1	0.3	0.0	0.3	0.0
					107	0.2	0.1	1.1	0.2	0.4	0.0
					106	0.1	0.1	0.5	0.2	0.1	0.0

			SY (RS)	99	0.9	0.3	3.0	0.2	0.4	0.0
				100	1.3	0.3	2.1	0.0	1.2	0.0
				107	0.8	0.4	1.9	0.6	1.4	0.0
				106	1.1	0.4	1.1	0.0	0.3	0.0
		RC ENV~1	Max	99	0.9	0.3	6.0	0.2	-0.4	0.0
				100	1.4	0.2	2.5	-0.1	0.6	0.0
				107	0.8	0.3	-1.0	1.1	1.1	0.0
				106	1.0	0.5	5.0	1.0	-0.4	0.0
			Min	99	-0.9	-0.2	0.1	-0.1	-1.3	0.0
				100	-1.2	-0.4	-1.8	-0.2	-1.7	0.0
				107	-0.9	-0.5	-5.7	-0.1	-1.8	0.0
				106	-1.2	-0.3	1.7	0.4	-1.1	0.0
		RC ENV~2	Max	99	0.1	0.1	3.4	0.1	-0.8	0.0
				100	0.3	-0.1	0.6	-0.1	-0.5	0.0
				107	-0.0	-0.0	-2.9	0.5	-0.3	0.0
				106	-0.0	0.2	3.7	0.7	-0.7	0.0
			Min	99	-0.0	0.0	2.9	0.0	-0.9	0.0
				100	0.0	-0.1	0.2	-0.2	-0.9	0.0
				107	-0.1	-0.1	-4.1	0.4	-0.7	0.0
				106	-0.2	0.1	2.8	0.6	-0.8	0.0
87	1	1	SX (RS)	100	0.1	0.1	0.3	0.0	0.3	0.0
				29	0.1	0.1	0.6	0.0	0.0	0.0
				108	0.2	0.0	1.7	0.0	0.6	0.0
				107	0.1	0.1	2.0	0.1	0.4	0.0
			SY (RS)	100	1.3	0.4	2.5	0.0	1.2	0.0
				29	1.6	0.1	0.2	0.0	2.0	0.0
				108	1.1	0.5	3.8	0.8	2.1	0.0
				107	1.4	0.1	1.2	0.7	0.9	0.0
		RC ENV~1	Max	100	1.2	0.5	5.0	0.2	1.7	0.0
				29	1.8	0.1	2.8	0.0	0.7	0.0
				108	1.2	0.4	1.5	1.3	0.8	0.0
				107	1.3	0.1	3.4	1.6	1.8	0.0
			Min	100	-1.4	-0.3	0.1	0.1	-0.6	0.0
				29	-1.4	-0.1	1.0	-0.1	-3.3	0.0
				108	-1.0	-0.6	-6.1	-0.3	-3.5	0.0
				107	-1.6	-0.1	-0.5	0.1	-0.2	0.0
		RC ENV~2	Max	100	-0.1	0.1	3.0	0.2	0.9	0.0
				29	0.4	0.0	2.0	-0.0	-1.3	0.0
				108	0.2	-0.1	-2.0	0.6	-1.2	0.0
				107	-0.1	0.0	2.3	1.0	1.3	0.0
			Min	100	-0.2	0.1	2.4	0.1	0.5	0.0
				29	0.2	-0.0	1.5	-0.0	-1.9	0.0
				108	0.0	-0.2	-3.5	0.5	-2.1	0.0
				107	-0.3	0.0	1.0	0.8	0.7	0.0
88	1	1	SX (RS)	44	0.4	0.7	0.9	0.2	1.4	0.0
				101	2.0	0.7	3.2	0.3	1.8	0.0
				109	1.5	0.9	2.8	0.4	1.8	0.0
				5	3.1	0.9	5.0	1.0	5.6	0.0
			SY (RS)	44	0.8	0.4	1.6	0.2	0.6	0.0
				101	1.0	1.2	4.2	0.5	0.5	0.0
				109	0.6	0.5	1.0	0.3	0.3	0.0
				5	1.1	2.1	4.9	3.7	1.4	0.0
		RC ENV~1	Max	44	0.4	0.9	7.1	-0.1	4.2	0.0
				101	1.9	1.5	12.9	0.2	1.1	0.0
				109	2.0	1.0	3.5	4.2	1.1	0.0
				5	3.2	1.5	-3.8	7.4	8.3	0.0

				Min	44	-1.1	-0.5	3.2	-0.5	0.7	0.0
					101	-2.1	-0.9	2.5	-0.8	-2.4	0.0
					109	-1.1	-0.8	-2.1	2.2	-2.6	0.0
					5	-3.1	-2.7	-18.2	-0.0	-3.0	-0.0
			RC ENV~2	Max	44	-0.2	0.5	5.4	-0.2	3.1	0.0
					101	0.8	0.7	9.4	-0.2	-0.1	0.0
					109	1.2	0.6	2.2	3.1	-0.1	0.0
					5	1.4	-0.1	-7.1	5.1	5.4	-0.0
				Min	44	-0.6	-0.1	4.8	-0.4	1.6	0.0
					101	-1.0	-0.1	5.6	-0.5	-1.4	0.0
					109	-0.2	-0.3	-0.1	2.4	-1.4	0.0
					5	-1.4	-1.3	-13.2	3.3	0.8	-0.0
89	1	1	SX (RS)		101	0.9	0.4	0.9	0.1	1.8	0.0
					102	1.1	0.2	0.7	0.1	1.2	0.0
					110	1.0	0.3	1.1	0.5	1.3	0.0
					109	1.2	0.3	2.6	0.4	1.6	0.0
			SY (RS)		101	0.1	0.7	3.5	0.0	0.1	0.0
					102	0.7	0.2	0.7	0.3	0.4	0.0
					110	0.2	0.5	0.9	0.7	0.4	0.0
					109	0.6	0.1	2.5	0.9	0.3	0.0
			RC ENV~1	Max	101	0.8	0.4	4.4	-0.5	2.7	0.0
					102	1.1	0.2	7.0	0.0	1.6	0.0
					110	1.2	0.7	2.7	2.2	1.5	0.0
					109	1.2	0.3	-0.6	2.3	2.4	0.0
				Min	101	-1.1	-1.0	-2.6	-0.9	-0.9	0.0
					102	-1.1	-0.2	3.6	-0.6	-0.7	0.0
					110	-0.8	-0.3	0.2	0.8	-1.1	0.0
					109	-1.2	-0.2	-5.8	0.5	-0.9	0.0
			RC ENV~2	Max	101	0.2	-0.0	0.9	-0.6	1.6	0.0
					102	0.5	0.1	5.2	-0.3	0.9	0.0
					110	0.7	0.4	1.9	1.7	0.8	0.0
					109	0.5	0.2	-2.4	1.7	1.4	0.0
				Min	101	-0.6	-0.5	-0.1	-0.7	0.3	0.0
					102	-0.5	-0.1	4.1	-0.4	0.1	0.0
					110	-0.2	0.0	0.9	1.3	-0.1	0.0
					109	-0.6	-0.0	-4.2	1.3	0.2	0.0
90	1	1	SX (RS)		102	0.7	0.1	0.3	0.3	1.4	0.0
					103	0.7	0.2	0.4	0.1	0.9	0.0
					111	0.7	0.1	0.9	0.3	1.0	0.0
					110	0.7	0.2	1.0	0.2	1.2	0.0
			SY (RS)		102	0.1	0.3	1.1	0.3	0.4	0.0
					103	0.6	0.3	1.0	0.3	0.4	0.0
					111	0.1	0.3	0.9	0.4	0.4	0.0
					110	0.6	0.3	0.9	0.3	0.3	0.0
			RC ENV~1	Max	102	0.6	0.2	2.0	-0.0	1.2	0.0
					103	0.7	0.3	5.2	0.2	2.6	0.0
					111	0.9	0.4	3.7	1.3	2.6	0.0
					110	0.7	0.3	-2.4	1.5	1.0	0.0
				Min	102	-0.9	-0.4	-0.2	-0.6	-1.6	0.0
					103	-0.7	-0.3	2.3	-0.4	0.6	0.0
					111	-0.6	-0.2	1.6	0.4	0.3	0.0
					110	-0.7	-0.3	-4.8	0.7	-1.4	0.0
			RC ENV~2	Max	102	0.2	-0.0	0.9	-0.2	0.2	0.0
					103	0.3	0.1	3.9	-0.1	1.9	0.0
					111	0.5	0.2	2.8	0.9	1.9	0.0
					110	0.3	0.0	-3.0	1.1	0.2	0.0

				Min	102	-0.5	-0.2	0.2	-0.4	-0.8	0.0
					103	-0.3	-0.0	3.2	-0.2	1.3	0.0
					111	-0.2	0.0	2.2	0.7	1.2	0.0
					110	-0.3	-0.1	-3.7	1.0	-0.7	0.0
91	1	1	SX (RS)		103	0.6	0.0	0.4	0.2	1.0	0.0
					104	0.4	0.1	0.4	0.0	0.6	0.0
					112	0.6	0.1	0.7	0.2	0.7	0.0
					111	0.4	0.2	0.8	0.1	0.9	0.0
			SY (RS)		103	0.3	0.2	1.0	0.3	0.5	0.0
					104	0.7	0.2	1.0	0.4	0.5	0.0
					112	0.2	0.2	1.0	0.4	0.4	0.0
					111	0.6	0.2	1.0	0.5	0.4	0.0
			RC ENV~1	Max	103	0.5	0.1	2.0	0.0	-0.2	0.0
					104	0.7	0.2	2.8	0.3	3.0	0.0
					112	0.6	0.2	2.5	0.9	3.0	0.0
					111	0.6	0.2	0.2	0.9	-0.4	0.0
				Min	103	-0.6	-0.2	-0.1	-0.5	-2.5	0.0
					104	-0.7	-0.2	0.7	-0.4	1.2	0.0
					112	-0.5	-0.1	0.5	0.1	1.0	0.0
					111	-0.6	-0.2	-1.8	-0.1	-2.5	0.0
			RC ENV~2	Max	103	0.2	-0.0	1.0	-0.1	-1.1	0.0
					104	0.2	0.0	2.1	-0.0	2.2	0.0
					112	0.3	0.1	1.7	0.5	2.2	0.0
					111	0.2	0.0	-0.3	0.4	-1.2	0.0
				Min	103	-0.3	-0.1	0.4	-0.3	-1.8	0.0
					104	-0.2	-0.0	1.7	-0.1	1.8	0.0
					112	-0.2	0.0	1.2	0.3	1.6	0.0
					111	-0.2	-0.0	-0.9	0.3	-1.8	0.0
92	1	1	SX (RS)		104	0.4	0.1	0.4	0.1	0.7	0.0
					105	0.2	0.1	0.5	0.0	0.3	0.0
					113	0.4	0.1	0.7	0.1	0.4	0.0
					112	0.2	0.1	0.7	0.0	0.7	0.0
			SY (RS)		104	0.5	0.2	1.1	0.2	0.5	0.0
					105	0.7	0.2	1.6	0.4	0.4	0.0
					113	0.4	0.2	1.3	0.3	0.4	0.0
					112	0.7	0.2	0.8	0.6	0.4	0.0
			RC ENV~1	Max	104	0.4	0.2	2.9	0.0	-1.0	0.0
					105	0.7	0.2	2.2	0.3	2.6	0.0
					113	0.4	0.2	1.9	0.8	2.5	0.0
					112	0.7	0.2	1.2	0.9	-1.2	0.0
				Min	104	-0.5	-0.2	0.8	-0.4	-3.0	0.0
					105	-0.7	-0.2	-0.9	-0.5	1.3	0.0
					113	-0.4	-0.1	-0.7	0.1	1.1	0.0
					112	-0.7	-0.2	-0.6	-0.3	-3.0	0.0
			RC ENV~2	Max	104	0.1	-0.0	1.9	-0.1	-1.6	0.0
					105	0.2	-0.0	0.8	-0.1	2.0	0.0
					113	0.2	0.1	0.7	0.5	1.9	0.0
					112	0.1	0.0	0.8	0.3	-1.8	0.0
				Min	104	-0.2	-0.0	1.6	-0.2	-2.2	0.0
					105	-0.1	-0.0	0.5	-0.1	1.7	0.0
					113	-0.1	0.0	0.2	0.3	1.5	0.0
					112	-0.2	-0.0	0.2	0.2	-2.2	0.0
93	1	1	SX (RS)		105	0.3	0.1	0.5	0.1	0.4	0.0
					106	0.1	0.1	0.5	0.2	0.1	0.0
					114	0.3	0.2	0.8	0.1	0.1	0.0
					113	0.1	0.1	0.8	0.1	0.3	0.0

			SY (RS)	105	0.6	0.2	1.5	0.2	0.5	0.0
				106	0.9	0.3	1.7	0.4	0.3	0.0
				114	0.5	0.2	1.1	0.3	0.6	0.0
				113	0.8	0.3	0.9	0.6	0.4	0.0
		RC ENV~1	Max	105	0.6	0.2	4.5	-0.1	-1.1	0.0
				106	0.9	0.2	1.5	0.0	1.4	0.0
				114	0.5	0.3	0.3	1.1	1.5	0.0
				113	0.7	0.4	2.8	1.1	-1.3	0.0
			Min	105	-0.6	-0.3	1.4	-0.6	-2.6	0.0
				106	-0.8	-0.4	-2.0	-0.7	0.6	0.0
				114	-0.5	-0.2	-1.8	0.5	0.3	0.0
				113	-0.8	-0.2	0.4	-0.1	-2.7	0.0
		RC ENV~2	Max	105	0.1	0.0	3.2	-0.3	-1.6	0.0
				106	0.1	-0.1	-0.1	-0.3	1.0	0.0
				114	0.1	0.0	-0.7	0.8	1.0	0.0
				113	0.0	0.1	2.0	0.6	-1.7	0.0
			Min	105	-0.1	-0.0	2.8	-0.3	-2.0	0.0
				106	-0.0	-0.1	-0.6	-0.4	0.9	0.0
				114	-0.1	-0.0	-1.3	0.7	0.9	0.0
				113	-0.1	0.1	1.3	0.4	-2.0	0.0
94	1	1	SX (RS)	106	0.3	0.2	0.9	0.0	0.1	0.0
				107	0.3	0.2	0.2	0.1	0.6	0.0
				115	0.3	0.2	2.1	0.4	0.5	0.0
				114	0.3	0.1	1.0	0.4	0.1	0.0
			SY (RS)	106	0.7	0.1	0.8	0.6	0.5	0.0
				107	0.9	0.9	6.4	0.3	0.8	0.0
				115	0.6	0.1	4.1	1.4	0.9	0.0
				114	0.9	0.6	1.6	0.9	0.3	0.0
		RC ENV~1	Max	106	0.7	0.1	6.3	0.0	-0.6	0.0
				107	1.0	0.7	5.9	-0.5	0.1	0.0
				115	0.5	0.3	0.5	2.8	0.4	0.0
				114	0.8	0.8	5.9	2.1	-0.8	0.0
			Min	106	-0.6	-0.2	3.3	-1.1	-1.7	0.0
				107	-0.9	-1.1	-6.9	-1.5	-1.6	0.0
				115	-0.6	-0.1	-7.7	0.0	-1.4	0.0
				114	-0.9	-0.5	1.7	0.2	-1.6	0.0
		RC ENV~2	Max	106	0.1	-0.0	4.8	-0.5	-1.1	0.0
				107	0.1	-0.2	-0.4	-0.9	-0.5	0.0
				115	-0.0	0.2	-3.3	1.6	-0.3	0.0
				114	-0.0	0.3	4.4	1.4	-1.1	0.0
			Min	106	0.1	-0.1	4.1	-0.6	-1.3	0.0
				107	0.1	-0.4	-1.4	-1.1	-1.1	0.0
				115	-0.1	0.0	-4.7	1.3	-0.8	0.0
				114	-0.1	0.1	3.2	1.1	-1.2	0.0
95	1	1	SX (RS)	107	0.7	0.3	2.9	0.2	0.6	0.0
				108	0.1	0.3	0.9	0.1	0.6	0.0
				6	1.4	0.4	4.3	0.8	3.5	0.0
				115	0.7	0.4	2.3	0.4	0.6	0.0
			SY (RS)	107	0.9	1.4	7.8	1.0	1.3	0.0
				108	1.5	0.6	4.1	0.8	2.0	0.0
				6	1.0	2.5	10.8	7.5	3.2	0.0
				115	1.3	0.6	1.1	1.1	0.3	0.0
		RC ENV~1	Max	107	1.1	1.6	15.7	0.6	1.5	0.0
				108	1.8	0.7	9.4	0.2	-0.5	0.0
				6	1.1	2.0	-1.7	12.0	0.4	0.0
				115	1.1	0.7	5.9	5.1	0.9	0.0

				Min	107	-0.7	-1.1	0.2	-1.4	-1.0	0.0
					108	-1.3	-0.5	1.3	-1.4	-5.0	0.0
					6	-1.6	-3.0	-23.7	-3.0	-6.8	-0.0
					115	-1.5	-0.4	0.3	2.1	-0.3	0.0
			RC ENV~2	Max	107	0.4	0.5	10.2	-0.3	0.6	0.0
					108	0.4	0.2	6.6	-0.6	-2.5	0.0
					6	0.1	-0.4	-12.3	5.8	-2.4	0.0
					115	-0.0	0.3	4.2	3.8	0.6	0.0
				Min	107	0.0	0.2	7.5	-0.5	0.1	0.0
					108	0.2	-0.0	5.3	-0.7	-3.6	0.0
					6	-0.6	-0.9	-17.4	4.5	-4.9	-0.0
					115	-0.4	0.1	2.4	3.1	0.1	0.0
96	1	1	SX (RS)		116	0.2	0.1	0.3	0.0	0.3	0.0
					117	0.2	0.1	0.4	0.0	0.1	0.0
					124	0.1	0.1	0.5	0.2	0.1	0.0
					123	0.2	0.1	1.1	0.2	0.4	0.0
			SY (RS)		116	1.3	0.3	2.1	0.0	1.2	0.0
					117	0.9	0.3	3.0	0.2	0.4	0.0
					124	1.1	0.4	1.1	0.0	0.3	0.0
					123	0.8	0.4	1.9	0.6	1.4	0.0
			RC ENV~1	Max	116	1.2	0.2	2.2	-0.0	1.7	0.0
					117	0.9	0.3	6.3	0.2	1.3	0.0
					124	1.2	0.5	4.8	0.9	1.3	0.0
					123	0.9	0.3	-0.9	1.1	1.9	0.0
				Min	116	-1.4	-0.4	-2.1	-0.1	-0.6	0.0
					117	-0.9	-0.2	0.4	-0.2	0.4	0.0
					124	-1.0	-0.3	1.6	0.4	0.5	0.0
					123	-0.8	-0.5	-5.4	-0.1	-1.0	0.0
			RC ENV~2	Max	116	-0.1	-0.0	0.1	-0.1	0.9	0.0
					117	0.0	0.1	3.9	0.0	1.0	0.0
					124	0.2	0.2	3.6	0.7	1.0	0.0
					123	0.1	-0.0	-2.6	0.6	0.8	0.0
				Min	116	-0.3	-0.1	-0.4	-0.1	0.4	0.0
					117	-0.0	0.0	3.3	-0.0	0.8	0.0
					124	0.1	0.1	2.7	0.5	0.8	0.0
					123	0.0	-0.1	-4.0	0.5	0.3	0.0
97	1	1	SX (RS)		117	0.3	0.1	0.3	0.0	0.1	0.0
					118	0.3	0.0	0.5	0.0	0.3	0.0
					125	0.2	0.1	0.7	0.1	0.3	0.0
					124	0.3	0.1	0.9	0.0	0.1	0.0
			SY (RS)		117	0.9	0.2	2.7	0.2	0.4	0.0
					118	0.9	0.1	2.5	0.2	0.4	0.0
					125	0.9	0.1	0.4	0.3	0.5	0.0
					124	0.8	0.0	0.4	0.2	0.6	0.0
			RC ENV~1	Max	117	0.9	0.1	2.3	0.2	-0.4	0.0
					118	0.8	0.1	5.3	0.2	2.6	0.0
					125	0.9	0.2	3.1	0.5	2.7	0.0
					124	0.8	0.1	0.0	0.6	-0.2	0.0
				Min	117	-0.9	-0.2	-3.1	-0.2	-1.3	0.0
					118	-0.9	-0.1	0.4	-0.3	1.2	0.0
					125	-0.9	-0.1	1.0	-0.1	1.2	0.0
					124	-0.8	-0.1	-1.9	0.1	-1.5	0.0
			RC ENV~2	Max	117	0.1	-0.0	-0.4	0.0	-0.8	0.0
					118	0.0	0.0	3.2	-0.1	2.0	0.0
					125	0.1	0.1	2.3	0.2	2.0	0.0
					124	0.1	0.0	-0.6	0.3	-0.8	0.0

				Min	117	-0.1	-0.1	-0.8	-0.0	-1.0	0.0
					118	-0.1	-0.0	2.8	-0.1	1.6	0.0
					125	-0.0	0.0	1.6	0.1	1.7	0.0
					124	-0.0	-0.0	-1.4	0.3	-0.9	0.0
98	1	1	SX (RS)		118	0.4	0.0	0.4	0.0	0.3	0.0
					119	0.5	0.0	0.5	0.0	0.7	0.0
					126	0.4	0.1	0.7	0.0	0.7	0.0
					125	0.4	0.0	0.7	0.1	0.4	0.0
			SY (RS)		118	0.9	0.1	2.2	0.2	0.4	0.0
					119	0.8	0.1	2.0	0.2	0.5	0.0
					126	0.8	0.1	0.5	0.3	0.6	0.0
					125	0.7	0.1	0.6	0.2	0.5	0.0
			RC ENV~1	Max	118	0.9	0.1	2.3	0.3	-1.2	0.0
					119	0.8	0.1	4.0	0.1	3.1	0.0
					126	0.8	0.1	1.5	0.4	3.2	0.0
					125	0.7	0.1	1.4	0.4	-1.0	0.0
				Min	118	-0.8	-0.1	-2.2	-0.2	-2.6	0.0
					119	-0.9	-0.1	0.0	-0.3	1.1	0.0
					126	-0.8	-0.1	-0.1	-0.3	1.3	0.0
					125	-0.7	-0.1	-0.0	0.0	-2.5	0.0
			RC ENV~2	Max	118	0.1	0.0	0.1	0.1	-1.6	0.0
					119	0.1	-0.0	2.2	-0.1	2.3	0.0
					126	0.1	0.0	1.1	0.0	2.4	0.0
					125	0.1	0.0	0.9	0.2	-1.5	0.0
				Min	118	-0.1	-0.0	-0.2	0.1	-2.0	0.0
					119	-0.2	-0.0	2.0	-0.1	1.7	0.0
					126	-0.1	-0.0	0.4	-0.0	1.9	0.0
					125	-0.1	-0.0	0.4	0.2	-1.9	0.0
99	1	1	SX (RS)		119	0.6	0.0	0.4	0.0	0.7	0.0
					120	0.6	0.0	0.4	0.1	1.0	0.0
					127	0.5	0.0	0.8	0.0	1.0	0.0
					126	0.6	0.0	0.6	0.1	0.7	0.0
			SY (RS)		119	0.8	0.1	1.8	0.2	0.5	0.0
					120	0.7	0.1	1.7	0.2	0.5	0.0
					127	0.7	0.1	0.6	0.3	0.5	0.0
					126	0.6	0.1	0.7	0.2	0.5	0.0
			RC ENV~1	Max	119	0.9	0.1	2.8	0.3	-1.1	0.0
					120	0.7	0.0	2.9	0.1	2.6	0.0
					127	0.7	0.1	0.3	0.3	2.7	0.0
					126	0.6	0.1	2.7	0.4	-0.9	0.0
				Min	119	-0.8	-0.1	-0.9	-0.1	-3.1	0.0
					120	-0.7	-0.1	-0.6	-0.3	0.3	0.0
					127	-0.7	-0.1	-1.3	-0.3	0.5	0.0
					126	-0.6	-0.0	1.1	-0.0	-3.0	0.0
			RC ENV~2	Max	119	0.2	0.0	1.1	0.1	-1.7	0.0
					120	0.2	-0.0	1.2	-0.1	1.9	0.0
					127	0.2	-0.0	-0.2	0.0	2.0	0.0
					126	0.2	0.0	2.1	0.2	-1.6	0.0
				Min	119	-0.1	0.0	0.8	0.1	-2.3	0.0
					120	-0.2	-0.0	0.8	-0.1	1.2	0.0
					127	-0.2	-0.0	-0.8	-0.0	1.4	0.0
					126	-0.2	0.0	1.6	0.1	-2.2	0.0
100	1	1	SX (RS)		120	0.7	0.0	0.4	0.1	1.0	0.0
					121	0.6	0.2	0.4	0.1	1.4	0.0
					128	0.7	0.1	1.0	0.0	1.2	0.0
					127	0.6	0.1	0.7	0.2	1.1	0.0

			SY (RS)	120	0.7	0.1	1.7	0.2	0.5	0.0
				121	0.5	0.2	1.8	0.2	0.4	0.0
				128	0.6	0.1	0.5	0.2	0.4	0.0
				127	0.4	0.1	0.6	0.2	0.6	0.0
			RC ENV~1 Max	120	0.7	0.1	3.5	0.3	-0.3	0.0
				121	0.6	0.1	2.4	0.1	1.8	0.0
				128	0.7	0.1	-0.5	0.3	1.8	0.0
				127	0.6	0.2	3.8	0.6	-0.1	0.0
			Min	120	-0.7	-0.1	0.1	-0.1	-2.6	0.0
				121	-0.6	-0.2	-1.2	-0.3	-0.9	0.0
				128	-0.7	-0.1	-2.6	-0.1	-0.6	0.0
				127	-0.7	-0.1	1.7	0.1	-2.5	0.0
			RC ENV~2 Max	120	0.2	0.0	2.3	0.1	-1.2	0.0
				121	0.2	0.0	0.6	-0.1	1.0	0.0
				128	0.3	0.0	-1.2	0.1	1.1	0.0
				127	0.1	0.1	2.8	0.4	-1.0	0.0
			Min	120	-0.2	0.0	1.8	0.1	-1.9	0.0
				121	-0.2	-0.1	0.0	-0.1	0.1	0.0
				128	-0.2	-0.0	-1.9	0.1	0.3	0.0
				127	-0.3	-0.0	2.2	0.2	-1.8	0.0
101	1	1	SX (RS)	121	0.7	0.2	0.5	0.1	1.4	0.0
				122	0.3	0.1	1.2	0.1	1.4	0.0
				129	1.0	0.3	1.1	0.2	1.4	0.0
				128	0.6	0.2	0.3	0.3	1.5	0.0
			SY (RS)	121	0.5	0.3	1.9	0.2	0.4	0.0
				122	0.1	0.2	1.6	0.1	0.3	0.0
				129	0.6	0.4	0.8	0.3	0.5	0.0
				128	0.1	0.3	0.8	0.1	0.4	0.0
			RC ENV~1 Max	121	0.7	0.3	4.3	0.3	0.9	0.0
				122	0.5	0.2	2.3	0.0	0.8	0.0
				129	1.0	0.3	-1.1	0.6	0.9	0.0
				128	0.4	0.4	4.0	0.8	1.2	0.0
			Min	121	-0.7	-0.2	0.5	-0.1	-1.8	0.0
				122	-0.2	-0.3	-1.0	-0.2	-2.0	0.0
				129	-1.0	-0.4	-4.2	-0.0	-2.0	0.0
				128	-0.7	-0.2	1.8	0.2	-1.8	0.0
			RC ENV~2 Max	121	0.2	0.1	3.2	0.1	-0.1	0.0
				122	0.3	-0.0	1.0	-0.0	-0.2	0.0
				129	0.4	0.1	-2.0	0.4	-0.0	0.0
				128	0.0	0.2	3.0	0.6	0.1	0.0
			Min	121	-0.3	-0.0	2.4	0.1	-1.0	0.0
				122	0.1	-0.1	-0.1	-0.1	-1.1	0.0
				129	-0.3	-0.2	-3.1	0.2	-1.1	0.0
				128	-0.4	-0.0	2.5	0.4	-0.9	0.0
102	1	1	SX (RS)	122	0.4	0.1	1.4	0.1	1.4	0.0
				30	0.3	0.1	1.6	0.0	0.6	0.0
				47	0.3	0.1	3.0	0.1	0.5	0.0
				129	0.1	0.0	3.3	0.2	1.5	0.0
			SY (RS)	122	0.1	0.3	1.8	0.1	0.3	0.0
				30	0.5	0.0	0.8	0.1	0.7	0.0
				47	0.0	0.4	1.6	0.4	0.8	0.0
				129	0.4	0.1	0.7	0.2	0.1	0.0
			RC ENV~1 Max	122	0.3	0.4	4.6	0.2	2.0	0.0
				30	0.8	0.1	2.8	0.1	-0.5	0.0
				47	0.4	0.3	1.8	0.8	-0.5	0.0

					129	0.2	0.1	4.3	0.9	2.3	0.0
				Min	122	-0.6	-0.3	0.6	-0.0	-0.8	0.0
					30	-0.2	-0.1	-0.5	-0.0	-2.2	0.0
					47	-0.2	-0.5	-4.2	0.0	-2.3	0.0
					129	-0.7	-0.0	-2.3	0.3	-0.7	0.0
			RC ENV~2	Max	122	-0.0	0.1	3.4	0.1	1.1	0.0
					30	0.4	0.0	1.7	0.1	-0.9	0.0
					47	0.2	-0.1	-0.4	0.5	-1.3	0.0
					129	-0.2	0.0	2.2	0.7	1.4	0.0
				Min	122	-0.3	0.0	2.1	0.0	0.2	0.0
					30	0.2	-0.0	0.4	0.0	-1.6	0.0
					47	0.0	-0.2	-2.4	0.4	-1.7	0.0
					129	-0.3	0.0	0.0	0.5	0.3	0.0
103	1	1	SX (RS)		108	0.1	0.3	0.9	0.1	0.6	0.0
					123	0.7	0.3	2.9	0.2	0.6	0.0
					130	0.7	0.4	2.3	0.4	0.6	0.0
					6	1.4	0.4	4.3	0.8	3.5	0.0
			SY (RS)		108	1.5	0.6	4.1	0.8	2.0	0.0
					123	0.9	1.4	7.8	1.0	1.3	0.0
					130	1.3	0.6	1.1	1.1	0.3	0.0
					6	1.0	2.5	10.8	7.5	3.2	0.0
			RC ENV~1	Max	108	1.3	0.7	9.2	0.3	4.9	0.0
					123	0.7	1.6	15.9	0.5	1.0	0.0
					130	1.5	0.7	5.5	5.1	0.3	0.0
					6	1.6	2.0	-1.6	12.1	7.0	0.0
				Min	108	-1.8	-0.5	1.1	-1.3	0.5	0.0
					123	-1.1	-1.1	0.4	-1.5	-1.6	0.0
					130	-1.1	-0.4	0.1	2.0	-0.8	0.0
					6	-1.1	-3.0	-23.6	-2.9	-0.3	-0.0
			RC ENV~2	Max	108	-0.2	0.2	6.2	-0.5	3.6	0.0
					123	0.1	0.5	10.7	-0.4	-0.1	0.0
					130	0.4	0.3	3.9	3.8	-0.1	0.0
					6	0.7	-0.3	-11.7	6.0	5.1	0.0
				Min	108	-0.4	0.0	5.1	-0.6	2.5	0.0
					123	-0.5	0.1	7.6	-0.6	-0.7	0.0
					130	-0.0	0.0	2.0	3.1	-0.5	0.0
					6	-0.2	-0.9	-17.3	4.4	2.4	-0.0
104	1	1	SX (RS)		123	0.3	0.2	0.2	0.1	0.6	0.0
					124	0.3	0.2	0.9	0.0	0.1	0.0
					131	0.3	0.1	1.0	0.4	0.1	0.0
					130	0.3	0.2	2.1	0.4	0.5	0.0
			SY (RS)		123	0.9	0.9	6.4	0.3	0.8	0.0
					124	0.7	0.1	0.8	0.6	0.5	0.0
					131	0.9	0.6	1.6	0.9	0.3	0.0
					130	0.6	0.1	4.1	1.4	0.9	0.0
			RC ENV~1	Max	123	0.9	0.7	5.7	-0.5	1.5	0.0
					124	0.6	0.1	6.7	0.0	1.6	0.0
					131	0.9	0.8	5.6	2.1	1.8	0.0
					130	0.6	0.3	0.7	2.9	1.4	0.0
				Min	123	-1.0	-1.1	-7.1	-1.4	-0.1	0.0
					124	-0.7	-0.2	3.5	-1.2	0.5	0.0
					131	-0.8	-0.5	1.5	0.2	0.8	0.0
					130	-0.5	-0.1	-7.5	0.0	-0.3	0.0
			RC ENV~2	Max	123	0.0	-0.1	-0.7	-0.8	1.1	0.0
					124	0.0	-0.0	5.1	-0.6	1.2	0.0
					131	0.2	0.3	4.1	1.2	1.4	0.0

				130	0.2	0.2	-3.0	1.6	0.9	0.0
			Min	123	-0.1	-0.4	-1.7	-1.0	0.4	0.0
				124	-0.1	-0.1	4.4	-0.7	1.0	0.0
				131	-0.0	0.1	2.9	1.0	1.2	0.0
				130	-0.0	0.0	-4.3	1.4	0.4	0.0
105	1	1	SX (RS)	124	0.1	0.1	0.5	0.2	0.1	0.0
				125	0.3	0.1	0.5	0.1	0.4	0.0
				132	0.1	0.1	0.8	0.1	0.3	0.0
				131	0.3	0.2	0.8	0.1	0.1	0.0
			SY (RS)	124	0.9	0.3	1.7	0.4	0.3	0.0
				125	0.6	0.2	1.5	0.2	0.5	0.0
				132	0.8	0.3	0.9	0.6	0.4	0.0
				131	0.5	0.2	1.1	0.3	0.6	0.0
		RC ENV~1	Max	124	0.8	0.3	1.4	0.1	-0.7	0.0
				125	0.6	0.2	4.6	-0.1	2.6	0.0
				132	0.8	0.4	2.5	1.0	2.9	0.0
				131	0.5	0.3	0.5	1.1	-0.2	0.0
			Min	124	-0.9	-0.4	-2.1	-0.7	-1.6	0.0
				125	-0.6	-0.3	1.5	-0.6	1.1	0.0
				132	-0.7	-0.3	0.3	-0.2	1.4	0.0
				131	-0.5	-0.2	-1.6	0.5	-1.5	0.0
		RC ENV~2	Max	124	-0.0	-0.0	-0.4	-0.2	-1.0	0.0
				125	0.0	0.0	3.4	-0.3	1.9	0.0
				132	0.1	0.1	1.8	0.4	2.1	0.0
				131	0.0	0.1	-0.3	0.8	-0.8	0.0
			Min	124	-0.1	-0.1	-0.9	-0.4	-1.2	0.0
				125	-0.0	-0.0	3.1	-0.4	1.5	0.0
				132	0.0	0.1	1.0	0.3	1.8	0.0
				131	-0.0	-0.0	-1.0	0.8	-0.9	0.0
106	1	1	SX (RS)	125	0.2	0.1	0.5	0.0	0.3	0.0
				126	0.4	0.1	0.4	0.1	0.7	0.0
				133	0.2	0.1	0.7	0.0	0.7	0.0
				132	0.4	0.1	0.7	0.1	0.4	0.0
			SY (RS)	125	0.7	0.2	1.6	0.4	0.4	0.0
				126	0.5	0.2	1.1	0.2	0.5	0.0
				133	0.7	0.2	0.8	0.6	0.4	0.0
				132	0.4	0.2	1.3	0.3	0.4	0.0
		RC ENV~1	Max	125	0.7	0.2	2.0	0.4	-1.3	0.0
				126	0.5	0.2	3.1	0.0	2.9	0.0
				133	0.7	0.2	1.0	0.8	3.1	0.0
				132	0.4	0.2	2.0	0.8	-1.1	0.0
			Min	125	-0.7	-0.2	-1.1	-0.4	-2.8	0.0
				126	-0.4	-0.2	0.9	-0.5	0.9	0.0
				133	-0.7	-0.2	-0.7	-0.3	1.2	0.0
				132	-0.4	-0.1	-0.5	0.1	-2.5	0.0
		RC ENV~2	Max	125	0.1	-0.0	0.5	0.0	-1.7	0.0
				126	0.2	-0.0	2.1	-0.1	2.2	0.0
				133	0.1	0.0	0.6	0.2	2.3	0.0
				132	0.1	0.1	1.1	0.5	-1.5	0.0
			Min	125	-0.1	-0.0	0.1	-0.0	-2.1	0.0
				126	-0.1	-0.1	1.9	-0.2	1.6	0.0
				133	-0.0	-0.0	-0.1	0.1	1.8	0.0
				132	-0.1	0.0	0.5	0.3	-1.8	0.0
107	1	1	SX (RS)	126	0.4	0.1	0.4	0.0	0.6	0.0
				127	0.6	0.0	0.4	0.2	1.0	0.0
				134	0.4	0.2	0.8	0.1	0.9	0.0

					133	0.6	0.1	0.7	0.2	0.7	0.0
				SY (RS)	126	0.7	0.2	1.0	0.4	0.5	0.0
					127	0.3	0.2	1.0	0.3	0.5	0.0
					134	0.6	0.2	1.0	0.5	0.4	0.0
					133	0.2	0.2	1.0	0.4	0.4	0.0
			RC ENV~1	Max	126	0.7	0.2	2.6	0.4	-1.3	0.0
					127	0.7	0.1	2.1	0.0	2.5	0.0
					134	0.6	0.2	0.1	0.8	2.6	0.0
					133	0.5	0.2	2.7	0.9	-1.0	0.0
				Min	126	-0.7	-0.2	0.5	-0.4	-3.2	0.0
					127	-0.5	-0.2	-0.0	-0.6	0.2	0.0
					134	-0.6	-0.2	-1.9	-0.2	0.5	0.0
					133	-0.6	-0.1	0.7	0.1	-2.9	0.0
			RC ENV~2	Max	126	0.1	0.0	1.7	0.0	-1.9	0.0
					127	0.3	-0.0	1.1	-0.2	1.8	0.0
					134	0.2	0.0	-0.5	0.3	1.9	0.0
					133	0.1	0.1	2.0	0.5	-1.6	0.0
				Min	126	-0.2	-0.0	1.4	-0.0	-2.3	0.0
					127	-0.1	-0.1	0.7	-0.3	1.0	0.0
					134	-0.1	-0.1	-1.2	0.2	1.3	0.0
					133	-0.3	0.0	1.5	0.3	-2.2	0.0
108	1	1		SX (RS)	127	0.7	0.2	0.4	0.1	0.9	0.0
					128	0.7	0.1	0.3	0.3	1.4	0.0
					135	0.7	0.2	1.0	0.2	1.2	0.0
					134	0.7	0.1	0.9	0.3	1.0	0.0
				SY (RS)	127	0.6	0.3	1.0	0.3	0.4	0.0
					128	0.1	0.3	1.1	0.3	0.4	0.0
					135	0.6	0.3	0.9	0.3	0.3	0.0
					134	0.1	0.3	0.9	0.4	0.4	0.0
			RC ENV~1	Max	127	0.7	0.3	4.6	0.2	-0.6	0.0
					128	0.9	0.2	2.1	-0.1	1.5	0.0
					135	0.7	0.3	-2.5	1.3	1.4	0.0
					134	0.6	0.4	4.3	1.3	-0.3	0.0
				Min	127	-0.7	-0.3	2.1	-0.4	-2.7	0.0
					128	-0.6	-0.4	-0.1	-0.7	-1.2	0.0
					135	-0.7	-0.3	-5.2	0.6	-0.9	0.0
					134	-0.9	-0.2	1.8	0.4	-2.6	0.0
			RC ENV~2	Max	127	0.2	0.1	3.5	-0.0	-1.4	0.0
					128	0.4	-0.0	1.0	-0.2	0.8	0.0
					135	0.3	0.0	-3.1	1.0	0.7	0.0
					134	0.1	0.2	3.2	0.9	-1.1	0.0
				Min	127	-0.3	-0.0	3.0	-0.1	-2.0	0.0
					128	-0.1	-0.2	0.4	-0.5	-0.2	0.0
					135	-0.2	-0.1	-3.9	0.9	-0.0	0.0
					134	-0.4	0.0	2.5	0.7	-1.9	0.0
109	1	1		SX (RS)	128	1.1	0.2	0.7	0.1	1.2	0.0
					129	0.9	0.4	0.9	0.1	1.8	0.0
					136	1.2	0.3	2.6	0.4	1.6	0.0
					135	1.0	0.3	1.1	0.5	1.3	0.0
				SY (RS)	128	0.7	0.2	0.7	0.3	0.4	0.0
					129	0.1	0.7	3.5	0.0	0.1	0.0
					136	0.6	0.1	2.5	0.9	0.3	0.0
					135	0.2	0.5	0.9	0.7	0.4	0.0
			RC ENV~1	Max	128	1.1	0.2	6.5	0.1	0.7	0.0
					129	1.1	0.5	4.5	-0.5	0.9	0.0

					136	1.2	0.3	-0.7	2.2	0.9	0.0
					135	0.8	0.7	3.0	2.2	1.1	0.0
				Min	128	-1.1	-0.2	3.4	-0.5	-1.6	0.0
					129	-0.7	-0.9	-2.5	-0.9	-2.7	0.0
					136	-1.2	-0.2	-6.0	0.4	-2.4	0.0
					135	-1.2	-0.3	0.3	0.8	-1.5	0.0
			RC ENV~2	Max	128	0.4	0.1	4.8	-0.2	-0.2	0.0
					129	0.6	-0.0	1.2	-0.6	-0.3	0.0
					136	0.5	0.2	-2.5	1.5	-0.2	0.0
					135	0.2	0.4	2.2	1.7	0.2	0.0
				Min	128	-0.4	-0.1	4.0	-0.3	-1.0	0.0
					129	-0.2	-0.5	0.0	-0.7	-1.5	0.0
					136	-0.4	-0.0	-4.4	1.3	-1.3	0.0
					135	-0.6	0.0	1.2	1.3	-0.8	0.0
110	1	1	SX (RS)		129	2.0	0.7	3.2	0.3	1.8	0.0
					47	0.4	0.7	0.9	0.2	1.4	0.0
					7	3.1	0.9	5.0	1.0	5.6	0.0
					136	1.5	0.9	2.8	0.4	1.8	0.0
			SY (RS)		129	1.0	1.2	4.2	0.5	0.5	0.0
					47	0.8	0.4	1.6	0.2	0.6	0.0
					7	1.1	2.1	4.9	3.7	1.4	0.0
					136	0.6	0.5	1.0	0.3	0.3	0.0
			RC ENV~1	Max	129	2.0	1.5	11.9	0.3	2.4	0.0
					47	1.1	0.9	7.1	-0.1	-0.7	0.0
					7	3.2	1.5	-3.8	7.3	3.0	0.0
					136	1.1	1.0	3.6	4.0	2.6	0.0
				Min	129	-1.9	-0.9	2.3	-0.8	-1.1	0.0
					47	-0.4	-0.5	3.2	-0.5	-4.0	0.0
					7	-3.1	-2.7	-17.4	-0.1	-8.3	-0.0
					136	-2.0	-0.8	-1.9	2.1	-1.1	0.0
			RC ENV~2	Max	129	0.8	0.6	8.8	-0.1	1.2	0.0
					47	0.6	0.5	5.4	-0.2	-1.7	0.0
					7	1.3	-0.1	-7.3	4.7	-0.8	0.0
					136	0.2	0.5	2.4	3.0	1.3	0.0
				Min	129	-0.7	-0.1	5.4	-0.4	0.0	0.0
					47	0.2	-0.1	4.7	-0.3	-2.9	0.0
					7	-1.2	-1.1	-12.7	3.1	-5.0	0.0
					136	-1.1	-0.3	0.2	2.4	0.1	0.0
111	1	1	SX (RS)		45	0.3	0.9	1.9	0.9	0.2	0.0
					5	2.5	1.4	6.7	2.2	5.1	0.0
					139	0.7	0.7	1.3	0.3	0.3	0.0
					138	1.4	1.1	6.0	0.8	0.7	0.0
			SY (RS)		45	0.5	0.3	0.8	0.9	0.2	0.0
					5	0.6	2.3	3.6	4.0	0.7	0.0
					139	0.7	1.2	2.0	1.3	0.3	0.0
					138	0.5	1.4	2.3	1.3	0.2	0.0
			RC ENV~1	Max	45	0.8	0.6	7.0	-0.8	0.6	0.0
					5	2.5	1.4	0.9	2.5	2.6	0.0
					139	0.5	1.8	1.9	2.2	-2.0	0.0
					138	1.3	2.0	10.4	2.1	0.9	0.0
				Min	45	-0.3	-1.2	2.7	-3.1	0.1	0.0
					5	-2.5	-3.2	-12.5	-5.4	-7.6	-0.0
					139	-0.9	-0.6	-2.0	-0.4	-3.7	0.0
					138	-1.5	-0.8	-1.6	-0.5	-0.4	0.0
			RC ENV~2	Max	45	0.5	0.1	5.3	-1.7	0.4	0.0
					5	1.2	-0.2	-5.0	-1.1	-1.2	-0.0

				139	0.2	1.1	0.8	1.0	-2.3	0.0
				138	0.6	1.3	7.0	1.1	0.5	0.0
			Min	45	0.1	-0.7	4.1	-2.3	0.3	0.0
				5	-1.1	-1.9	-8.9	-2.4	-4.5	-0.0
				139	-0.6	0.4	-0.3	0.7	-2.8	0.0
				138	-0.8	-0.0	3.3	0.6	0.1	0.0
112	1	1	SX (RS)	137	0.3	0.2	2.2	0.5	0.1	0.0
				138	0.4	0.6	1.2	0.8	0.4	0.0
				141	0.4	0.0	1.0	0.4	0.1	0.0
				140	0.3	0.5	2.6	0.3	0.2	0.0
			SY (RS)	137	0.1	0.2	0.7	0.9	0.0	0.0
				138	0.2	0.6	0.8	1.0	0.1	0.0
				141	0.2	0.4	0.2	1.0	0.2	0.0
				140	0.1	0.4	0.2	0.9	0.1	0.0
			RC ENV~1 Max	137	0.3	-0.0	3.3	0.1	0.2	0.0
				138	0.5	0.3	0.3	0.2	0.0	0.0
				141	0.4	0.7	1.9	1.5	-0.3	0.0
				140	0.3	1.0	4.8	1.4	0.2	0.0
			Min	137	-0.3	-0.6	-1.2	-1.8	-0.1	0.0
				138	-0.4	-1.2	-2.1	-1.8	-0.9	0.0
				141	-0.5	-0.1	-0.2	-0.5	-0.8	0.0
				140	-0.3	-0.2	-0.6	-0.5	-0.2	0.0
			RC ENV~2 Max	137	0.2	-0.3	1.3	-0.8	0.0	0.0
				138	0.3	-0.0	-0.7	-0.7	-0.4	0.0
				141	0.2	0.5	1.2	0.5	-0.5	0.0
				140	0.1	0.7	3.4	0.5	0.1	0.0
			Min	137	-0.1	-0.4	-0.0	-1.1	-0.0	0.0
				138	-0.2	-0.8	-1.4	-1.1	-0.6	0.0
				141	-0.2	0.3	0.6	0.2	-0.6	0.0
				140	-0.2	0.0	1.9	0.3	-0.0	0.0
113	1	1	SX (RS)	138	0.9	0.1	4.9	0.1	0.0	0.0
				139	0.1	0.6	3.2	0.4	1.2	0.0
				142	0.7	0.1	1.3	0.4	1.0	0.0
				141	0.1	0.7	1.0	0.3	0.4	0.0
			SY (RS)	138	0.3	0.7	0.6	1.3	0.1	0.0
				139	0.2	0.8	2.1	1.2	0.3	0.0
				142	0.2	0.8	0.9	0.9	0.4	0.0
				141	0.1	0.7	0.7	0.8	0.0	0.0
			RC ENV~1 Max	138	0.9	0.3	7.0	0.3	1.0	0.0
				139	0.2	0.4	1.1	0.3	-0.5	0.0
				142	0.6	1.2	1.0	1.5	-0.7	0.0
				141	0.2	1.3	5.5	1.3	1.0	0.0
			Min	138	-0.8	-1.1	-2.8	-2.2	0.6	0.0
				139	-0.2	-1.3	-5.2	-2.1	-3.2	0.0
				142	-0.7	-0.3	-1.5	-0.3	-2.8	0.0
				141	-0.1	-0.3	2.3	-0.3	0.1	0.0
			RC ENV~2 Max	138	0.5	-0.4	3.4	-0.8	0.8	0.0
				139	0.0	-0.1	-1.0	-0.8	-1.3	0.0
				142	0.3	0.7	0.2	0.6	-1.3	0.0
				141	0.1	0.9	4.1	0.5	0.7	0.0
			Min	138	-0.4	-0.6	0.1	-1.1	0.6	0.0
				139	-0.1	-0.9	-3.2	-1.1	-2.3	0.0
				142	-0.4	0.4	-0.7	0.2	-2.1	0.0
				141	-0.0	0.1	3.3	0.3	0.5	0.0
114	1	1	SX (RS)	140	0.2	0.5	2.4	0.3	0.2	0.0
				141	0.0	0.6	0.6	0.4	0.3	0.0

					144	0.2	0.4	0.7	0.6	0.3	0.0
					143	0.1	0.7	2.2	0.5	0.2	0.0
				SY (RS)	140	0.1	0.4	0.2	0.9	0.1	0.0
					141	0.0	0.5	0.8	0.8	0.0	0.0
					144	0.1	0.4	0.6	0.7	0.1	0.0
					143	0.0	0.4	0.2	0.7	0.0	0.0
			RC ENV~1	Max	140	0.2	0.2	3.5	0.5	0.2	0.0
					141	0.0	0.2	0.6	0.4	-0.2	0.0
					144	0.1	0.9	1.0	1.0	-0.1	0.0
					143	0.1	1.2	4.4	0.9	0.2	0.0
				Min	140	-0.2	-1.0	-1.4	-1.4	-0.2	0.0
					141	-0.0	-1.1	-1.0	-1.3	-0.9	0.0
					144	-0.2	-0.1	-0.4	-0.5	-0.8	0.0
					143	-0.1	-0.4	-0.2	-0.4	-0.2	0.0
			RC ENV~2	Max	140	0.1	-0.0	1.3	-0.3	0.0	0.0
					141	0.0	-0.0	-0.0	-0.4	-0.5	0.0
					144	0.0	0.7	0.4	0.3	-0.3	0.0
					143	0.0	0.9	3.1	0.3	0.1	0.0
				Min	140	-0.1	-0.7	-0.1	-0.5	-0.1	0.0
					141	-0.0	-0.8	-0.3	-0.5	-0.7	0.0
					144	-0.1	0.1	-0.1	-0.2	-0.5	0.0
					143	-0.0	-0.0	1.9	-0.0	0.0	0.0
115	1	1		SX (RS)	141	0.3	0.1	1.6	0.5	0.4	0.0
					142	0.2	0.5	1.2	0.3	0.4	0.0
					145	0.3	0.0	1.1	0.5	0.7	0.0
					144	0.2	0.5	1.3	0.3	0.3	0.0
				SY (RS)	141	0.1	0.5	0.2	1.0	0.2	0.0
					142	0.2	0.4	0.8	0.8	0.1	0.0
					145	0.0	0.5	0.7	0.7	0.2	0.0
					144	0.2	0.4	0.4	0.6	0.0	0.0
			RC ENV~1	Max	141	0.3	0.1	3.9	0.5	0.9	0.0
					142	0.1	0.2	-0.1	0.2	-1.2	0.0
					145	0.3	0.9	0.3	1.0	-0.8	0.0
					144	0.3	0.9	4.9	1.0	1.0	0.0
				Min	141	-0.3	-0.9	0.7	-1.5	0.0	0.0
					142	-0.3	-0.9	-2.6	-1.4	-2.5	0.0
					145	-0.3	-0.1	-1.9	-0.3	-2.3	0.0
					144	-0.1	-0.2	1.7	-0.2	0.2	0.0
			RC ENV~2	Max	141	0.2	-0.3	2.5	-0.1	0.6	0.0
					142	-0.0	-0.1	-0.8	-0.4	-1.5	0.0
					145	0.1	0.6	-0.8	0.4	-1.2	0.0
					144	0.1	0.7	3.7	0.4	0.7	0.0
				Min	141	-0.1	-0.6	1.5	-0.5	0.3	0.0
					142	-0.1	-0.6	-1.5	-0.7	-1.9	0.0
					145	-0.1	0.3	-1.3	-0.1	-1.8	0.0
					144	0.0	0.1	3.0	0.2	0.5	0.0
116	1	1		SX (RS)	143	0.0	0.7	2.0	0.5	0.2	0.0
					144	0.1	0.6	0.7	0.5	0.3	0.0
					147	0.0	0.6	0.7	0.6	0.3	0.0
					146	0.1	0.8	2.0	0.5	0.2	0.0
				SY (RS)	143	0.0	0.4	0.2	0.7	0.0	0.0
					144	0.0	0.3	0.7	0.6	0.0	0.0
					147	0.0	0.4	0.7	0.4	0.0	0.0
					146	0.0	0.4	0.3	0.4	0.0	0.0
			RC ENV~1	Max	143	0.0	0.4	3.2	0.4	0.2	0.0

					144	0.0	0.3	1.2	0.3	-0.2	0.0
					147	0.0	1.0	0.5	0.9	-0.1	0.0
					146	0.1	1.2	4.1	0.9	0.3	0.0
				Min	143	-0.0	-1.2	-0.9	-0.9	-0.2	0.0
					144	-0.1	-1.0	-0.4	-0.9	-1.0	0.0
					147	-0.0	-0.2	-1.6	-0.4	-0.7	0.0
					146	-0.0	-0.4	-0.2	-0.2	-0.1	0.0
			RC ENV~2	Max	143	0.0	0.0	1.2	0.0	-0.0	0.0
					144	-0.0	-0.0	0.9	-0.2	-0.4	0.0
					147	0.0	0.7	-0.2	0.3	-0.3	0.0
					146	0.0	0.8	2.9	0.4	0.2	0.0
				Min	143	-0.0	-0.9	0.2	-0.3	-0.1	0.0
					144	-0.0	-0.7	0.3	-0.4	-0.7	0.0
					147	-0.0	0.0	-1.1	-0.2	-0.5	0.0
					146	0.0	-0.1	1.8	0.1	0.1	0.0
117	1	1	SX (RS)		144	0.1	0.3	1.3	0.5	0.4	0.0
					145	0.1	0.4	1.3	0.3	0.6	0.0
					148	0.1	0.2	1.3	0.5	0.7	0.0
					147	0.1	0.4	1.2	0.4	0.4	0.0
			SY (RS)		144	0.1	0.4	0.4	0.7	0.1	0.0
					145	0.1	0.2	0.8	0.6	0.0	0.0
					148	0.1	0.4	0.7	0.4	0.1	0.0
					147	0.1	0.3	0.4	0.4	0.1	0.0
			RC ENV~1	Max	144	0.1	0.0	3.9	0.4	0.8	0.0
					145	0.0	0.1	0.5	0.2	-0.9	0.0
					148	0.1	0.8	-0.1	0.9	-0.8	0.0
					147	0.3	0.7	4.5	0.9	1.2	0.0
				Min	144	-0.1	-0.9	1.3	-1.0	0.0	0.0
					145	-0.3	-0.6	-2.0	-1.1	-2.7	0.0
					148	-0.1	-0.0	-3.6	-0.1	-2.4	0.0
					147	-0.0	-0.2	1.5	0.0	0.2	0.0
			RC ENV~2	Max	144	0.0	-0.2	2.7	0.2	0.5	0.0
					145	-0.1	-0.1	0.1	-0.2	-1.4	0.0
					148	0.0	0.6	-1.3	0.4	-1.3	0.0
					147	0.2	0.4	3.3	0.5	0.9	0.0
				Min	144	-0.0	-0.6	2.0	-0.3	0.3	0.0
					145	-0.2	-0.4	-0.8	-0.4	-2.0	0.0
					148	-0.0	0.2	-2.6	0.0	-1.8	0.0
					147	0.1	0.1	2.7	0.4	0.5	0.0
118	1	1	SX (RS)		146	0.1	0.8	2.0	0.5	0.2	0.0
					147	0.1	0.5	0.7	0.6	0.3	0.0
					150	0.0	0.6	0.7	0.6	0.3	0.0
					149	0.2	0.7	2.2	0.4	0.2	0.0
			SY (RS)		146	0.0	0.4	0.3	0.4	0.0	0.0
					147	0.1	0.3	0.8	0.3	0.1	0.0
					150	0.1	0.4	0.9	0.2	0.0	0.0
					149	0.1	0.4	0.2	0.2	0.1	0.0
			RC ENV~1	Max	146	0.0	0.4	3.3	0.2	0.1	0.0
					147	0.0	0.3	2.4	0.1	-0.2	0.0
					150	0.1	1.0	-0.1	1.1	-0.1	0.0
					149	0.4	0.9	4.5	1.1	0.4	0.0
				Min	146	-0.1	-1.2	-0.6	-0.9	-0.3	0.0
					147	-0.3	-0.8	0.1	-1.0	-1.2	0.0
					150	-0.1	-0.3	-3.2	-0.0	-0.7	0.0
					149	-0.1	-0.4	-0.3	0.2	-0.1	0.0
			RC ENV~2	Max	146	0.0	0.1	1.4	-0.1	-0.1	0.0

					147	0.0	-0.0	1.7	-0.3	-0.5	0.0
					150	0.0	0.7	-0.9	0.5	-0.3	0.0
					149	0.3	0.6	3.2	0.8	0.3	0.0
				Min	146	-0.1	-0.8	0.4	-0.4	-0.2	0.0
					147	-0.2	-0.5	0.9	-0.6	-0.9	0.0
					150	-0.0	0.0	-2.3	0.3	-0.5	0.0
					149	-0.0	-0.0	1.8	0.5	0.1	0.0
119	1	1	SX (RS)		147	0.1	0.4	1.1	0.5	0.3	0.0
					148	0.2	0.4	1.1	0.4	0.7	0.0
					151	0.1	0.4	1.4	0.4	0.4	0.0
					150	0.2	0.4	1.4	0.5	0.4	0.0
			SY (RS)		147	0.2	0.4	0.5	0.5	0.0	0.0
					148	0.0	0.4	0.9	0.4	0.1	0.0
					151	0.2	0.4	0.9	0.2	0.1	0.0
					150	0.1	0.4	0.4	0.2	0.2	0.0
			RC ENV~1	Max	147	0.1	0.1	4.0	0.3	0.8	0.0
					148	0.1	0.3	2.0	-0.0	-1.0	0.0
					151	0.3	0.9	-0.8	1.1	-1.1	0.0
					150	0.6	0.6	3.8	1.6	1.5	0.0
				Min	147	-0.2	-1.0	1.9	-0.8	0.1	0.0
					148	-0.6	-0.6	-1.1	-0.9	-3.0	0.0
					151	-0.2	-0.0	-5.2	0.2	-2.2	0.0
					150	-0.1	-0.3	1.0	0.3	0.3	0.0
			RC ENV~2	Max	147	0.0	-0.1	2.9	0.2	0.5	0.0
					148	0.0	-0.2	1.3	-0.3	-1.5	0.0
					151	0.1	0.7	-2.0	0.6	-1.4	0.0
					150	0.4	0.2	2.9	1.1	1.1	0.0
				Min	147	-0.1	-0.7	2.6	-0.3	0.3	0.0
					148	-0.4	-0.2	-0.1	-0.5	-2.2	0.0
					151	-0.0	0.1	-3.7	0.4	-1.7	0.0
					150	-0.0	0.1	2.3	0.7	0.6	0.0
120	1	1	SX (RS)		149	0.3	0.7	2.3	0.4	0.2	0.0
					150	0.4	0.5	1.2	0.5	0.1	0.0
					153	0.4	0.7	1.4	0.7	0.4	0.0
					152	0.3	0.6	1.9	0.4	0.1	0.0
			SY (RS)		149	0.1	0.4	0.2	0.2	0.1	0.0
					150	0.2	0.4	0.5	0.3	0.2	0.0
					153	0.2	0.4	1.2	0.4	0.2	0.0
					152	0.1	0.6	0.6	0.4	0.1	0.0
			RC ENV~1	Max	149	0.2	0.4	3.6	-0.2	0.1	0.0
					150	0.2	0.4	2.9	-0.3	-0.5	0.0
					153	0.7	1.2	0.1	1.6	0.1	0.0
					152	0.5	0.6	4.7	1.8	0.4	0.0
				Min	149	-0.5	-0.9	-1.0	-1.1	-0.4	0.0
					150	-0.7	-0.6	-0.1	-1.6	-1.3	0.0
					153	-0.2	-0.4	-3.5	0.1	-0.7	0.0
					152	-0.1	-0.6	0.1	0.7	-0.0	0.0
			RC ENV~2	Max	149	0.1	0.0	1.5	-0.5	-0.1	0.0
					150	0.1	-0.0	2.1	-0.7	-0.6	0.0
					153	0.5	0.8	-1.2	0.9	-0.1	0.0
					152	0.4	0.1	3.4	1.3	0.2	0.0
				Min	149	-0.3	-0.6	0.1	-0.8	-0.3	0.0
					150	-0.5	-0.1	1.1	-1.2	-1.0	0.0
					153	-0.1	-0.0	-2.4	0.7	-0.4	0.0
					152	-0.1	-0.2	1.9	1.1	0.1	0.0
121	1	1	SX (RS)		150	0.1	0.6	0.8	0.5	0.4	0.0

					151	0.6	0.4	1.7	0.5	1.1	0.0
					154	0.2	0.5	4.2	0.4	1.7	0.0
					153	0.8	0.4	5.6	0.1	0.1	0.0
				SY (RS)	150	0.2	0.7	1.1	0.2	0.1	0.0
					151	0.2	0.8	1.2	0.2	0.4	0.0
					154	0.3	0.8	2.7	0.6	0.6	0.0
					153	0.3	0.6	1.1	0.6	0.2	0.0
			RC ENV~1	Max	150	0.2	0.3	5.7	-0.0	0.8	0.0
					151	0.3	0.6	2.1	-0.3	-1.1	0.0
					154	0.2	1.2	-0.5	1.8	-0.8	0.0
					153	1.6	0.7	9.7	2.6	1.5	0.0
				Min	150	-0.2	-1.3	2.7	-1.0	-0.0	0.0
					151	-1.2	-0.9	-1.7	-1.4	-4.4	0.0
					154	-0.4	-0.4	-12.5	0.6	-5.1	0.0
					153	-0.4	-0.5	-1.6	0.7	0.6	0.0
			RC ENV~2	Max	150	0.0	-0.0	4.3	-0.2	0.4	0.0
					151	0.1	-0.0	1.3	-0.6	-1.8	0.0
					154	0.0	0.8	-3.1	1.3	-1.7	0.0
					153	1.1	0.1	7.0	1.9	1.1	0.0
				Min	150	-0.0	-0.9	3.4	-0.5	0.2	0.0
					151	-0.8	-0.2	-0.1	-1.0	-3.2	0.0
					154	-0.3	0.1	-8.9	1.1	-3.7	0.0
					153	-0.1	0.1	2.0	1.3	0.8	0.0
122	1	1	SX (RS)		152	0.3	0.6	2.0	0.4	0.1	0.0
					153	0.0	0.7	1.2	0.2	0.5	0.0
					155	0.4	0.5	2.8	1.1	0.6	0.0
					18	0.1	0.8	0.9	0.9	0.1	0.0
			SY (RS)		152	0.1	0.6	0.6	0.4	0.1	0.0
					153	0.1	0.6	2.9	0.5	0.3	0.0
					155	0.1	0.6	2.8	1.3	0.1	0.0
					18	0.1	0.6	1.1	0.7	0.1	0.0
			RC ENV~1	Max	152	0.2	0.6	3.2	-0.7	0.0	0.0
					153	0.1	0.8	3.1	-1.0	-0.0	0.0
					155	0.7	0.6	2.8	2.5	0.3	0.0
					18	0.1	0.6	4.0	2.2	0.2	0.0
				Min	152	-0.6	-0.6	-0.8	-1.8	-0.4	0.0
					153	-0.1	-0.6	-2.7	-2.8	-1.1	0.0
					155	-0.2	-0.5	-2.9	-0.0	-0.8	0.0
					18	-0.1	-1.0	0.7	0.3	-0.1	0.0
			RC ENV~2	Max	152	0.1	0.2	1.3	-1.1	-0.1	0.0
					153	-0.0	0.5	0.9	-1.4	-0.5	0.0
					155	0.5	0.1	0.6	1.5	0.1	0.0
					18	0.0	0.2	2.8	1.6	0.1	0.0
				Min	152	-0.4	-0.1	-0.0	-1.3	-0.2	0.0
					153	-0.1	-0.2	0.0	-2.1	-0.8	0.0
					155	-0.1	-0.1	-1.4	1.1	-0.4	0.0
					18	-0.0	-0.6	1.7	1.2	0.0	0.0
123	1	1	SX (RS)		153	1.3	1.0	6.2	0.7	0.7	0.0
					154	0.5	0.7	2.0	0.5	0.3	0.0
					8	2.3	1.1	7.2	1.7	6.2	0.0
					155	0.5	0.9	3.0	0.6	0.5	0.0
			SY (RS)		153	0.7	1.4	3.7	0.6	0.3	0.0
					154	0.7	1.4	2.7	0.6	0.5	0.0
					8	0.9	2.6	5.5	4.2	1.8	0.0
					155	0.6	0.4	1.6	0.6	0.4	0.0

			RC ENV~1	Max	153	0.8	0.8	9.6	-0.1	0.8	0.0
					154	0.4	1.5	9.3	-0.8	-2.2	0.0
					8	4.2	3.3	0.8	6.5	5.6	0.0
					155	0.5	0.7	6.5	4.7	0.8	0.0
				Min	153	-2.3	-2.1	-2.7	-1.5	-0.7	0.0
					154	-1.2	-1.3	0.2	-2.8	-4.8	0.0
					8	-1.4	-1.9	-14.2	-1.9	-6.7	-0.0
					155	-0.7	-1.2	0.2	1.8	-0.2	0.0
			RC ENV~2	Max	153	0.3	0.1	5.4	-0.5	0.3	0.0
					154	0.1	0.6	6.5	-1.2	-2.7	0.0
					8	2.9	1.7	-6.0	3.0	2.3	-0.0
					155	0.2	0.3	4.7	3.5	0.6	0.0
				Min	153	-1.6	-1.4	1.3	-0.9	-0.5	0.0
					154	-0.8	-0.3	2.2	-2.0	-3.5	0.0
					8	-0.6	-0.1	-10.2	2.2	-3.0	-0.0
					155	-0.5	-0.9	2.7	2.4	0.1	0.0
124	1	1	SX (RS)		155	0.5	0.9	3.1	0.8	0.6	0.0
					8	2.3	1.2	7.5	1.7	6.1	0.0
					158	0.6	0.8	1.7	0.6	0.4	0.0
					157	1.3	1.1	6.0	0.5	0.7	0.0
			SY (RS)		155	0.6	0.6	1.1	1.3	0.2	0.0
					8	1.1	2.7	6.0	5.2	2.1	0.0
					158	0.8	1.5	3.0	1.3	0.6	0.0
					157	0.8	1.5	4.4	1.4	0.5	0.0
			RC ENV~1	Max	155	0.4	1.3	6.2	-1.1	0.8	0.0
					8	4.0	2.2	0.9	2.6	5.5	0.0
					158	0.5	1.3	7.7	2.7	-2.1	0.0
					157	0.9	1.9	9.8	2.2	0.7	0.0
				Min	155	-0.9	-0.7	-0.1	-4.4	-0.3	0.0
					8	-1.5	-3.2	-14.1	-7.7	-6.8	-0.0
					158	-1.0	-1.7	-0.0	0.1	-4.5	0.0
					157	-2.2	-1.0	-2.2	-0.6	-0.6	0.0
			RC ENV~2	Max	155	0.1	0.9	3.8	-2.4	0.4	0.0
					8	2.8	0.3	-5.6	-2.5	2.0	-0.0
					158	0.2	0.2	5.5	1.9	-2.6	0.0
					157	0.4	1.2	6.4	1.2	0.5	0.0
				Min	155	-0.6	-0.3	1.8	-3.2	-0.1	0.0
					8	-0.7	-1.4	-9.3	-3.7	-3.2	-0.0
					158	-0.7	-0.7	1.6	1.0	-3.3	0.0
					157	-1.5	-0.2	2.3	0.8	-0.2	0.0
125	1	1	SX (RS)		156	0.3	0.6	1.3	0.4	0.1	0.0
					157	0.4	0.8	1.6	0.5	0.3	0.0
					160	0.4	0.5	1.3	0.6	0.1	0.0
					159	0.3	0.7	1.5	0.4	0.1	0.0
			SY (RS)		156	0.1	0.4	1.2	1.0	0.1	0.0
					157	0.3	0.4	1.2	1.1	0.3	0.0
					160	0.2	0.4	0.4	0.7	0.2	0.0
					159	0.2	0.2	1.5	0.7	0.1	0.0
			RC ENV~1	Max	156	0.5	0.6	2.9	-0.1	0.2	0.0
					157	0.6	0.5	0.3	0.2	-0.0	0.0
					160	0.2	0.6	2.3	1.5	-0.4	0.0
					159	0.2	0.9	4.7	1.3	0.1	0.0
				Min	156	-0.1	-0.6	-0.1	-2.0	-0.1	0.0
					157	-0.3	-1.0	-2.9	-2.0	-0.8	0.0
					160	-0.7	-0.5	-0.2	-0.0	-1.0	0.0
					159	-0.4	-0.5	0.2	-0.1	-0.2	0.0

			RC ENV~2	Max	156	0.3	0.2	1.8	-1.1	0.1	0.0
					157	0.4	0.1	-1.0	-0.9	-0.3	0.0
					160	0.1	0.1	1.3	1.0	-0.5	0.0
					159	0.1	0.5	3.3	0.8	0.1	0.0
				Min	156	-0.1	-0.1	0.2	-1.4	-0.0	0.0
					157	-0.1	-0.7	-1.7	-1.3	-0.6	0.0
					160	-0.5	-0.0	0.7	0.4	-0.8	0.0
					159	-0.3	-0.1	1.6	0.4	-0.1	0.0
126	1	1	SX (RS)		157	0.8	0.5	5.4	0.3	0.2	0.0
					158	0.2	0.6	3.9	0.2	1.8	0.0
					161	0.6	0.4	1.8	0.6	1.2	0.0
					160	0.1	0.7	0.3	0.3	0.2	0.0
			SY (RS)		157	0.5	0.7	1.7	1.3	0.1	0.0
					158	0.2	0.9	3.0	1.3	0.6	0.0
					161	0.4	0.9	1.1	0.6	0.6	0.0
					160	0.2	0.7	1.5	0.6	0.3	0.0
			RC ENV~1	Max	157	1.5	0.7	9.3	-0.0	1.1	0.0
					158	0.1	0.6	-0.9	0.1	-0.8	0.0
					161	0.3	0.9	1.8	1.3	-1.1	0.0
					160	0.2	1.0	7.4	1.1	1.0	0.0
				Min	157	-0.4	-0.8	-1.6	-2.6	0.5	0.0
					158	-0.4	-1.1	-10.9	-2.5	-5.6	0.0
					161	-1.1	-0.8	-1.8	0.1	-4.1	0.0
					160	-0.2	-0.4	2.5	-0.1	0.2	0.0
			RC ENV~2	Max	157	1.0	0.0	6.2	-1.2	0.9	0.0
					158	0.0	0.1	-2.5	-1.2	-1.9	0.0
					161	0.1	0.1	0.3	0.8	-1.6	0.0
					160	0.1	0.7	5.4	0.7	0.7	0.0
				Min	157	-0.2	-0.1	1.2	-1.7	0.7	0.0
					158	-0.3	-0.6	-7.9	-1.7	-4.0	0.0
					161	-0.8	-0.1	-0.6	0.4	-3.0	0.0
					160	0.0	-0.1	4.0	0.5	0.4	0.0
127	1	1	SX (RS)		159	0.2	0.7	1.3	0.4	0.1	0.0
					160	0.0	0.7	0.3	0.4	0.1	0.0
					163	0.1	0.6	0.4	0.7	0.3	0.0
					162	0.1	0.8	0.6	0.6	0.0	0.0
			SY (RS)		159	0.2	0.2	1.5	0.7	0.1	0.0
					160	0.1	0.2	1.1	0.7	0.2	0.0
					163	0.1	0.2	0.9	0.3	0.2	0.0
					162	0.1	0.1	1.6	0.2	0.1	0.0
			RC ENV~1	Max	159	0.4	0.5	2.9	0.1	0.2	0.0
					160	0.1	0.5	0.1	0.2	-0.3	0.0
					163	0.1	0.8	1.7	0.9	-0.3	0.0
					162	0.1	1.1	4.6	0.8	0.2	0.0
				Min	159	-0.1	-0.9	-0.6	-1.3	-0.1	0.0
					160	-0.1	-0.9	-2.1	-1.2	-1.0	0.0
					163	-0.3	-0.4	-0.0	-0.4	-1.0	0.0
					162	-0.1	-0.5	0.3	-0.4	-0.2	0.0
			RC ENV~2	Max	159	0.2	0.1	1.6	-0.4	0.1	0.0
					160	-0.0	0.1	-0.6	-0.5	-0.5	0.0
					163	0.0	0.4	0.9	0.4	-0.3	0.0
					162	0.0	0.8	3.3	0.4	0.1	0.0
				Min	159	-0.0	-0.5	-0.1	-0.8	-0.1	0.0
					160	-0.0	-0.6	-1.5	-0.8	-0.7	0.0
					163	-0.2	-0.0	0.5	-0.1	-0.7	0.0
					162	-0.0	-0.1	1.8	-0.0	-0.0	0.0

128	1	1	SX (RS)	160	0.3	0.5	1.0	0.6	0.4	0.0
				161	0.1	0.5	0.8	0.2	0.3	0.0
				164	0.3	0.4	0.1	0.5	0.7	0.0
				163	0.1	0.6	0.3	0.4	0.2	0.0
			SY (RS)	160	0.3	0.5	1.1	0.7	0.2	0.0
				161	0.3	0.3	1.2	0.7	0.3	0.0
				164	0.2	0.5	1.1	0.2	0.2	0.0
				163	0.2	0.2	1.2	0.3	0.2	0.0
			RC ENV~1 Max	160	0.5	0.4	3.2	-0.0	1.2	0.0
				161	0.3	0.3	-0.9	0.1	-1.3	0.0
				164	0.1	0.6	1.0	0.8	-1.0	0.0
				163	0.2	0.8	5.5	0.5	1.1	0.0
			Min	160	-0.1	-0.5	1.1	-1.4	0.3	0.0
				161	-0.3	-0.7	-3.3	-1.3	-2.6	0.0
				164	-0.5	-0.4	-1.1	-0.2	-2.8	0.0
				163	-0.2	-0.4	2.0	-0.2	0.3	0.0
			RC ENV~2 Max	160	0.4	-0.1	2.2	-0.4	0.9	0.0
				161	0.1	0.0	-1.2	-0.6	-1.5	0.0
				164	0.0	0.1	0.0	0.3	-1.3	0.0
				163	0.1	0.5	4.0	0.3	0.8	0.0
			Min	160	-0.0	-0.1	1.1	-0.9	0.4	0.0
				161	-0.1	-0.4	-2.5	-0.8	-2.0	0.0
				164	-0.4	0.0	-0.7	-0.1	-2.1	0.0
				163	-0.1	-0.0	3.1	0.1	0.5	0.0
129	1	1	SX (RS)	162	0.0	0.8	0.4	0.6	0.0	0.0
				163	0.0	0.7	0.4	0.5	0.2	0.0
				166	0.0	0.7	0.3	0.5	0.2	0.0
				165	0.0	0.8	0.3	0.6	0.0	0.0
			SY (RS)	162	0.1	0.1	1.6	0.2	0.1	0.0
				163	0.1	0.1	0.9	0.3	0.1	0.0
				166	0.1	0.1	0.9	0.3	0.1	0.0
				165	0.1	0.1	1.6	0.2	0.1	0.0
			RC ENV~1 Max	162	0.1	0.5	2.9	0.4	0.2	0.0
				163	0.1	0.5	0.7	0.3	-0.2	0.0
				166	0.1	0.9	1.2	0.6	-0.2	0.0
				165	0.1	1.1	4.7	0.6	0.3	0.0
			Min	162	-0.1	-1.1	-0.6	-0.8	-0.2	0.0
				163	-0.1	-0.9	-1.2	-0.7	-1.0	0.0
				166	-0.1	-0.5	-0.7	-0.6	-0.7	0.0
				165	-0.1	-0.5	0.3	-0.5	-0.1	0.0
			RC ENV~2 Max	162	0.0	0.1	1.3	0.0	0.0	0.0
				163	0.0	0.1	0.2	-0.1	-0.4	0.0
				166	0.0	0.6	0.3	0.1	-0.3	0.0
				165	0.0	0.8	3.3	0.2	0.2	0.0
			Min	162	-0.0	-0.8	-0.1	-0.4	-0.1	0.0
				163	-0.0	-0.6	-0.3	-0.4	-0.7	0.0
				166	-0.0	-0.1	-0.3	-0.4	-0.5	0.0
				165	-0.0	-0.1	1.8	-0.2	0.0	0.0
130	1	1	SX (RS)	163	0.1	0.5	0.6	0.5	0.3	0.0
				164	0.1	0.4	0.6	0.4	0.7	0.0
				167	0.1	0.4	0.6	0.4	0.7	0.0
				166	0.1	0.5	0.6	0.5	0.3	0.0
			SY (RS)	163	0.2	0.2	1.1	0.3	0.2	0.0
				164	0.2	0.2	1.0	0.3	0.2	0.0
				167	0.2	0.2	1.0	0.3	0.2	0.0
				166	0.2	0.2	1.1	0.3	0.2	0.0

			RC ENV~1	Max	163	0.3	0.3	3.6	0.3	0.9	0.0
					164	0.2	0.3	-0.4	0.1	-0.9	0.0
					167	0.2	0.6	0.2	0.6	-0.9	0.0
					166	0.3	0.6	5.3	0.6	1.2	0.0
				Min	163	-0.1	-0.6	1.3	-0.7	0.2	0.0
					164	-0.3	-0.6	-2.4	-0.7	-2.9	0.0
					167	-0.3	-0.3	-2.5	-0.4	-2.5	0.0
					166	-0.1	-0.3	1.8	-0.4	0.2	0.0
			RC ENV~2	Max	163	0.2	-0.0	2.5	0.1	0.7	0.0
					164	-0.0	-0.0	-0.5	-0.2	-1.4	0.0
					167	-0.0	0.2	-0.8	0.2	-1.2	0.0
					166	0.2	0.3	3.9	0.3	0.9	0.0
				Min	163	0.0	-0.3	1.4	-0.3	0.3	0.0
					164	-0.2	-0.2	-1.5	-0.4	-2.1	0.0
					167	-0.2	0.0	-1.7	-0.3	-1.9	0.0
					166	0.0	0.0	2.9	-0.0	0.5	0.0
131	1	1	SX (RS)		165	0.1	0.8	0.6	0.6	0.0	0.0
					166	0.1	0.6	0.4	0.7	0.3	0.0
					169	0.0	0.7	0.3	0.4	0.1	0.0
					168	0.2	0.7	1.3	0.4	0.1	0.0
			SY (RS)		165	0.1	0.1	1.6	0.2	0.1	0.0
					166	0.1	0.2	0.9	0.3	0.2	0.0
					169	0.1	0.2	1.1	0.7	0.2	0.0
					168	0.2	0.2	1.5	0.7	0.1	0.0
			RC ENV~1	Max	165	0.1	0.5	2.8	0.5	0.1	0.0
					166	0.1	0.4	1.4	0.5	-0.2	0.0
					169	0.1	0.9	0.7	0.8	-0.2	0.0
					168	0.4	0.9	5.2	0.8	0.4	0.0
				Min	165	-0.1	-1.1	-0.6	-0.6	-0.3	0.0
					166	-0.3	-0.7	-0.5	-0.8	-1.2	0.0
					169	-0.1	-0.5	-1.9	-0.6	-0.6	0.0
					168	-0.1	-0.5	0.5	-0.6	-0.0	0.0
			RC ENV~2	Max	165	0.0	0.1	1.3	0.2	-0.0	0.0
					166	0.0	0.0	0.9	0.1	-0.5	0.0
					169	-0.0	0.6	-0.4	0.1	-0.2	0.0
					168	0.3	0.5	3.6	0.3	0.3	0.0
				Min	165	-0.0	-0.8	-0.2	-0.2	-0.2	0.0
					166	-0.2	-0.4	0.4	-0.4	-0.8	0.0
					169	-0.0	-0.1	-1.3	-0.4	-0.5	0.0
					168	-0.0	-0.1	1.8	-0.1	0.1	0.0
132	1	1	SX (RS)		166	0.1	0.6	0.3	0.4	0.2	0.0
					167	0.3	0.4	0.1	0.5	0.7	0.0
					170	0.1	0.5	0.8	0.2	0.3	0.0
					169	0.3	0.5	1.0	0.6	0.4	0.0
			SY (RS)		166	0.2	0.2	1.2	0.3	0.2	0.0
					167	0.2	0.5	1.1	0.2	0.2	0.0
					170	0.3	0.3	1.2	0.7	0.3	0.0
					169	0.3	0.5	1.1	0.7	0.2	0.0
			RC ENV~1	Max	166	0.3	0.4	3.8	0.6	0.7	0.0
					167	0.1	0.4	1.0	0.3	-0.9	0.0
					170	0.3	0.7	-0.3	0.8	-1.2	0.0
					169	0.6	0.5	4.7	1.0	1.4	0.0
				Min	166	-0.2	-0.8	1.5	-0.4	0.2	0.0
					167	-0.5	-0.5	-1.6	-0.7	-2.9	0.0
					170	-0.3	-0.3	-3.7	-0.5	-2.1	0.0
					169	-0.1	-0.4	1.5	-0.4	0.2	0.0

			RC ENV~2	Max	166	0.1	0.0	2.7	0.4	0.5	0.0
					167	0.0	-0.0	0.5	-0.0	-1.4	0.0
					170	0.1	0.5	-1.4	0.2	-1.2	0.0
					169	0.4	0.1	3.4	0.6	1.0	0.0
				Min	166	-0.1	-0.5	1.8	-0.1	0.2	0.0
					167	-0.4	-0.1	-0.6	-0.3	-2.2	0.0
					170	-0.1	-0.0	-2.6	-0.2	-1.6	0.0
					169	-0.0	0.1	2.5	0.1	0.5	0.0
133	1	1	SX (RS)		168	0.3	0.7	1.5	0.4	0.1	0.0
					169	0.4	0.5	1.3	0.6	0.1	0.0
					172	0.4	0.8	1.6	0.5	0.3	0.0
					171	0.3	0.6	1.3	0.4	0.1	0.0
			SY (RS)		168	0.2	0.2	1.5	0.7	0.1	0.0
					169	0.2	0.4	0.4	0.7	0.2	0.0
					172	0.3	0.4	1.2	1.1	0.3	0.0
					171	0.1	0.4	1.2	1.0	0.1	0.0
			RC ENV~1	Max	168	0.2	0.5	2.6	0.6	0.0	0.0
					169	0.2	0.5	1.9	0.5	-0.4	0.0
					172	0.7	1.0	0.9	1.3	0.0	0.0
					171	0.5	0.5	5.3	1.3	0.3	0.0
				Min	168	-0.4	-0.9	-1.2	-0.8	-0.4	0.0
					169	-0.7	-0.5	-0.7	-1.0	-1.1	0.0
					172	-0.2	-0.5	-2.2	-1.0	-0.7	0.0
					171	-0.1	-0.7	0.8	-0.6	-0.0	0.0
			RC ENV~2	Max	168	0.1	0.1	1.2	0.1	-0.1	0.0
					169	0.1	0.1	1.3	-0.0	-0.6	0.0
					172	0.5	0.7	-0.6	0.2	-0.1	0.0
					171	0.4	0.1	3.7	0.5	0.2	0.0
				Min	168	-0.3	-0.5	-0.5	-0.3	-0.3	0.0
					169	-0.5	-0.0	0.5	-0.6	-0.8	0.0
					172	-0.1	-0.1	-1.3	-0.3	-0.3	0.0
					171	-0.1	-0.3	1.9	0.1	0.1	0.0
134	1	1	SX (RS)		169	0.1	0.7	0.3	0.3	0.2	0.0
					170	0.6	0.4	1.8	0.6	1.2	0.0
					173	0.2	0.6	3.9	0.2	1.8	0.0
					172	0.8	0.4	5.4	0.3	0.2	0.0
			SY (RS)		169	0.2	0.7	1.5	0.6	0.3	0.0
					170	0.4	0.8	1.1	0.6	0.6	0.0
					173	0.2	0.8	3.0	1.3	0.6	0.0
					172	0.5	0.7	1.7	1.3	0.1	0.0
			RC ENV~1	Max	169	0.2	0.4	5.0	0.6	0.7	0.0
					170	0.3	0.8	1.2	0.3	-0.9	0.0
					173	0.1	1.1	0.1	1.8	-0.7	0.0
					172	1.5	0.8	10.3	1.8	1.2	0.0
				Min	169	-0.2	-1.0	1.9	-0.7	0.2	0.0
					170	-1.2	-0.9	-2.4	-0.8	-4.0	0.0
					173	-0.4	-0.6	-10.5	-0.8	-4.9	0.0
					172	-0.4	-0.7	-1.3	-0.7	0.5	0.0
			RC ENV~2	Max	169	0.1	0.1	3.8	0.4	0.4	0.0
					170	0.1	0.1	0.6	-0.0	-1.5	0.0
					173	0.0	0.7	-2.1	0.6	-1.4	0.0
					172	1.1	0.1	7.4	0.9	0.9	0.0
				Min	169	0.0	-0.7	2.4	-0.1	0.2	0.0
					170	-0.8	-0.1	-0.7	-0.5	-3.0	0.0
					173	-0.3	-0.0	-7.5	0.0	-3.6	0.0
					172	-0.2	-0.0	2.3	0.4	0.7	0.0

135	1	1	SX (RS)	171	0.3	0.6	1.5	0.4	0.1	0.0
				172	0.0	0.7	1.3	0.4	0.5	0.0
				174	0.4	0.5	3.0	0.9	0.5	0.0
				19	0.1	0.8	0.8	0.9	0.1	0.0
			SY (RS)	171	0.1	0.4	1.2	1.0	0.1	0.0
				172	0.1	0.5	2.9	1.0	0.2	0.0
				174	0.2	0.4	2.5	0.7	0.3	0.0
				19	0.1	0.6	1.0	0.7	0.1	0.0
		RC ENV~1	Max	171	0.2	0.7	2.5	0.6	0.0	0.0
				172	0.1	0.9	2.7	0.4	0.1	0.0
				174	0.7	0.5	3.5	1.2	0.3	0.0
				19	0.1	0.6	4.2	1.1	0.2	0.0
			Min	171	-0.6	-0.5	-1.3	-1.3	-0.3	0.0
				172	-0.2	-0.5	-3.1	-1.6	-0.9	0.0
				174	-0.3	-0.5	-2.4	-0.6	-0.7	0.0
				19	-0.1	-1.0	0.8	-0.6	-0.1	0.0
		RC ENV~2	Max	171	0.1	0.3	1.1	-0.1	-0.1	0.0
				172	-0.0	0.6	0.6	-0.4	-0.3	0.0
				174	0.5	0.0	1.6	0.4	0.1	0.0
				19	0.0	0.1	3.0	0.4	0.1	0.0
			Min	171	-0.4	-0.1	-0.7	-0.5	-0.2	0.0
				172	-0.1	-0.1	-0.5	-1.1	-0.6	0.0
				174	-0.1	-0.1	-0.7	-0.2	-0.3	0.0
				19	-0.0	-0.7	1.8	-0.0	-0.0	0.0
136	1	1	SX (RS)	172	1.3	1.1	6.0	0.5	0.6	0.0
				173	0.6	0.7	1.7	0.6	0.4	0.0
				11	2.3	1.2	7.5	1.7	6.1	0.0
				174	0.5	0.9	3.1	0.8	0.6	0.0
			SY (RS)	172	0.8	1.5	4.4	1.4	0.5	0.0
				173	0.8	1.5	3.0	1.3	0.6	0.0
				11	1.1	2.7	6.0	5.2	2.1	0.0
				174	0.6	0.6	1.1	1.3	0.2	0.0
		RC ENV~1	Max	172	0.8	1.0	8.7	1.3	0.7	0.0
				173	0.5	1.6	7.6	0.7	-1.8	0.0
				11	4.1	3.3	2.6	6.4	5.8	0.0
				174	0.4	0.7	6.2	2.7	0.8	0.0
			Min	172	-2.2	-1.9	-3.3	-1.5	-0.7	0.0
				173	-1.1	-1.3	-0.8	-1.9	-4.0	0.0
				11	-1.4	-2.1	-12.4	-4.0	-6.4	-0.0
				174	-0.8	-1.3	-0.0	0.0	-0.4	0.0
		RC ENV~2	Max	172	0.4	0.2	4.2	0.4	0.2	0.0
				173	0.1	0.7	5.3	-0.2	-2.3	0.0
				11	2.9	1.5	-3.7	1.7	2.8	0.0
				174	0.2	0.3	4.3	1.9	0.4	0.0
			Min	172	-1.6	-1.3	0.1	-0.1	-0.5	0.0
				173	-0.8	-0.3	1.4	-1.1	-3.0	0.0
				11	-0.6	-0.2	-7.4	0.7	-2.4	0.0
				174	-0.5	-0.9	2.3	1.2	-0.0	0.0
137	1	1	SX (RS)	174	0.5	0.9	3.0	0.6	0.5	0.0
				11	2.3	1.1	7.2	1.7	6.2	0.0
				177	0.5	0.7	2.1	0.5	0.3	0.0
				176	1.3	1.0	6.1	0.7	0.7	0.0
			SY (RS)	174	0.6	0.4	1.6	0.6	0.4	0.0
				11	0.9	2.6	5.5	4.2	1.8	0.0
				177	0.7	1.4	2.7	0.6	0.5	0.0
				176	0.7	1.4	3.7	0.6	0.3	0.0

			RC ENV~1	Max	174	0.4	1.3	5.4	-0.7	0.7	0.0
					11	4.1	2.1	0.9	2.8	5.9	0.0
					177	0.4	1.2	8.8	0.8	-1.9	0.0
					176	0.8	1.9	9.5	0.3	0.8	0.0
				Min	174	-0.8	-0.6	-0.7	-2.5	-0.3	0.0
					11	-1.4	-3.2	-13.5	-5.7	-6.4	-0.0
					177	-1.1	-1.6	1.0	-0.6	-3.7	0.0
					176	-2.3	-0.9	-2.8	-1.1	-0.7	0.0
			RC ENV~2	Max	174	0.2	0.9	2.9	-0.9	0.3	0.0
					11	2.9	0.3	-4.2	-1.2	2.7	0.0
					177	0.1	0.2	6.4	0.5	-2.0	0.0
					176	0.4	1.3	5.6	-0.2	0.4	0.0
				Min	174	-0.5	-0.3	0.8	-1.9	-0.2	0.0
					11	-0.7	-1.5	-8.2	-2.0	-2.6	0.0
					177	-0.8	-0.7	2.1	-0.3	-2.8	0.0
					176	-1.6	-0.2	1.5	-0.6	-0.4	0.0
138	1	1	SX (RS)		175	0.3	0.6	1.9	0.4	0.1	0.0
					176	0.4	0.7	1.4	0.7	0.4	0.0
					179	0.4	0.5	1.2	0.5	0.1	0.0
					178	0.3	0.7	2.3	0.4	0.2	0.0
			SY (RS)		175	0.1	0.6	0.6	0.4	0.1	0.0
					176	0.2	0.4	1.2	0.4	0.2	0.0
					179	0.2	0.4	0.5	0.3	0.2	0.0
					178	0.1	0.4	0.2	0.2	0.1	0.0
			RC ENV~1	Max	175	0.5	0.7	3.3	0.4	0.2	0.0
					176	0.7	0.4	0.2	1.0	0.1	0.0
					179	0.2	0.5	2.4	0.1	-0.4	0.0
					178	0.2	0.9	4.1	-0.1	0.1	0.0
				Min	175	-0.1	-0.5	-0.5	-0.4	-0.1	0.0
					176	-0.2	-1.0	-2.6	-0.5	-0.7	0.0
					179	-0.7	-0.5	-0.0	-1.3	-0.9	0.0
					178	-0.4	-0.5	-0.6	-1.1	-0.3	0.0
			RC ENV~2	Max	175	0.4	0.3	1.8	0.2	0.1	0.0
					176	0.5	0.1	-0.5	0.4	-0.2	0.0
					179	0.1	0.0	1.7	-0.4	-0.3	0.0
					178	0.1	0.5	2.9	-0.5	0.1	0.0
				Min	175	-0.1	-0.1	-0.0	-0.0	-0.1	0.0
					176	-0.1	-0.7	-1.6	0.2	-0.4	0.0
					179	-0.5	-0.0	0.7	-0.9	-0.7	0.0
					178	-0.3	-0.1	1.4	-0.8	-0.1	0.0
139	1	1	SX (RS)		176	0.8	0.4	5.6	0.1	0.1	0.0
					177	0.2	0.5	4.2	0.4	1.7	0.0
					180	0.6	0.4	1.7	0.5	1.1	0.0
					179	0.1	0.6	0.7	0.5	0.4	0.0
			SY (RS)		176	0.3	0.6	1.1	0.6	0.2	0.0
					177	0.3	0.8	2.7	0.6	0.6	0.0
					180	0.2	0.8	1.2	0.2	0.4	0.0
					179	0.2	0.7	1.1	0.2	0.1	0.0
			RC ENV~1	Max	176	1.5	0.6	8.9	0.5	1.0	0.0
					177	0.2	0.5	-0.1	0.6	-0.6	0.0
					180	0.3	0.8	2.2	-0.1	-0.8	0.0
					179	0.2	1.1	6.1	-0.2	0.8	0.0
				Min	176	-0.4	-0.6	-2.3	-0.8	0.5	0.0
					177	-0.4	-1.1	-10.4	-0.6	-4.8	0.0
					180	-1.2	-0.7	-1.2	-1.4	-3.5	0.0
					179	-0.2	-0.4	2.5	-1.2	0.0	0.0

			RC ENV~2	Max	176	1.1	-0.0	5.7	0.3	0.8	0.0
					177	0.0	0.0	-1.8	0.1	-1.5	0.0
					180	0.1	0.1	1.0	-0.5	-1.2	0.0
					179	0.0	0.8	4.6	-0.6	0.5	0.0
				Min	176	-0.2	-0.1	0.7	-0.3	0.5	0.0
					177	-0.2	-0.7	-7.6	-0.2	-3.5	0.0
					180	-0.8	-0.1	-0.3	-1.0	-2.6	0.0
					179	-0.0	-0.1	3.6	-0.9	0.3	0.0
140	1	1	SX (RS)		178	0.2	0.7	2.2	0.4	0.2	0.0
					179	0.0	0.6	0.7	0.6	0.3	0.0
					182	0.1	0.5	0.7	0.6	0.3	0.0
					181	0.1	0.8	2.0	0.5	0.2	0.0
			SY (RS)		178	0.1	0.4	0.2	0.2	0.1	0.0
					179	0.1	0.4	0.9	0.2	0.0	0.0
					182	0.1	0.3	0.8	0.3	0.1	0.0
					181	0.0	0.4	0.3	0.4	0.0	0.0
			RC ENV~1	Max	178	0.4	0.5	3.4	1.1	0.3	0.0
					179	0.1	0.4	0.3	1.2	-0.2	0.0
					182	0.1	0.7	1.6	-0.3	-0.1	0.0
					181	0.0	1.1	3.7	-0.3	0.2	0.0
				Min	178	-0.1	-0.9	-0.9	0.1	-0.1	0.0
					179	-0.1	-0.9	-1.8	0.0	-0.7	0.0
					182	-0.3	-0.4	0.0	-1.8	-0.8	0.0
					181	-0.1	-0.5	-0.2	-1.6	-0.2	0.0
			RC ENV~2	Max	178	0.3	0.1	1.7	0.8	0.1	0.0
					179	0.0	0.1	0.1	0.8	-0.4	0.0
					182	0.0	0.4	1.2	-0.8	-0.2	0.0
					181	0.0	0.7	2.7	-0.8	0.1	0.0
				Min	178	-0.0	-0.5	-0.1	0.5	-0.1	0.0
					179	-0.0	-0.6	-1.3	0.5	-0.5	0.0
					182	-0.2	-0.1	0.5	-1.3	-0.6	0.0
					181	-0.1	-0.2	1.6	-1.2	-0.0	0.0
141	1	1	SX (RS)		179	0.3	0.4	1.4	0.5	0.4	0.0
					180	0.1	0.4	1.4	0.4	0.4	0.0
					183	0.2	0.4	1.1	0.4	0.7	0.0
					182	0.1	0.4	1.1	0.5	0.3	0.0
			SY (RS)		179	0.1	0.4	0.4	0.2	0.2	0.0
					180	0.2	0.4	0.9	0.2	0.1	0.0
					183	0.0	0.4	0.9	0.4	0.1	0.0
					182	0.2	0.4	0.5	0.5	0.0	0.0
			RC ENV~1	Max	179	0.6	0.3	2.9	1.4	1.1	0.0
					180	0.3	0.1	0.1	1.1	-0.9	0.0
					183	0.1	0.5	1.2	-0.5	-0.6	0.0
					182	0.1	0.9	4.2	-0.4	0.8	0.0
				Min	179	-0.1	-0.5	0.2	0.0	0.2	0.0
					180	-0.2	-0.8	-2.8	0.2	-1.9	0.0
					183	-0.6	-0.3	-1.0	-1.8	-2.1	0.0
					182	-0.2	-0.2	1.7	-1.7	0.2	0.0
			RC ENV~2	Max	179	0.4	-0.0	1.7	1.0	0.8	0.0
					180	0.1	-0.0	-0.1	0.8	-1.1	0.0
					183	0.0	0.1	0.9	-0.9	-0.8	0.0
					182	0.0	0.6	3.1	-0.9	0.6	0.0
				Min	179	-0.0	-0.1	0.7	0.5	0.3	0.0
					180	-0.0	-0.6	-2.1	0.6	-1.5	0.0
					183	-0.4	0.1	-0.5	-1.3	-1.6	0.0
					182	-0.1	0.0	2.7	-1.3	0.4	0.0

142	1	1	SX (RS)	181	0.1	0.8	2.0	0.5	0.2	0.0
				182	0.0	0.6	0.7	0.6	0.3	0.0
				185	0.1	0.6	0.7	0.5	0.3	0.0
				184	0.0	0.7	2.0	0.5	0.2	0.0
			SY (RS)	181	0.0	0.4	0.3	0.4	0.0	0.0
				182	0.0	0.4	0.7	0.4	0.0	0.0
				185	0.0	0.3	0.7	0.6	0.0	0.0
				184	0.0	0.4	0.2	0.7	0.0	0.0
			RC ENV~1 Max	181	0.1	0.5	3.1	1.6	0.2	0.0
				182	0.0	0.3	1.5	1.6	-0.1	0.0
				185	0.0	0.9	0.7	-0.3	-0.0	0.0
				184	0.0	1.1	3.7	-0.1	0.3	0.0
			Min	181	-0.0	-1.1	-0.9	0.3	-0.2	0.0
				182	-0.0	-0.9	-0.4	0.2	-0.8	0.0
				185	-0.1	-0.4	-0.8	-1.8	-0.6	0.0
				184	-0.0	-0.4	-0.4	-1.6	-0.2	0.0
			RC ENV~2 Max	181	0.0	0.2	1.4	1.2	0.0	0.0
				182	0.0	0.1	1.0	1.2	-0.3	0.0
				185	-0.0	0.6	0.2	-0.9	-0.1	0.0
				184	0.0	0.8	2.5	-0.8	0.2	0.0
			Min	181	0.0	-0.7	0.1	0.8	-0.1	0.0
				182	-0.0	-0.6	-0.0	0.8	-0.5	0.0
				185	-0.0	-0.1	-0.3	-1.3	-0.4	0.0
				184	-0.0	-0.1	1.3	-1.2	0.0	0.0
143	1	1	SX (RS)	182	0.1	0.4	1.2	0.4	0.4	0.0
				183	0.1	0.2	1.3	0.5	0.7	0.0
				186	0.1	0.4	1.3	0.3	0.6	0.0
				185	0.1	0.3	1.3	0.5	0.4	0.0
			SY (RS)	182	0.1	0.3	0.4	0.4	0.1	0.0
				183	0.1	0.4	0.7	0.4	0.1	0.0
				186	0.1	0.2	0.8	0.6	0.0	0.0
				185	0.1	0.4	0.4	0.7	0.1	0.0
			RC ENV~1 Max	182	0.3	0.3	3.1	1.8	0.8	0.0
				183	0.1	0.1	1.3	1.5	-0.7	0.0
				186	0.0	0.5	0.3	-0.3	-0.5	0.0
				185	0.1	0.8	3.8	-0.0	0.9	0.0
			Min	182	-0.0	-0.6	0.7	0.5	0.0	0.0
				183	-0.1	-0.7	-1.5	0.3	-2.1	0.0
				186	-0.3	-0.2	-2.3	-1.7	-1.8	0.0
				185	-0.1	-0.1	1.1	-1.5	0.1	0.0
			RC ENV~2 Max	182	0.2	-0.0	2.0	1.3	0.5	0.0
				183	0.0	-0.1	0.8	1.1	-1.0	0.0
				186	-0.0	0.3	-0.6	-0.9	-0.7	0.0
				185	-0.0	0.5	2.9	-0.7	0.7	0.0
			Min	182	0.0	-0.4	1.1	0.9	0.1	0.0
				183	-0.0	-0.5	-0.6	0.8	-1.6	0.0
				186	-0.2	0.1	-1.5	-1.3	-1.3	0.0
				185	-0.1	0.1	2.1	-1.1	0.4	0.0
144	1	1	SX (RS)	184	0.1	0.7	2.2	0.5	0.2	0.0
				185	0.2	0.4	0.7	0.6	0.3	0.0
				188	0.0	0.6	0.6	0.4	0.3	0.0
				187	0.2	0.5	2.4	0.3	0.2	0.0
			SY (RS)	184	0.0	0.4	0.2	0.7	0.0	0.0
				185	0.1	0.4	0.6	0.7	0.1	0.0
				188	0.0	0.4	0.8	0.8	0.0	0.0

					187	0.1	0.4	0.2	0.9	0.1	0.0
			RC ENV~1	Max	184	0.1	0.4	3.4	1.6	0.2	0.0
					185	0.1	0.1	2.4	1.5	-0.1	0.0
					188	0.0	1.0	0.0	0.2	-0.0	0.0
					187	0.2	0.9	4.0	0.5	0.3	0.0
				Min	184	-0.1	-1.1	-1.0	0.1	-0.3	0.0
					185	-0.2	-0.8	0.5	-0.0	-0.8	0.0
					188	-0.0	-0.3	-1.6	-1.4	-0.5	0.0
					187	-0.2	-0.2	-0.9	-1.4	-0.1	0.0
			RC ENV~2	Max	184	0.0	0.1	1.6	1.2	-0.0	0.0
					185	0.1	-0.0	1.7	1.1	-0.4	0.0
					188	0.0	0.7	-0.7	-0.6	-0.1	0.0
					187	0.1	0.7	2.4	-0.4	0.2	0.0
				Min	184	-0.0	-0.8	0.3	0.8	-0.2	0.0
					185	-0.1	-0.6	1.1	0.6	-0.6	0.0
					188	-0.0	-0.1	-1.1	-0.9	-0.3	0.0
					187	-0.1	-0.0	1.0	-0.7	0.1	0.0
145	1	1	SX (RS)		185	0.2	0.5	1.3	0.3	0.3	0.0
					186	0.3	0.0	1.1	0.5	0.7	0.0
					189	0.2	0.5	1.2	0.3	0.4	0.0
					188	0.3	0.1	1.6	0.5	0.4	0.0
			SY (RS)		185	0.2	0.4	0.4	0.6	0.0	0.0
					186	0.0	0.5	0.7	0.7	0.2	0.0
					189	0.2	0.4	0.8	0.8	0.1	0.0
					188	0.1	0.5	0.2	1.0	0.2	0.0
			RC ENV~1	Max	185	0.3	0.3	3.4	1.8	0.6	0.0
					186	0.3	0.2	2.2	1.4	-0.7	0.0
					189	0.1	0.7	-0.7	0.3	-0.7	0.0
					188	0.3	0.8	3.8	0.7	1.0	0.0
				Min	185	-0.1	-0.8	0.9	0.3	-0.0	0.0
					186	-0.3	-0.8	-0.3	-0.0	-2.0	0.0
					189	-0.3	-0.2	-3.3	-1.4	-1.5	0.0
					188	-0.3	-0.2	0.6	-1.2	0.1	0.0
			RC ENV~2	Max	185	0.1	0.0	2.3	1.3	0.4	0.0
					186	0.1	-0.3	1.5	1.0	-1.0	0.0
					189	-0.0	0.5	-1.6	-0.5	-0.7	0.0
					188	0.1	0.5	2.6	-0.3	0.7	0.0
				Min	185	0.0	-0.6	1.5	0.9	0.0	0.0
					186	-0.1	-0.5	0.7	0.6	-1.5	0.0
					189	-0.1	0.0	-2.4	-0.9	-1.1	0.0
					188	-0.1	0.2	1.6	-0.6	0.4	0.0
146	1	1	SX (RS)		187	0.3	0.5	2.6	0.3	0.2	0.0
					188	0.4	0.0	1.0	0.4	0.1	0.0
					191	0.4	0.6	1.2	0.8	0.4	0.0
					190	0.3	0.2	2.2	0.4	0.1	0.0
			SY (RS)		187	0.1	0.4	0.2	0.9	0.1	0.0
					188	0.2	0.4	0.2	1.0	0.2	0.0
					191	0.2	0.6	0.8	1.0	0.1	0.0
					190	0.1	0.2	0.7	0.9	0.0	0.0
			RC ENV~1	Max	187	0.3	0.2	4.0	1.4	0.1	0.0
					188	0.4	0.1	3.3	1.2	-0.4	0.0
					191	0.5	1.1	-0.3	0.9	0.2	0.0
					190	0.3	0.6	3.8	1.1	0.3	0.0
				Min	187	-0.3	-0.9	-1.3	-0.5	-0.3	0.0
					188	-0.4	-0.6	0.7	-0.8	-0.8	0.0
					191	-0.4	-0.3	-2.7	-1.0	-0.6	0.0

					190	-0.3	-0.0	-0.7	-0.8	-0.0	0.0
			RC ENV~2	Max	187	0.1	0.0	2.0	0.7	-0.1	0.0
					188	0.2	-0.2	2.4	0.6	-0.5	0.0
					191	0.2	0.7	-1.3	0.1	-0.0	0.0
					190	0.1	0.4	2.2	0.2	0.2	0.0
				Min	187	-0.2	-0.7	0.4	0.4	-0.2	0.0
					188	-0.2	-0.5	1.7	0.2	-0.6	0.0
					191	-0.2	-0.1	-2.0	-0.4	-0.3	0.0
					190	-0.1	0.2	0.9	-0.0	0.1	0.0
147	1	1	SX (RS)		188	0.1	0.7	1.0	0.3	0.4	0.0
					189	0.7	0.1	1.3	0.4	0.9	0.0
					192	0.1	0.6	3.2	0.4	1.2	0.0
					191	0.9	0.1	4.9	0.1	0.0	0.0
			SY (RS)		188	0.1	0.7	0.7	0.8	0.0	0.0
					189	0.2	0.8	0.9	0.9	0.4	0.0
					192	0.2	0.8	2.1	1.2	0.3	0.0
					191	0.3	0.7	0.6	1.3	0.1	0.0
			RC ENV~1	Max	188	0.2	0.4	3.6	1.4	0.7	0.0
					189	0.6	0.4	3.5	1.1	-0.6	0.0
					192	0.2	1.2	0.3	1.2	0.0	0.0
					191	0.9	1.0	6.9	1.7	1.0	0.0
				Min	188	-0.1	-1.1	1.5	-0.2	-0.2	0.0
					189	-0.7	-1.1	0.2	-0.7	-2.5	0.0
					192	-0.2	-0.5	-6.1	-1.2	-2.3	0.0
					191	-0.9	-0.3	-2.9	-0.8	0.6	0.0
			RC ENV~2	Max	188	0.1	0.0	2.7	1.0	0.3	0.0
					189	0.3	-0.4	2.5	0.6	-1.1	0.0
					192	0.0	0.8	-1.8	0.1	-0.5	0.0
					191	0.4	0.6	3.5	0.5	0.8	0.0
				Min	188	-0.0	-0.8	2.0	0.6	0.1	0.0
					189	-0.3	-0.6	1.4	0.2	-1.8	0.0
					192	-0.1	0.0	-4.1	-0.3	-1.5	0.0
					191	-0.4	0.3	0.2	0.2	0.7	0.0
148	1	1	SX (RS)		190	0.4	0.2	2.5	0.4	0.1	0.0
					191	0.1	0.6	0.8	0.1	0.3	0.0
					31	0.5	0.1	2.0	1.2	0.5	0.0
					20	0.0	0.6	1.1	1.0	0.1	0.0
			SY (RS)		190	0.1	0.3	0.9	0.9	0.0	0.0
					191	0.0	0.1	2.4	1.0	0.1	0.0
					31	0.0	0.2	2.2	0.3	0.0	0.0
					20	0.0	0.2	1.1	0.4	0.0	0.0
			RC ENV~1	Max	190	0.4	0.0	3.8	0.8	0.0	0.0
					191	0.1	0.4	3.8	0.6	-0.2	0.0
					31	0.5	0.4	1.1	1.8	0.3	0.0
					20	0.0	0.9	2.7	1.5	0.2	0.0
				Min	190	-0.4	-0.6	-1.2	-1.1	-0.3	0.0
					191	-0.1	-0.7	-1.0	-1.4	-0.8	0.0
					31	-0.5	0.0	-3.4	-0.5	-0.7	0.0
					20	-0.0	-0.4	0.5	-0.4	-0.1	0.0
			RC ENV~2	Max	190	0.2	-0.2	2.1	0.0	-0.1	0.0
					191	0.0	0.0	2.0	-0.3	-0.4	0.0
					31	0.2	0.3	-0.7	1.0	0.0	0.0
					20	0.0	0.6	2.0	0.9	0.1	0.0
				Min	190	-0.2	-0.4	0.5	-0.2	-0.2	0.0
					191	-0.0	-0.5	1.3	-0.5	-0.6	0.0
					31	-0.2	0.2	-2.0	0.3	-0.3	0.0

				20	0.0	0.0	1.2	0.3	0.0	0.0
149	1	1	SX (RS)	191	1.4	1.1	6.0	0.8	0.7	0.0
				192	0.7	0.7	1.3	0.3	0.3	0.0
				14	2.5	1.4	6.6	2.2	5.1	0.0
				31	0.3	0.9	1.9	0.9	0.2	0.0
			SY (RS)	191	0.5	1.4	2.3	1.3	0.2	0.0
				192	0.7	1.2	2.0	1.3	0.3	0.0
				14	0.6	2.3	3.6	4.0	0.7	0.0
				31	0.5	0.3	0.8	0.9	0.2	0.0
			RC ENV~1 Max	191	1.4	0.9	9.8	1.3	0.7	0.0
				192	0.6	0.7	3.6	0.9	-1.7	0.0
				14	2.5	3.0	0.2	5.0	3.2	0.0
				31	0.8	1.2	6.6	2.3	0.6	0.0
			Min	191	-1.5	-1.8	-2.2	-1.2	-0.7	0.0
				192	-0.9	-1.7	-0.4	-1.7	-3.0	0.0
				14	-2.5	-1.5	-13.1	-2.9	-7.0	-0.0
				31	-0.3	-0.6	2.4	0.5	0.1	0.0
			RC ENV~2 Max	191	0.7	0.2	5.7	0.4	0.1	0.0
				192	0.2	-0.3	2.6	-0.1	-1.9	0.0
				14	1.1	1.7	-5.2	1.7	-0.4	0.0
				31	0.4	0.7	5.0	1.7	0.4	0.0
			Min	191	-0.7	-1.2	2.0	-0.1	-0.3	0.0
				192	-0.5	-1.0	1.5	-0.4	-2.3	0.0
				14	-1.2	-0.1	-9.0	0.3	-3.7	0.0
				31	0.1	-0.1	3.8	1.2	0.3	0.0
150	1	1	SX (RS)	50	0.5	0.1	2.0	1.2	0.5	0.0
				21	0.0	0.6	1.1	1.0	0.1	0.0
				195	0.4	0.2	2.5	0.5	0.1	0.0
				194	0.1	0.6	0.8	0.1	0.3	0.0
			SY (RS)	50	0.0	0.2	2.2	0.3	0.0	0.0
				21	0.0	0.2	1.1	0.4	0.0	0.0
				195	0.1	0.3	0.9	0.9	0.0	0.0
				194	0.0	0.1	2.4	1.0	0.1	0.0
			RC ENV~1 Max	50	0.5	-0.0	1.5	-0.1	1.0	0.0
				21	0.0	0.4	2.3	-0.0	0.2	0.0
				195	0.4	0.6	4.8	1.7	0.2	0.0
				194	0.1	0.8	3.1	1.9	0.8	0.0
			Min	50	-0.5	-0.4	-3.0	-2.5	-0.1	0.0
				21	-0.1	-0.9	0.1	-2.0	-0.1	0.0
				195	-0.4	-0.0	-0.5	-0.1	-0.1	0.0
				194	-0.1	-0.4	-1.8	-0.1	0.2	0.0
			RC ENV~2 Max	50	0.2	-0.2	-0.3	-1.0	0.7	0.0
				21	-0.0	-0.0	1.4	-0.8	0.1	0.0
				195	0.2	0.4	3.4	0.9	0.1	0.0
				194	0.0	0.4	0.9	1.0	0.6	0.0
			Min	50	-0.2	-0.3	-1.6	-1.8	0.3	0.0
				21	-0.0	-0.5	0.5	-1.4	0.0	0.0
				195	-0.2	0.2	1.6	0.6	-0.0	0.0
				194	-0.0	-0.0	0.5	0.8	0.4	0.0
151	1	1	SX (RS)	193	0.1	0.6	3.2	0.4	1.2	0.0
				194	0.9	0.1	4.9	0.1	0.0	0.0
				197	0.1	0.7	1.0	0.3	0.4	0.0
				196	0.7	0.1	1.3	0.4	1.0	0.0
			SY (RS)	193	0.2	0.8	2.1	1.2	0.3	0.0
				194	0.3	0.7	0.6	1.3	0.1	0.0

					197	0.1	0.7	0.7	0.8	0.0	0.0
					196	0.2	0.8	0.9	0.9	0.4	0.0
			RC ENV~1	Max	193	0.2	0.4	1.0	0.4	3.0	0.0
					194	0.8	0.3	7.0	0.4	-0.6	0.0
					197	0.1	1.1	5.7	1.1	-0.1	0.0
					196	0.7	1.2	1.2	1.3	2.8	0.0
				Min	193	-0.2	-1.3	-5.4	-2.0	0.5	0.0
					194	-0.9	-1.1	-2.8	-2.2	-1.0	0.0
					197	-0.2	-0.3	2.3	-0.5	-1.0	0.0
					196	-0.6	-0.3	-1.3	-0.4	0.7	0.0
			RC ENV~2	Max	193	0.0	-0.1	-1.3	-0.6	2.2	0.0
					194	0.3	-0.3	3.4	-0.7	-0.6	0.0
					197	0.0	0.8	4.2	0.3	-0.4	0.0
					196	0.3	0.6	0.5	0.5	2.1	0.0
				Min	193	-0.0	-0.8	-3.6	-1.0	1.3	0.0
					194	-0.4	-0.6	0.0	-1.0	-0.8	0.0
					197	-0.1	0.1	3.3	0.0	-0.7	0.0
					196	-0.2	0.3	-0.2	-0.0	1.4	0.0
152	1	1	SX (RS)		194	0.4	0.6	1.2	0.8	0.4	0.0
					195	0.3	0.2	2.2	0.5	0.1	0.0
					198	0.3	0.5	2.6	0.3	0.2	0.0
					197	0.4	0.0	1.0	0.4	0.1	0.0
			SY (RS)		194	0.2	0.6	0.8	1.0	0.1	0.0
					195	0.1	0.2	0.7	0.9	0.0	0.0
					198	0.1	0.4	0.2	0.9	0.1	0.0
					197	0.2	0.4	0.2	1.0	0.2	0.0
			RC ENV~1	Max	194	0.4	0.3	0.2	0.3	0.9	0.0
					195	0.3	-0.0	3.3	0.1	0.1	0.0
					198	0.3	0.8	5.0	1.2	0.2	0.0
					197	0.4	0.7	2.0	1.4	0.8	0.0
				Min	194	-0.5	-1.0	-2.4	-1.7	-0.0	0.0
					195	-0.3	-0.6	-1.2	-1.7	-0.2	0.0
					198	-0.3	-0.2	-0.6	-0.6	-0.2	0.0
					197	-0.4	-0.1	-0.0	-0.6	0.3	0.0
			RC ENV~2	Max	194	0.1	-0.0	-0.9	-0.5	0.6	0.0
					195	0.1	-0.2	1.6	-0.6	0.0	0.0
					198	0.2	0.6	3.6	0.3	0.1	0.0
					197	0.2	0.4	1.4	0.4	0.6	0.0
				Min	194	-0.2	-0.7	-1.7	-1.0	0.3	0.0
					195	-0.1	-0.4	-0.1	-0.9	-0.1	0.0
					198	-0.1	0.1	1.6	0.0	-0.1	0.0
					197	-0.1	0.2	0.9	-0.1	0.5	0.0
153	1	1	SX (RS)		196	0.2	0.5	1.2	0.3	0.4	0.0
					197	0.3	0.1	1.6	0.5	0.4	0.0
					200	0.2	0.5	1.3	0.3	0.3	0.0
					199	0.3	0.0	1.1	0.5	0.7	0.0
			SY (RS)		196	0.2	0.4	0.8	0.8	0.1	0.0
					197	0.1	0.5	0.2	1.0	0.2	0.0
					200	0.2	0.4	0.4	0.6	0.0	0.0
					199	0.0	0.5	0.7	0.7	0.2	0.0
			RC ENV~1	Max	196	0.3	0.2	-0.3	0.4	2.4	0.0
					197	0.3	0.1	3.9	0.6	-0.1	0.0
					200	0.1	0.8	5.1	0.8	-0.1	0.0
					199	0.3	0.9	0.5	0.9	2.4	0.0
				Min	196	-0.1	-0.8	-2.8	-1.3	1.1	0.0
					197	-0.3	-0.9	0.7	-1.3	-0.9	0.0

					200	-0.3	-0.2	1.7	-0.4	-0.9	0.0
					199	-0.3	-0.2	-1.7	-0.7	0.8	0.0
			RC ENV~2	Max	196	0.2	-0.1	-1.0	-0.1	1.8	0.0
					197	0.1	-0.3	2.6	0.1	-0.3	0.0
					200	0.0	0.5	3.8	0.2	-0.5	0.0
					199	0.1	0.5	-0.4	0.2	1.8	0.0
				Min	196	0.0	-0.5	-2.0	-0.5	1.5	0.0
					197	-0.1	-0.5	1.4	-0.4	-0.6	0.0
					200	-0.2	0.1	3.0	-0.2	-0.7	0.0
					199	-0.1	0.3	-1.0	-0.4	1.3	0.0
154	1	1	SX (RS)		197	0.0	0.6	0.6	0.4	0.3	0.0
					198	0.2	0.5	2.4	0.3	0.2	0.0
					201	0.1	0.7	2.2	0.5	0.2	0.0
					200	0.2	0.4	0.7	0.6	0.3	0.0
			SY (RS)		197	0.0	0.5	0.8	0.8	0.0	0.0
					198	0.1	0.4	0.2	0.9	0.1	0.0
					201	0.0	0.4	0.2	0.7	0.0	0.0
					200	0.1	0.4	0.6	0.7	0.1	0.0
			RC ENV~1	Max	197	0.0	0.2	0.4	0.5	0.8	0.0
					198	0.2	0.2	3.5	0.6	0.2	0.0
					201	0.1	1.1	4.6	0.7	0.2	0.0
					200	0.2	0.8	1.1	0.8	0.8	0.0
				Min	197	-0.0	-0.9	-1.2	-1.2	0.2	0.0
					198	-0.2	-0.8	-1.3	-1.2	-0.2	0.0
					201	-0.1	-0.4	-0.2	-0.7	-0.2	0.0
					200	-0.1	-0.1	-0.2	-0.9	0.1	0.0
			RC ENV~2	Max	197	0.0	-0.1	-0.3	-0.1	0.6	0.0
					198	0.1	-0.1	1.5	-0.0	0.1	0.0
					201	0.0	0.7	3.3	0.1	0.0	0.0
					200	0.1	0.6	0.6	0.1	0.6	0.0
				Min	197	-0.0	-0.7	-0.7	-0.3	0.4	0.0
					198	-0.1	-0.6	-0.2	-0.3	-0.1	0.0
					201	-0.0	-0.0	1.8	-0.4	-0.1	0.0
					200	-0.0	0.1	0.3	-0.5	0.3	0.0
155	1	1	SX (RS)		199	0.1	0.4	1.3	0.3	0.6	0.0
					200	0.1	0.3	1.3	0.5	0.4	0.0
					203	0.1	0.4	1.2	0.4	0.4	0.0
					202	0.1	0.2	1.3	0.5	0.7	0.0
			SY (RS)		199	0.1	0.2	0.8	0.6	0.0	0.0
					200	0.1	0.4	0.4	0.7	0.1	0.0
					203	0.1	0.3	0.4	0.4	0.1	0.0
					202	0.1	0.4	0.7	0.4	0.1	0.0
			RC ENV~1	Max	199	0.2	0.2	0.3	0.4	2.5	0.0
					200	0.1	0.1	3.9	0.8	-0.0	0.0
					203	0.0	0.6	4.3	0.6	-0.1	0.0
					202	0.1	0.7	0.1	0.7	2.4	0.0
				Min	199	-0.0	-0.6	-2.2	-0.8	0.9	0.0
					200	-0.1	-0.7	1.3	-0.8	-0.9	0.0
					203	-0.3	-0.2	1.5	-0.5	-1.0	0.0
					202	-0.1	-0.0	-2.8	-0.8	0.9	0.0
			RC ENV~2	Max	199	0.2	-0.1	-0.1	0.2	1.9	0.0
					200	0.0	-0.2	2.8	0.5	-0.3	0.0
					203	-0.1	0.4	3.2	0.2	-0.5	0.0
					202	0.0	0.5	-1.2	0.2	1.8	0.0
				Min	199	0.1	-0.3	-1.2	-0.2	1.4	0.0
					200	0.0	-0.5	1.9	-0.1	-0.6	0.0

					203	-0.2	0.0	2.7	-0.3	-0.8	0.0
					202	-0.0	0.2	-2.0	-0.5	1.3	0.0
156	1	1	SX (RS)		200	0.1	0.6	0.7	0.5	0.3	0.0
					201	0.0	0.7	2.0	0.5	0.2	0.0
					204	0.1	0.8	2.0	0.5	0.2	0.0
					203	0.0	0.6	0.7	0.6	0.3	0.0
			SY (RS)		200	0.0	0.3	0.7	0.6	0.0	0.0
					201	0.0	0.4	0.2	0.7	0.0	0.0
					204	0.0	0.4	0.3	0.4	0.0	0.0
					203	0.0	0.4	0.7	0.4	0.0	0.0
			RC ENV~1	Max	200	0.1	0.3	0.9	0.5	0.9	0.0
					201	0.0	0.4	3.3	0.7	0.2	0.0
					204	0.0	1.1	4.1	0.6	0.2	0.0
					203	0.0	0.9	0.6	0.7	0.7	0.0
				Min	200	-0.0	-0.9	-0.5	-0.7	0.2	0.0
					201	-0.0	-1.1	-0.8	-0.7	-0.2	0.0
					204	-0.1	-0.4	-0.2	-0.8	-0.3	0.0
					203	-0.0	-0.2	-0.9	-1.1	0.1	0.0
			RC ENV~2	Max	200	0.0	-0.0	0.6	0.2	0.7	0.0
					201	0.0	0.0	1.4	0.4	0.1	0.0
					204	0.0	0.7	2.9	0.1	-0.0	0.0
					203	0.0	0.6	-0.0	0.1	0.5	0.0
				Min	200	0.0	-0.6	0.0	-0.1	0.5	0.0
					201	-0.0	-0.7	0.1	-0.1	-0.0	0.0
					204	-0.0	-0.0	1.8	-0.5	-0.2	0.0
					203	-0.0	0.0	-0.6	-0.7	0.3	0.0
157	1	1	SX (RS)		202	0.2	0.4	1.1	0.4	0.7	0.0
					203	0.1	0.4	1.1	0.5	0.3	0.0
					206	0.2	0.4	1.4	0.5	0.4	0.0
					205	0.1	0.4	1.4	0.4	0.4	0.0
			SY (RS)		202	0.0	0.4	0.9	0.4	0.1	0.0
					203	0.2	0.4	0.5	0.5	0.0	0.0
					206	0.1	0.4	0.4	0.2	0.2	0.0
					205	0.2	0.4	0.9	0.2	0.1	0.0
			RC ENV~1	Max	202	0.5	0.3	1.3	0.5	2.8	0.0
					203	0.2	0.1	4.0	1.1	-0.1	0.0
					206	0.1	0.5	3.7	1.0	-0.2	0.0
					205	0.2	0.8	-0.6	0.8	2.3	0.0
				Min	202	-0.1	-0.5	-1.3	-0.7	1.0	0.0
					203	-0.1	-0.8	1.9	-0.6	-0.8	0.0
					206	-0.5	-0.3	1.0	-0.1	-1.4	0.0
					205	-0.3	-0.0	-4.3	-0.5	1.2	0.0
			RC ENV~2	Max	202	0.4	-0.1	0.8	0.3	2.1	0.0
					203	0.1	-0.1	3.0	0.7	-0.3	0.0
					206	-0.1	0.2	2.7	0.6	-0.6	0.0
					205	0.0	0.6	-1.9	0.4	1.7	0.0
				Min	202	0.1	-0.2	-0.2	-0.2	1.5	0.0
					203	-0.0	-0.6	2.6	-0.1	-0.6	0.0
					206	-0.4	0.0	2.3	0.0	-1.0	0.0
					205	-0.1	0.1	-3.1	-0.3	1.4	0.0
158	1	1	SX (RS)		203	0.1	0.5	0.7	0.6	0.3	0.0
					204	0.1	0.8	2.0	0.5	0.2	0.0
					207	0.2	0.7	2.2	0.4	0.2	0.0
					206	0.0	0.6	0.7	0.6	0.3	0.0
			SY (RS)		203	0.1	0.3	0.8	0.3	0.1	0.0

					204	0.0	0.4	0.3	0.4	0.0	0.0
					207	0.1	0.4	0.2	0.2	0.1	0.0
					206	0.1	0.4	0.9	0.2	0.0	0.0
			RC ENV~1	Max	203	0.2	0.3	2.1	0.5	1.1	0.0
					204	0.1	0.4	3.4	0.8	0.3	0.0
					207	0.1	0.9	4.0	0.8	0.1	0.0
					206	0.1	0.9	0.1	0.8	0.7	0.0
				Min	203	-0.0	-0.8	0.0	-0.8	0.2	0.0
					204	-0.0	-1.1	-0.6	-0.6	-0.2	0.0
					207	-0.3	-0.4	-0.4	-0.4	-0.3	0.0
					206	-0.1	-0.3	-2.6	-0.8	0.2	0.0
			RC ENV~2	Max	203	0.2	0.0	1.5	0.3	0.8	0.0
					204	0.1	0.0	1.4	0.5	0.2	0.0
					207	-0.0	0.5	2.9	0.4	-0.1	0.0
					206	0.0	0.6	-0.8	0.3	0.5	0.0
				Min	203	0.0	-0.4	0.7	-0.2	0.5	0.0
					204	-0.0	-0.7	0.4	-0.1	0.0	0.0
					207	-0.2	-0.1	1.8	-0.2	-0.2	0.0
					206	-0.0	0.0	-1.8	-0.4	0.3	0.0
159	1	1	SX (RS)		205	0.6	0.4	1.7	0.5	1.1	0.0
					206	0.1	0.6	0.8	0.5	0.4	0.0
					209	0.8	0.4	5.6	0.1	0.1	0.0
					208	0.2	0.5	4.2	0.4	1.7	0.0
			SY (RS)		205	0.2	0.8	1.2	0.2	0.4	0.0
					206	0.2	0.7	1.1	0.2	0.1	0.0
					209	0.3	0.6	1.1	0.6	0.2	0.0
					208	0.3	0.8	2.7	0.6	0.6	0.0
			RC ENV~1	Max	205	1.0	0.7	1.5	0.3	4.1	0.0
					206	0.2	0.3	5.9	0.8	-0.0	0.0
					209	0.4	0.7	9.5	1.6	-0.6	0.0
					208	0.4	1.2	-0.4	1.4	5.0	0.0
				Min	205	-0.3	-0.8	-1.9	-1.0	1.1	0.0
					206	-0.2	-1.0	2.8	-0.8	-0.8	0.0
					209	-1.3	-0.5	-1.6	0.4	-1.4	0.0
					208	-0.2	-0.5	-11.2	0.2	0.9	0.0
			RC ENV~2	Max	205	0.7	-0.0	0.8	0.1	3.0	0.0
					206	0.0	-0.1	4.5	0.5	-0.3	0.0
					209	-0.1	0.1	6.4	1.1	-0.7	0.0
					208	0.2	0.7	-3.6	0.9	3.7	0.0
				Min	205	0.1	-0.1	-0.4	-0.5	1.9	0.0
					206	-0.1	-0.7	3.5	-0.3	-0.4	0.0
					209	-0.9	0.0	2.7	0.6	-1.0	0.0
					208	0.0	0.1	-8.1	0.3	2.0	0.0
160	1	1	SX (RS)		206	0.4	0.5	1.2	0.5	0.1	0.0
					207	0.3	0.7	2.3	0.4	0.2	0.0
					210	0.3	0.6	1.9	0.4	0.1	0.0
					209	0.4	0.7	1.4	0.7	0.4	0.0
			SY (RS)		206	0.2	0.4	0.5	0.3	0.2	0.0
					207	0.1	0.4	0.2	0.2	0.1	0.0
					210	0.1	0.6	0.6	0.4	0.1	0.0
					209	0.2	0.4	1.2	0.4	0.2	0.0
			RC ENV~1	Max	206	0.6	0.5	2.5	0.1	1.2	0.0
					207	0.4	0.4	3.7	0.4	0.3	0.0
					210	0.1	0.6	4.2	1.2	0.1	0.0
					209	0.2	1.0	0.3	1.3	0.8	0.0
				Min	206	-0.2	-0.6	-0.2	-1.0	0.4	0.0

					207	-0.2	-0.9	-0.9	-0.8	-0.1	0.0
					210	-0.4	-0.6	-0.0	0.2	-0.3	0.0
					209	-0.6	-0.4	-3.0	-0.2	-0.1	0.0
			RC ENV~2	Max	206	0.4	0.1	1.8	-0.0	0.9	0.0
					207	0.3	0.1	1.4	0.2	0.2	0.0
					210	-0.0	-0.0	3.0	0.8	-0.1	0.0
					209	0.0	0.7	-1.1	0.6	0.4	0.0
				Min	206	0.0	-0.1	0.8	-0.6	0.6	0.0
					207	-0.0	-0.5	0.5	-0.4	0.1	0.0
					210	-0.3	-0.2	1.9	0.3	-0.2	0.0
					209	-0.4	-0.0	-2.1	-0.0	0.2	0.0
161	1	1	SX (RS)		208	0.5	0.7	2.0	0.5	0.3	0.0
					209	1.3	1.0	6.2	0.7	0.7	0.0
					211	0.5	0.9	3.0	0.6	0.5	0.0
					10	2.3	1.1	7.2	1.7	6.2	0.0
			SY (RS)		208	0.7	1.4	2.7	0.6	0.5	0.0
					209	0.7	1.4	3.7	0.6	0.3	0.0
					211	0.6	0.4	1.6	0.6	0.4	0.0
					10	0.9	2.6	5.5	4.2	1.8	0.0
			RC ENV~1	Max	208	1.0	1.5	8.2	-0.4	4.7	0.0
					209	1.9	0.8	9.8	0.4	0.7	0.0
					211	0.7	0.7	6.2	3.5	0.2	0.0
					10	1.4	3.3	0.8	6.3	6.8	0.0
				Min	208	-0.4	-1.3	0.0	-1.6	2.2	0.0
					209	-0.8	-1.9	-2.5	-1.2	-0.8	0.0
					211	-0.5	-1.1	0.2	1.4	-0.7	0.0
					10	-3.4	-2.0	-13.6	-2.1	-5.5	-0.0
			RC ENV~2	Max	208	0.7	0.4	5.8	-0.4	3.5	0.0
					209	1.3	-0.1	4.9	0.2	0.3	0.0
					211	0.4	0.0	4.4	2.6	-0.1	0.0
					10	0.1	1.4	-6.1	2.4	2.3	0.0
				Min	208	0.1	-0.1	2.4	-1.2	2.7	0.0
					209	-0.1	-1.2	2.3	-0.5	-0.2	0.0
					211	-0.1	-0.7	2.8	1.8	-0.4	0.0
					10	-2.4	0.1	-9.6	1.7	-1.4	0.0
162	1	1	SX (RS)		209	0.0	0.7	1.2	0.2	0.5	0.0
					210	0.3	0.6	2.0	0.4	0.1	0.0
					22	0.1	0.8	0.9	0.9	0.1	0.0
					211	0.4	0.5	2.8	1.1	0.6	0.0
			SY (RS)		209	0.1	0.6	2.9	0.5	0.3	0.0
					210	0.1	0.6	0.6	0.4	0.1	0.0
					22	0.1	0.6	1.1	0.7	0.1	0.0
					211	0.1	0.6	2.8	1.3	0.1	0.0
			RC ENV~1	Max	209	0.1	0.8	2.9	-0.6	0.9	0.0
					210	0.5	0.6	3.4	-0.2	0.3	0.0
					22	0.1	0.6	3.6	1.7	0.1	0.0
					211	0.2	0.6	3.0	2.1	0.8	0.0
				Min	209	-0.1	-0.6	-2.9	-1.7	0.0	0.0
					210	-0.2	-0.6	-0.7	-1.2	-0.1	0.0
					22	-0.1	-1.0	0.5	-0.0	-0.1	0.0
					211	-0.6	-0.5	-2.7	-0.4	-0.3	0.0
			RC ENV~2	Max	209	0.1	0.4	0.5	-0.7	0.7	0.0
					210	0.3	0.2	1.4	-0.3	0.2	0.0
					22	0.0	-0.1	2.6	0.9	0.0	0.0
					211	0.0	0.0	0.7	0.9	0.3	0.0
				Min	209	0.0	0.0	-0.3	-1.3	0.4	0.0

					210	-0.0	0.0	0.4	-0.8	0.1	0.0
					22	-0.0	-0.5	1.6	0.4	-0.1	0.0
					211	-0.4	-0.1	-0.8	0.4	0.0	0.0
163	1	1	SX (RS)		211	0.4	0.5	3.0	0.9	0.5	0.0
					22	0.0	0.8	0.8	0.9	0.1	0.0
					214	0.3	0.6	1.5	0.4	0.1	0.0
					213	0.0	0.7	1.3	0.4	0.5	0.0
			SY (RS)		211	0.2	0.4	2.5	0.7	0.3	0.0
					22	0.1	0.6	1.0	0.7	0.1	0.0
					214	0.1	0.4	1.2	1.0	0.1	0.0
					213	0.1	0.5	2.9	1.0	0.2	0.0
			RC ENV~1	Max	211	0.3	0.5	2.9	0.1	0.7	0.0
					22	0.1	1.0	2.7	0.0	0.1	0.0
					214	0.5	0.6	3.5	1.6	0.2	0.0
					213	0.2	0.6	3.1	2.0	1.0	0.0
				Min	211	-0.6	-0.5	-3.0	-1.8	-0.2	0.0
					22	-0.1	-0.6	0.6	-1.7	-0.1	0.0
					214	-0.2	-0.6	-0.2	-0.3	0.0	0.0
					213	-0.1	-0.8	-2.7	0.0	-0.0	0.0
			RC ENV~2	Max	211	0.0	0.1	0.8	-0.4	0.4	0.0
					22	0.0	0.5	1.7	-0.4	0.1	0.0
					214	0.3	-0.0	2.5	0.7	0.1	0.0
					213	0.1	-0.0	0.4	1.1	0.6	0.0
				Min	211	-0.4	-0.0	-0.7	-0.9	0.1	0.0
					22	-0.0	0.1	0.9	-0.9	-0.0	0.0
					214	-0.0	-0.2	1.2	0.1	0.0	0.0
					213	0.0	-0.4	-0.4	0.3	0.4	0.0
164	1	1	SX (RS)		212	0.2	0.6	3.9	0.2	1.8	0.0
					213	0.8	0.5	5.4	0.3	0.2	0.0
					216	0.1	0.7	0.3	0.3	0.2	0.0
					215	0.6	0.4	1.8	0.6	1.2	0.0
			SY (RS)		212	0.2	0.9	3.0	1.3	0.6	0.0
					213	0.5	0.7	1.7	1.3	0.1	0.0
					216	0.2	0.7	1.5	0.6	0.3	0.0
					215	0.4	0.9	1.1	0.6	0.6	0.0
			RC ENV~1	Max	212	0.4	0.6	-1.0	0.6	5.3	0.0
					213	0.4	0.7	9.5	0.3	-0.6	0.0
					216	0.2	1.0	6.9	0.7	-0.2	0.0
					215	0.9	0.9	1.9	0.9	4.2	0.0
				Min	212	-0.1	-1.1	-11.0	-2.1	0.8	0.0
					213	-1.2	-0.8	-1.4	-2.2	-1.3	0.0
					216	-0.2	-0.4	2.4	-1.2	-0.8	0.0
					215	-0.3	-0.8	-1.7	-1.2	1.2	0.0
			RC ENV~2	Max	212	0.2	0.0	-3.6	-0.1	3.8	0.0
					213	-0.0	0.1	6.0	-0.2	-0.8	0.0
					216	0.0	0.6	5.1	0.1	-0.4	0.0
					215	0.6	0.0	0.4	0.4	3.1	0.0
				Min	212	0.1	-0.5	-8.0	-0.8	2.1	0.0
					213	-0.8	-0.1	2.2	-1.0	-1.0	0.0
					216	-0.1	-0.0	3.9	-0.7	-0.6	0.0
					215	0.0	-0.1	-0.2	-0.7	1.9	0.0
165	1	1	SX (RS)		213	0.4	0.8	1.6	0.5	0.3	0.0
					214	0.3	0.6	1.3	0.4	0.1	0.0
					217	0.3	0.7	1.5	0.4	0.1	0.0
					216	0.4	0.5	1.3	0.6	0.1	0.0

			SY (RS)	213	0.3	0.4	1.2	1.1	0.3	0.0
				214	0.1	0.4	1.2	1.0	0.1	0.0
				217	0.2	0.2	1.5	0.7	0.1	0.0
				216	0.2	0.4	0.4	0.7	0.2	0.0
		RC ENV~1	Max	213	0.3	0.5	0.2	0.7	0.7	0.0
				214	0.1	0.6	3.2	0.3	-0.0	0.0
				217	0.4	0.9	3.7	0.9	0.2	0.0
				216	0.6	0.6	2.4	1.1	1.1	0.0
			Min	213	-0.5	-1.0	-2.9	-1.6	-0.0	0.0
				214	-0.4	-0.6	0.6	-1.6	-0.2	0.0
				217	-0.2	-0.5	-0.0	-1.1	-0.0	0.0
				216	-0.2	-0.5	-0.1	-1.1	0.5	0.0
		RC ENV~2	Max	213	0.0	0.1	-1.4	0.1	0.5	0.0
				214	-0.0	0.2	2.1	-0.1	-0.0	0.0
				217	0.2	0.4	2.6	0.2	0.1	0.0
				216	0.4	0.0	1.4	0.4	0.8	0.0
			Min	213	-0.4	-0.6	-1.9	-0.5	0.3	0.0
				214	-0.3	0.0	1.0	-0.7	-0.1	0.0
				217	-0.0	-0.1	1.4	-0.7	0.0	0.0
				216	0.0	-0.1	1.0	-0.6	0.6	0.0
166	1	1	SX (RS)	215	0.1	0.5	0.8	0.2	0.3	0.0
				216	0.3	0.5	1.0	0.6	0.4	0.0
				219	0.1	0.6	0.3	0.4	0.2	0.0
				218	0.3	0.4	0.1	0.5	0.7	0.0
			SY (RS)	215	0.3	0.3	1.2	0.7	0.3	0.0
				216	0.3	0.5	1.1	0.7	0.2	0.0
				219	0.2	0.2	1.2	0.3	0.2	0.0
				218	0.2	0.5	1.1	0.2	0.2	0.0
		RC ENV~1	Max	215	0.3	0.3	-1.0	1.0	2.6	0.0
				216	0.1	0.4	3.5	1.1	-0.3	0.0
				219	0.2	0.8	4.8	0.2	-0.3	0.0
				218	0.4	0.6	1.0	0.5	2.9	0.0
			Min	215	-0.3	-0.7	-3.7	-0.8	1.3	0.0
				216	-0.4	-0.5	1.4	-1.0	-1.3	0.0
				219	-0.2	-0.4	1.8	-1.6	-1.0	0.0
				218	-0.1	-0.4	-1.1	-1.7	1.1	0.0
		RC ENV~2	Max	215	0.1	0.0	-1.7	0.6	2.0	0.0
				216	-0.1	0.0	2.5	0.7	-0.6	0.0
				219	0.1	0.4	3.6	-0.2	-0.5	0.0
				218	0.3	0.1	0.1	0.0	2.2	0.0
			Min	215	-0.1	-0.4	-2.7	-0.2	1.6	0.0
				216	-0.3	-0.1	1.8	-0.4	-1.0	0.0
				219	-0.1	-0.0	3.0	-1.1	-0.7	0.0
				218	0.1	-0.0	-0.4	-1.1	1.6	0.0
167	1	1	SX (RS)	216	0.0	0.7	0.3	0.4	0.1	0.0
				217	0.2	0.7	1.3	0.4	0.1	0.0
				220	0.1	0.8	0.6	0.6	0.0	0.0
				219	0.1	0.6	0.4	0.7	0.3	0.0
			SY (RS)	216	0.1	0.2	1.1	0.7	0.2	0.0
				217	0.2	0.2	1.5	0.7	0.1	0.0
				220	0.1	0.1	1.6	0.2	0.1	0.0
				219	0.1	0.2	0.9	0.3	0.2	0.0
		RC ENV~1	Max	216	0.1	0.5	0.1	1.1	0.9	0.0
				217	0.1	0.5	3.3	1.1	0.0	0.0
				220	0.1	1.1	3.5	0.4	0.2	0.0
				219	0.2	0.8	1.7	0.6	1.1	0.0

				Min	216	-0.1	-0.9	-2.1	-0.8	0.3	0.0
					217	-0.3	-0.9	0.3	-0.9	-0.2	0.0
					220	-0.1	-0.5	-0.1	-1.7	-0.1	0.0
					219	-0.1	-0.4	-0.1	-1.8	0.3	0.0
			RC ENV~2	Max	216	0.0	0.1	-0.7	0.7	0.7	0.0
					217	-0.0	0.1	1.9	0.7	-0.0	0.0
					220	0.0	0.6	2.5	-0.1	0.1	0.0
					219	0.2	0.3	0.9	0.0	0.8	0.0
				Min	216	-0.0	-0.5	-1.6	-0.1	0.4	0.0
					217	-0.2	-0.4	0.8	-0.2	-0.1	0.0
					220	-0.0	-0.1	1.5	-1.1	-0.0	0.0
					219	0.0	-0.1	0.6	-1.1	0.5	0.0
168	1	1	SX (RS)		218	0.1	0.4	0.6	0.4	0.7	0.0
					219	0.1	0.5	0.6	0.5	0.3	0.0
					222	0.1	0.5	0.6	0.5	0.3	0.0
					221	0.1	0.4	0.6	0.4	0.7	0.0
			SY (RS)		218	0.2	0.2	1.0	0.3	0.2	0.0
					219	0.2	0.2	1.1	0.3	0.2	0.0
					222	0.2	0.2	1.1	0.3	0.2	0.0
					221	0.2	0.2	1.0	0.3	0.2	0.0
			RC ENV~1	Max	218	0.3	0.3	-0.4	1.5	2.9	0.0
					219	0.1	0.3	4.0	1.8	-0.3	0.0
					222	0.1	0.6	4.4	0.3	-0.2	0.0
					221	0.3	0.6	-0.0	0.3	2.8	0.0
				Min	218	-0.2	-0.6	-2.4	-0.3	1.0	0.0
					219	-0.3	-0.6	1.7	-0.4	-1.0	0.0
					222	-0.3	-0.3	1.6	-1.4	-1.2	0.0
					221	-0.2	-0.3	-2.7	-1.7	1.0	0.0
			RC ENV~2	Max	218	0.1	0.0	-0.7	1.0	2.1	0.0
					219	-0.1	0.0	3.0	1.2	-0.4	0.0
					222	-0.1	0.2	3.3	-0.1	-0.5	0.0
					221	0.1	0.2	-1.0	-0.0	2.1	0.0
				Min	218	0.1	-0.2	-1.5	0.1	1.6	0.0
					219	-0.1	-0.2	2.5	0.0	-0.8	0.0
					222	-0.1	-0.0	2.7	-0.9	-0.9	0.0
					221	0.1	-0.0	-1.9	-1.1	1.5	0.0
169	1	1	SX (RS)		219	0.0	0.7	0.4	0.5	0.2	0.0
					220	0.0	0.8	0.4	0.6	0.0	0.0
					223	0.0	0.8	0.3	0.6	0.0	0.0
					222	0.0	0.7	0.3	0.5	0.2	0.0
			SY (RS)		219	0.1	0.1	0.9	0.3	0.1	0.0
					220	0.1	0.1	1.6	0.2	0.1	0.0
					223	0.1	0.1	1.6	0.2	0.1	0.0
					222	0.1	0.1	0.9	0.3	0.1	0.0
			RC ENV~1	Max	219	0.1	0.5	0.8	1.6	1.0	0.0
					220	0.1	0.5	3.3	1.7	0.1	0.0
					223	0.1	1.1	3.4	0.4	0.1	0.0
					222	0.1	0.9	1.0	0.4	0.8	0.0
				Min	219	-0.1	-0.9	-1.1	-0.3	0.2	0.0
					220	-0.1	-1.1	0.2	-0.4	-0.2	0.0
					223	-0.1	-0.5	-0.1	-1.6	-0.2	0.0
					222	-0.1	-0.5	-0.9	-1.8	0.3	0.0
			RC ENV~2	Max	219	0.0	0.1	0.3	1.0	0.7	0.0
					220	0.0	0.1	1.8	1.1	0.0	0.0
					223	0.0	0.6	2.4	-0.1	-0.0	0.0
					222	0.0	0.5	0.1	-0.1	0.6	0.0

				Min	219	-0.0	-0.5	-0.2	0.2	0.5	0.0
					220	-0.0	-0.6	1.0	0.1	-0.1	0.0
					223	-0.0	-0.1	1.4	-1.1	-0.1	0.0
					222	-0.0	-0.1	-0.6	-1.2	0.4	0.0
170	1	1	SX (RS)		221	0.3	0.4	0.1	0.5	0.7	0.0
					222	0.1	0.6	0.3	0.4	0.2	0.0
					225	0.3	0.5	1.0	0.6	0.4	0.0
					224	0.1	0.5	0.8	0.2	0.3	0.0
			SY (RS)		221	0.2	0.5	1.1	0.2	0.2	0.0
					222	0.2	0.2	1.2	0.3	0.2	0.0
					225	0.3	0.5	1.1	0.7	0.2	0.0
					224	0.3	0.3	1.2	0.7	0.3	0.0
			RC ENV~1	Max	221	0.4	0.4	1.2	1.4	3.1	0.0
					222	0.2	0.4	4.3	1.9	-0.4	0.0
					225	0.1	0.5	3.7	0.9	-0.3	0.0
					224	0.3	0.7	-0.7	0.8	2.6	0.0
				Min	221	-0.1	-0.6	-1.5	-0.4	1.0	0.0
					222	-0.3	-0.8	2.0	-0.2	-0.9	0.0
					225	-0.4	-0.4	1.2	-0.7	-1.5	0.0
					224	-0.3	-0.3	-4.9	-1.1	1.4	0.0
			RC ENV~2	Max	221	0.3	0.0	0.7	0.9	2.3	0.0
					222	0.1	0.0	3.3	1.2	-0.5	0.0
					225	-0.1	0.1	2.8	0.3	-0.6	0.0
					224	0.1	0.4	-1.8	0.2	1.9	0.0
				Min	221	0.1	-0.1	-0.4	0.1	1.7	0.0
					222	-0.1	-0.4	3.1	0.2	-0.7	0.0
					225	-0.3	-0.1	2.2	-0.4	-1.1	0.0
					224	-0.1	-0.0	-3.5	-0.7	1.6	0.0
171	1	1	SX (RS)		222	0.1	0.6	0.4	0.7	0.3	0.0
					223	0.1	0.8	0.6	0.6	0.0	0.0
					226	0.2	0.7	1.3	0.4	0.1	0.0
					225	0.0	0.7	0.3	0.4	0.1	0.0
			SY (RS)		222	0.1	0.2	0.9	0.3	0.2	0.0
					223	0.1	0.1	1.6	0.2	0.1	0.0
					226	0.2	0.2	1.5	0.7	0.1	0.0
					225	0.1	0.2	1.1	0.7	0.2	0.0
			RC ENV~1	Max	222	0.2	0.4	2.0	1.4	1.2	0.0
					223	0.1	0.5	3.4	1.6	0.2	0.0
					226	0.1	0.9	3.7	0.8	0.1	0.0
					225	0.1	0.9	0.3	0.8	0.8	0.0
				Min	222	-0.1	-0.8	-0.3	-0.5	0.3	0.0
					223	-0.1	-1.1	0.2	-0.4	-0.1	0.0
					226	-0.3	-0.5	0.1	-1.0	-0.3	0.0
					225	-0.1	-0.5	-3.0	-1.3	0.3	0.0
			RC ENV~2	Max	222	0.2	0.1	1.4	0.9	0.9	0.0
					223	0.0	0.1	1.8	1.1	0.1	0.0
					226	-0.0	0.4	2.7	0.2	-0.1	0.0
					225	0.0	0.5	-0.8	0.1	0.6	0.0
				Min	222	0.0	-0.3	0.6	0.1	0.6	0.0
					223	-0.0	-0.6	1.2	0.1	0.0	0.0
					226	-0.2	-0.1	1.5	-0.6	-0.2	0.0
					225	-0.0	-0.1	-2.0	-0.8	0.4	0.0
172	1	1	SX (RS)		224	0.6	0.4	1.8	0.6	1.2	0.0
					225	0.1	0.7	0.3	0.3	0.2	0.0
					228	0.8	0.4	5.4	0.3	0.2	0.0
					227	0.2	0.6	3.9	0.2	1.8	0.0

			SY (RS)	224	0.4	0.8	1.1	0.6	0.6	0.0
				225	0.2	0.7	1.5	0.6	0.3	0.0
				228	0.5	0.7	1.7	1.3	0.1	0.0
				227	0.2	0.8	3.0	1.3	0.6	0.0
		RC ENV~1	Max	224	0.9	0.8	2.1	0.8	4.5	0.0
				225	0.2	0.4	6.7	1.4	-0.2	0.0
				228	0.4	0.8	9.3	2.1	-0.6	0.0
				227	0.4	1.1	-0.8	2.0	5.3	0.0
			Min	224	-0.3	-0.9	-2.0	-0.8	1.1	0.0
				225	-0.2	-1.0	2.5	-0.7	-0.7	0.0
				228	-1.2	-0.7	-1.5	-0.5	-1.7	0.0
				227	-0.1	-0.6	-12.1	-0.6	0.9	0.0
		RC ENV~2	Max	224	0.6	0.1	1.3	0.5	3.3	0.0
				225	0.0	0.1	5.0	0.9	-0.4	0.0
				228	-0.0	0.1	6.3	1.1	-0.8	0.0
				227	0.2	0.5	-4.3	0.8	3.9	0.0
			Min	224	0.0	-0.0	-0.3	-0.3	2.1	0.0
				225	-0.1	-0.6	4.0	-0.1	-0.5	0.0
				228	-0.8	-0.1	2.5	0.6	-1.2	0.0
				227	0.1	-0.0	-8.6	0.2	2.2	0.0
173	1	1	SX (RS)	225	0.4	0.5	1.3	0.6	0.1	0.0
				226	0.3	0.7	1.5	0.4	0.1	0.0
				229	0.3	0.6	1.3	0.4	0.1	0.0
				228	0.4	0.8	1.6	0.5	0.3	0.0
			SY (RS)	225	0.2	0.4	0.4	0.7	0.2	0.0
				226	0.2	0.2	1.5	0.7	0.1	0.0
				229	0.1	0.4	1.2	1.0	0.1	0.0
				228	0.3	0.4	1.2	1.1	0.3	0.0
		RC ENV~1	Max	225	0.6	0.5	3.0	0.6	1.4	0.0
				226	0.4	0.5	3.2	1.0	0.3	0.0
				229	0.1	0.6	4.1	1.5	0.0	0.0
				228	0.3	1.0	0.3	1.5	0.7	0.0
			Min	225	-0.2	-0.6	-0.3	-1.0	0.4	0.0
				226	-0.2	-0.9	0.2	-0.8	-0.1	0.0
				229	-0.4	-0.6	0.4	-0.4	-0.3	0.0
				228	-0.5	-0.5	-4.0	-0.7	0.1	0.0
		RC ENV~2	Max	225	0.4	0.1	2.1	0.3	1.0	0.0
				226	0.2	0.1	1.9	0.6	0.2	0.0
				229	-0.0	-0.0	2.9	0.7	-0.1	0.0
				228	0.0	0.6	-1.2	0.4	0.4	0.0
			Min	225	0.0	-0.0	0.9	-0.3	0.6	0.0
				226	-0.0	-0.4	1.0	-0.2	0.1	0.0
				229	-0.3	-0.2	1.6	0.2	-0.2	0.0
				228	-0.4	-0.1	-2.8	-0.1	0.3	0.0
174	1	1	SX (RS)	227	0.6	0.7	1.7	0.6	0.4	0.0
				228	1.3	1.1	6.0	0.5	0.6	0.0
				230	0.5	0.9	3.1	0.8	0.6	0.0
				13	2.3	1.2	7.5	1.7	6.1	0.0
			SY (RS)	227	0.8	1.5	3.0	1.3	0.6	0.0
				228	0.8	1.5	4.4	1.4	0.5	0.0
				230	0.6	0.6	1.1	1.3	0.2	0.0
				13	1.1	2.7	6.0	5.2	2.1	0.0
		RC ENV~1	Max	227	1.0	1.7	8.8	0.5	5.3	0.0
				228	1.8	1.0	9.8	1.1	0.5	0.0
				230	0.7	0.7	6.3	3.9	0.3	0.0
				13	1.4	3.2	0.8	7.1	6.8	0.0

				Min	227	-0.5	-1.3	-0.2	-2.1	2.2	0.0
					228	-0.8	-1.9	-2.2	-1.7	-0.8	0.0
					230	-0.4	-1.1	0.0	0.6	-0.8	0.0
					13	-3.2	-2.2	-16.5	-3.2	-5.4	-0.0
			RC ENV~2	Max	227	0.6	0.6	6.1	-0.5	3.8	0.0
					228	1.2	0.1	5.8	0.2	0.2	0.0
					230	0.5	0.0	4.5	2.8	-0.2	0.0
					13	0.2	1.1	-6.4	2.9	2.6	-0.0
				Min	227	0.0	0.0	2.6	-1.2	2.7	0.0
					228	-0.1	-1.0	2.9	-0.3	-0.3	0.0
					230	-0.1	-0.7	3.0	1.9	-0.6	0.0
					13	-2.2	-0.1	-11.7	1.9	-1.1	-0.0
175	1	1	SX (RS)		228	0.0	0.7	1.3	0.4	0.5	0.0
					229	0.3	0.6	1.5	0.4	0.1	0.0
					23	0.0	0.8	0.8	0.9	0.1	0.0
					230	0.4	0.5	3.0	0.9	0.5	0.0
			SY (RS)		228	0.1	0.5	2.9	1.0	0.2	0.0
					229	0.1	0.4	1.2	1.0	0.1	0.0
					23	0.1	0.6	1.0	0.7	0.1	0.0
					230	0.2	0.4	2.5	0.7	0.3	0.0
			RC ENV~1	Max	228	0.2	0.8	2.9	0.1	1.2	0.0
					229	0.5	0.6	3.1	0.4	0.3	0.0
					23	0.1	0.6	3.6	1.6	0.1	0.0
					230	0.3	0.5	3.0	1.7	0.8	0.0
				Min	228	-0.1	-0.6	-2.9	-1.8	-0.0	0.0
					229	-0.2	-0.6	0.1	-1.5	-0.0	0.0
					23	-0.1	-1.0	0.4	-0.2	-0.2	0.0
					230	-0.6	-0.5	-2.9	-0.2	-0.2	0.0
			RC ENV~2	Max	228	0.1	0.4	0.9	-0.7	0.8	0.0
					229	0.3	0.2	1.8	-0.2	0.2	0.0
					23	0.0	-0.1	2.5	0.9	0.0	0.0
					230	0.0	0.0	0.3	0.8	0.4	0.0
				Min	228	0.0	0.0	-0.1	-1.3	0.5	0.0
					229	-0.0	0.0	0.8	-0.7	0.1	0.0
					23	-0.0	-0.5	1.4	0.7	-0.1	0.0
					230	-0.4	-0.1	-1.5	0.5	0.1	0.0
176	1	1	SX (RS)		230	0.4	0.5	2.8	1.1	0.6	0.0
					23	0.1	0.8	0.9	0.9	0.1	0.0
					233	0.3	0.6	2.0	0.4	0.1	0.0
					232	0.0	0.7	1.2	0.2	0.5	0.0
			SY (RS)		230	0.1	0.6	2.8	1.3	0.1	0.0
					23	0.1	0.6	1.1	0.7	0.1	0.0
					233	0.1	0.5	0.6	0.4	0.1	0.0
					232	0.1	0.5	2.9	0.5	0.3	0.0
			RC ENV~1	Max	230	0.3	0.5	2.8	0.5	0.8	0.0
					23	0.1	1.0	2.9	0.2	0.2	0.0
					233	0.5	0.6	3.4	1.2	0.2	0.0
					232	0.1	0.6	3.0	1.9	1.0	0.0
				Min	230	-0.6	-0.6	-2.8	-2.0	-0.3	0.0
					23	-0.1	-0.6	0.7	-1.6	-0.1	0.0
					233	-0.2	-0.6	-0.8	0.2	-0.0	0.0
					232	-0.1	-0.8	-2.8	0.5	0.1	0.0
			RC ENV~2	Max	230	0.0	0.1	0.9	-0.7	0.6	0.0
					23	0.0	0.5	1.9	-0.7	0.1	0.0
					233	0.3	-0.0	2.4	0.9	0.1	0.0
					232	0.0	-0.0	0.2	1.4	0.6	0.0

			Min	230	-0.4	-0.0	-0.6	-1.0	0.2	0.0
				23	-0.0	0.1	1.1	-0.9	-0.0	0.0
				233	-0.0	-0.2	1.1	0.6	-0.0	0.0
				232	0.0	-0.4	-0.9	0.8	0.4	0.0
177	1	1	SX (RS)	231	0.2	0.5	4.2	0.4	1.7	0.0
				232	0.8	0.4	5.6	0.1	0.1	0.0
				235	0.1	0.6	0.7	0.5	0.4	0.0
				234	0.6	0.4	1.7	0.5	1.1	0.0
			SY (RS)	231	0.3	0.8	2.7	0.6	0.6	0.0
				232	0.3	0.6	1.1	0.6	0.2	0.0
				235	0.2	0.7	1.1	0.2	0.1	0.0
				234	0.2	0.8	1.2	0.2	0.4	0.0
			RC ENV~1 Max	231	0.4	0.5	-0.5	-0.2	5.5	0.0
				232	0.4	0.5	9.6	-0.2	-0.6	0.0
				235	0.2	1.0	7.6	0.8	-0.0	0.0
				234	1.0	0.8	1.6	0.8	4.4	0.0
			Min	231	-0.2	-1.2	-10.9	-1.6	0.9	0.0
				232	-1.2	-0.7	-1.5	-1.7	-1.3	0.0
				235	-0.2	-0.3	2.8	-0.4	-0.9	0.0
				234	-0.3	-0.7	-2.9	-0.2	1.1	0.0
			RC ENV~2 Max	231	0.2	-0.1	-3.4	-0.7	4.0	0.0
				232	-0.1	-0.0	6.5	-0.8	-0.8	0.0
				235	0.0	0.7	5.5	0.5	-0.4	0.0
				234	0.7	0.1	0.1	0.6	3.2	0.0
			Min	231	0.0	-0.7	-7.9	-1.2	2.3	0.0
				232	-0.9	-0.1	2.8	-1.2	-1.0	0.0
				235	-0.1	0.1	3.8	0.0	-0.7	0.0
				234	0.1	0.1	-1.8	0.3	2.1	0.0
178	1	1	SX (RS)	232	0.4	0.7	1.4	0.7	0.4	0.0
				233	0.3	0.6	1.9	0.4	0.1	0.0
				236	0.3	0.7	2.3	0.4	0.2	0.0
				235	0.4	0.5	1.2	0.5	0.1	0.0
			SY (RS)	232	0.2	0.4	1.2	0.4	0.2	0.0
				233	0.1	0.6	0.6	0.4	0.1	0.0
				236	0.1	0.4	0.2	0.2	0.1	0.0
				235	0.2	0.4	0.5	0.3	0.2	0.0
			RC ENV~1 Max	232	0.2	0.4	0.1	0.3	0.8	0.0
				233	0.1	0.6	3.9	-0.2	0.0	0.0
				236	0.4	0.9	3.6	0.6	0.3	0.0
				235	0.6	0.6	2.3	0.9	1.2	0.0
			Min	232	-0.6	-1.0	-2.7	-1.1	-0.1	0.0
				233	-0.4	-0.6	0.1	-1.2	-0.2	0.0
				236	-0.2	-0.4	-1.0	-0.2	-0.1	0.0
				235	-0.2	-0.5	-0.2	-0.1	0.5	0.0
			RC ENV~2 Max	232	0.0	0.0	-1.0	-0.4	0.6	0.0
				233	-0.0	0.2	2.5	-0.6	0.0	0.0
				236	0.3	0.5	2.4	0.4	0.2	0.0
				235	0.4	0.1	1.4	0.6	0.9	0.0
			Min	232	-0.4	-0.7	-1.9	-0.6	0.3	0.0
				233	-0.3	0.0	1.4	-0.9	-0.1	0.0
				236	-0.0	-0.1	1.2	0.1	0.0	0.0
				235	0.0	-0.0	0.3	0.2	0.6	0.0
179	1	1	SX (RS)	234	0.1	0.4	1.4	0.4	0.4	0.0
				235	0.2	0.4	1.4	0.5	0.4	0.0
				238	0.1	0.4	1.1	0.5	0.3	0.0
				237	0.2	0.4	1.1	0.4	0.7	0.0

			SY (RS)	234	0.2	0.4	0.9	0.2	0.1	0.0
				235	0.1	0.4	0.4	0.2	0.2	0.0
				238	0.2	0.4	0.5	0.5	0.0	0.0
				237	0.0	0.4	0.9	0.4	0.1	0.0
		RC ENV~1	Max	234	0.2	0.1	-0.8	0.2	3.2	0.0
				235	0.1	0.3	4.0	0.1	-0.3	0.0
				238	0.2	0.8	5.9	0.4	-0.1	0.0
				237	0.5	0.6	1.0	0.5	3.3	0.0
			Min	234	-0.3	-0.8	-4.6	-0.9	1.2	0.0
				235	-0.5	-0.5	1.1	-0.9	-1.3	0.0
				238	-0.1	-0.1	1.9	-0.7	-1.0	0.0
				237	-0.1	-0.3	-2.4	-0.4	1.1	0.0
		RC ENV~2	Max	234	0.0	-0.1	-2.1	-0.2	2.3	0.0
				235	-0.1	-0.1	3.0	-0.3	-0.6	0.0
				238	0.1	0.6	4.2	0.2	-0.4	0.0
				237	0.3	0.2	0.0	0.3	2.4	0.0
			Min	234	-0.1	-0.6	-3.4	-0.6	1.6	0.0
				235	-0.4	-0.2	2.5	-0.7	-1.0	0.0
				238	-0.0	0.1	2.9	-0.3	-0.7	0.0
				237	0.1	0.1	-1.5	0.0	1.7	0.0
180	1	1	SX (RS)	235	0.0	0.6	0.7	0.6	0.3	0.0
				236	0.2	0.7	2.2	0.4	0.2	0.0
				239	0.1	0.8	2.0	0.5	0.2	0.0
				238	0.1	0.5	0.7	0.6	0.3	0.0
			SY (RS)	235	0.1	0.4	0.9	0.2	0.0	0.0
				236	0.1	0.4	0.2	0.2	0.1	0.0
				239	0.0	0.4	0.3	0.4	0.0	0.0
				238	0.1	0.3	0.8	0.3	0.1	0.0
		RC ENV~1	Max	235	0.1	0.3	-0.1	0.5	0.9	0.0
				236	0.1	0.4	4.1	0.2	0.1	0.0
				239	0.1	1.1	3.3	0.4	0.3	0.0
				238	0.2	0.7	1.6	0.6	1.1	0.0
			Min	235	-0.1	-0.9	-2.5	-0.6	0.2	0.0
				236	-0.3	-0.9	-0.2	-0.6	-0.3	0.0
				239	-0.0	-0.5	-0.7	-0.6	-0.1	0.0
				238	-0.0	-0.3	0.1	-0.6	0.3	0.0
		RC ENV~2	Max	235	0.0	-0.0	-0.8	0.0	0.7	0.0
				236	-0.0	0.1	2.4	-0.1	-0.0	0.0
				239	0.1	0.7	2.4	0.1	0.1	0.0
				238	0.2	0.4	1.2	0.1	0.8	0.0
			Min	235	-0.0	-0.6	-1.8	-0.4	0.4	0.0
				236	-0.2	-0.5	1.4	-0.4	-0.2	0.0
				239	-0.0	-0.1	1.1	-0.2	-0.0	0.0
				238	0.0	-0.0	0.3	-0.1	0.5	0.0
181	1	1	SX (RS)	237	0.1	0.2	1.3	0.5	0.7	0.0
				238	0.1	0.4	1.2	0.4	0.4	0.0
				241	0.1	0.3	1.3	0.5	0.4	0.0
				240	0.1	0.4	1.3	0.3	0.6	0.0
			SY (RS)	237	0.1	0.4	0.7	0.4	0.1	0.0
				238	0.1	0.3	0.4	0.4	0.1	0.0
				241	0.1	0.4	0.4	0.7	0.1	0.0
				240	0.1	0.2	0.8	0.6	0.0	0.0
		RC ENV~1	Max	237	0.1	0.0	-0.2	0.5	3.2	0.0
				238	0.0	0.2	4.9	0.4	-0.2	0.0
				241	0.1	0.8	5.4	0.6	-0.0	0.0

					240	0.2	0.6	0.5	0.7	3.2	0.0
				Min	237	-0.1	-0.7	-3.5	-0.6	0.9	0.0
					238	-0.3	-0.6	1.6	-0.5	-1.0	0.0
					241	-0.1	-0.1	1.3	-0.8	-0.9	0.0
					240	-0.0	-0.2	-3.1	-0.6	1.0	0.0
			RC ENV~2	Max	237	0.0	-0.2	-1.5	0.1	2.3	0.0
					238	-0.1	-0.1	3.6	-0.0	-0.5	0.0
					241	0.0	0.5	3.9	0.2	-0.4	0.0
					240	0.2	0.3	-0.6	0.3	2.3	0.0
				Min	237	-0.0	-0.5	-2.5	-0.4	1.5	0.0
					238	-0.2	-0.4	2.8	-0.2	-0.8	0.0
					241	0.0	0.2	2.5	-0.4	-0.7	0.0
					240	0.1	0.1	-2.1	-0.0	1.6	0.0
182	1	1	SX (RS)		238	0.0	0.6	0.7	0.6	0.3	0.0
					239	0.1	0.8	2.0	0.5	0.2	0.0
					242	0.0	0.7	2.0	0.5	0.2	0.0
					241	0.1	0.6	0.7	0.5	0.3	0.0
			SY (RS)		238	0.0	0.4	0.7	0.4	0.0	0.0
					239	0.0	0.4	0.3	0.4	0.0	0.0
					242	0.0	0.4	0.2	0.7	0.0	0.0
					241	0.0	0.3	0.7	0.6	0.0	0.0
			RC ENV~1	Max	238	0.0	0.2	0.5	0.8	0.9	0.0
					239	0.0	0.5	3.9	0.6	0.1	0.0
					242	0.0	1.1	3.2	0.5	0.2	0.0
					241	0.1	0.9	1.0	0.5	0.9	0.0
				Min	238	-0.0	-0.9	-1.1	-0.5	0.1	0.0
					239	-0.1	-1.1	-0.1	-0.4	-0.3	0.0
					242	-0.0	-0.4	-0.9	-0.8	-0.2	0.0
					241	-0.0	-0.3	-0.5	-0.7	0.2	0.0
			RC ENV~2	Max	238	0.0	-0.0	-0.2	0.4	0.6	0.0
					239	0.0	0.1	2.6	0.2	0.0	0.0
					242	0.0	0.7	2.2	0.0	0.1	0.0
					241	0.0	0.6	0.5	0.0	0.7	0.0
				Min	238	-0.0	-0.6	-0.8	-0.1	0.4	0.0
					239	-0.0	-0.7	1.5	-0.1	-0.1	0.0
					242	-0.0	-0.0	0.7	-0.3	-0.0	0.0
					241	0.0	0.0	-0.3	-0.1	0.5	0.0
183	1	1	SX (RS)		240	0.3	0.0	1.1	0.5	0.7	0.0
					241	0.2	0.5	1.3	0.3	0.3	0.0
					244	0.3	0.1	1.6	0.5	0.4	0.0
					243	0.2	0.5	1.2	0.3	0.4	0.0
			SY (RS)		240	0.0	0.5	0.7	0.7	0.2	0.0
					241	0.2	0.4	0.4	0.6	0.0	0.0
					244	0.1	0.5	0.2	1.0	0.2	0.0
					243	0.2	0.4	0.8	0.8	0.1	0.0
			RC ENV~1	Max	240	0.3	0.2	0.2	0.7	3.2	0.0
					241	0.1	0.2	5.9	0.6	-0.2	0.0
					244	0.3	0.9	4.9	1.1	-0.1	0.0
					243	0.3	0.8	-0.2	1.0	3.3	0.0
				Min	240	-0.3	-0.9	-2.6	-0.6	0.9	0.0
					241	-0.3	-0.8	1.9	-0.6	-1.0	0.0
					244	-0.3	-0.2	0.7	-0.8	-1.0	0.0
					243	-0.1	-0.2	-3.9	-0.6	1.2	0.0
			RC ENV~2	Max	240	0.1	-0.3	-0.8	0.3	2.3	0.0
					241	0.0	-0.1	4.3	0.1	-0.5	0.0
					244	0.1	0.6	3.5	0.4	-0.4	0.0

					243	0.2	0.5	-1.3	0.5	2.4	0.0
				Min	240	-0.1	-0.5	-1.8	-0.3	1.5	0.0
					241	-0.1	-0.5	3.1	-0.1	-0.7	0.0
					244	-0.1	0.3	2.1	-0.1	-0.7	0.0
					243	0.0	0.1	-2.7	0.2	1.6	0.0
184	1	1	SX (RS)		241	0.2	0.4	0.7	0.6	0.3	0.0
					242	0.1	0.7	2.2	0.5	0.2	0.0
					245	0.2	0.5	2.4	0.3	0.2	0.0
					244	0.0	0.6	0.6	0.4	0.3	0.0
			SY (RS)		241	0.1	0.4	0.6	0.7	0.1	0.0
					242	0.0	0.4	0.2	0.7	0.0	0.0
					245	0.1	0.4	0.2	0.9	0.1	0.0
					244	0.0	0.4	0.8	0.8	0.0	0.0
			RC ENV~1	Max	241	0.2	0.1	1.0	0.9	1.0	0.0
					242	0.1	0.4	4.3	0.8	0.2	0.0
					245	0.2	0.8	3.5	1.0	0.2	0.0
					244	0.0	0.9	0.5	0.9	0.9	0.0
				Min	241	-0.1	-0.8	-0.3	-0.6	0.1	0.0
					242	-0.1	-1.1	-0.1	-0.5	-0.2	0.0
					245	-0.2	-0.2	-1.4	-0.8	-0.2	0.0
					244	-0.0	-0.2	-1.3	-0.8	0.2	0.0
			RC ENV~2	Max	241	0.1	-0.1	0.4	0.4	0.7	0.0
					242	0.0	0.0	3.0	0.3	0.0	0.0
					245	0.1	0.6	2.1	0.2	0.1	0.0
					244	0.0	0.7	-0.3	0.2	0.7	0.0
				Min	241	-0.0	-0.6	0.1	-0.1	0.4	0.0
					242	-0.0	-0.7	1.5	-0.0	-0.1	0.0
					245	-0.1	0.1	0.3	-0.0	-0.1	0.0
					244	-0.0	0.0	-0.9	0.0	0.5	0.0
185	1	1	SX (RS)		243	0.7	0.1	1.3	0.4	0.9	0.0
					244	0.1	0.7	1.0	0.3	0.4	0.0
					247	0.9	0.1	4.9	0.1	0.0	0.0
					246	0.1	0.6	3.2	0.4	1.2	0.0
			SY (RS)		243	0.2	0.8	0.9	0.9	0.4	0.0
					244	0.1	0.7	0.7	0.8	0.0	0.0
					247	0.3	0.7	0.6	1.3	0.1	0.0
					246	0.2	0.8	2.1	1.2	0.3	0.0
			RC ENV~1	Max	243	0.7	0.3	1.1	0.7	3.6	0.0
					244	0.1	0.3	6.5	0.7	-0.1	0.0
					247	0.8	1.0	7.0	1.9	-0.6	0.0
					246	0.2	1.3	0.9	1.8	3.7	0.0
				Min	243	-0.6	-1.2	-1.4	-1.1	0.8	0.0
					244	-0.2	-1.1	2.5	-0.9	-1.1	0.0
					247	-0.9	-0.3	-2.8	-0.6	-1.3	0.0
					246	-0.2	-0.4	-5.6	-0.6	0.6	0.0
			RC ENV~2	Max	243	0.3	-0.4	-0.1	0.0	2.6	0.0
					244	0.0	-0.1	4.8	-0.0	-0.5	0.0
					247	0.4	0.6	4.0	1.0	-0.7	0.0
					246	0.0	0.8	-1.6	1.0	2.7	0.0
				Min	243	-0.3	-0.6	-0.9	-0.5	1.7	0.0
					244	-0.1	-0.8	3.4	-0.3	-0.8	0.0
					247	-0.3	0.3	0.5	0.6	-1.0	0.0
					246	-0.0	0.1	-4.0	0.5	1.7	0.0
186	1	1	SX (RS)		244	0.4	0.1	1.0	0.4	0.1	0.0
					245	0.3	0.5	2.6	0.3	0.2	0.0
					248	0.3	0.2	2.2	0.4	0.1	0.0

					247	0.4	0.6	1.2	0.8	0.4	0.0
				SY (RS)	244	0.2	0.4	0.2	1.0	0.2	0.0
					245	0.1	0.4	0.2	0.9	0.1	0.0
					248	0.1	0.2	0.7	0.9	0.0	0.0
					247	0.2	0.6	0.8	1.0	0.1	0.0
			RC ENV~1	Max	244	0.4	0.1	2.0	0.9	1.1	0.0
					245	0.3	0.2	4.8	0.8	0.2	0.0
					248	0.3	0.6	3.3	1.5	0.1	0.0
					247	0.4	1.0	0.1	1.5	1.0	0.0
				Min	244	-0.4	-0.7	-0.1	-1.1	0.4	0.0
					245	-0.3	-0.8	-0.5	-1.0	-0.2	0.0
					248	-0.3	0.0	-1.1	-0.4	-0.2	0.0
					247	-0.5	-0.3	-2.9	-0.5	0.0	0.0
			RC ENV~2	Max	244	0.2	-0.3	1.2	0.1	0.8	0.0
					245	0.2	-0.1	3.4	0.0	0.1	0.0
					248	0.1	0.4	2.1	0.9	0.0	0.0
					247	0.2	0.7	-1.0	0.9	0.7	0.0
				Min	244	-0.2	-0.5	0.7	-0.4	0.5	0.0
					245	-0.1	-0.6	1.5	-0.2	-0.1	0.0
					248	-0.1	0.2	0.4	0.5	-0.1	0.0
					247	-0.2	0.0	-2.0	0.3	0.4	0.0
187	1	1		SX (RS)	246	0.7	0.7	1.3	0.3	0.3	0.0
					247	1.4	1.1	6.0	0.8	0.7	0.0
					36	0.3	0.9	1.9	0.9	0.2	0.0
					16	2.5	1.4	6.6	2.2	5.1	0.0
				SY (RS)	246	0.7	1.2	2.0	1.3	0.3	0.0
					247	0.5	1.4	2.3	1.3	0.2	0.0
					36	0.5	0.3	0.8	0.9	0.2	0.0
					16	0.6	2.3	3.6	4.0	0.7	0.0
			RC ENV~1	Max	246	0.9	0.6	2.3	0.7	4.9	0.0
					247	1.5	0.8	11.4	0.8	0.4	0.0
					36	0.3	1.2	9.1	3.2	-0.1	0.0
					16	2.5	3.1	0.2	5.3	7.7	0.0
				Min	246	-0.5	-1.8	-1.7	-1.9	2.1	0.0
					247	-1.4	-1.9	-1.3	-1.7	-1.0	0.0
					36	-0.8	-0.6	2.7	0.6	-0.9	0.0
					16	-2.5	-1.4	-15.7	-2.6	-2.5	-0.0
			RC ENV~2	Max	246	0.5	-0.4	0.6	-0.5	3.6	0.0
					247	0.6	0.0	8.1	-0.3	-0.2	0.0
					36	-0.1	0.7	6.6	2.3	-0.4	0.0
					16	1.1	1.6	-6.1	2.6	5.3	-0.0
				Min	246	-0.2	-1.1	-0.5	-0.9	2.5	0.0
					247	-0.6	-1.1	4.0	-0.9	-0.6	0.0
					36	-0.5	-0.0	4.5	1.5	-0.6	0.0
					16	-0.9	0.1	-11.2	1.1	1.9	-0.0
188	1	1		SX (RS)	247	0.1	0.6	0.8	0.1	0.3	0.0
					248	0.4	0.2	2.5	0.4	0.1	0.0
					24	0.0	0.6	1.1	1.0	0.1	0.0
					36	0.5	0.1	2.0	1.2	0.5	0.0
				SY (RS)	247	0.0	0.1	2.4	1.0	0.1	0.0
					248	0.1	0.3	0.9	0.9	0.0	0.0
					24	0.0	0.2	1.1	0.4	0.0	0.0
					36	0.0	0.2	2.2	0.3	0.0	0.0
			RC ENV~1	Max	247	0.1	0.4	3.1	0.3	1.2	0.0
					248	0.4	0.0	4.7	0.4	0.2	0.0

					24	0.0	0.9	2.9	1.8	0.2	0.0
					36	0.5	0.4	1.3	2.3	1.1	0.0
				Min	247	-0.1	-0.7	-1.7	-1.7	0.2	0.0
					248	-0.4	-0.6	-0.4	-1.5	-0.1	0.0
					24	-0.0	-0.4	0.2	-0.1	-0.1	0.0
					36	-0.5	0.0	-3.1	-0.1	-0.1	0.0
			RC ENV~2	Max	247	0.0	-0.0	0.8	-0.7	0.8	0.0
					248	0.2	-0.2	3.4	-0.5	0.1	0.0
					24	-0.0	0.6	2.1	1.3	0.1	0.0
					36	0.2	0.3	-0.7	1.7	0.8	0.0
				Min	247	-0.0	-0.5	0.3	-1.0	0.5	0.0
					248	-0.2	-0.4	1.5	-0.9	-0.0	0.0
					24	-0.0	0.0	1.0	0.7	-0.0	0.0
					36	-0.2	0.2	-2.0	0.9	0.4	0.0
351	1	1	SX (RS)		109	1.3	0.1	1.9	0.7	1.7	0.0
					110	0.7	0.5	0.5	0.4	1.1	0.0
					402	1.2	0.1	1.7	0.2	1.2	0.0
					401	0.6	0.6	0.4	0.2	1.5	0.0
			SY (RS)		109	0.3	0.4	3.1	0.2	0.2	0.0
					110	0.6	0.3	0.5	0.3	0.2	0.0
					402	0.3	0.5	0.5	0.9	0.2	0.0
					401	0.5	0.4	3.1	0.8	0.2	0.0
			RC ENV~1	Max	109	1.1	0.2	0.1	-1.1	2.5	0.0
					110	0.7	0.6	3.3	-1.1	1.2	0.0
					402	1.5	0.7	5.7	1.6	1.5	0.0
					401	0.6	0.6	4.0	1.8	2.4	0.0
				Min	109	-1.6	-0.6	-6.9	-2.8	-0.9	0.0
					110	-0.7	-0.5	1.1	-2.5	-0.9	0.0
					402	-1.0	-0.3	2.0	-0.2	-0.9	0.0
					401	-0.5	-0.7	-2.2	0.2	-0.6	0.0
			RC ENV~2	Max	109	0.3	-0.1	-2.3	-1.6	1.4	0.0
					110	0.3	0.3	2.4	-1.5	0.6	0.0
					402	0.8	0.3	4.3	0.7	0.8	0.0
					401	0.3	0.2	1.7	1.2	1.6	0.0
				Min	109	-0.9	-0.3	-5.0	-2.1	0.2	0.0
					110	-0.4	-0.2	1.5	-1.8	-0.2	0.0
					402	-0.3	0.2	3.1	0.5	-0.0	0.0
					401	-0.3	-0.3	0.7	1.0	0.4	0.0
352	1	1	SX (RS)		110	0.8	0.0	0.4	0.3	1.2	0.0
					111	0.4	0.3	0.4	0.2	0.9	0.0
					403	0.8	0.1	0.8	0.2	0.9	0.0
					402	0.4	0.4	0.7	0.2	1.1	0.0
			SY (RS)		110	0.2	0.4	1.0	0.7	0.3	0.0
					111	0.6	0.3	0.9	0.5	0.3	0.0
					403	0.2	0.4	0.8	0.6	0.3	0.0
					402	0.5	0.2	0.8	0.6	0.2	0.0
			RC ENV~1	Max	110	0.7	0.2	-1.2	-0.3	1.1	0.0
					111	0.6	0.3	4.9	-0.3	2.2	0.0
					403	1.0	0.5	3.5	1.2	2.4	0.0
					402	0.6	0.4	0.7	1.3	1.0	0.0
				Min	110	-1.0	-0.6	-4.3	-1.6	-1.3	0.0
					111	-0.6	-0.3	2.1	-1.3	0.4	0.0
					403	-0.6	-0.2	1.6	-0.1	0.3	0.0
					402	-0.5	-0.4	-0.9	0.2	-1.2	0.0
			RC ENV~2	Max	110	0.2	-0.2	-2.1	-0.7	0.2	0.0
					111	0.2	0.1	3.7	-0.8	1.6	0.0

					403	0.5	0.3	2.7	0.6	1.8	0.0
					402	0.3	0.1	0.3	0.8	0.3	0.0
				Min	110	-0.5	-0.3	-3.2	-1.0	-0.7	0.0
					111	-0.3	-0.1	2.9	-0.9	1.0	0.0
					403	-0.2	0.2	2.2	0.3	1.1	0.0
					402	-0.2	-0.1	-0.2	0.7	-0.5	0.0
353	1	1	SX (RS)		111	0.6	0.1	0.4	0.2	0.9	0.0
					112	0.2	0.2	0.4	0.1	0.6	0.0
					404	0.6	0.1	0.7	0.2	0.6	0.0
					403	0.2	0.3	0.6	0.1	0.9	0.0
			SY (RS)		111	0.0	0.3	1.0	0.4	0.3	0.0
					112	0.6	0.3	1.0	0.5	0.3	0.0
					404	0.0	0.2	0.8	0.5	0.3	0.0
					403	0.6	0.3	0.8	0.6	0.3	0.0
			RC ENV~1	Max	111	0.5	0.1	1.5	-0.0	-0.2	0.0
					112	0.6	0.3	2.7	0.2	2.7	0.0
					404	0.7	0.3	2.2	1.1	2.7	0.0
					403	0.6	0.3	0.5	1.2	-0.3	0.0
				Min	111	-0.7	-0.4	-0.5	-0.9	-2.3	0.0
					112	-0.6	-0.3	0.6	-0.9	1.0	0.0
					404	-0.4	-0.1	0.6	0.0	0.8	0.0
					403	-0.5	-0.3	-1.1	-0.1	-2.1	0.0
			RC ENV~2	Max	111	0.1	-0.1	0.5	-0.3	-1.0	0.0
					112	0.2	0.0	2.0	-0.3	2.0	0.0
					404	0.3	0.2	1.5	0.5	2.0	0.0
					403	0.2	0.1	0.2	0.6	-0.9	0.0
				Min	111	-0.4	-0.2	-0.1	-0.5	-1.7	0.0
					112	-0.2	-0.0	1.6	-0.4	1.6	0.0
					404	-0.1	0.1	1.1	0.3	1.5	0.0
					403	-0.1	-0.1	-0.3	0.4	-1.5	0.0
354	1	1	SX (RS)		112	0.4	0.2	0.4	0.1	0.6	0.0
					113	0.1	0.2	0.5	0.1	0.3	0.0
					405	0.4	0.2	0.6	0.1	0.4	0.0
					404	0.1	0.2	0.6	0.1	0.6	0.0
			SY (RS)		112	0.2	0.2	1.0	0.4	0.3	0.0
					113	0.7	0.3	1.5	0.6	0.3	0.0
					405	0.1	0.2	1.1	0.5	0.4	0.0
					404	0.6	0.3	0.7	0.7	0.3	0.0
			RC ENV~1	Max	112	0.4	0.2	2.7	-0.1	-0.8	0.0
					113	0.7	0.3	1.8	0.3	2.4	0.0
					405	0.5	0.3	2.0	1.1	2.2	0.0
					404	0.6	0.3	1.1	1.1	-1.0	0.0
				Min	112	-0.5	-0.3	0.7	-0.8	-2.6	0.0
					113	-0.6	-0.3	-1.1	-0.8	1.3	0.0
					405	-0.3	-0.2	-0.2	0.1	0.9	0.0
					404	-0.6	-0.3	-0.5	-0.3	-2.6	0.0
			RC ENV~2	Max	112	0.1	-0.0	1.8	-0.3	-1.5	0.0
					113	0.1	-0.0	0.5	-0.2	1.8	0.0
					405	0.2	0.1	1.0	0.6	1.6	0.0
					404	0.1	0.1	0.7	0.4	-1.5	0.0
				Min	112	-0.2	-0.1	1.4	-0.4	-1.9	0.0
					113	-0.1	-0.1	0.2	-0.3	1.6	0.0
					405	-0.1	0.0	0.6	0.3	1.3	0.0
					404	-0.1	0.0	0.2	0.2	-2.0	0.0
355	1	1	SX (RS)		113	0.3	0.2	0.5	0.1	0.4	0.0
					114	0.2	0.2	0.6	0.2	0.1	0.0

					406	0.3	0.3	0.5	0.1	0.1	0.0
					405	0.2	0.2	0.7	0.1	0.3	0.0
				SY (RS)	113	0.3	0.2	1.4	0.3	0.4	0.0
					114	0.7	0.5	1.6	1.0	0.2	0.0
					406	0.3	0.1	1.0	0.5	0.6	0.0
					405	0.7	0.4	0.8	0.9	0.3	0.0
			RC ENV~1	Max	113	0.3	0.2	4.2	-0.4	-1.0	0.0
					114	0.8	0.4	0.4	0.5	1.5	0.0
					406	0.3	0.3	1.6	1.4	1.2	0.0
					405	0.7	0.5	2.2	1.3	-1.3	0.0
				Min	113	-0.3	-0.3	1.5	-1.0	-2.3	0.0
					114	-0.7	-0.6	-2.8	-1.5	0.8	0.0
					406	-0.3	-0.2	-0.5	0.3	0.1	0.0
					405	-0.7	-0.3	0.1	-0.5	-2.5	0.0
			RC ENV~2	Max	113	0.1	-0.0	3.0	-0.5	-1.4	0.0
					114	0.1	-0.1	-1.1	-0.4	1.2	0.0
					406	0.1	0.2	0.6	0.8	0.8	0.0
					405	-0.0	0.2	1.6	0.4	-1.6	0.0
				Min	113	-0.1	-0.1	2.7	-0.7	-1.7	0.0
					114	0.0	-0.2	-1.7	-0.6	1.1	0.0
					406	-0.1	0.0	0.3	0.6	0.6	0.0
					405	-0.1	0.1	0.9	0.2	-1.9	0.0
356	1	1		SX (RS)	114	0.2	0.4	0.5	0.3	0.1	0.0
					115	0.6	0.2	1.9	0.4	0.5	0.0
					407	0.2	0.4	0.2	0.0	0.5	0.0
					406	0.5	0.2	1.3	0.1	0.1	0.0
				SY (RS)	114	0.4	0.2	0.6	0.3	0.6	0.0
					115	0.8	0.4	5.7	0.8	0.3	0.0
					407	0.4	0.4	5.6	1.0	0.5	0.0
					406	0.8	0.5	0.6	1.3	0.2	0.0
			RC ENV~1	Max	114	0.5	0.3	5.4	-1.2	-0.2	0.0
					115	0.8	0.3	0.7	-0.8	0.3	0.0
					407	0.3	0.4	7.3	2.2	-0.1	0.0
					406	0.7	0.6	5.1	1.8	-1.0	0.0
				Min	114	-0.4	-0.4	3.1	-2.2	-1.4	0.0
					115	-0.7	-0.5	-10.6	-2.5	-0.7	0.0
					407	-0.4	-0.4	-4.0	0.1	-1.3	0.0
					406	-0.9	-0.4	1.5	-0.8	-1.7	0.0
			RC ENV~2	Max	114	0.1	0.0	4.1	-1.4	-0.8	0.0
					115	0.2	-0.1	-4.7	-1.5	-0.1	0.0
					407	0.0	0.1	1.8	1.1	-0.5	0.0
					406	0.0	0.3	3.7	0.5	-1.2	0.0
				Min	114	0.0	-0.1	3.7	-1.6	-1.0	0.0
					115	-0.0	-0.2	-6.4	-1.9	-0.5	0.0
					407	-0.1	-0.1	1.4	1.0	-1.0	0.0
					406	-0.1	0.1	2.7	0.3	-1.3	0.0
357	1	1		SX (RS)	115	0.4	0.7	1.7	0.3	0.5	0.0
					6	1.7	0.7	3.8	0.9	3.5	0.0
					408	0.3	0.6	1.3	0.2	0.5	0.0
					407	1.1	0.6	3.4	0.3	0.6	0.0
				SY (RS)	115	0.8	0.2	3.1	1.1	1.0	0.0
					6	1.4	3.2	5.2	7.3	0.8	0.0
					408	0.9	1.4	3.0	1.9	0.3	0.0
					407	1.2	2.0	5.2	2.1	0.4	0.0
			RC ENV~1	Max	115	1.0	0.5	6.1	-1.8	1.4	0.0

					6	1.9	2.5	-5.1	4.7	1.1	0.0
					408	0.7	1.8	7.7	2.5	-1.6	0.0
					407	1.0	2.5	10.9	2.4	0.5	0.0
				Min	115	-0.6	-0.8	0.0	-4.6	-0.5	0.0
					6	-1.4	-4.0	-19.0	-9.9	-5.9	-0.0
					408	-1.2	-1.0	1.6	-1.4	-4.0	0.0
					407	-1.4	-1.5	0.5	-1.8	-0.7	0.0
			RC ENV~2	Max	115	0.3	0.0	4.3	-2.9	0.7	0.0
					6	0.7	-0.5	-10.0	-2.5	-1.6	0.0
					408	-0.1	0.7	5.7	0.5	-2.1	0.0
					407	0.1	0.9	7.7	0.4	0.1	0.0
				Min	115	0.1	-0.3	2.8	-3.4	0.3	0.0
					6	-0.2	-1.4	-13.9	-3.3	-3.9	-0.0
					408	-0.5	0.2	4.5	0.2	-2.9	0.0
					407	-0.5	0.3	5.3	-0.1	-0.3	0.0
358	1	1	SX (RS)		139	0.5	0.2	4.2	0.2	0.2	0.0
					401	0.3	0.4	4.4	0.2	1.1	0.0
					409	0.6	0.3	0.6	0.2	1.4	0.0
					142	0.2	0.5	0.8	0.3	0.4	0.0
			SY (RS)		139	0.2	1.2	1.5	1.3	0.5	0.0
					401	0.7	0.2	0.1	1.1	0.1	0.0
					409	0.2	1.0	1.2	0.9	0.1	0.0
					142	0.6	0.4	0.4	0.8	0.3	0.0
			RC ENV~1	Max	139	0.4	0.6	2.4	0.4	2.4	0.0
					401	0.5	0.2	6.1	0.1	0.2	0.0
					409	0.7	1.5	4.2	1.3	0.7	0.0
					142	0.8	0.8	1.9	1.4	2.8	0.0
				Min	139	-0.6	-1.7	-6.0	-2.2	1.2	0.0
					401	-0.9	-0.7	-2.8	-2.1	-2.1	0.0
					409	-0.5	-0.5	1.8	-0.4	-2.1	0.0
					142	-0.4	-0.2	-0.5	-0.2	1.3	0.0
			RC ENV~2	Max	139	0.1	-0.5	-1.1	-0.7	1.8	0.0
					401	-0.1	-0.1	3.4	-1.0	-0.5	0.0
					409	0.4	0.8	3.1	0.4	-0.1	0.0
					142	0.3	0.6	1.3	0.7	2.1	0.0
				Min	139	-0.3	-0.9	-3.7	-0.9	1.7	0.0
					401	-0.4	-0.5	0.4	-1.2	-1.5	0.0
					409	-0.1	0.4	2.9	-0.0	-1.2	0.0
					142	0.2	0.1	0.2	0.3	1.7	0.0
359	1	1	SX (RS)		401	1.1	0.5	0.6	0.5	1.5	0.0
					402	0.1	0.5	0.9	0.2	1.1	0.0
					410	0.9	0.4	1.2	0.2	1.2	0.0
					409	0.1	0.4	0.5	0.2	1.1	0.0
			SY (RS)		401	0.5	0.9	0.4	1.0	0.3	0.0
					402	0.6	0.3	0.3	0.7	0.2	0.0
					410	0.5	0.7	0.7	0.8	0.1	0.0
					409	0.6	0.2	0.6	0.8	0.2	0.0
			RC ENV~1	Max	401	0.8	0.4	-1.5	0.2	2.1	0.0
					402	0.5	0.5	4.1	-0.1	1.2	0.0
					410	1.1	1.1	3.8	1.1	1.5	0.0
					409	0.8	0.5	1.9	1.3	1.8	0.0
				Min	401	-1.4	-1.3	-5.1	-1.8	-0.8	0.0
					402	-0.7	-0.5	1.3	-1.6	-1.0	0.0
					410	-0.6	-0.3	1.4	-0.5	-0.9	0.0
					409	-0.5	-0.3	-0.1	-0.3	-0.3	0.0
			RC ENV~2	Max	401	0.1	-0.3	-2.1	-0.4	1.1	0.0

					402	0.0	0.2	3.0	-0.9	0.5	0.0
					410	0.7	0.7	2.9	0.3	0.9	0.0
					409	0.3	0.2	1.3	0.6	1.3	0.0
				Min	401	-0.8	-0.8	-3.7	-0.8	0.1	0.0
					402	-0.3	-0.2	2.2	-1.0	-0.2	0.0
					410	-0.1	0.2	2.2	-0.1	0.0	0.0
					409	0.1	-0.0	0.5	0.3	0.4	0.0
360	1	1	SX (RS)		402	0.8	0.2	0.5	0.2	1.2	0.0
					403	0.2	0.4	0.5	0.1	0.9	0.0
					411	0.7	0.2	0.9	0.2	0.9	0.0
					410	0.1	0.4	0.5	0.1	1.1	0.0
			SY (RS)		402	0.3	0.4	0.7	0.7	0.2	0.0
					403	0.5	0.4	0.6	0.6	0.2	0.0
					411	0.3	0.4	0.6	0.7	0.2	0.0
					410	0.5	0.4	0.7	0.7	0.2	0.0
			RC ENV~1	Max	402	0.6	0.2	-0.6	0.1	0.8	0.0
					403	0.5	0.4	3.8	-0.0	1.8	0.0
					411	0.9	0.6	2.9	1.0	2.1	0.0
					410	0.6	0.4	1.2	1.1	0.9	0.0
				Min	402	-0.9	-0.6	-3.3	-1.3	-1.5	0.0
					403	-0.6	-0.4	1.5	-1.3	0.1	0.0
					411	-0.5	-0.2	1.2	-0.4	0.1	0.0
					410	-0.4	-0.4	-0.3	-0.2	-1.3	0.0
			RC ENV~2	Max	402	0.1	-0.2	-1.3	-0.3	-0.0	0.0
					403	0.1	0.1	2.8	-0.6	1.3	0.0
					411	0.5	0.4	2.2	0.3	1.6	0.0
					410	0.2	0.1	0.8	0.5	0.2	0.0
				Min	402	-0.5	-0.4	-2.3	-0.6	-0.9	0.0
					403	-0.2	-0.1	2.1	-0.7	0.7	0.0
					411	-0.1	0.2	1.7	-0.0	0.9	0.0
					410	-0.0	-0.1	0.3	0.3	-0.6	0.0
361	1	1	SX (RS)		403	0.6	0.2	0.4	0.2	0.9	0.0
					404	0.1	0.3	0.4	0.1	0.6	0.0
					412	0.5	0.2	0.7	0.2	0.6	0.0
					411	0.1	0.3	0.5	0.1	0.9	0.0
			SY (RS)		403	0.1	0.3	0.7	0.6	0.3	0.0
					404	0.6	0.4	0.7	0.7	0.2	0.0
					412	0.2	0.3	0.6	0.6	0.3	0.0
					411	0.5	0.3	0.6	0.7	0.2	0.0
			RC ENV~1	Max	403	0.4	0.2	0.7	0.1	-0.1	0.0
					404	0.5	0.4	2.4	0.2	2.4	0.0
					412	0.6	0.5	2.3	1.0	2.4	0.0
					411	0.6	0.4	1.1	1.0	-0.1	0.0
				Min	403	-0.7	-0.5	-1.0	-1.1	-2.1	0.0
					404	-0.6	-0.4	0.6	-1.1	0.8	0.0
					412	-0.4	-0.1	0.9	-0.2	0.7	0.0
					411	-0.5	-0.3	-0.4	-0.3	-1.9	0.0
			RC ENV~2	Max	403	0.1	-0.1	0.0	-0.2	-0.9	0.0
					404	0.1	0.0	1.7	-0.3	1.8	0.0
					412	0.3	0.3	1.7	0.4	1.8	0.0
					411	0.2	0.1	0.8	0.4	-0.8	0.0
				Min	403	-0.4	-0.3	-0.6	-0.5	-1.5	0.0
					404	-0.2	-0.1	1.3	-0.4	1.4	0.0
					412	-0.1	0.1	1.2	0.0	1.3	0.0
					411	-0.1	-0.0	0.3	0.2	-1.4	0.0
362	1	1	SX (RS)		404	0.4	0.2	0.4	0.1	0.6	0.0

					405	0.1	0.3	0.5	0.1	0.4	0.0
					413	0.4	0.2	0.5	0.1	0.4	0.0
					412	0.1	0.3	0.6	0.1	0.6	0.0
				SY (RS)	404	0.1	0.3	0.8	0.5	0.3	0.0
					405	0.6	0.4	0.9	0.8	0.2	0.0
					413	0.1	0.3	0.7	0.6	0.3	0.0
					412	0.6	0.4	0.6	0.7	0.2	0.0
			RC ENV~1	Max	404	0.4	0.2	2.1	0.1	-0.7	0.0
					405	0.6	0.3	0.9	0.5	2.2	0.0
					413	0.4	0.4	2.1	1.0	2.0	0.0
					412	0.6	0.4	1.4	1.0	-0.8	0.0
				Min	404	-0.5	-0.4	0.6	-1.0	-2.4	0.0
					405	-0.6	-0.5	-0.8	-1.0	1.1	0.0
					413	-0.4	-0.1	0.6	-0.2	0.8	0.0
					412	-0.5	-0.3	-0.2	-0.5	-2.3	0.0
			RC ENV~2	Max	404	0.1	-0.1	1.3	-0.2	-1.3	0.0
					405	0.1	-0.0	0.2	-0.1	1.7	0.0
					413	0.2	0.2	1.4	0.4	1.5	0.0
					412	0.1	0.1	1.0	0.2	-1.4	0.0
				Min	404	-0.2	-0.2	1.0	-0.5	-1.7	0.0
					405	-0.1	-0.1	-0.1	-0.3	1.5	0.0
					413	-0.1	0.1	1.0	0.1	1.2	0.0
					412	-0.1	0.0	0.4	-0.0	-1.7	0.0
363	1	1		SX (RS)	405	0.3	0.3	0.4	0.1	0.4	0.0
					406	0.3	0.3	0.7	0.1	0.1	0.0
					414	0.3	0.3	0.3	0.1	0.2	0.0
					413	0.3	0.3	0.7	0.1	0.3	0.0
				SY (RS)	405	0.2	0.3	0.8	0.6	0.4	0.0
					406	0.7	0.5	1.1	0.9	0.2	0.0
					414	0.2	0.3	0.9	0.8	0.4	0.0
					413	0.6	0.4	0.6	0.9	0.2	0.0
			RC ENV~1	Max	405	0.3	0.2	3.1	-0.1	-0.8	0.0
					406	0.7	0.3	-0.6	0.6	1.5	0.0
					414	0.3	0.4	2.5	1.2	1.0	0.0
					413	0.6	0.6	2.1	1.0	-1.1	0.0
				Min	405	-0.3	-0.4	1.6	-1.3	-1.9	0.0
					406	-0.7	-0.6	-2.9	-1.2	0.9	0.0
					414	-0.3	-0.2	0.7	-0.3	0.2	0.0
					413	-0.6	-0.3	0.3	-0.9	-2.2	0.0
			RC ENV~2	Max	405	0.1	-0.1	2.4	-0.4	-1.1	0.0
					406	0.0	-0.1	-1.6	-0.1	1.1	0.0
					414	0.1	0.2	1.6	0.4	0.7	0.0
					413	0.1	0.2	1.5	0.1	-1.5	0.0
				Min	405	-0.1	-0.2	2.1	-0.7	-1.4	0.0
					406	-0.0	-0.2	-2.2	-0.4	1.0	0.0
					414	-0.2	0.1	1.4	0.1	0.6	0.0
					413	-0.0	0.1	0.9	-0.2	-1.7	0.0
364	1	1		SX (RS)	406	0.3	0.3	0.2	0.1	0.2	0.0
					407	0.5	0.5	1.1	0.2	0.4	0.0
					415	0.4	0.3	0.3	0.2	0.2	0.0
					414	0.4	0.4	0.9	0.1	0.1	0.0
				SY (RS)	406	0.3	0.2	0.2	0.9	0.5	0.0
					407	0.9	1.0	0.5	1.4	0.3	0.0
					415	0.4	0.1	0.7	1.1	0.3	0.0
					414	0.8	0.8	1.0	1.1	0.2	0.0

			RC ENV~1	Max	406	0.4	0.2	3.6	-0.1	-0.0	0.0
					407	1.0	0.7	-2.4	1.0	0.6	0.0
					415	0.3	0.4	3.3	1.3	0.0	0.0
					414	0.7	1.0	3.3	0.9	-0.8	0.0
				Min	406	-0.3	-0.4	2.3	-1.9	-1.0	0.0
					407	-0.8	-1.3	-6.0	-1.9	-0.2	0.0
					415	-0.5	-0.1	1.7	-0.8	-0.7	0.0
					414	-0.8	-0.6	0.7	-1.3	-1.5	0.0
			RC ENV~2	Max	406	0.2	-0.0	2.8	-0.8	-0.5	0.0
					407	0.1	-0.2	-3.4	-0.2	0.3	0.0
					415	0.0	0.3	2.5	0.2	-0.2	0.0
					414	-0.0	0.4	2.4	-0.2	-1.0	0.0
				Min	406	-0.0	-0.2	2.5	-1.0	-0.6	0.0
					407	0.0	-0.5	-4.5	-0.5	-0.0	0.0
					415	-0.3	0.1	2.4	-0.2	-0.5	0.0
					414	-0.1	0.1	1.7	-0.6	-1.1	0.0
365	1	1	SX (RS)		407	0.5	0.3	2.4	0.1	0.3	0.0
					408	0.2	0.3	1.8	0.1	0.5	0.0
					416	0.4	0.3	0.6	0.2	0.2	0.0
					415	0.3	0.4	0.5	0.1	0.3	0.0
			SY (RS)		407	0.5	0.5	0.6	1.7	0.5	0.0
					408	0.4	1.3	3.2	1.9	0.5	0.0
					416	0.5	0.7	0.8	1.1	0.4	0.0
					415	0.4	1.1	1.8	1.1	0.3	0.0
			RC ENV~1	Max	407	0.7	0.3	2.8	0.7	1.2	0.0
					408	0.4	0.9	0.7	1.3	-0.2	0.0
					416	0.3	1.0	4.2	1.0	-0.2	0.0
					415	0.4	1.5	4.4	0.8	0.4	0.0
				Min	407	-0.4	-0.8	-2.1	-2.6	0.0	0.0
					408	-0.5	-1.7	-5.6	-2.5	-1.6	0.0
					416	-0.6	-0.4	1.9	-1.3	-1.3	0.0
					415	-0.4	-0.8	0.8	-1.4	-0.4	0.0
			RC ENV~2	Max	407	0.3	-0.2	1.0	-0.7	0.9	0.0
					408	-0.0	-0.3	-2.2	-0.3	-0.6	0.0
					416	-0.0	0.5	3.1	-0.1	-0.5	0.0
					415	0.1	0.6	3.2	-0.3	0.2	0.0
				Min	407	-0.0	-0.4	-0.6	-1.0	0.5	0.0
					408	-0.1	-0.7	-3.5	-0.6	-1.1	0.0
					416	-0.3	0.2	2.7	-0.6	-1.0	0.0
					415	0.0	0.2	2.5	-0.8	-0.1	0.0
366	1	1	SX (RS)		142	0.5	0.1	1.6	0.4	1.0	0.0
					409	0.1	0.3	1.3	0.2	0.8	0.0
					417	0.4	0.2	1.0	0.4	1.1	0.0
					145	0.1	0.4	1.3	0.2	0.6	0.0
			SY (RS)		142	0.2	0.7	0.5	0.9	0.2	0.0
					409	0.5	0.1	0.5	0.9	0.2	0.0
					417	0.2	0.7	0.6	0.6	0.1	0.0
					145	0.4	0.2	0.5	0.6	0.1	0.0
			RC ENV~1	Max	142	0.4	0.3	0.3	0.3	2.6	0.0
					409	0.3	0.1	4.0	0.3	0.1	0.0
					417	0.5	1.1	3.6	0.9	0.5	0.0
					145	0.6	0.6	1.0	1.0	2.6	0.0
				Min	142	-0.5	-1.1	-3.2	-1.4	0.6	0.0
					409	-0.6	-0.6	0.9	-1.4	-1.5	0.0
					417	-0.3	-0.2	1.5	-0.3	-1.7	0.0
					145	-0.3	-0.2	-1.6	-0.2	1.0	0.0

			RC ENV~2	Max	142	0.1	-0.4	-1.2	-0.2	1.9	0.0
					409	-0.1	-0.1	2.9	-0.3	-0.4	0.0
					417	0.2	0.6	2.6	0.3	-0.2	0.0
					145	0.3	0.4	0.3	0.5	2.0	0.0
				Min	142	-0.3	-0.6	-2.3	-0.6	1.2	0.0
					409	-0.3	-0.4	2.1	-0.7	-1.1	0.0
					417	-0.1	0.4	2.2	-0.1	-1.0	0.0
					145	0.1	0.1	-0.3	0.2	1.4	0.0
367	1	1	SX (RS)		409	0.4	0.2	1.0	0.2	1.1	0.0
					410	0.1	0.3	1.1	0.1	1.0	0.0
					418	0.4	0.2	0.9	0.2	1.1	0.0
					417	0.2	0.3	0.9	0.2	0.9	0.0
			SY (RS)		409	0.4	0.7	0.5	0.8	0.2	0.0
					410	0.6	0.3	0.3	0.8	0.1	0.0
					418	0.4	0.6	0.5	0.6	0.1	0.0
					417	0.5	0.2	0.5	0.6	0.2	0.0
			RC ENV~1	Max	409	0.3	0.3	-0.2	0.4	1.7	0.0
					410	0.4	0.2	4.0	0.3	1.2	0.0
					418	0.5	1.0	3.2	0.8	1.4	0.0
					417	0.7	0.4	0.7	0.9	1.5	0.0
				Min	409	-0.6	-1.1	-2.9	-1.2	-0.5	0.0
					410	-0.7	-0.4	1.1	-1.2	-0.8	0.0
					418	-0.3	-0.2	1.3	-0.4	-0.9	0.0
					417	-0.4	-0.2	-1.0	-0.3	-0.2	0.0
			RC ENV~2	Max	409	0.0	-0.3	-1.1	0.0	0.9	0.0
					410	-0.1	-0.1	3.0	-0.3	0.5	0.0
					418	0.3	0.6	2.3	0.2	0.8	0.0
					417	0.3	0.2	0.4	0.4	1.1	0.0
				Min	409	-0.3	-0.6	-2.0	-0.4	0.1	0.0
					410	-0.3	-0.1	2.1	-0.5	-0.2	0.0
					418	-0.0	0.3	1.9	-0.2	-0.0	0.0
					417	0.1	0.1	-0.1	0.1	0.4	0.0
368	1	1	SX (RS)		410	0.5	0.3	0.3	0.2	1.1	0.0
					411	0.1	0.3	0.6	0.1	0.9	0.0
					419	0.5	0.3	0.9	0.2	0.9	0.0
					418	0.2	0.3	0.6	0.1	1.0	0.0
			SY (RS)		410	0.4	0.5	0.5	0.7	0.2	0.0
					411	0.5	0.4	0.4	0.7	0.2	0.0
					419	0.4	0.4	0.4	0.6	0.2	0.0
					418	0.5	0.4	0.5	0.6	0.2	0.0
			RC ENV~1	Max	410	0.4	0.2	-0.2	0.4	0.8	0.0
					411	0.4	0.4	3.4	0.3	1.8	0.0
					419	0.6	0.7	2.8	0.8	2.0	0.0
					418	0.7	0.4	0.8	0.9	0.7	0.0
				Min	410	-0.7	-0.8	-2.0	-1.0	-1.4	0.0
					411	-0.7	-0.4	1.3	-1.1	0.0	0.0
					419	-0.3	-0.2	1.0	-0.3	-0.0	0.0
					418	-0.4	-0.3	-0.6	-0.4	-1.2	0.0
			RC ENV~2	Max	410	0.1	-0.2	-0.6	0.1	-0.0	0.0
					411	-0.0	-0.0	2.5	-0.2	1.2	0.0
					419	0.3	0.5	2.0	0.2	1.4	0.0
					418	0.3	0.1	0.5	0.3	0.1	0.0
				Min	410	-0.4	-0.5	-1.4	-0.3	-0.8	0.0
					411	-0.3	-0.0	1.8	-0.4	0.7	0.0
					419	-0.1	0.2	1.5	-0.2	0.7	0.0
					418	0.0	0.0	0.0	0.0	-0.6	0.0

369	1	1	SX (RS)	411	0.4	0.2	0.2	0.2	0.9	0.0
				412	0.2	0.3	0.4	0.1	0.6	0.0
				420	0.4	0.2	0.8	0.2	0.7	0.0
				419	0.2	0.3	0.6	0.1	0.8	0.0
			SY (RS)	411	0.3	0.3	0.5	0.6	0.2	0.0
				412	0.5	0.4	0.5	0.7	0.2	0.0
				420	0.3	0.3	0.4	0.6	0.2	0.0
				419	0.5	0.4	0.5	0.6	0.2	0.0
			RC ENV~1 Max	411	0.3	0.1	0.7	0.3	-0.0	0.0
				412	0.4	0.4	2.3	0.4	2.1	0.0
				420	0.5	0.5	2.3	0.8	2.3	0.0
				419	0.6	0.4	1.1	0.8	-0.1	0.0
			Min	411	-0.5	-0.6	-0.6	-0.9	-2.0	0.0
				412	-0.6	-0.5	0.7	-1.0	0.7	0.0
				420	-0.3	-0.1	0.8	-0.3	0.6	0.0
				419	-0.4	-0.4	-0.4	-0.4	-1.8	0.0
			RC ENV~2 Max	411	0.1	-0.2	0.2	0.0	-0.8	0.0
				412	0.0	-0.0	1.7	-0.1	1.6	0.0
				420	0.2	0.3	1.7	0.2	1.7	0.0
				419	0.3	0.1	0.8	0.2	-0.7	0.0
			Min	411	-0.3	-0.3	-0.4	-0.3	-1.4	0.0
				412	-0.3	-0.1	1.1	-0.3	1.2	0.0
				420	-0.1	0.2	1.1	-0.1	1.2	0.0
				419	-0.0	0.0	0.2	0.0	-1.3	0.0
370	1	1	SX (RS)	412	0.4	0.2	0.3	0.2	0.6	0.0
				413	0.2	0.3	0.4	0.1	0.4	0.0
				421	0.4	0.2	0.6	0.2	0.4	0.0
				420	0.2	0.3	0.6	0.1	0.6	0.0
			SY (RS)	412	0.2	0.3	0.6	0.6	0.2	0.0
				413	0.6	0.4	0.4	0.8	0.1	0.0
				421	0.3	0.3	0.4	0.6	0.2	0.0
				420	0.5	0.4	0.5	0.6	0.2	0.0
			RC ENV~1 Max	412	0.3	0.1	1.7	0.3	-0.6	0.0
				413	0.5	0.4	0.7	0.6	2.0	0.0
				421	0.4	0.5	1.9	0.8	2.0	0.0
				420	0.6	0.5	1.6	0.7	-0.7	0.0
			Min	412	-0.4	-0.5	0.5	-1.0	-2.2	0.0
				413	-0.6	-0.5	-0.3	-0.9	1.0	0.0
				421	-0.3	-0.1	0.7	-0.4	0.7	0.0
				420	-0.4	-0.4	-0.1	-0.5	-2.1	0.0
			RC ENV~2 Max	412	0.1	-0.2	1.1	0.0	-1.2	0.0
				413	0.0	-0.1	0.5	0.1	1.5	0.0
				421	0.2	0.3	1.4	0.2	1.4	0.0
				420	0.2	0.1	1.1	0.1	-1.2	0.0
			Min	412	-0.2	-0.3	0.7	-0.3	-1.6	0.0
				413	-0.2	-0.1	0.2	-0.1	1.3	0.0
				421	-0.1	0.2	0.8	-0.2	1.1	0.0
				420	-0.0	0.1	0.5	-0.1	-1.6	0.0
371	1	1	SX (RS)	413	0.3	0.2	0.3	0.1	0.4	0.0
				414	0.2	0.3	0.4	0.1	0.2	0.0
				422	0.3	0.2	0.4	0.2	0.3	0.0
				421	0.2	0.3	0.6	0.1	0.4	0.0
			SY (RS)	413	0.3	0.3	0.4	0.7	0.3	0.0
				414	0.6	0.6	0.3	0.9	0.1	0.0
				422	0.3	0.3	0.3	0.7	0.2	0.0
				421	0.6	0.5	0.5	0.7	0.1	0.0

			RC ENV~1	Max	413	0.4	0.1	2.2	0.4	-0.7	0.0
					414	0.6	0.4	-0.4	0.9	1.4	0.0
					422	0.3	0.4	1.7	0.8	1.1	0.0
					421	0.6	0.7	2.2	0.6	-0.9	0.0
				Min	413	-0.3	-0.5	1.3	-1.1	-1.8	0.0
					414	-0.7	-0.7	-1.2	-0.9	0.8	0.0
					422	-0.4	-0.1	0.9	-0.6	0.4	0.0
					421	-0.5	-0.4	0.3	-0.8	-1.9	0.0
			RC ENV~2	Max	413	0.2	-0.1	1.7	0.0	-1.0	0.0
					414	0.0	-0.1	-0.7	0.3	1.0	0.0
					422	0.1	0.3	1.3	0.1	0.8	0.0
					421	0.2	0.3	1.6	-0.1	-1.3	0.0
				Min	413	-0.1	-0.3	1.5	-0.3	-1.3	0.0
					414	-0.1	-0.3	-0.9	-0.0	0.9	0.0
					422	-0.2	0.2	0.8	-0.4	0.7	0.0
					421	-0.0	0.1	0.9	-0.4	-1.4	0.0
372	1	1	SX (RS)		414	0.3	0.2	0.3	0.1	0.3	0.0
					415	0.2	0.3	0.2	0.1	0.1	0.0
					423	0.3	0.2	0.5	0.2	0.2	0.0
					422	0.3	0.3	0.7	0.1	0.2	0.0
			SY (RS)		414	0.4	0.2	0.2	1.0	0.3	0.0
					415	0.5	0.7	0.8	1.0	0.2	0.0
					423	0.4	0.1	0.5	0.8	0.2	0.0
					422	0.5	0.6	0.5	0.7	0.2	0.0
			RC ENV~1	Max	414	0.5	0.0	2.3	0.7	-0.3	0.0
					415	0.5	0.5	-0.5	1.2	0.5	0.0
					423	0.3	0.4	2.0	0.6	0.4	0.0
					422	0.6	0.8	2.7	0.4	-0.7	0.0
				Min	414	-0.3	-0.4	1.4	-1.2	-0.9	0.0
					415	-0.6	-0.9	-2.1	-0.9	0.1	0.0
					423	-0.5	-0.0	0.9	-1.0	-0.0	0.0
					422	-0.5	-0.4	0.6	-1.0	-1.2	0.0
			RC ENV~2	Max	414	0.3	-0.2	1.8	0.2	-0.5	0.0
					415	0.0	-0.2	-1.3	0.5	0.4	0.0
					423	0.0	0.3	1.5	-0.2	0.2	0.0
					422	0.2	0.4	1.9	-0.3	-0.7	0.0
				Min	414	-0.0	-0.3	1.4	-0.3	-0.7	0.0
					415	-0.1	-0.4	-1.5	0.1	0.1	0.0
					423	-0.3	0.2	1.0	-0.7	0.0	0.0
					422	-0.0	0.2	1.3	-0.7	-0.9	0.0
373	1	1	SX (RS)		415	0.3	0.2	0.4	0.2	0.2	0.0
					416	0.3	0.3	0.4	0.1	0.2	0.0
					424	0.3	0.2	0.7	0.1	0.1	0.0
					423	0.3	0.3	0.8	0.1	0.1	0.0
			SY (RS)		415	0.3	0.3	0.5	1.2	0.2	0.0
					416	0.3	0.6	0.9	1.1	0.2	0.0
					424	0.3	0.3	0.8	0.8	0.2	0.0
					423	0.3	0.6	0.7	0.7	0.2	0.0
			RC ENV~1	Max	415	0.4	0.0	1.1	1.1	0.2	0.0
					416	0.2	0.3	0.3	1.2	0.2	0.0
					424	0.2	0.6	2.3	0.3	0.2	0.0
					423	0.4	0.9	3.0	0.3	0.1	0.0
				Min	415	-0.2	-0.5	0.1	-1.2	-0.3	0.0
					416	-0.4	-0.9	-1.5	-1.0	-0.6	0.0
					424	-0.4	-0.1	0.7	-1.4	-0.4	0.0
					423	-0.2	-0.3	0.8	-1.3	-0.5	0.0

			RC ENV~2	Max	415	0.3	-0.2	0.7	0.4	0.2	0.0
					416	-0.1	-0.2	-0.5	0.6	-0.1	0.0
					424	-0.0	0.4	1.6	-0.4	0.1	0.0
					423	0.2	0.5	2.2	-0.5	0.0	0.0
				Min	415	0.0	-0.4	0.2	-0.0	-0.1	0.0
					416	-0.2	-0.5	-0.8	0.1	-0.4	0.0
					424	-0.3	0.2	1.3	-1.0	-0.3	0.0
					423	0.1	0.2	1.6	-0.9	-0.3	0.0
374	1	1	SX (RS)		145	0.2	0.0	1.3	0.4	0.7	0.0
					417	0.2	0.3	1.2	0.2	0.9	0.0
					425	0.2	0.0	1.2	0.4	1.0	0.0
					148	0.2	0.3	1.2	0.3	0.7	0.0
			SY (RS)		145	0.3	0.5	0.5	0.7	0.1	0.0
					417	0.4	0.3	0.5	0.7	0.1	0.0
					425	0.3	0.4	0.4	0.4	0.1	0.0
					148	0.3	0.3	0.6	0.4	0.0	0.0
			RC ENV~1	Max	145	0.2	0.1	0.6	0.3	2.4	0.0
					417	0.2	0.2	4.6	0.3	0.2	0.0
					425	0.4	0.8	3.3	0.8	0.3	0.0
					148	0.5	0.5	0.4	0.9	2.7	0.0
				Min	145	-0.3	-0.8	-2.0	-1.0	0.8	0.0
					417	-0.5	-0.5	1.4	-1.0	-1.5	0.0
					425	-0.3	-0.1	0.9	-0.0	-1.6	0.0
					148	-0.1	-0.2	-2.0	0.0	0.9	0.0
			RC ENV~2	Max	145	0.0	-0.3	-0.6	0.1	1.8	0.0
					417	-0.1	-0.2	3.4	-0.1	-0.3	0.0
					425	0.1	0.6	2.2	0.4	-0.2	0.0
					148	0.4	0.2	-0.4	0.5	2.0	0.0
				Min	145	-0.1	-0.6	-1.4	-0.4	1.2	0.0
					417	-0.3	-0.2	2.5	-0.4	-1.1	0.0
					425	-0.0	0.3	1.3	0.0	-1.0	0.0
					148	0.1	0.2	-0.8	0.3	1.4	0.0
375	1	1	SX (RS)		417	0.2	0.1	0.8	0.3	1.0	0.0
					418	0.2	0.3	0.9	0.1	1.0	0.0
					426	0.2	0.1	1.0	0.3	1.1	0.0
					425	0.3	0.3	0.9	0.2	1.0	0.0
			SY (RS)		417	0.4	0.5	0.5	0.6	0.1	0.0
					418	0.5	0.4	0.3	0.7	0.1	0.0
					426	0.4	0.5	0.3	0.4	0.1	0.0
					425	0.5	0.4	0.7	0.5	0.1	0.0
			RC ENV~1	Max	417	0.3	0.1	0.5	0.3	1.6	0.0
					418	0.3	0.3	4.1	0.4	1.2	0.0
					426	0.5	0.8	3.1	0.7	1.2	0.0
					425	0.7	0.5	0.1	0.8	1.6	0.0
				Min	417	-0.5	-0.9	-1.5	-0.9	-0.4	0.0
					418	-0.7	-0.5	1.3	-0.9	-0.8	0.0
					426	-0.4	-0.1	1.2	-0.1	-0.9	0.0
					425	-0.3	-0.3	-1.7	-0.2	-0.3	0.0
			RC ENV~2	Max	417	0.0	-0.3	-0.3	0.2	1.0	0.0
					418	-0.0	-0.0	3.0	0.0	0.6	0.0
					426	0.1	0.5	2.2	0.3	0.7	0.0
					425	0.5	0.2	-0.5	0.3	1.1	0.0
				Min	417	-0.2	-0.5	-1.0	-0.3	0.2	0.0
					418	-0.4	-0.1	2.2	-0.3	-0.1	0.0
					426	-0.0	0.3	1.7	0.0	-0.1	0.0
					425	0.1	0.1	-0.9	0.1	0.3	0.0

376	1	1	SX (RS)	418	0.3	0.2	0.4	0.2	1.1	0.0
				419	0.3	0.3	0.6	0.1	0.8	0.0
				427	0.3	0.2	0.9	0.2	1.0	0.0
				426	0.3	0.3	0.8	0.1	1.0	0.0
			SY (RS)	418	0.4	0.5	0.5	0.6	0.1	0.0
				419	0.5	0.4	0.3	0.6	0.2	0.0
				427	0.4	0.4	0.3	0.4	0.2	0.0
				426	0.5	0.4	0.6	0.5	0.1	0.0
			RC ENV~1 Max	418	0.3	0.2	0.5	0.3	0.8	0.0
				419	0.3	0.4	3.4	0.4	1.7	0.0
				427	0.5	0.7	2.8	0.7	1.9	0.0
				426	0.7	0.5	0.3	0.7	0.7	0.0
			Min	418	-0.5	-0.8	-0.9	-0.8	-1.3	0.0
				419	-0.7	-0.5	1.1	-0.8	0.1	0.0
				427	-0.4	-0.1	1.0	-0.1	-0.1	0.0
				426	-0.3	-0.4	-1.3	-0.3	-1.3	0.0
			RC ENV~2 Max	418	0.0	-0.3	0.0	0.1	0.1	0.0
				419	-0.0	0.0	2.5	0.0	1.2	0.0
				427	0.2	0.5	2.0	0.3	1.3	0.0
				426	0.5	0.1	-0.0	0.2	0.0	0.0
			Min	418	-0.2	-0.5	-0.6	-0.3	-0.7	0.0
				419	-0.4	-0.1	1.8	-0.2	0.7	0.0
				427	-0.1	0.3	1.5	0.0	0.6	0.0
				426	0.0	0.0	-0.8	0.1	-0.6	0.0
377	1	1	SX (RS)	419	0.3	0.2	0.1	0.2	0.9	0.0
				420	0.3	0.3	0.5	0.0	0.6	0.0
				428	0.3	0.2	0.9	0.2	0.7	0.0
				427	0.3	0.3	0.8	0.1	0.8	0.0
			SY (RS)	419	0.4	0.4	0.5	0.5	0.2	0.0
				420	0.5	0.4	0.3	0.6	0.2	0.0
				428	0.4	0.3	0.3	0.4	0.2	0.0
				427	0.5	0.4	0.5	0.5	0.2	0.0
			RC ENV~1 Max	419	0.3	0.1	0.9	0.3	0.0	0.0
				420	0.3	0.4	2.5	0.5	2.0	0.0
				428	0.4	0.6	2.4	0.7	2.2	0.0
				427	0.7	0.5	0.9	0.7	-0.1	0.0
			Min	419	-0.4	-0.6	-0.2	-0.8	-1.9	0.0
				420	-0.7	-0.5	0.8	-0.8	0.6	0.0
				428	-0.4	-0.1	0.5	-0.2	0.5	0.0
				427	-0.3	-0.4	-0.8	-0.3	-1.8	0.0
			RC ENV~2 Max	419	0.1	-0.2	0.5	0.1	-0.7	0.0
				420	0.0	-0.0	1.8	0.1	1.5	0.0
				428	0.1	0.4	1.6	0.3	1.6	0.0
				427	0.5	0.1	0.6	0.2	-0.7	0.0
			Min	419	-0.2	-0.4	-0.0	-0.2	-1.4	0.0
				420	-0.4	-0.1	1.2	-0.2	1.2	0.0
				428	-0.1	0.2	0.8	-0.1	1.1	0.0
				427	0.0	0.0	-0.2	0.1	-1.2	0.0
378	1	1	SX (RS)	420	0.3	0.1	0.1	0.2	0.7	0.0
				421	0.2	0.3	0.3	0.1	0.4	0.0
				429	0.3	0.1	0.9	0.2	0.5	0.0
				428	0.3	0.3	0.8	0.1	0.6	0.0
			SY (RS)	420	0.4	0.3	0.5	0.6	0.2	0.0
				421	0.5	0.5	0.3	0.6	0.1	0.0
				429	0.4	0.3	0.3	0.5	0.2	0.0
				428	0.5	0.5	0.4	0.5	0.2	0.0

			RC ENV~1	Max	420	0.4	0.1	1.4	0.4	-0.5	0.0
					421	0.4	0.4	1.7	0.6	1.8	0.0
					429	0.4	0.5	1.8	0.6	2.1	0.0
					428	0.6	0.6	1.8	0.6	-0.6	0.0
				Min	420	-0.4	-0.5	0.5	-0.7	-2.2	0.0
					421	-0.6	-0.6	0.3	-0.7	0.8	0.0
					429	-0.4	-0.1	-0.1	-0.4	0.7	0.0
					428	-0.3	-0.4	-0.2	-0.4	-1.9	0.0
			RC ENV~2	Max	420	0.2	-0.2	1.0	0.2	-1.1	0.0
					421	0.0	-0.1	1.2	0.2	1.4	0.0
					429	0.1	0.4	1.0	0.1	1.5	0.0
					428	0.4	0.2	1.3	0.1	-1.2	0.0
				Min	420	-0.1	-0.4	0.6	-0.2	-1.6	0.0
					421	-0.3	-0.2	0.7	-0.1	1.2	0.0
					429	-0.2	0.2	0.1	-0.2	1.2	0.0
					428	-0.0	0.1	0.5	-0.0	-1.5	0.0
379	1	1	SX (RS)		421	0.3	0.1	0.3	0.2	0.5	0.0
					422	0.2	0.3	0.2	0.1	0.3	0.0
					430	0.3	0.1	0.6	0.2	0.4	0.0
					429	0.2	0.3	0.7	0.1	0.4	0.0
			SY (RS)		421	0.4	0.3	0.4	0.6	0.2	0.0
					422	0.5	0.5	0.4	0.6	0.1	0.0
					430	0.4	0.3	0.6	0.5	0.2	0.0
					429	0.5	0.5	0.3	0.4	0.1	0.0
			RC ENV~1	Max	421	0.5	0.1	1.7	0.6	-0.6	0.0
					422	0.4	0.4	1.1	0.7	1.2	0.0
					430	0.4	0.5	1.1	0.4	1.4	0.0
					429	0.6	0.7	2.6	0.5	-0.7	0.0
				Min	421	-0.4	-0.5	0.9	-0.7	-1.9	0.0
					422	-0.6	-0.7	-0.1	-0.6	0.6	0.0
					430	-0.5	-0.1	-1.0	-0.8	0.5	0.0
					429	-0.3	-0.4	0.5	-0.4	-1.6	0.0
			RC ENV~2	Max	421	0.2	-0.2	1.3	0.4	-1.1	0.0
					422	0.0	-0.1	0.7	0.4	0.9	0.0
					430	0.0	0.4	0.5	-0.0	1.0	0.0
					429	0.3	0.3	1.8	0.0	-1.1	0.0
				Min	421	-0.1	-0.4	1.0	-0.1	-1.4	0.0
					422	-0.3	-0.3	0.3	0.1	0.7	0.0
					430	-0.2	0.2	-0.6	-0.5	0.9	0.0
					429	0.0	0.1	1.1	-0.2	-1.2	0.0
380	1	1	SX (RS)		422	0.2	0.1	0.4	0.2	0.4	0.0
					423	0.2	0.3	0.1	0.2	0.2	0.0
					431	0.2	0.1	0.5	0.2	0.4	0.0
					430	0.2	0.3	0.8	0.1	0.3	0.0
			SY (RS)		422	0.4	0.3	0.4	0.8	0.2	0.0
					423	0.4	0.5	0.8	0.7	0.2	0.0
					431	0.4	0.3	1.0	0.5	0.2	0.0
					430	0.4	0.5	0.2	0.4	0.2	0.0
			RC ENV~1	Max	422	0.5	0.0	1.8	1.0	-0.3	0.0
					423	0.3	0.2	1.0	1.0	0.6	0.0
					431	0.3	0.5	1.2	0.2	0.8	0.0
					430	0.5	0.7	2.7	0.2	-0.5	0.0
				Min	422	-0.3	-0.5	0.9	-0.6	-1.2	0.0
					423	-0.5	-0.7	-0.5	-0.4	0.0	0.0
					431	-0.5	-0.0	-1.2	-1.1	0.1	0.0
					430	-0.3	-0.3	0.5	-0.6	-1.0	0.0

			RC ENV~2	Max	422	0.3	-0.2	1.4	0.7	-0.7	0.0
					423	-0.0	-0.2	0.7	0.7	0.4	0.0
					431	-0.0	0.4	0.2	-0.3	0.5	0.0
					430	0.3	0.4	2.0	-0.1	-0.5	0.0
				Min	422	-0.0	-0.4	1.0	0.2	-0.9	0.0
					423	-0.3	-0.4	0.3	0.3	0.1	0.0
					431	-0.3	0.2	-0.7	-0.8	0.3	0.0
					430	0.0	0.2	1.3	-0.4	-0.8	0.0
381	1	1	SX (RS)		423	0.2	0.2	0.4	0.1	0.3	0.0
					424	0.2	0.2	0.3	0.2	0.1	0.0
					432	0.2	0.2	1.0	0.1	0.1	0.0
					431	0.2	0.3	1.2	0.2	0.1	0.0
			SY (RS)		423	0.2	0.1	0.6	0.8	0.2	0.0
					424	0.2	0.3	0.9	0.8	0.2	0.0
					432	0.2	0.1	1.0	0.4	0.2	0.0
					431	0.2	0.3	0.5	0.4	0.2	0.0
			RC ENV~1	Max	423	0.4	-0.1	1.5	1.4	0.0	0.0
					424	0.1	0.0	1.6	1.3	0.3	0.0
					432	0.1	0.6	1.5	0.0	0.4	0.0
					431	0.4	0.6	2.3	0.1	0.2	0.0
				Min	423	-0.1	-0.6	0.3	-0.4	-0.6	0.0
					424	-0.4	-0.6	-0.2	-0.4	-0.4	0.0
					432	-0.5	0.1	-0.6	-1.4	-0.2	0.0
					431	-0.1	-0.0	-0.0	-1.0	-0.5	0.0
			RC ENV~2	Max	423	0.3	-0.2	1.0	0.9	-0.1	0.0
					424	-0.1	-0.2	1.1	0.9	0.1	0.0
					432	-0.0	0.4	0.4	-0.4	0.3	0.0
					431	0.3	0.4	1.5	-0.3	0.1	0.0
				Min	423	0.0	-0.4	0.5	0.4	-0.4	0.0
					424	-0.3	-0.4	0.7	0.4	-0.3	0.0
					432	-0.3	0.2	-0.2	-1.0	-0.1	0.0
					431	0.1	0.2	1.1	-0.7	-0.3	0.0
382	1	1	SX (RS)		148	0.1	0.2	1.0	0.4	0.7	0.0
					425	0.3	0.3	1.0	0.3	1.1	0.0
					433	0.1	0.1	1.3	0.3	1.0	0.0
					151	0.4	0.3	1.2	0.4	1.1	0.0
			SY (RS)		148	0.4	0.3	0.6	0.4	0.1	0.0
					425	0.3	0.6	0.7	0.5	0.1	0.0
					433	0.5	0.3	0.4	0.2	0.1	0.0
					151	0.3	0.7	0.8	0.2	0.2	0.0
			RC ENV~1	Max	148	0.4	-0.0	0.8	0.1	2.7	0.0
					425	0.1	0.5	5.9	0.1	0.3	0.0
					433	0.5	0.8	3.2	1.0	0.1	0.0
					151	0.9	0.8	-0.4	1.2	3.5	0.0
				Min	148	-0.4	-0.9	-1.2	-0.8	1.0	0.0
					425	-0.8	-0.7	2.1	-0.8	-1.8	0.0
					433	-0.5	0.0	0.6	0.3	-1.8	0.0
					151	-0.1	-0.5	-2.8	0.3	0.8	0.0
			RC ENV~2	Max	148	0.0	-0.2	-0.2	0.0	2.0	0.0
					425	0.0	-0.0	4.3	-0.2	-0.4	0.0
					433	0.0	0.6	2.0	0.7	-0.4	0.0
					151	0.7	0.2	-1.5	0.9	2.6	0.0
				Min	148	-0.0	-0.6	-0.7	-0.4	1.4	0.0
					425	-0.6	-0.2	3.0	-0.3	-1.3	0.0
					433	-0.1	0.2	0.9	0.5	-1.3	0.0
					151	-0.0	0.1	-1.6	0.6	1.5	0.0

383	1	1	SX (RS)	425	0.1	0.1	0.7	0.3	1.1	0.0
				426	0.4	0.3	0.8	0.1	1.1	0.0
				434	0.1	0.1	1.0	0.3	1.2	0.0
				433	0.4	0.3	0.8	0.2	1.1	0.0
			SY (RS)	425	0.5	0.4	0.5	0.4	0.1	0.0
				426	0.5	0.6	0.5	0.5	0.2	0.0
				434	0.5	0.4	0.2	0.2	0.2	0.0
				433	0.5	0.7	0.9	0.3	0.1	0.0
			RC ENV~1 Max	425	0.5	0.1	1.0	0.1	1.8	0.0
				426	0.3	0.5	4.7	0.3	1.3	0.0
				434	0.5	0.8	3.3	1.0	1.2	0.0
				433	0.9	0.7	-0.8	0.8	1.8	0.0
			Min	425	-0.5	-0.8	-0.5	-0.7	-0.3	0.0
				426	-0.9	-0.7	1.6	-0.7	-0.8	0.0
				434	-0.5	-0.1	1.2	0.3	-1.1	0.0
				433	-0.2	-0.6	-3.2	0.2	-0.4	0.0
			RC ENV~2 Max	425	0.0	-0.2	0.4	-0.0	1.2	0.0
				426	-0.0	0.0	3.4	0.0	0.6	0.0
				434	0.0	0.6	2.2	0.7	0.6	0.0
				433	0.6	0.2	-1.3	0.5	1.3	0.0
			Min	425	-0.0	-0.6	-0.3	-0.4	0.3	0.0
				426	-0.6	-0.2	2.4	-0.2	-0.1	0.0
				434	-0.0	0.2	1.8	0.4	-0.3	0.0
				433	0.0	-0.0	-2.4	0.5	0.3	0.0
384	1	1	SX (RS)	426	0.2	0.1	0.5	0.3	1.1	0.0
				427	0.4	0.3	0.7	0.1	0.8	0.0
				435	0.2	0.1	0.9	0.3	1.0	0.0
				434	0.5	0.3	1.1	0.2	1.1	0.0
			SY (RS)	426	0.5	0.4	0.4	0.4	0.2	0.0
				427	0.6	0.5	0.4	0.5	0.2	0.0
				435	0.5	0.4	0.3	0.3	0.2	0.0
				434	0.6	0.5	0.7	0.3	0.1	0.0
			RC ENV~1 Max	426	0.4	0.1	0.9	0.0	1.0	0.0
				427	0.3	0.4	3.7	0.3	1.8	0.0
				435	0.4	0.8	3.0	0.9	1.9	0.0
				434	1.1	0.6	-0.1	0.8	0.8	0.0
			Min	426	-0.5	-0.8	-0.3	-0.7	-1.3	0.0
				427	-1.0	-0.5	1.2	-0.7	0.1	0.0
				435	-0.5	-0.1	1.1	0.2	-0.2	0.0
				434	-0.3	-0.4	-2.8	0.1	-1.4	0.0
			RC ENV~2 Max	426	0.1	-0.2	0.5	-0.1	0.2	0.0
				427	0.0	0.0	2.7	-0.0	1.3	0.0
				435	0.1	0.6	2.2	0.6	1.4	0.0
				434	0.8	0.2	-0.5	0.5	0.1	0.0
			Min	426	-0.1	-0.6	-0.1	-0.4	-0.7	0.0
				427	-0.7	-0.2	1.8	-0.2	0.8	0.0
				435	-0.2	0.2	1.6	0.3	0.6	0.0
				434	-0.0	-0.1	-2.0	0.4	-0.7	0.0
385	1	1	SX (RS)	427	0.2	0.1	0.2	0.2	1.0	0.0
				428	0.4	0.2	0.5	0.1	0.6	0.0
				436	0.3	0.1	1.0	0.3	0.7	0.0
				435	0.4	0.2	1.0	0.2	0.8	0.0
			SY (RS)	427	0.4	0.4	0.4	0.4	0.2	0.0
				428	0.5	0.5	0.3	0.5	0.2	0.0
				436	0.4	0.3	0.3	0.3	0.2	0.0

					435	0.4	0.4	0.5	0.4	0.2	0.0
			RC ENV~1	Max	427	0.5	0.1	1.1	0.1	0.1	0.0
					428	0.2	0.4	2.9	0.3	2.0	0.0
					436	0.4	0.7	2.4	0.7	2.4	0.0
					435	0.9	0.5	0.8	0.8	-0.2	0.0
				Min	427	-0.4	-0.7	-0.0	-0.7	-1.9	0.0
					428	-0.8	-0.5	0.9	-0.7	0.7	0.0
					436	-0.5	-0.0	0.3	0.0	0.5	0.0
					435	-0.2	-0.3	-1.3	-0.0	-1.8	0.0
			RC ENV~2	Max	427	0.2	-0.2	0.7	0.0	-0.7	0.0
					428	0.0	-0.1	2.1	-0.1	1.5	0.0
					436	0.1	0.5	1.5	0.4	1.7	0.0
					435	0.6	0.2	0.5	0.4	-0.8	0.0
				Min	427	-0.1	-0.5	0.1	-0.3	-1.4	0.0
					428	-0.6	-0.2	1.4	-0.2	1.2	0.0
					436	-0.2	0.2	0.7	0.1	1.2	0.0
					435	-0.0	0.1	-0.6	0.3	-1.3	0.0
386	1	1	SX (RS)		428	0.2	0.1	0.1	0.2	0.7	0.0
					429	0.3	0.2	0.4	0.1	0.5	0.0
					437	0.3	0.1	1.1	0.2	0.5	0.0
					436	0.4	0.2	0.9	0.2	0.6	0.0
			SY (RS)		428	0.5	0.3	0.4	0.4	0.2	0.0
					429	0.4	0.5	0.3	0.5	0.1	0.0
					437	0.5	0.3	0.3	0.3	0.2	0.0
					436	0.4	0.5	0.4	0.4	0.2	0.0
			RC ENV~1	Max	428	0.5	0.0	1.3	0.3	-0.5	0.0
					429	0.2	0.4	2.5	0.3	1.7	0.0
					437	0.4	0.6	1.6	0.6	2.3	0.0
					436	0.8	0.6	2.1	0.7	-0.6	0.0
				Min	428	-0.4	-0.6	0.4	-0.6	-2.4	0.0
					429	-0.7	-0.6	0.7	-0.6	0.7	0.0
					437	-0.6	-0.0	-1.1	-0.2	0.8	0.0
					436	-0.2	-0.3	-0.2	-0.0	-2.0	0.0
			RC ENV~2	Max	428	0.2	-0.2	0.9	0.2	-1.2	0.0
					429	-0.0	-0.1	1.8	-0.1	1.3	0.0
					437	0.0	0.5	0.6	0.3	1.7	0.0
					436	0.5	0.2	1.4	0.4	-1.2	0.0
				Min	428	-0.1	-0.5	0.4	-0.2	-1.7	0.0
					429	-0.5	-0.2	1.1	-0.2	1.2	0.0
					437	-0.3	0.2	-0.7	-0.1	1.3	0.0
					436	0.0	0.1	0.5	0.2	-1.5	0.0
387	1	1	SX (RS)		429	0.2	0.1	0.4	0.2	0.5	0.0
					430	0.2	0.2	0.4	0.1	0.5	0.0
					438	0.2	0.1	1.2	0.2	0.5	0.0
					437	0.3	0.2	0.7	0.2	0.5	0.0
			SY (RS)		429	0.5	0.3	0.5	0.4	0.2	0.0
					430	0.4	0.5	0.3	0.4	0.1	0.0
					438	0.6	0.4	0.6	0.3	0.2	0.0
					437	0.4	0.5	0.1	0.3	0.2	0.0
			RC ENV~1	Max	429	0.6	0.1	1.6	0.7	-0.7	0.0
					430	0.2	0.3	2.8	0.3	1.2	0.0
					438	0.5	0.6	0.6	0.4	1.7	0.0
					437	0.7	0.7	3.3	0.6	-0.6	0.0
				Min	429	-0.4	-0.6	0.6	-0.4	-2.2	0.0
					430	-0.6	-0.7	0.8	-0.5	0.3	0.0
					438	-0.7	-0.1	-3.2	-0.5	0.5	0.0

					437	-0.2	-0.4	0.7	0.1	-1.6	0.0
			RC ENV~2	Max	429	0.3	-0.2	1.2	0.5	-1.2	0.0
					430	-0.0	-0.2	2.0	0.1	0.8	0.0
					438	-0.0	0.5	-0.5	0.1	1.2	0.0
					437	0.5	0.3	2.4	0.5	-1.1	0.0
				Min	429	-0.0	-0.4	0.7	0.0	-1.6	0.0
					430	-0.4	-0.3	1.2	-0.1	0.6	0.0
					438	-0.3	0.2	-2.2	-0.3	1.0	0.0
					437	0.0	0.2	1.4	0.2	-1.2	0.0
388	1	1	SX (RS)		430	0.2	0.1	0.5	0.2	0.5	0.0
					431	0.2	0.2	0.1	0.2	0.3	0.0
					439	0.2	0.1	0.6	0.2	0.5	0.0
					438	0.2	0.2	1.0	0.0	0.5	0.0
			SY (RS)		430	0.5	0.5	0.7	0.5	0.2	0.0
					431	0.4	0.3	0.7	0.4	0.3	0.0
					439	0.5	0.6	1.5	0.2	0.2	0.0
					438	0.4	0.4	0.1	0.2	0.1	0.0
			RC ENV~1	Max	430	0.6	0.2	2.0	1.2	-0.4	0.0
					431	0.2	0.1	3.4	0.6	0.5	0.0
					439	0.3	0.8	0.1	0.2	1.0	0.0
					438	0.6	0.6	3.4	0.6	-0.1	0.0
				Min	430	-0.4	-0.7	0.6	-0.2	-1.5	0.0
					431	-0.6	-0.6	0.8	-0.2	-0.5	0.0
					439	-0.6	-0.3	-4.5	-0.8	-0.1	0.0
					438	-0.2	-0.2	0.7	0.1	-1.1	0.0
			RC ENV~2	Max	430	0.3	-0.2	1.4	0.8	-0.9	0.0
					431	-0.0	-0.2	2.4	0.4	0.2	0.0
					439	-0.0	0.5	-1.3	-0.0	0.6	0.0
					438	0.4	0.4	2.5	0.4	-0.3	0.0
				Min	430	0.0	-0.4	0.9	0.3	-1.1	0.0
					431	-0.4	-0.4	1.5	0.1	-0.3	0.0
					439	-0.3	0.2	-3.1	-0.5	0.2	0.0
					438	0.0	0.2	1.7	0.1	-0.7	0.0
389	1	1	SX (RS)		431	0.2	0.1	0.8	0.1	0.5	0.0
					432	0.2	0.2	0.6	0.2	0.1	0.0
					440	0.1	0.1	1.1	0.2	0.6	0.0
					439	0.2	0.2	1.3	0.3	0.2	0.0
			SY (RS)		431	0.2	0.5	0.9	0.5	0.2	0.0
					432	0.2	0.2	1.0	0.4	0.4	0.0
					440	0.1	0.5	1.4	0.2	0.4	0.0
					439	0.3	0.2	0.5	0.3	0.4	0.0
			RC ENV~1	Max	431	0.5	0.2	2.3	1.5	0.1	0.0
					432	0.1	-0.0	3.8	1.1	0.4	0.0
					440	-0.0	0.8	0.5	0.1	0.6	0.0
					439	0.5	0.6	2.2	0.4	0.7	0.0
				Min	431	-0.0	-0.7	0.5	-0.0	-0.9	0.0
					432	-0.5	-0.6	0.8	-0.1	-0.9	0.0
					440	-0.5	-0.3	-3.2	-0.8	-0.7	0.0
					439	-0.1	0.0	-0.5	-0.2	-0.5	0.0
			RC ENV~2	Max	431	0.3	-0.2	1.8	1.0	-0.1	0.0
					432	-0.1	-0.2	2.7	0.7	0.0	0.0
					440	-0.1	0.4	-0.9	-0.1	0.2	0.0
					439	0.4	0.4	1.3	0.2	0.5	0.0
				Min	431	0.1	-0.4	1.0	0.5	-0.5	0.0
					432	-0.4	-0.4	1.8	0.3	-0.6	0.0
					440	-0.4	0.2	-2.2	-0.5	-0.4	0.0

				439	0.1	0.2	0.8	-0.1	-0.1	0.0
390	1	1	SX (RS)	151	0.1	0.3	1.6	0.4	0.4	0.0
				433	0.5	0.4	0.7	0.2	1.6	0.0
				441	0.2	0.3	5.2	0.5	1.5	0.0
				154	0.4	0.4	4.0	0.4	0.3	0.0
			SY (RS)	151	0.7	0.4	0.9	0.3	0.4	0.0
				433	0.4	1.1	1.5	0.3	0.2	0.0
				441	0.8	0.3	0.9	0.4	0.3	0.0
				154	0.3	1.3	2.5	0.6	0.6	0.0
			RC ENV~1 Max	151	0.7	0.0	3.6	-0.3	3.0	0.0
				433	0.2	1.0	6.5	-0.2	0.5	0.0
				441	0.8	0.9	5.4	2.8	0.2	0.0
				154	0.9	1.4	2.3	2.5	2.6	0.0
			Min	151	-0.7	-1.0	-0.4	-1.0	1.5	0.0
				433	-1.1	-1.2	2.0	-0.8	-2.7	0.0
				441	-0.7	0.0	-5.1	1.0	-3.2	0.0
				154	-0.2	-1.2	-5.7	0.7	1.1	0.0
			RC ENV~2 Max	151	0.1	-0.1	2.6	-0.4	2.2	0.0
				433	0.1	0.1	4.8	-0.4	-0.4	0.0
				441	0.1	0.6	2.0	2.1	-0.6	0.0
				154	0.6	0.2	-0.5	1.8	1.9	0.0
			Min	151	-0.0	-0.7	0.1	-0.6	1.7	0.0
				433	-0.7	-0.3	3.5	-0.5	-1.9	0.0
				441	-0.1	0.2	-3.3	1.2	-2.3	0.0
				154	-0.0	-0.0	-2.8	1.1	1.6	0.0
391	1	1	SX (RS)	433	0.1	0.2	1.1	0.3	1.4	0.0
				434	0.8	0.4	1.2	0.1	1.2	0.0
				442	0.3	0.3	0.8	0.6	1.3	0.0
				441	1.0	0.5	2.0	0.7	1.6	0.0
			SY (RS)	433	0.6	0.4	0.5	0.2	0.2	0.0
				434	0.7	0.8	0.8	0.3	0.2	0.0
				442	0.6	0.5	0.4	0.1	0.3	0.0
				441	0.8	0.9	1.2	0.3	0.3	0.0
			RC ENV~1 Max	433	0.7	0.0	2.5	-0.4	2.7	0.0
				434	0.4	0.7	6.5	-0.1	1.5	0.0
				442	0.5	1.1	3.9	2.5	1.4	0.0
				441	2.0	0.9	-1.8	2.5	2.7	0.0
			Min	433	-0.6	-0.9	-0.1	-1.0	-0.2	0.0
				434	-1.6	-0.8	1.9	-0.7	-0.9	0.0
				442	-0.7	-0.1	2.0	0.7	-1.3	0.0
				441	-0.5	-0.9	-8.7	0.4	-0.6	0.0
			RC ENV~2 Max	433	0.1	-0.2	1.8	-0.5	1.9	0.0
				434	0.1	0.2	4.7	-0.4	0.7	0.0
				442	0.0	0.8	3.0	1.9	0.7	0.0
				441	1.4	0.3	-2.5	1.8	1.9	0.0
			Min	433	0.0	-0.7	0.1	-0.7	0.5	0.0
				434	-1.2	-0.3	3.0	-0.4	-0.1	0.0
				442	-0.4	0.1	2.5	0.9	-0.4	0.0
				441	-0.2	-0.3	-6.3	0.9	0.4	0.0
392	1	1	SX (RS)	434	0.3	0.2	0.4	0.3	1.3	0.0
				435	0.6	0.2	0.6	0.2	0.8	0.0
				443	0.4	0.2	1.0	0.5	1.0	0.0
				442	0.7	0.2	1.4	0.4	1.1	0.0
			SY (RS)	434	0.5	0.5	0.5	0.3	0.2	0.0
				435	0.5	0.5	0.4	0.4	0.1	0.0

					443	0.5	0.4	0.4	0.3	0.2	0.0
					442	0.5	0.4	0.6	0.3	0.1	0.0
			RC ENV~1	Max	434	0.6	0.1	1.0	-0.3	1.2	0.0
					435	0.3	0.3	4.2	-0.1	1.9	0.0
					443	0.4	0.9	3.4	1.6	2.1	0.0
					442	1.5	0.5	-0.3	1.5	0.8	0.0
				Min	434	-0.4	-1.0	-0.4	-1.0	-1.4	0.0
					435	-1.3	-0.6	1.4	-0.8	0.2	0.0
					443	-0.7	-0.1	1.3	0.4	-0.0	0.0
					442	-0.3	-0.3	-3.9	0.4	-1.5	0.0
			RC ENV~2	Max	434	0.3	-0.2	0.6	-0.4	0.4	0.0
					435	0.1	-0.1	3.1	-0.4	1.4	0.0
					443	0.1	0.7	2.6	1.2	1.5	0.0
					442	1.0	0.2	-0.7	1.1	0.1	0.0
				Min	434	-0.1	-0.7	-0.2	-0.8	-0.7	0.0
					435	-0.9	-0.2	2.0	-0.5	0.9	0.0
					443	-0.4	0.2	1.7	0.5	0.8	0.0
					442	-0.1	0.1	-2.9	0.6	-0.7	0.0
393	1	1	SX (RS)		435	0.3	0.1	0.1	0.3	1.0	0.0
					436	0.5	0.2	0.4	0.2	0.6	0.0
					444	0.3	0.1	1.1	0.4	0.7	0.0
					443	0.5	0.2	1.1	0.3	0.9	0.0
			SY (RS)		435	0.5	0.3	0.4	0.3	0.2	0.0
					436	0.4	0.5	0.4	0.4	0.2	0.0
					444	0.5	0.3	0.5	0.3	0.2	0.0
					443	0.4	0.5	0.5	0.3	0.1	0.0
			RC ENV~1	Max	435	0.6	0.0	1.0	-0.2	0.1	0.0
					436	0.2	0.3	3.2	0.0	2.2	0.0
					444	0.4	0.8	2.4	0.9	2.6	0.0
					443	1.1	0.6	0.9	1.2	-0.2	0.0
				Min	435	-0.4	-0.8	-0.2	-0.8	-2.1	0.0
					436	-1.0	-0.6	1.1	-0.8	0.7	0.0
					444	-0.6	-0.0	0.3	0.2	0.7	0.0
					443	-0.2	-0.3	-1.4	0.2	-1.9	0.0
			RC ENV~2	Max	435	0.4	-0.2	0.6	-0.2	-0.7	0.0
					436	0.0	-0.1	2.3	-0.3	1.6	0.0
					444	0.0	0.6	1.5	0.7	1.9	0.0
					443	0.8	0.2	0.5	0.9	-0.8	0.0
				Min	435	-0.0	-0.6	-0.1	-0.5	-1.5	0.0
					436	-0.7	-0.2	1.5	-0.5	1.3	0.0
					444	-0.4	0.2	0.6	0.2	1.3	0.0
					443	-0.0	0.1	-0.7	0.5	-1.4	0.0
394	1	1	SX (RS)		436	0.3	0.1	0.2	0.2	0.7	0.0
					437	0.4	0.2	0.4	0.2	0.5	0.0
					445	0.3	0.1	1.3	0.3	0.5	0.0
					444	0.5	0.2	1.0	0.3	0.6	0.0
			SY (RS)		436	0.5	0.3	0.5	0.3	0.2	0.0
					437	0.4	0.5	0.4	0.4	0.2	0.0
					445	0.5	0.3	0.4	0.3	0.2	0.0
					444	0.3	0.5	0.4	0.4	0.2	0.0
			RC ENV~1	Max	436	0.6	0.0	1.3	0.1	-0.6	0.0
					437	0.2	0.3	2.8	-0.0	1.8	0.0
					445	0.4	0.7	1.5	0.8	2.5	0.0
					444	0.9	0.6	2.4	1.1	-0.7	0.0
				Min	436	-0.4	-0.7	0.1	-0.7	-2.6	0.0
					437	-0.9	-0.7	0.8	-0.8	0.7	0.0

					445	-0.7	0.0	-1.5	0.0	0.9	0.0
					444	-0.2	-0.3	-0.2	0.2	-2.1	0.0
			RC ENV~2	Max	436	0.4	-0.2	0.8	0.0	-1.3	0.0
					437	-0.0	-0.2	2.0	-0.3	1.3	0.0
					445	-0.0	0.5	0.3	0.5	1.9	0.0
					444	0.6	0.3	1.7	0.8	-1.3	0.0
				Min	436	-0.0	-0.5	0.2	-0.4	-1.9	0.0
					437	-0.6	-0.3	1.3	-0.5	1.3	0.0
					445	-0.4	0.2	-0.9	0.1	1.4	0.0
					444	0.0	0.2	0.7	0.5	-1.6	0.0
395	1	1	SX (RS)		437	0.3	0.1	0.5	0.2	0.5	0.0
					438	0.4	0.1	0.4	0.1	0.7	0.0
					446	0.4	0.1	1.7	0.3	0.6	0.0
					445	0.4	0.1	0.9	0.4	0.5	0.0
			SY (RS)		437	0.6	0.3	0.5	0.3	0.2	0.0
					438	0.3	0.5	0.7	0.2	0.1	0.0
					446	0.6	0.2	0.5	0.2	0.1	0.0
					445	0.3	0.5	0.3	0.3	0.2	0.0
			RC ENV~1	Max	437	0.7	-0.0	1.7	0.4	-0.9	0.0
					438	0.1	0.3	3.2	-0.3	1.5	0.0
					446	0.4	0.7	0.5	0.8	1.9	0.0
					445	0.8	0.7	4.0	1.5	-0.7	0.0
				Min	437	-0.4	-0.7	0.6	-0.4	-2.5	0.0
					438	-0.7	-0.7	0.7	-0.9	0.1	0.0
					446	-0.7	0.0	-4.5	0.0	0.5	0.0
					445	-0.2	-0.3	0.8	0.3	-1.8	0.0
			RC ENV~2	Max	437	0.3	-0.2	1.2	0.2	-1.4	0.0
					438	-0.1	-0.2	2.3	-0.3	0.8	0.0
					446	-0.1	0.5	-1.1	0.6	1.4	0.0
					445	0.5	0.3	2.9	1.1	-1.2	0.0
				Min	437	0.1	-0.5	0.6	-0.2	-1.9	0.0
					438	-0.5	-0.3	1.4	-0.7	0.5	0.0
					446	-0.4	0.2	-3.1	0.1	1.2	0.0
					445	0.1	0.2	1.7	0.6	-1.3	0.0
396	1	1	SX (RS)		438	0.4	0.3	1.4	0.2	0.7	0.0
					439	0.2	0.1	1.3	0.2	0.8	0.0
					447	0.6	0.3	2.5	0.7	1.2	0.0
					446	0.3	0.1	0.7	0.5	0.7	0.0
			SY (RS)		438	0.8	0.7	1.3	0.2	0.2	0.0
					439	0.4	0.3	0.4	0.2	0.3	0.0
					447	0.9	0.9	1.7	0.6	0.5	0.0
					446	0.3	0.5	0.8	0.2	0.3	0.0
			RC ENV~1	Max	438	0.9	0.4	3.2	0.8	-0.5	0.0
					439	0.2	0.1	5.3	-0.1	0.7	0.0
					447	0.8	1.2	-1.0	1.3	1.6	0.0
					446	0.7	0.7	5.4	2.3	0.0	0.0
				Min	438	-0.6	-0.9	0.3	-0.2	-1.9	0.0
					439	-0.7	-0.6	1.1	-0.7	-1.3	0.0
					447	-1.1	-0.6	-9.5	-0.1	-0.8	0.0
					446	-0.1	-0.3	1.8	0.6	-1.5	0.0
			RC ENV~2	Max	438	0.3	-0.2	2.2	0.5	-1.2	0.0
					439	-0.1	-0.2	3.8	-0.2	-0.1	0.0
					447	-0.1	0.5	-3.4	0.8	0.6	0.0
					446	0.5	0.4	3.9	1.7	-0.4	0.0
				Min	438	0.1	-0.5	1.2	0.0	-1.4	0.0
					439	-0.5	-0.4	2.3	-0.5	-0.9	0.0

					447	-0.3	0.2	-6.7	0.2	0.0	0.0
					446	0.1	0.2	2.5	1.0	-0.8	0.0
397	1	1	SX (RS)		439	0.1	0.2	0.2	0.1	1.1	0.0
					440	0.1	0.1	1.9	0.3	0.6	0.0
					448	0.2	0.1	5.0	0.2	1.4	0.0
					447	0.2	0.2	6.7	0.3	1.0	0.0
			SY (RS)		439	0.3	1.1	2.4	0.2	0.1	0.0
					440	0.5	0.6	1.5	0.2	0.9	0.0
					448	0.2	1.3	4.6	1.2	1.0	0.0
					447	0.6	0.4	0.7	1.0	0.1	0.0
			RC ENV~1	Max	439	0.5	0.8	4.9	1.2	0.8	0.0
					440	0.3	0.4	6.9	0.5	0.3	0.0
					448	0.0	1.6	1.8	1.9	0.9	0.0
					447	0.8	0.7	7.5	2.6	1.9	0.0
				Min	439	-0.1	-1.4	-0.0	0.0	-1.4	0.0
					440	-0.7	-0.9	1.2	-0.3	-2.3	0.0
					448	-0.6	-1.0	-9.0	-0.5	-2.3	0.0
					447	-0.3	-0.1	-5.9	0.2	-0.7	0.0
			RC ENV~2	Max	439	0.4	-0.2	3.5	0.8	0.2	0.0
					440	-0.1	-0.3	5.0	0.3	-0.5	0.0
					448	-0.1	0.5	-2.8	0.9	-0.1	0.0
					447	0.5	0.4	2.0	1.9	1.3	0.0
				Min	439	0.1	-0.5	1.9	0.3	-0.4	0.0
					440	-0.5	-0.4	3.1	-0.0	-1.6	0.0
					448	-0.4	0.2	-6.4	0.2	-1.6	0.0
					447	0.1	0.2	0.1	1.1	0.3	0.0
398	1	1	SX (RS)		154	0.2	0.9	2.0	0.4	1.8	0.0
					441	2.0	0.8	6.2	0.8	2.1	0.0
					449	1.3	1.0	3.3	1.0	1.9	0.0
					8	3.0	0.9	7.5	2.0	7.6	0.0
			SY (RS)		154	1.3	0.9	2.4	0.5	0.5	0.0
					441	1.3	2.0	4.3	0.6	0.4	0.0
					449	1.3	0.4	1.9	0.3	0.5	0.0
					8	1.5	3.2	5.3	4.3	1.9	0.0
			RC ENV~1	Max	154	1.4	0.3	3.5	-0.6	7.5	0.0
					441	1.1	2.0	21.2	-0.4	1.0	0.0
					449	0.7	2.1	12.9	6.4	0.8	0.0
					8	5.6	3.1	-5.4	9.1	16.9	0.0
				Min	154	-1.1	-1.9	-1.3	-1.6	1.8	0.0
					441	-3.7	-1.9	2.5	-2.7	-3.1	0.0
					449	-2.4	-0.4	3.0	2.0	-3.1	0.0
					8	-1.7	-3.3	-31.6	-0.5	-1.3	-0.0
			RC ENV~2	Max	154	0.4	0.0	1.5	-1.0	5.4	0.0
					441	0.5	0.6	15.2	-0.9	-0.3	0.0
					449	0.3	1.5	9.4	4.6	-0.3	0.0
					8	3.9	0.5	-8.6	6.5	12.1	-0.0
				Min	154	0.0	-1.4	0.8	-1.1	2.6	0.0
					441	-2.6	-0.4	6.1	-2.0	-2.2	0.0
					449	-1.7	-0.1	4.4	2.3	-2.1	0.0
					8	-0.8	-0.7	-22.7	2.8	3.0	-0.0
399	1	1	SX (RS)		441	0.7	0.5	0.8	0.4	2.0	0.0
					442	1.1	0.2	1.8	0.4	1.2	0.0
					450	0.8	0.4	1.1	1.0	1.2	0.0
					449	1.2	0.3	3.4	1.1	1.9	0.0
			SY (RS)		441	0.6	0.7	3.4	0.1	0.4	0.0

					442	0.6	0.5	0.2	0.3	0.1	0.0
					450	0.7	0.6	0.9	0.7	0.3	0.0
					449	0.6	0.3	3.0	1.1	0.2	0.0
			RC ENV~1	Max	441	1.3	0.3	3.1	-1.0	3.6	0.0
					442	0.5	0.3	8.4	-0.7	1.6	0.0
					450	0.4	1.1	5.9	3.5	1.5	0.0
					449	2.3	0.5	-0.5	4.3	3.2	0.0
				Min	441	-0.4	-1.3	-3.6	-2.6	-0.5	0.0
					442	-2.1	-0.6	2.0	-2.1	-0.7	0.0
					450	-1.5	-0.2	2.5	0.7	-0.9	0.0
					449	-0.6	-0.1	-9.6	0.7	-0.8	0.0
			RC ENV~2	Max	441	0.9	-0.0	-0.2	-1.1	2.6	0.0
					442	0.2	-0.1	6.0	-0.9	0.8	0.0
					450	0.2	0.8	4.4	2.6	0.9	0.0
					449	1.6	0.4	-1.9	3.1	2.3	0.0
				Min	441	-0.1	-0.9	-1.1	-1.9	0.5	0.0
					442	-1.5	-0.3	3.3	-1.5	0.1	0.0
					450	-1.1	0.1	2.7	1.1	0.0	0.0
					449	-0.2	0.1	-6.9	1.4	0.4	0.0
400	1	1	SX (RS)		442	0.5	0.2	0.4	0.6	1.3	0.0
					443	0.7	0.2	0.6	0.4	0.9	0.0
					451	0.6	0.2	0.9	0.6	0.9	0.0
					450	0.7	0.2	1.1	0.6	1.2	0.0
			SY (RS)		442	0.6	0.4	0.4	0.3	0.3	0.0
					443	0.5	0.5	0.5	0.3	0.0	0.0
					451	0.6	0.4	0.6	0.4	0.2	0.0
					450	0.4	0.5	0.6	0.2	0.1	0.0
			RC ENV~1	Max	442	1.0	0.1	0.1	-0.4	1.2	0.0
					443	0.3	0.3	4.8	-0.4	2.0	0.0
					451	0.3	0.8	3.6	1.8	2.3	0.0
					450	1.5	0.7	-0.1	2.3	0.9	0.0
				Min	442	-0.3	-0.9	-1.8	-1.9	-1.5	0.0
					443	-1.4	-0.7	1.6	-1.6	0.3	0.0
					451	-1.1	-0.1	1.4	0.4	0.2	0.0
					450	-0.3	-0.3	-2.6	0.5	-1.5	0.0
			RC ENV~2	Max	442	0.7	-0.2	-0.3	-0.6	0.2	0.0
					443	0.1	-0.2	3.4	-0.6	1.5	0.0
					451	0.1	0.6	2.8	1.4	1.7	0.0
					450	1.1	0.4	-0.3	1.7	0.2	0.0
				Min	442	-0.1	-0.6	-1.2	-1.4	-0.8	0.0
					443	-1.0	-0.3	2.2	-1.2	1.0	0.0
					451	-0.8	0.2	1.7	0.5	1.0	0.0
					450	-0.1	0.1	-1.9	0.8	-0.7	0.0
401	1	1	SX (RS)		443	0.4	0.1	0.2	0.4	1.0	0.0
					444	0.6	0.2	0.4	0.3	0.6	0.0
					452	0.4	0.1	0.9	0.4	0.7	0.0
					451	0.6	0.2	1.0	0.4	0.9	0.0
			SY (RS)		443	0.5	0.4	0.4	0.3	0.2	0.0
					444	0.4	0.5	0.4	0.4	0.1	0.0
					452	0.6	0.4	0.5	0.4	0.2	0.0
					451	0.4	0.5	0.6	0.4	0.0	0.0
			RC ENV~1	Max	443	0.8	0.1	0.6	-0.3	-0.1	0.0
					444	0.2	0.3	3.5	-0.2	2.3	0.0
					452	0.3	0.7	2.3	1.1	2.8	0.0
					451	1.2	0.7	1.2	1.6	-0.2	0.0
				Min	443	-0.3	-0.8	-1.0	-1.1	-2.2	0.0

					444	-1.1	-0.7	1.2	-1.2	0.8	0.0
					452	-0.9	-0.1	0.5	0.2	0.8	0.0
					451	-0.2	-0.3	-1.0	0.3	-2.0	0.0
			RC ENV~2	Max	443	0.6	-0.2	0.2	-0.3	-0.9	0.0
					444	-0.0	-0.2	2.5	-0.5	1.7	0.0
					452	0.0	0.5	1.5	0.9	2.0	0.0
					451	0.8	0.4	0.8	1.2	-0.8	0.0
				Min	443	-0.0	-0.6	-0.6	-0.8	-1.6	0.0
					444	-0.8	-0.3	1.5	-0.9	1.4	0.0
					452	-0.6	0.2	0.6	0.3	1.4	0.0
					451	0.0	0.1	-0.2	0.6	-1.4	0.0
402	1	1	SX (RS)		444	0.4	0.1	0.4	0.3	0.7	0.0
					445	0.5	0.1	0.3	0.3	0.6	0.0
					453	0.4	0.1	1.0	0.4	0.6	0.0
					452	0.5	0.2	0.9	0.4	0.7	0.0
			SY (RS)		444	0.5	0.3	0.4	0.3	0.2	0.0
					445	0.3	0.5	0.7	0.4	0.1	0.0
					453	0.5	0.3	0.8	0.4	0.1	0.0
					452	0.3	0.5	0.5	0.5	0.1	0.0
			RC ENV~1	Max	444	0.7	0.0	1.0	-0.1	-0.8	0.0
					445	0.2	0.3	2.5	-0.2	2.0	0.0
					453	0.3	0.7	1.5	1.0	2.7	0.0
					452	1.0	0.7	2.8	1.4	-0.8	0.0
				Min	444	-0.3	-0.7	-0.3	-0.8	-2.8	0.0
					445	-0.9	-0.7	0.4	-1.3	0.8	0.0
					453	-0.7	0.0	-1.0	0.1	0.9	0.0
					452	-0.2	-0.3	0.1	0.2	-2.3	0.0
			RC ENV~2	Max	444	0.5	-0.2	0.7	-0.2	-1.4	0.0
					445	-0.1	-0.2	1.8	-0.5	1.5	0.0
					453	-0.0	0.5	0.5	0.8	2.0	0.0
					452	0.7	0.4	1.9	1.0	-1.3	0.0
				Min	444	0.0	-0.5	-0.0	-0.6	-2.0	0.0
					445	-0.7	-0.3	1.1	-0.9	1.4	0.0
					453	-0.5	0.2	-0.6	0.2	1.5	0.0
					452	0.1	0.2	0.9	0.6	-1.7	0.0
403	1	1	SX (RS)		445	0.4	0.1	0.7	0.3	0.6	0.0
					446	0.6	0.1	0.4	0.5	0.8	0.0
					454	0.5	0.1	1.2	0.5	0.7	0.0
					453	0.6	0.1	1.0	0.5	0.5	0.0
			SY (RS)		445	0.5	0.3	0.7	0.2	0.2	0.0
					446	0.3	0.4	0.7	0.4	0.3	0.0
					454	0.5	0.3	0.7	0.2	0.2	0.0
					453	0.3	0.5	0.8	0.5	0.2	0.0
			RC ENV~1	Max	445	0.7	0.0	2.0	-0.1	-1.0	0.0
					446	0.3	0.2	1.9	-0.3	1.7	0.0
					454	0.3	0.7	0.5	1.4	2.0	0.0
					453	0.8	0.7	4.4	1.8	-0.9	0.0
				Min	445	-0.3	-0.7	0.5	-0.9	-2.8	0.0
					446	-0.8	-0.6	0.1	-1.7	0.1	0.0
					454	-0.7	-0.1	-3.4	0.3	0.5	0.0
					453	-0.3	-0.2	0.9	0.4	-2.1	0.0
			RC ENV~2	Max	445	0.4	-0.2	1.3	-0.2	-1.5	0.0
					446	-0.1	-0.2	1.4	-0.7	1.0	0.0
					454	-0.1	0.5	-0.7	1.0	1.5	0.0
					453	0.6	0.4	3.1	1.3	-1.4	0.0
				Min	445	0.1	-0.5	0.6	-0.6	-2.0	0.0

					446	-0.6	-0.4	0.8	-1.3	0.7	0.0
					454	-0.5	0.2	-2.3	0.4	1.2	0.0
					453	0.1	0.2	1.8	0.7	-1.6	0.0
404	1	1	SX (RS)		446	0.7	0.1	2.3	0.3	0.6	0.0
					447	0.6	0.3	1.0	0.2	1.6	0.0
					455	0.8	0.2	4.4	1.2	1.5	0.0
					454	0.7	0.2	1.2	1.0	0.7	0.0
			SY (RS)		446	0.7	0.2	0.5	0.5	0.1	0.0
					447	0.2	0.8	6.3	0.4	0.1	0.0
					455	0.5	0.0	5.4	1.9	0.1	0.0
					454	0.3	0.6	1.5	1.1	0.3	0.0
			RC ENV~1	Max	446	0.9	-0.1	4.5	-0.3	-0.7	0.0
					447	0.4	0.6	7.0	-1.0	1.4	0.0
					455	0.6	0.6	2.6	3.3	1.9	0.0
					454	1.0	0.8	6.7	3.1	-0.4	0.0
				Min	446	-0.5	-0.6	-0.1	-1.3	-2.2	0.0
					447	-0.9	-1.0	-5.6	-2.9	-1.7	0.0
					455	-1.0	0.1	-8.1	-0.5	-1.1	0.0
					454	-0.5	-0.3	1.5	0.4	-1.7	0.0
			RC ENV~2	Max	446	0.4	-0.2	3.0	-0.3	-1.3	0.0
					447	-0.2	-0.2	1.4	-1.3	-0.0	0.0
					455	-0.2	0.4	-2.6	2.1	0.7	0.0
					454	0.5	0.4	4.8	2.3	-0.9	0.0
				Min	446	0.2	-0.5	1.5	-1.0	-1.6	0.0
					447	-0.5	-0.4	0.6	-2.1	-1.1	0.0
					455	-0.4	0.2	-5.7	1.0	-0.1	0.0
					454	0.2	0.2	3.0	1.3	-1.1	0.0
405	1	1	SX (RS)		447	1.5	0.7	8.2	0.8	1.7	0.0
					448	0.1	0.5	2.7	0.4	1.4	0.0
					9	2.6	0.8	9.9	2.4	9.1	0.0
					455	1.1	0.7	4.4	1.0	1.5	0.0
			SY (RS)		447	1.3	2.2	7.3	1.3	0.6	0.0
					448	1.2	1.4	4.7	1.2	0.7	0.0
					9	1.5	3.8	9.1	8.2	1.9	0.0
					455	1.0	0.2	2.9	0.8	0.6	0.0
			RC ENV~1	Max	447	1.7	1.8	14.5	0.8	1.1	0.0
					448	0.9	1.1	12.4	0.4	-0.9	0.0
					9	2.4	4.1	-3.8	11.8	6.5	0.0
					455	1.4	0.9	11.4	7.0	1.3	0.0
				Min	447	-1.3	-2.5	-1.9	-1.8	-2.4	0.0
					448	-1.4	-1.7	0.8	-2.0	-6.2	0.0
					9	-2.7	-3.4	-32.7	-4.6	-11.7	-0.0
					455	-0.9	-0.4	0.7	2.2	-1.7	0.0
			RC ENV~2	Max	447	0.5	-0.1	10.2	0.1	-0.2	0.0
					448	-0.1	-0.2	8.9	-0.5	-2.2	0.0
					9	0.1	0.7	-13.5	5.8	-1.4	0.0
					455	0.5	0.5	8.2	5.1	0.5	0.0
				Min	447	0.0	-0.6	5.2	-0.6	-0.9	0.0
					448	-0.5	-0.5	5.4	-1.2	-4.4	0.0
					9	-0.6	0.2	-23.5	3.3	-5.7	-0.0
					455	0.2	0.1	4.9	3.2	-0.4	0.0
406	1	1	SX (RS)		130	0.6	0.2	1.9	0.4	0.5	0.0
					131	0.2	0.4	0.5	0.3	0.1	0.0
					457	0.5	0.2	1.3	0.1	0.1	0.0
					456	0.2	0.4	0.2	0.0	0.5	0.0

			SY (RS)	130	0.8	0.4	5.7	0.8	0.3	0.0
				131	0.4	0.2	0.6	0.3	0.6	0.0
				457	0.8	0.5	0.6	1.3	0.2	0.0
				456	0.4	0.4	5.6	1.0	0.5	0.0
		RC ENV~1	Max	130	0.7	0.3	0.5	-0.7	0.7	0.0
				131	0.4	0.3	5.9	-1.2	1.4	0.0
				457	0.9	0.6	4.7	1.7	1.9	0.0
				456	0.4	0.4	7.4	2.2	1.5	0.0
			Min	130	-0.8	-0.5	-10.9	-2.4	-0.3	0.0
				131	-0.5	-0.4	3.3	-2.2	0.2	0.0
				457	-0.7	-0.4	1.3	-0.9	1.0	0.0
				456	-0.3	-0.4	-3.8	0.1	0.2	0.0
		RC ENV~2	Max	130	0.1	-0.1	-5.0	-1.4	0.5	0.0
				131	0.0	0.0	4.4	-1.5	0.9	0.0
				457	0.2	0.2	3.5	0.4	1.4	0.0
				456	0.1	0.1	2.2	1.2	1.1	0.0
			Min	130	-0.2	-0.2	-7.0	-1.8	-0.0	0.0
				131	-0.1	-0.2	3.9	-1.7	0.8	0.0
				457	-0.1	0.1	2.3	0.2	1.2	0.0
				456	0.0	-0.1	1.8	1.1	0.6	0.0
407	1	1	SX (RS)	131	0.2	0.2	0.6	0.2	0.1	0.0
				132	0.3	0.2	0.5	0.1	0.4	0.0
				458	0.2	0.2	0.7	0.1	0.3	0.0
				457	0.3	0.3	0.5	0.1	0.1	0.0
			SY (RS)	131	0.7	0.5	1.6	1.0	0.2	0.0
				132	0.3	0.2	1.4	0.3	0.4	0.0
				458	0.7	0.4	0.8	0.9	0.3	0.0
				457	0.3	0.1	1.0	0.5	0.6	0.0
		RC ENV~1	Max	131	0.7	0.4	0.2	0.5	-0.9	0.0
				132	0.3	0.2	4.4	-0.4	2.2	0.0
				458	0.7	0.5	1.8	1.2	2.7	0.0
				457	0.3	0.3	1.8	1.4	-0.1	0.0
			Min	131	-0.8	-0.6	-3.0	-1.4	-1.7	0.0
				132	-0.3	-0.3	1.7	-1.0	0.9	0.0
				458	-0.7	-0.3	0.0	-0.6	1.4	0.0
				457	-0.3	-0.2	-0.3	0.3	-1.2	0.0
		RC ENV~2	Max	131	0.0	-0.1	-1.4	-0.3	-1.1	0.0
				132	0.0	-0.0	3.3	-0.6	1.6	0.0
				458	0.1	0.2	1.3	0.3	2.0	0.0
				457	0.0	0.2	1.0	0.8	-0.6	0.0
			Min	131	-0.1	-0.2	-2.1	-0.4	-1.3	0.0
				132	-0.0	-0.1	3.0	-0.7	1.3	0.0
				458	-0.0	0.1	0.6	0.0	1.7	0.0
				457	-0.0	0.0	0.6	0.7	-0.7	0.0
408	1	1	SX (RS)	132	0.1	0.2	0.5	0.1	0.3	0.0
				133	0.4	0.2	0.4	0.1	0.6	0.0
				459	0.1	0.2	0.6	0.1	0.6	0.0
				458	0.4	0.2	0.6	0.1	0.4	0.0
			SY (RS)	132	0.7	0.3	1.5	0.6	0.3	0.0
				133	0.2	0.2	1.0	0.4	0.3	0.0
				459	0.6	0.3	0.7	0.7	0.3	0.0
				458	0.1	0.2	1.1	0.5	0.4	0.0
		RC ENV~1	Max	132	0.6	0.3	1.5	0.4	-1.3	0.0
				133	0.5	0.2	2.9	-0.1	2.6	0.0
				459	0.6	0.3	0.8	1.0	2.8	0.0
				458	0.3	0.3	2.2	1.1	-0.9	0.0

				Min	132	-0.7	-0.3	-1.4	-0.8	-2.6	0.0
					133	-0.4	-0.3	0.9	-0.8	0.8	0.0
					459	-0.6	-0.3	-0.6	-0.4	1.1	0.0
					458	-0.5	-0.2	-0.0	0.1	-2.1	0.0
			RC ENV~2	Max	132	0.0	-0.0	0.1	-0.1	-1.6	0.0
					133	0.2	-0.0	2.0	-0.3	1.9	0.0
					459	0.0	0.1	0.5	0.3	2.1	0.0
					458	0.0	0.1	1.4	0.6	-1.3	0.0
				Min	132	-0.0	-0.1	-0.3	-0.2	-1.9	0.0
					133	-0.0	-0.1	1.8	-0.4	1.4	0.0
					459	-0.0	-0.0	-0.1	0.1	1.6	0.0
					458	-0.2	0.0	0.9	0.3	-1.6	0.0
409	1	1	SX (RS)		133	0.2	0.2	0.4	0.1	0.6	0.0
					134	0.6	0.1	0.4	0.2	0.9	0.0
					460	0.2	0.3	0.6	0.1	0.9	0.0
					459	0.6	0.1	0.7	0.2	0.6	0.0
			SY (RS)		133	0.6	0.3	1.0	0.5	0.3	0.0
					134	0.0	0.3	1.0	0.4	0.3	0.0
					460	0.6	0.3	0.8	0.6	0.3	0.0
					459	0.0	0.2	0.8	0.5	0.3	0.0
			RC ENV~1	Max	133	0.6	0.3	2.4	0.3	-1.1	0.0
					134	0.7	0.1	1.6	-0.0	2.3	0.0
					460	0.5	0.3	0.4	1.1	2.2	0.0
					459	0.4	0.3	2.6	1.1	-0.8	0.0
				Min	133	-0.6	-0.3	0.4	-0.8	-2.8	0.0
					134	-0.5	-0.4	-0.4	-0.9	0.2	0.0
					460	-0.6	-0.3	-1.2	-0.2	0.3	0.0
					459	-0.7	-0.1	0.8	-0.0	-2.6	0.0
			RC ENV~2	Max	133	0.1	0.1	1.5	-0.1	-1.6	0.0
					134	0.3	-0.1	0.6	-0.3	1.7	0.0
					460	0.1	0.0	0.0	0.4	1.6	0.0
					459	0.1	0.2	1.9	0.5	-1.4	0.0
				Min	133	-0.1	-0.0	1.3	-0.3	-2.1	0.0
					134	-0.1	-0.2	0.2	-0.5	1.0	0.0
					460	-0.1	-0.1	-0.6	0.3	1.1	0.0
					459	-0.3	0.1	1.4	0.2	-1.9	0.0
410	1	1	SX (RS)		134	0.4	0.3	0.4	0.2	0.9	0.0
					135	0.8	0.0	0.4	0.3	1.2	0.0
					461	0.4	0.4	0.7	0.2	1.1	0.0
					460	0.8	0.1	0.8	0.2	0.9	0.0
			SY (RS)		134	0.6	0.3	0.9	0.5	0.3	0.0
					135	0.2	0.4	1.0	0.7	0.3	0.0
					461	0.5	0.2	0.8	0.6	0.2	0.0
					460	0.2	0.4	0.8	0.6	0.3	0.0
			RC ENV~1	Max	134	0.6	0.3	4.2	-0.3	-0.4	0.0
					135	1.0	0.2	-1.1	-0.3	1.3	0.0
					461	0.5	0.4	0.6	1.2	1.3	0.0
					460	0.6	0.5	4.1	1.2	-0.3	0.0
				Min	134	-0.6	-0.3	1.9	-1.2	-2.3	0.0
					135	-0.7	-0.6	-3.9	-1.6	-1.1	0.0
					461	-0.6	-0.4	-1.0	0.1	-1.0	0.0
					460	-1.0	-0.2	1.8	-0.1	-2.4	0.0
			RC ENV~2	Max	134	0.2	0.1	3.2	-0.6	-1.1	0.0
					135	0.5	-0.1	-2.1	-0.7	0.7	0.0
					461	0.1	0.1	0.2	0.6	0.6	0.0
					460	0.1	0.2	3.1	0.5	-1.0	0.0

				Min	134	-0.2	-0.1	2.7	-0.7	-1.7	0.0
					135	-0.1	-0.3	-2.9	-1.0	-0.2	0.0
					461	-0.2	-0.1	-0.4	0.5	-0.2	0.0
					460	-0.5	0.1	2.5	0.2	-1.7	0.0
411	1	1	SX (RS)		135	0.7	0.5	0.5	0.4	1.1	0.0
					136	1.3	0.1	1.9	0.7	1.7	0.0
					462	0.6	0.6	0.4	0.2	1.5	0.0
					461	1.2	0.1	1.7	0.2	1.2	0.0
			SY (RS)		135	0.6	0.3	0.5	0.3	0.2	0.0
					136	0.3	0.4	3.1	0.2	0.2	0.0
					462	0.5	0.4	3.1	0.8	0.2	0.0
					461	0.3	0.5	0.5	0.9	0.2	0.0
			RC ENV~1	Max	135	0.7	0.6	2.7	-1.1	0.9	0.0
					136	1.6	0.2	0.3	-1.0	0.9	0.0
					462	0.6	0.6	3.9	1.7	0.6	0.0
					461	1.0	0.7	6.1	1.6	0.9	0.0
				Min	135	-0.7	-0.5	0.9	-2.2	-1.3	0.0
					136	-1.1	-0.6	-6.3	-2.7	-2.5	0.0
					462	-0.6	-0.7	-2.3	0.1	-2.3	0.0
					461	-1.5	-0.3	2.1	-0.2	-1.5	0.0
			RC ENV~2	Max	135	0.3	0.3	2.0	-1.3	0.1	0.0
					136	0.8	-0.1	-2.3	-1.5	-0.2	0.0
					462	0.2	0.1	1.3	1.0	-0.4	0.0
					461	0.2	0.3	4.6	0.7	0.0	0.0
				Min	135	-0.3	-0.1	1.4	-1.7	-0.6	0.0
					136	-0.2	-0.3	-4.5	-2.0	-1.4	0.0
					462	-0.2	-0.3	0.6	0.9	-1.4	0.0
					461	-0.8	0.2	3.4	0.4	-0.8	0.0
412	1	1	SX (RS)		136	1.2	1.1	1.5	0.2	1.5	0.0
					7	3.2	0.8	3.1	0.9	5.6	0.0
					193	0.1	1.1	2.7	0.5	1.0	0.0
					462	2.1	0.7	4.2	0.5	1.8	0.0
			SY (RS)		136	1.0	0.2	1.8	0.8	0.4	0.0
					7	0.8	2.6	2.6	4.1	0.8	0.0
					193	1.0	0.9	1.4	1.2	0.1	0.0
					462	0.8	1.6	3.0	1.4	0.4	0.0
			RC ENV~1	Max	136	1.3	1.1	5.6	-1.3	2.3	0.0
					7	3.8	1.4	-1.9	2.5	3.3	0.0
					193	0.7	1.5	4.1	2.0	-1.2	0.0
					462	1.6	2.4	9.0	2.1	2.4	0.0
				Min	136	-1.1	-1.1	0.8	-3.5	-0.7	0.0
					7	-2.5	-3.7	-12.6	-5.8	-7.8	-0.0
					193	-1.3	-0.7	-1.4	-0.3	-4.2	0.0
					462	-2.6	-0.9	0.1	-0.6	-1.2	0.0
			RC ENV~2	Max	136	0.6	0.4	4.1	-2.1	1.3	0.0
					7	2.0	-0.8	-4.8	-1.5	-0.6	0.0
					193	-0.2	0.9	2.9	1.0	-2.0	0.0
					462	0.3	1.2	6.5	0.8	1.2	0.0
				Min	136	-0.4	-0.4	2.2	-2.6	0.3	0.0
					7	-0.6	-1.8	-9.0	-2.4	-4.5	0.0
					193	-0.4	-0.1	1.0	0.6	-3.1	0.0
					462	-1.4	0.4	3.4	0.3	-0.1	0.0
413	1	1	SX (RS)		408	0.2	0.3	1.8	0.1	0.5	0.0
					456	0.5	0.3	2.4	0.1	0.3	0.0
					463	0.3	0.4	0.5	0.1	0.3	0.0
					416	0.4	0.3	0.6	0.2	0.2	0.0

			SY (RS)	408	0.4	1.3	3.2	1.9	0.5	0.0
				456	0.5	0.5	0.6	1.7	0.5	0.0
				463	0.4	1.1	1.8	1.1	0.3	0.0
				416	0.5	0.7	0.8	1.1	0.4	0.0
		RC ENV~1	Max	408	0.5	0.9	0.4	1.4	1.4	0.0
				456	0.4	0.3	3.0	0.7	-0.1	0.0
				463	0.4	1.4	4.1	0.7	0.4	0.0
				416	0.6	1.0	4.9	1.0	1.5	0.0
			Min	408	-0.4	-1.7	-5.9	-2.5	0.1	0.0
				456	-0.7	-0.8	-1.8	-2.7	-1.4	0.0
				463	-0.5	-0.8	0.6	-1.5	-0.3	0.0
				416	-0.3	-0.4	2.2	-1.2	0.2	0.0
		RC ENV~2	Max	408	0.1	-0.3	-2.6	-0.2	1.0	0.0
				456	-0.1	-0.2	1.4	-0.8	-0.5	0.0
				463	0.0	0.6	2.7	-0.4	0.3	0.0
				416	0.2	0.5	3.7	-0.1	1.0	0.0
			Min	408	-0.0	-0.6	-4.1	-0.5	0.5	0.0
				456	-0.3	-0.4	-0.2	-1.0	-1.0	0.0
				463	-0.1	0.3	2.3	-0.9	-0.2	0.0
				416	0.1	0.2	2.9	-0.6	0.6	0.0
414	1	1	SX (RS)	456	0.5	0.5	1.1	0.2	0.4	0.0
				457	0.3	0.3	0.2	0.1	0.2	0.0
				464	0.4	0.4	0.9	0.1	0.1	0.0
				463	0.4	0.3	0.3	0.2	0.2	0.0
			SY (RS)	456	0.9	1.0	0.5	1.4	0.3	0.0
				457	0.3	0.2	0.2	0.9	0.5	0.0
				464	0.8	0.8	1.0	1.1	0.2	0.0
				463	0.4	0.1	0.7	1.1	0.3	0.0
		RC ENV~1	Max	456	0.8	0.7	-2.7	1.1	0.1	0.0
				457	0.3	0.2	4.2	-0.1	1.0	0.0
				464	0.8	1.0	2.8	0.9	1.7	0.0
				463	0.5	0.4	4.1	1.3	0.9	0.0
			Min	456	-1.0	-1.3	-6.8	-1.8	-0.6	0.0
				457	-0.4	-0.4	2.5	-1.9	-0.0	0.0
				464	-0.7	-0.6	0.6	-1.4	0.9	0.0
				463	-0.3	-0.1	1.9	-0.8	0.0	0.0
		RC ENV~2	Max	456	0.1	-0.2	-3.7	-0.1	-0.0	0.0
				457	-0.0	-0.0	3.2	-0.8	0.5	0.0
				464	0.1	0.4	2.1	-0.3	1.3	0.0
				463	0.2	0.3	3.0	0.3	0.6	0.0
			Min	456	-0.2	-0.5	-5.0	-0.4	-0.4	0.0
				457	-0.1	-0.2	2.8	-1.0	0.4	0.0
				464	-0.1	0.1	1.3	-0.7	1.1	0.0
				463	0.0	0.1	2.6	-0.2	0.3	0.0
415	1	1	SX (RS)	457	0.3	0.3	0.7	0.1	0.1	0.0
				458	0.3	0.3	0.4	0.1	0.4	0.0
				465	0.3	0.3	0.7	0.1	0.3	0.0
				464	0.3	0.3	0.3	0.1	0.2	0.0
			SY (RS)	457	0.7	0.5	1.1	0.9	0.2	0.0
				458	0.2	0.3	0.8	0.6	0.4	0.0
				465	0.6	0.4	0.6	0.9	0.2	0.0
				464	0.2	0.3	0.9	0.8	0.4	0.0
		RC ENV~1	Max	457	0.7	0.3	-0.8	0.7	-0.9	0.0
				458	0.3	0.2	3.6	-0.1	1.8	0.0
				465	0.6	0.6	1.8	0.9	2.4	0.0
				464	0.3	0.4	2.9	1.2	-0.2	0.0

				Min	457	-0.7	-0.6	-3.7	-1.2	-1.7	0.0
					458	-0.3	-0.4	1.8	-1.3	0.7	0.0
					465	-0.6	-0.3	0.1	-1.0	1.2	0.0
					464	-0.3	-0.2	0.9	-0.3	-0.9	0.0
			RC ENV~2	Max	457	0.1	-0.1	-1.9	0.0	-1.1	0.0
					458	0.1	-0.1	2.8	-0.5	1.4	0.0
					465	0.0	0.2	1.3	-0.0	1.8	0.0
					464	0.1	0.2	2.1	0.4	-0.5	0.0
				Min	457	-0.0	-0.2	-2.7	-0.2	-1.3	0.0
					458	-0.0	-0.2	2.5	-0.7	1.1	0.0
					465	-0.1	0.1	0.6	-0.4	1.5	0.0
					464	-0.0	0.1	1.8	0.1	-0.6	0.0
416	1	1	SX (RS)		458	0.1	0.3	0.5	0.1	0.4	0.0
					459	0.4	0.2	0.4	0.1	0.6	0.0
					466	0.1	0.3	0.6	0.1	0.6	0.0
					465	0.4	0.2	0.5	0.1	0.4	0.0
			SY (RS)		458	0.6	0.4	0.9	0.8	0.2	0.0
					459	0.1	0.3	0.8	0.5	0.3	0.0
					466	0.6	0.4	0.6	0.7	0.2	0.0
					465	0.1	0.3	0.7	0.6	0.3	0.0
			RC ENV~1	Max	458	0.6	0.3	0.6	0.6	-1.2	0.0
					459	0.5	0.2	2.3	0.1	2.3	0.0
					466	0.5	0.4	1.1	0.8	2.5	0.0
					465	0.4	0.4	2.6	1.0	-0.8	0.0
				Min	458	-0.6	-0.5	-1.1	-1.0	-2.4	0.0
					459	-0.4	-0.4	0.7	-1.0	0.7	0.0
					466	-0.6	-0.3	-0.3	-0.6	0.9	0.0
					465	-0.4	-0.1	0.9	-0.2	-1.9	0.0
			RC ENV~2	Max	458	0.1	-0.0	-0.2	0.1	-1.5	0.0
					459	0.2	-0.1	1.6	-0.2	1.7	0.0
					466	-0.0	0.1	0.8	0.1	1.9	0.0
					465	0.0	0.2	1.9	0.4	-1.1	0.0
				Min	458	0.0	-0.1	-0.6	-0.2	-1.8	0.0
					459	-0.0	-0.2	1.4	-0.5	1.2	0.0
					466	-0.1	0.0	0.2	-0.2	1.5	0.0
					465	-0.1	0.1	1.4	0.0	-1.4	0.0
417	1	1	SX (RS)		459	0.1	0.3	0.4	0.1	0.6	0.0
					460	0.6	0.2	0.4	0.2	0.9	0.0
					467	0.1	0.3	0.5	0.1	0.9	0.0
					466	0.5	0.2	0.7	0.2	0.6	0.0
			SY (RS)		459	0.6	0.4	0.7	0.7	0.2	0.0
					460	0.1	0.3	0.7	0.6	0.3	0.0
					467	0.5	0.3	0.6	0.7	0.2	0.0
					466	0.2	0.3	0.6	0.6	0.3	0.0
			RC ENV~1	Max	459	0.6	0.4	1.8	0.3	-0.9	0.0
					460	0.7	0.2	0.8	0.2	2.1	0.0
					467	0.5	0.4	0.9	0.9	2.0	0.0
					466	0.4	0.5	2.9	0.9	-0.7	0.0
				Min	459	-0.5	-0.4	0.3	-1.0	-2.5	0.0
					460	-0.4	-0.5	-0.6	-1.0	0.1	0.0
					467	-0.6	-0.3	-0.5	-0.4	0.2	0.0
					466	-0.6	-0.1	1.1	-0.3	-2.4	0.0
			RC ENV~2	Max	459	0.1	0.0	1.2	-0.1	-1.5	0.0
					460	0.3	-0.1	0.2	-0.1	1.5	0.0
					467	-0.0	0.1	0.6	0.2	1.4	0.0
					466	0.0	0.3	2.1	0.3	-1.2	0.0

				Min	459	-0.0	-0.1	0.9	-0.3	-1.9	0.0
					460	-0.0	-0.3	-0.3	-0.4	0.9	0.0
					467	-0.1	-0.1	0.0	-0.1	0.9	0.0
					466	-0.3	0.1	1.6	-0.1	-1.7	0.0
418	1	1	SX (RS)		460	0.2	0.4	0.5	0.1	0.9	0.0
					461	0.8	0.2	0.5	0.2	1.2	0.0
					468	0.1	0.4	0.5	0.1	1.1	0.0
					467	0.7	0.2	0.9	0.2	0.9	0.0
			SY (RS)		460	0.5	0.4	0.6	0.6	0.2	0.0
					461	0.3	0.4	0.7	0.7	0.2	0.0
					468	0.5	0.4	0.7	0.7	0.2	0.0
					467	0.3	0.4	0.6	0.7	0.2	0.0
			RC ENV~1	Max	460	0.6	0.4	3.0	0.1	-0.2	0.0
					461	1.0	0.2	-0.5	0.2	1.5	0.0
					468	0.4	0.4	1.0	1.0	1.3	0.0
					467	0.5	0.6	3.6	0.9	-0.1	0.0
				Min	460	-0.5	-0.4	1.3	-1.2	-1.9	0.0
					461	-0.6	-0.6	-2.8	-1.2	-0.8	0.0
					468	-0.6	-0.4	-0.4	-0.4	-0.8	0.0
					467	-0.9	-0.2	1.4	-0.4	-2.1	0.0
			RC ENV~2	Max	460	0.2	0.1	2.3	-0.4	-0.9	0.0
					461	0.5	-0.1	-1.2	-0.2	0.8	0.0
					468	-0.0	0.1	0.7	0.3	0.6	0.0
					467	0.1	0.3	2.7	0.3	-0.8	0.0
				Min	460	-0.0	-0.1	1.9	-0.5	-1.4	0.0
					461	-0.1	-0.3	-2.0	-0.5	0.0	0.0
					468	-0.2	-0.1	0.2	0.0	-0.0	0.0
					467	-0.4	0.1	2.0	-0.2	-1.5	0.0
419	1	1	SX (RS)		461	0.1	0.5	0.9	0.2	1.1	0.0
					462	1.1	0.5	0.6	0.5	1.5	0.0
					469	0.1	0.4	0.5	0.2	1.1	0.0
					468	0.9	0.4	1.2	0.2	1.2	0.0
			SY (RS)		461	0.6	0.3	0.3	0.7	0.2	0.0
					462	0.5	0.9	0.4	1.0	0.3	0.0
					469	0.6	0.2	0.6	0.8	0.2	0.0
					468	0.5	0.7	0.7	0.8	0.1	0.0
			RC ENV~1	Max	461	0.7	0.5	3.7	-0.0	0.9	0.0
					462	1.4	0.4	-1.4	0.3	0.8	0.0
					469	0.5	0.5	1.6	1.2	0.3	0.0
					468	0.6	1.1	4.5	1.0	0.9	0.0
				Min	461	-0.5	-0.5	1.1	-1.5	-1.3	0.0
					462	-0.8	-1.3	-4.8	-1.7	-2.1	0.0
					469	-0.8	-0.3	-0.1	-0.4	-1.8	0.0
					468	-1.1	-0.3	1.6	-0.6	-1.5	0.0
			RC ENV~2	Max	461	0.2	0.2	2.7	-0.7	0.1	0.0
					462	0.7	-0.2	-2.0	-0.3	-0.1	0.0
					469	-0.1	0.2	1.1	0.4	-0.4	0.0
					468	0.1	0.6	3.4	0.2	-0.0	0.0
				Min	461	0.0	-0.1	1.9	-0.8	-0.6	0.0
					462	-0.1	-0.7	-3.4	-0.8	-1.1	0.0
					469	-0.2	-0.1	0.4	0.0	-1.2	0.0
					468	-0.6	0.2	2.5	-0.2	-0.9	0.0
420	1	1	SX (RS)		462	0.3	0.4	4.4	0.2	1.1	0.0
					193	0.5	0.2	4.2	0.2	0.2	0.0
					196	0.2	0.5	0.8	0.3	0.4	0.0
					469	0.6	0.3	0.6	0.2	1.4	0.0

			SY (RS)	462	0.7	0.2	0.1	1.1	0.1	0.0
				193	0.2	1.2	1.5	1.3	0.5	0.0
				196	0.6	0.4	0.4	0.8	0.3	0.0
				469	0.2	1.0	1.2	0.9	0.1	0.0
		RC ENV~1	Max	462	0.9	0.2	5.9	0.2	2.0	0.0
				193	0.6	0.6	2.4	0.4	-1.2	0.0
				196	0.4	0.8	1.7	1.2	-1.3	0.0
				469	0.5	1.5	4.8	1.2	2.1	0.0
			Min	462	-0.5	-0.6	-2.9	-2.0	-0.3	0.0
				193	-0.4	-1.7	-6.0	-2.2	-2.5	0.0
				196	-0.8	-0.2	-0.5	-0.4	-2.6	0.0
				469	-0.7	-0.5	2.0	-0.5	-0.7	0.0
		RC ENV~2	Max	462	0.4	-0.0	3.1	-0.9	1.4	0.0
				193	0.3	-0.4	-1.0	-0.6	-1.7	0.0
				196	-0.1	0.5	1.1	0.5	-1.7	0.0
				469	0.1	0.8	3.6	0.3	1.2	0.0
			Min	462	0.1	-0.4	0.0	-1.0	0.5	0.0
				193	-0.1	-0.8	-4.0	-0.9	-1.9	0.0
				196	-0.3	0.1	0.2	0.1	-2.0	0.0
				469	-0.3	0.4	3.2	-0.2	0.2	0.0
421	1	1	SX (RS)	416	0.3	0.3	0.4	0.1	0.2	0.0
				463	0.3	0.2	0.4	0.2	0.2	0.0
				470	0.3	0.3	0.8	0.1	0.1	0.0
				424	0.3	0.2	0.7	0.1	0.1	0.0
			SY (RS)	416	0.3	0.6	0.9	1.1	0.2	0.0
				463	0.3	0.3	0.5	1.2	0.2	0.0
				470	0.3	0.6	0.7	0.7	0.2	0.0
				424	0.2	0.3	0.8	0.8	0.2	0.0
		RC ENV~1	Max	416	0.4	0.3	0.0	1.3	0.5	0.0
				463	0.2	0.0	1.6	1.1	0.2	0.0
				470	0.2	0.9	2.2	0.2	0.6	0.0
				424	0.4	0.6	3.0	0.4	0.6	0.0
			Min	416	-0.2	-0.9	-2.2	-0.9	-0.2	0.0
				463	-0.4	-0.6	0.4	-1.2	-0.4	0.0
				470	-0.4	-0.3	0.6	-1.5	0.1	0.0
				424	-0.2	-0.1	1.0	-1.3	-0.1	0.0
		RC ENV~2	Max	416	0.2	-0.2	-0.9	0.7	0.3	0.0
				463	-0.1	-0.2	1.2	0.4	0.0	0.0
				470	-0.0	0.4	1.6	-0.5	0.5	0.0
				424	0.2	0.4	2.2	-0.4	0.4	0.0
			Min	416	0.0	-0.5	-1.5	0.2	-0.1	0.0
				463	-0.2	-0.4	0.8	-0.1	-0.2	0.0
				470	-0.2	0.2	1.3	-1.1	0.1	0.0
				424	0.1	0.2	1.7	-0.9	0.1	0.0
422	1	1	SX (RS)	463	0.2	0.3	0.2	0.1	0.1	0.0
				464	0.3	0.2	0.3	0.1	0.3	0.0
				471	0.3	0.3	0.7	0.1	0.2	0.0
				470	0.3	0.2	0.5	0.2	0.2	0.0
			SY (RS)	463	0.5	0.7	0.8	1.0	0.2	0.0
				464	0.4	0.2	0.2	1.0	0.3	0.0
				471	0.5	0.6	0.5	0.7	0.2	0.0
				470	0.4	0.1	0.5	0.8	0.2	0.0
		RC ENV~1	Max	463	0.6	0.5	-0.8	1.2	-0.2	0.0
				464	0.3	0.0	3.1	0.7	0.8	0.0
				471	0.4	0.8	2.0	0.3	1.5	0.0

					470	0.5	0.5	2.8	0.6	0.2	0.0
				Min	463	-0.5	-0.9	-3.1	-0.8	-0.7	0.0
					464	-0.5	-0.4	1.7	-1.3	0.2	0.0
					471	-0.6	-0.4	0.4	-1.4	0.7	0.0
					470	-0.3	0.0	1.1	-1.0	-0.4	0.0
			RC ENV~2	Max	463	0.1	-0.2	-1.6	0.7	-0.2	0.0
					464	-0.1	-0.1	2.3	0.2	0.5	0.0
					471	-0.0	0.4	1.5	-0.4	1.1	0.0
					470	0.2	0.4	2.1	-0.1	0.1	0.0
				Min	463	0.0	-0.4	-2.3	0.2	-0.5	0.0
					464	-0.2	-0.3	2.0	-0.3	0.4	0.0
					471	-0.2	0.2	1.0	-0.9	0.9	0.0
					470	0.1	0.2	1.5	-0.7	-0.1	0.0
423	1	1	SX (RS)		464	0.2	0.3	0.4	0.1	0.2	0.0
					465	0.3	0.2	0.3	0.1	0.4	0.0
					472	0.2	0.3	0.6	0.1	0.4	0.0
					471	0.3	0.2	0.4	0.2	0.3	0.0
			SY (RS)		464	0.6	0.6	0.3	0.9	0.1	0.0
					465	0.3	0.3	0.4	0.7	0.3	0.0
					472	0.6	0.5	0.5	0.7	0.1	0.0
					471	0.3	0.3	0.3	0.7	0.2	0.0
			RC ENV~1	Max	464	0.7	0.4	-0.7	1.0	-0.9	0.0
					465	0.3	0.1	2.8	0.4	1.6	0.0
					472	0.5	0.7	1.7	0.5	2.1	0.0
					471	0.4	0.4	2.6	0.7	-0.4	0.0
				Min	464	-0.6	-0.7	-2.2	-0.8	-1.6	0.0
					465	-0.3	-0.5	1.5	-1.1	0.6	0.0
					472	-0.6	-0.4	0.1	-1.0	1.0	0.0
					471	-0.3	-0.1	1.2	-0.7	-0.9	0.0
			RC ENV~2	Max	464	0.1	-0.1	-1.1	0.5	-1.0	0.0
					465	0.0	-0.1	2.1	0.1	1.2	0.0
					472	-0.0	0.2	1.2	-0.2	1.6	0.0
					471	0.1	0.3	1.9	0.1	-0.6	0.0
				Min	464	0.0	-0.3	-1.6	0.1	-1.2	0.0
					465	-0.1	-0.3	2.0	-0.3	1.0	0.0
					472	-0.2	0.1	0.6	-0.7	1.3	0.0
					471	-0.0	0.1	1.2	-0.4	-0.7	0.0
424	1	1	SX (RS)		465	0.2	0.3	0.4	0.1	0.4	0.0
					466	0.4	0.2	0.3	0.2	0.6	0.0
					473	0.2	0.3	0.6	0.1	0.6	0.0
					472	0.4	0.2	0.6	0.2	0.4	0.0
			SY (RS)		465	0.6	0.4	0.4	0.8	0.1	0.0
					466	0.2	0.3	0.6	0.6	0.2	0.0
					473	0.5	0.4	0.5	0.6	0.2	0.0
					472	0.3	0.3	0.4	0.6	0.2	0.0
			RC ENV~1	Max	465	0.6	0.4	0.3	0.7	-1.0	0.0
					466	0.4	0.1	1.9	0.3	2.1	0.0
					473	0.4	0.5	1.2	0.6	2.3	0.0
					472	0.3	0.5	2.6	0.7	-0.7	0.0
				Min	465	-0.5	-0.5	-0.6	-0.8	-2.2	0.0
					466	-0.3	-0.5	0.7	-0.9	0.5	0.0
					473	-0.6	-0.4	-0.2	-0.7	0.8	0.0
					472	-0.4	-0.1	1.0	-0.5	-1.8	0.0
			RC ENV~2	Max	465	0.2	-0.0	-0.1	0.3	-1.4	0.0
					466	0.1	-0.1	1.3	0.1	1.6	0.0
					473	-0.1	0.1	0.9	-0.1	1.7	0.0

				472	0.1	0.3	1.9	0.2	-1.1	0.0
			Min	465	0.1	-0.1	-0.4	-0.0	-1.6	0.0
				466	-0.0	-0.3	1.2	-0.3	1.1	0.0
				473	-0.2	0.0	0.2	-0.5	1.3	0.0
				472	-0.1	0.1	1.2	-0.3	-1.3	0.0
425	1	1	SX (RS)	466	0.2	0.3	0.4	0.1	0.6	0.0
				467	0.4	0.2	0.2	0.2	0.9	0.0
				474	0.2	0.3	0.6	0.1	0.8	0.0
				473	0.4	0.2	0.8	0.2	0.7	0.0
			SY (RS)	466	0.5	0.4	0.5	0.7	0.2	0.0
				467	0.3	0.3	0.5	0.6	0.2	0.0
				474	0.5	0.4	0.5	0.6	0.2	0.0
				473	0.3	0.3	0.4	0.6	0.2	0.0
		RC ENV~1	Max	466	0.6	0.4	1.4	0.6	-0.8	0.0
				467	0.5	0.1	0.9	0.4	1.9	0.0
				474	0.4	0.4	0.8	0.7	1.8	0.0
				473	0.3	0.5	3.0	0.7	-0.5	0.0
			Min	466	-0.4	-0.4	0.4	-0.8	-2.3	0.0
				467	-0.3	-0.6	-0.2	-0.9	0.0	0.0
				474	-0.6	-0.4	-0.5	-0.6	0.2	0.0
				473	-0.5	-0.1	1.0	-0.5	-2.2	0.0
		RC ENV~2	Max	466	0.2	0.0	1.1	0.2	-1.3	0.0
				467	0.2	-0.2	0.4	0.2	1.4	0.0
				474	-0.1	0.1	0.5	0.0	1.4	0.0
				473	0.0	0.3	2.2	0.2	-1.1	0.0
			Min	466	0.1	-0.1	0.7	-0.1	-1.7	0.0
				467	-0.0	-0.3	0.1	-0.3	0.7	0.0
				474	-0.2	-0.0	-0.1	-0.4	0.9	0.0
				473	-0.2	0.2	1.5	-0.3	-1.6	0.0
426	1	1	SX (RS)	467	0.1	0.3	0.6	0.1	0.9	0.0
				468	0.5	0.3	0.3	0.2	1.1	0.0
				475	0.2	0.3	0.6	0.1	1.0	0.0
				474	0.5	0.3	0.9	0.2	0.9	0.0
			SY (RS)	467	0.5	0.4	0.4	0.7	0.2	0.0
				468	0.4	0.5	0.5	0.7	0.2	0.0
				475	0.5	0.4	0.5	0.6	0.2	0.0
				474	0.4	0.4	0.4	0.6	0.2	0.0
		RC ENV~1	Max	467	0.7	0.4	2.7	0.5	-0.1	0.0
				468	0.7	0.2	-0.1	0.4	1.4	0.0
				475	0.4	0.4	0.6	0.7	1.3	0.0
				474	0.3	0.7	3.4	0.7	0.0	0.0
			Min	467	-0.4	-0.4	1.0	-0.9	-1.8	0.0
				468	-0.4	-0.8	-1.5	-0.9	-0.8	0.0
				475	-0.7	-0.3	-0.7	-0.6	-0.7	0.0
				474	-0.6	-0.2	1.3	-0.6	-1.9	0.0
		RC ENV~2	Max	467	0.2	0.0	2.0	0.1	-0.8	0.0
				468	0.3	-0.2	-0.5	0.2	0.8	0.0
				475	-0.1	0.0	0.3	0.1	0.6	0.0
				474	0.0	0.4	2.5	0.1	-0.7	0.0
			Min	467	0.1	-0.0	1.5	-0.2	-1.3	0.0
				468	-0.0	-0.5	-1.1	-0.3	-0.0	0.0
				475	-0.3	-0.0	-0.2	-0.4	0.1	0.0
				474	-0.3	0.2	1.9	-0.4	-1.4	0.0
427	1	1	SX (RS)	468	0.1	0.3	1.1	0.1	1.0	0.0
				469	0.4	0.2	1.0	0.2	1.1	0.0
				476	0.2	0.3	0.9	0.2	0.9	0.0

					475	0.4	0.2	0.9	0.2	1.1	0.0
				SY (RS)	468	0.6	0.3	0.3	0.8	0.1	0.0
					469	0.4	0.7	0.5	0.8	0.2	0.0
					476	0.5	0.2	0.5	0.6	0.2	0.0
					475	0.4	0.6	0.5	0.6	0.1	0.0
			RC ENV~1	Max	468	0.7	0.2	3.5	0.5	0.8	0.0
					469	0.6	0.3	-0.1	0.5	0.5	0.0
					476	0.4	0.4	0.7	0.7	0.3	0.0
					475	0.3	0.9	3.8	0.7	0.9	0.0
				Min	468	-0.4	-0.4	0.9	-1.1	-1.2	0.0
					469	-0.3	-1.0	-2.8	-1.1	-1.7	0.0
					476	-0.7	-0.2	-1.0	-0.6	-1.5	0.0
					475	-0.5	-0.2	1.5	-0.7	-1.3	0.0
			RC ENV~2	Max	468	0.3	-0.0	2.6	0.0	0.0	0.0
					469	0.3	-0.3	-1.0	0.2	-0.2	0.0
					476	-0.2	0.1	0.3	0.1	-0.3	0.0
					475	0.0	0.5	2.8	0.1	0.1	0.0
				Min	468	0.2	-0.1	1.7	-0.3	-0.5	0.0
					469	0.0	-0.6	-2.0	-0.3	-0.9	0.0
					476	-0.3	0.0	-0.3	-0.4	-0.9	0.0
					475	-0.3	0.2	2.2	-0.4	-0.7	0.0
428	1	1	SX (RS)		469	0.1	0.3	1.3	0.2	0.8	0.0
					196	0.5	0.1	1.6	0.4	1.0	0.0
					199	0.1	0.4	1.3	0.2	0.6	0.0
					476	0.4	0.2	1.0	0.4	1.1	0.0
				SY (RS)	469	0.5	0.1	0.5	0.9	0.2	0.0
					196	0.2	0.7	0.5	0.9	0.2	0.0
					199	0.4	0.2	0.5	0.6	0.1	0.0
					476	0.2	0.7	0.6	0.6	0.1	0.0
			RC ENV~1	Max	469	0.6	0.2	3.6	0.5	1.5	0.0
					196	0.5	0.3	0.4	0.4	-0.6	0.0
					199	0.3	0.6	0.9	0.8	-0.9	0.0
					476	0.3	1.0	4.1	0.8	1.7	0.0
				Min	469	-0.3	-0.5	0.7	-1.3	-0.2	0.0
					196	-0.4	-1.1	-3.3	-1.3	-2.6	0.0
					199	-0.6	-0.2	-1.6	-0.4	-2.4	0.0
					476	-0.5	-0.3	1.7	-0.7	-0.4	0.0
			RC ENV~2	Max	469	0.2	-0.1	2.6	-0.1	0.9	0.0
					196	0.2	-0.3	-1.1	0.1	-1.2	0.0
					199	-0.1	0.3	0.4	0.2	-1.4	0.0
					476	0.1	0.6	3.1	0.2	1.0	0.0
				Min	469	0.1	-0.3	1.6	-0.4	0.4	0.0
					196	-0.1	-0.6	-2.3	-0.5	-1.9	0.0
					199	-0.2	0.1	-0.4	-0.2	-1.8	0.0
					476	-0.2	0.3	2.5	-0.4	0.2	0.0
429	1	1	SX (RS)		424	0.2	0.2	0.3	0.2	0.1	0.0
					470	0.2	0.2	0.4	0.1	0.3	0.0
					477	0.2	0.3	1.2	0.2	0.1	0.0
					432	0.2	0.2	1.0	0.1	0.1	0.0
				SY (RS)	424	0.2	0.3	0.9	0.8	0.2	0.0
					470	0.2	0.1	0.6	0.8	0.2	0.0
					477	0.2	0.3	0.5	0.4	0.2	0.0
					432	0.2	0.1	1.0	0.4	0.2	0.0
			RC ENV~1	Max	424	0.4	0.0	1.2	1.5	0.3	0.0
					470	0.1	-0.1	2.3	1.3	0.6	0.0

					477	0.1	0.5	2.0	-0.0	0.7	0.0
					432	0.4	0.6	1.8	0.1	0.4	0.0
				Min	424	-0.1	-0.6	-0.6	-0.3	-0.4	0.0
					470	-0.4	-0.6	0.7	-0.5	-0.1	0.0
					477	-0.4	-0.0	-0.3	-1.4	-0.0	0.0
					432	-0.1	0.1	-0.3	-1.2	-0.3	0.0
			RC ENV~2	Max	424	0.3	-0.2	0.5	1.0	0.1	0.0
					470	-0.1	-0.2	1.7	0.9	0.3	0.0
					477	-0.1	0.4	0.8	-0.4	0.5	0.0
					432	0.3	0.4	1.1	-0.4	0.3	0.0
				Min	424	0.1	-0.4	-0.2	0.5	-0.3	0.0
					470	-0.3	-0.4	1.3	0.3	-0.0	0.0
					477	-0.3	0.2	0.7	-0.9	0.0	0.0
					432	0.1	0.2	0.4	-0.8	-0.1	0.0
430	1	1	SX (RS)		470	0.2	0.3	0.1	0.2	0.2	0.0
					471	0.2	0.1	0.4	0.2	0.4	0.0
					478	0.2	0.3	0.8	0.1	0.3	0.0
					477	0.2	0.1	0.5	0.2	0.4	0.0
			SY (RS)		470	0.4	0.5	0.8	0.7	0.2	0.0
					471	0.4	0.3	0.4	0.8	0.2	0.0
					478	0.4	0.5	0.2	0.4	0.2	0.0
					477	0.4	0.3	1.0	0.5	0.2	0.0
			RC ENV~1	Max	470	0.5	0.2	0.7	1.3	-0.2	0.0
					471	0.3	0.0	2.7	1.0	1.0	0.0
					478	0.3	0.7	1.9	0.1	1.3	0.0
					477	0.5	0.5	1.5	0.2	0.0	0.0
				Min	470	-0.3	-0.7	-0.9	-0.3	-0.8	0.0
					471	-0.5	-0.5	1.3	-0.6	0.3	0.0
					478	-0.5	-0.3	0.3	-1.1	0.5	0.0
					477	-0.3	-0.0	-0.4	-1.1	-0.7	0.0
			RC ENV~2	Max	470	0.2	-0.2	0.0	0.9	-0.2	0.0
					471	-0.1	-0.2	2.0	0.7	0.7	0.0
					478	-0.1	0.3	1.4	-0.3	1.0	0.0
					477	0.2	0.4	0.9	-0.2	-0.1	0.0
				Min	470	0.1	-0.4	-0.6	0.4	-0.6	0.0
					471	-0.2	-0.4	1.7	0.1	0.6	0.0
					478	-0.3	0.2	0.9	-0.8	0.7	0.0
					477	0.1	0.2	-0.2	-0.8	-0.4	0.0
431	1	1	SX (RS)		471	0.2	0.3	0.2	0.1	0.3	0.0
					472	0.3	0.1	0.3	0.2	0.5	0.0
					479	0.2	0.3	0.7	0.1	0.4	0.0
					478	0.3	0.1	0.6	0.2	0.4	0.0
			SY (RS)		471	0.5	0.5	0.4	0.6	0.1	0.0
					472	0.4	0.3	0.4	0.6	0.2	0.0
					479	0.5	0.5	0.3	0.4	0.1	0.0
					478	0.4	0.3	0.6	0.5	0.2	0.0
			RC ENV~1	Max	471	0.6	0.4	0.3	1.0	-0.7	0.0
					472	0.4	0.1	2.4	0.7	1.7	0.0
					479	0.3	0.7	1.9	0.3	1.9	0.0
					478	0.5	0.5	1.6	0.4	-0.4	0.0
				Min	471	-0.4	-0.7	-0.8	-0.4	-1.5	0.0
					472	-0.5	-0.5	1.2	-0.7	0.6	0.0
					479	-0.6	-0.4	0.2	-0.9	0.8	0.0
					478	-0.4	-0.1	-0.2	-0.9	-1.2	0.0
			RC ENV~2	Max	471	0.2	-0.1	0.1	0.7	-0.8	0.0
					472	-0.0	-0.2	1.8	0.5	1.3	0.0

				479	-0.1	0.2	1.4	-0.2	1.4	0.0
				478	0.2	0.4	1.2	-0.1	-0.8	0.0
			Min	471	0.1	-0.3	-0.5	0.2	-1.1	0.0
				472	-0.1	-0.3	1.6	-0.0	1.0	0.0
				479	-0.3	0.1	0.6	-0.6	1.2	0.0
				478	0.1	0.2	-0.1	-0.6	-0.8	0.0
432	1	1	SX (RS)	472	0.2	0.3	0.3	0.1	0.4	0.0
				473	0.3	0.1	0.1	0.2	0.7	0.0
				480	0.3	0.3	0.8	0.1	0.6	0.0
				479	0.3	0.1	0.9	0.2	0.5	0.0
			SY (RS)	472	0.5	0.5	0.3	0.6	0.1	0.0
				473	0.4	0.3	0.5	0.6	0.2	0.0
				480	0.5	0.5	0.4	0.5	0.2	0.0
				479	0.4	0.3	0.3	0.5	0.2	0.0
		RC ENV~1	Max	472	0.6	0.4	0.7	0.8	-0.9	0.0
				473	0.4	0.1	1.7	0.6	2.1	0.0
				480	0.3	0.6	1.3	0.4	2.2	0.0
				479	0.4	0.5	2.3	0.5	-0.6	0.0
			Min	472	-0.3	-0.6	-0.1	-0.5	-2.0	0.0
				473	-0.4	-0.5	0.7	-0.7	0.5	0.0
				480	-0.6	-0.4	-0.4	-0.8	0.7	0.0
				479	-0.4	-0.1	0.4	-0.7	-1.9	0.0
		RC ENV~2	Max	472	0.3	-0.1	0.5	0.5	-1.3	0.0
				473	0.0	-0.2	1.3	0.3	1.5	0.0
				480	-0.1	0.1	0.9	-0.1	1.6	0.0
				479	0.1	0.4	1.7	0.1	-1.1	0.0
			Min	472	0.1	-0.2	-0.0	0.1	-1.5	0.0
				473	-0.1	-0.4	1.2	-0.1	1.0	0.0
				480	-0.3	0.1	0.1	-0.5	1.3	0.0
				479	-0.0	0.2	0.6	-0.4	-1.4	0.0
433	1	1	SX (RS)	473	0.3	0.3	0.5	0.0	0.6	0.0
				474	0.3	0.2	0.1	0.2	0.9	0.0
				481	0.3	0.3	0.8	0.1	0.8	0.0
				480	0.3	0.2	0.9	0.2	0.7	0.0
			SY (RS)	473	0.5	0.4	0.3	0.6	0.2	0.0
				474	0.4	0.4	0.5	0.5	0.2	0.0
				481	0.5	0.4	0.5	0.5	0.2	0.0
				480	0.4	0.3	0.3	0.4	0.2	0.0
		RC ENV~1	Max	473	0.7	0.4	1.6	0.7	-0.7	0.0
				474	0.4	0.1	1.1	0.6	1.8	0.0
				481	0.3	0.5	0.7	0.5	1.8	0.0
				480	0.4	0.6	3.0	0.6	-0.4	0.0
			Min	473	-0.3	-0.5	0.4	-0.6	-2.2	0.0
				474	-0.3	-0.6	0.2	-0.7	-0.1	0.0
				481	-0.7	-0.4	-1.0	-0.8	0.2	0.0
				480	-0.4	-0.1	0.8	-0.6	-2.1	0.0
		RC ENV~2	Max	473	0.3	-0.0	1.2	0.5	-1.3	0.0
				474	0.1	-0.2	0.7	0.3	1.3	0.0
				481	-0.2	0.1	0.3	-0.0	1.3	0.0
				480	0.0	0.4	2.2	0.2	-1.0	0.0
			Min	473	0.1	-0.1	0.7	0.0	-1.6	0.0
				474	-0.0	-0.4	0.5	-0.2	0.6	0.0
				481	-0.4	0.0	-0.5	-0.5	0.9	0.0
				480	-0.1	0.2	1.3	-0.4	-1.5	0.0
434	1	1	SX (RS)	474	0.3	0.3	0.6	0.1	0.8	0.0
				475	0.3	0.2	0.4	0.2	1.1	0.0

					482	0.3	0.3	0.8	0.1	1.0	0.0
					481	0.3	0.2	0.9	0.2	1.0	0.0
				SY (RS)	474	0.5	0.4	0.3	0.6	0.2	0.0
					475	0.4	0.5	0.5	0.6	0.1	0.0
					482	0.5	0.4	0.6	0.5	0.1	0.0
					481	0.4	0.4	0.3	0.4	0.2	0.0
			RC ENV~1	Max	474	0.7	0.4	2.6	0.7	-0.1	0.0
					475	0.5	0.2	0.6	0.6	1.3	0.0
					482	0.3	0.5	0.2	0.5	1.3	0.0
					481	0.4	0.7	3.5	0.6	0.2	0.0
				Min	474	-0.3	-0.5	0.8	-0.6	-1.8	0.0
					475	-0.3	-0.8	-0.4	-0.7	-0.9	0.0
					482	-0.7	-0.4	-1.5	-0.8	-0.6	0.0
					481	-0.5	-0.1	1.3	-0.6	-1.7	0.0
			RC ENV~2	Max	474	0.4	0.0	1.9	0.5	-0.8	0.0
					475	0.1	-0.2	0.2	0.4	0.7	0.0
					482	-0.2	0.1	-0.2	-0.0	0.7	0.0
					481	0.0	0.5	2.6	0.2	-0.6	0.0
				Min	474	0.2	-0.1	1.3	-0.0	-1.3	0.0
					475	0.0	-0.5	-0.3	-0.1	-0.1	0.0
					482	-0.4	0.0	-1.0	-0.5	0.1	0.0
					481	-0.1	0.2	1.9	-0.4	-1.3	0.0
435	1	1		SX (RS)	475	0.2	0.3	0.9	0.1	1.0	0.0
					476	0.2	0.1	0.8	0.3	1.0	0.0
					483	0.3	0.3	0.9	0.2	1.0	0.0
					482	0.2	0.1	1.0	0.3	1.1	0.0
				SY (RS)	475	0.5	0.4	0.3	0.7	0.1	0.0
					476	0.4	0.5	0.5	0.6	0.1	0.0
					483	0.5	0.4	0.7	0.5	0.1	0.0
					482	0.4	0.5	0.3	0.4	0.1	0.0
			RC ENV~1	Max	475	0.7	0.3	3.5	0.7	0.7	0.0
					476	0.5	0.2	0.6	0.7	0.4	0.0
					483	0.3	0.5	-0.0	0.5	0.4	0.0
					482	0.4	0.8	3.6	0.6	0.9	0.0
				Min	475	-0.3	-0.5	1.0	-0.7	-1.2	0.0
					476	-0.3	-0.8	-1.3	-0.7	-1.7	0.0
					483	-0.7	-0.3	-1.8	-0.8	-1.5	0.0
					482	-0.5	-0.2	1.4	-0.7	-1.2	0.0
			RC ENV~2	Max	475	0.4	-0.0	2.6	0.4	-0.0	0.0
					476	0.1	-0.3	-0.2	0.4	-0.2	0.0
					483	-0.2	0.1	-0.5	0.1	-0.3	0.0
					482	0.0	0.5	2.7	0.2	0.2	0.0
				Min	475	0.2	-0.1	1.8	-0.0	-0.6	0.0
					476	0.0	-0.5	-0.9	-0.1	-1.0	0.0
					483	-0.4	0.0	-1.1	-0.5	-0.9	0.0
					482	-0.1	0.3	2.1	-0.4	-0.6	0.0
436	1	1		SX (RS)	476	0.2	0.3	1.2	0.2	0.9	0.0
					199	0.2	0.0	1.3	0.4	0.7	0.0
					202	0.2	0.3	1.2	0.3	0.7	0.0
					483	0.2	0.0	1.2	0.4	1.0	0.0
				SY (RS)	476	0.4	0.3	0.5	0.7	0.1	0.0
					199	0.3	0.5	0.5	0.7	0.1	0.0
					202	0.3	0.3	0.6	0.4	0.0	0.0
					483	0.3	0.4	0.4	0.4	0.1	0.0
			RC ENV~1	Max	476	0.5	0.2	4.1	0.6	1.5	0.0

					199	0.3	0.1	0.7	0.6	-0.8	0.0
					202	0.1	0.5	0.3	0.6	-0.9	0.0
					483	0.3	0.8	3.6	0.6	1.7	0.0
				Min	476	-0.2	-0.5	1.1	-0.8	-0.3	0.0
					199	-0.2	-0.8	-2.0	-0.9	-2.4	0.0
					202	-0.5	-0.2	-2.1	-0.5	-2.4	0.0
					483	-0.4	-0.1	1.1	-0.8	-0.3	0.0
			RC ENV~2	Max	476	0.3	-0.1	3.1	0.3	0.9	0.0
					199	0.1	-0.3	-0.4	0.4	-1.3	0.0
					202	-0.2	0.2	-0.4	0.2	-1.4	0.0
					483	-0.0	0.5	2.5	0.2	1.0	0.0
				Min	476	0.1	-0.2	2.0	-0.2	0.4	0.0
					199	0.0	-0.5	-1.4	-0.2	-1.8	0.0
					202	-0.3	0.1	-0.9	-0.3	-1.8	0.0
					483	-0.1	0.3	1.9	-0.4	0.3	0.0
437	1	1	SX (RS)		432	0.2	0.2	0.6	0.2	0.1	0.0
					477	0.2	0.1	0.8	0.1	0.5	0.0
					484	0.2	0.2	1.3	0.3	0.2	0.0
					440	0.1	0.1	1.1	0.2	0.6	0.0
			SY (RS)		432	0.2	0.2	1.0	0.4	0.4	0.0
					477	0.2	0.5	0.9	0.5	0.2	0.0
					484	0.3	0.2	0.5	0.3	0.4	0.0
					440	0.1	0.5	1.4	0.2	0.4	0.0
			RC ENV~1	Max	432	0.5	-0.0	2.5	1.5	0.7	0.0
					477	0.0	0.2	3.6	1.3	0.8	0.0
					484	0.1	0.6	1.8	0.3	0.6	0.0
					440	0.5	0.8	0.9	0.2	1.0	0.0
				Min	432	-0.1	-0.6	0.3	0.0	-0.5	0.0
					477	-0.5	-0.7	1.0	-0.1	-0.2	0.0
					484	-0.5	0.0	-0.9	-0.7	-0.5	0.0
					440	0.0	-0.2	-2.1	-0.5	-0.5	0.0
			RC ENV~2	Max	432	0.3	-0.2	1.9	1.0	0.4	0.0
					477	-0.1	-0.2	2.7	0.9	0.3	0.0
					484	-0.1	0.4	0.4	0.1	0.3	0.0
					440	0.4	0.4	-0.2	-0.0	0.7	0.0
				Min	432	0.1	-0.4	0.9	0.4	-0.2	0.0
					477	-0.3	-0.4	1.9	0.4	-0.1	0.0
					484	-0.4	0.2	0.1	-0.4	-0.3	0.0
					440	0.1	0.3	-1.5	-0.3	-0.0	0.0
438	1	1	SX (RS)		477	0.2	0.2	0.1	0.2	0.3	0.0
					478	0.2	0.1	0.5	0.2	0.5	0.0
					485	0.2	0.2	1.0	0.0	0.5	0.0
					484	0.2	0.1	0.6	0.2	0.5	0.0
			SY (RS)		477	0.4	0.3	0.7	0.4	0.3	0.0
					478	0.5	0.5	0.7	0.5	0.2	0.0
					485	0.4	0.4	0.1	0.2	0.1	0.0
					484	0.5	0.6	1.5	0.2	0.2	0.0
			RC ENV~1	Max	477	0.6	0.1	2.2	1.2	0.3	0.0
					478	0.4	0.2	3.0	1.2	1.4	0.0
					485	0.2	0.6	2.5	0.3	1.2	0.0
					484	0.6	0.8	0.5	0.2	0.2	0.0
				Min	477	-0.2	-0.6	0.3	-0.1	-0.6	0.0
					478	-0.6	-0.7	1.1	-0.2	0.3	0.0
					485	-0.6	-0.2	0.3	-0.6	0.2	0.0
					484	-0.3	-0.3	-3.6	-0.7	-0.9	0.0
			RC ENV~2	Max	477	0.3	-0.2	1.6	0.8	0.2	0.0

					478	-0.1	-0.2	2.2	0.8	0.9	0.0
					485	-0.2	0.3	1.8	0.2	0.9	0.0
					484	0.3	0.4	-0.6	-0.0	-0.0	0.0
				Min	477	0.2	-0.4	0.5	0.3	-0.5	0.0
					478	-0.3	-0.4	1.8	0.2	0.8	0.0
					485	-0.4	0.2	1.2	-0.3	0.5	0.0
					484	0.1	0.2	-2.5	-0.4	-0.4	0.0
439	1	1	SX (RS)		478	0.2	0.2	0.4	0.1	0.5	0.0
					479	0.2	0.1	0.4	0.2	0.5	0.0
					486	0.3	0.2	0.7	0.2	0.5	0.0
					485	0.2	0.1	1.2	0.2	0.5	0.0
			SY (RS)		478	0.4	0.5	0.3	0.4	0.1	0.0
					479	0.5	0.3	0.5	0.4	0.2	0.0
					486	0.4	0.5	0.1	0.3	0.2	0.0
					485	0.6	0.4	0.6	0.3	0.2	0.0
			RC ENV~1	Max	478	0.6	0.3	1.6	0.9	-0.4	0.0
					479	0.5	0.1	2.4	0.9	2.0	0.0
					486	0.2	0.7	2.5	0.4	1.9	0.0
					485	0.7	0.6	1.0	0.3	-0.4	0.0
				Min	478	-0.2	-0.7	0.2	-0.3	-1.4	0.0
					479	-0.6	-0.6	1.0	-0.4	0.7	0.0
					486	-0.6	-0.4	0.4	-0.7	0.7	0.0
					485	-0.5	-0.1	-2.3	-0.6	-1.4	0.0
			RC ENV~2	Max	478	0.4	-0.1	1.2	0.6	-0.7	0.0
					479	-0.1	-0.2	1.8	0.6	1.5	0.0
					486	-0.2	0.3	1.8	0.2	1.4	0.0
					485	0.2	0.4	0.4	0.1	-0.9	0.0
				Min	478	0.2	-0.3	0.3	0.1	-1.0	0.0
					479	-0.2	-0.4	1.5	0.0	1.1	0.0
					486	-0.4	0.1	0.8	-0.4	1.2	0.0
					485	0.1	0.2	-1.6	-0.4	-1.0	0.0
440	1	1	SX (RS)		479	0.3	0.2	0.4	0.1	0.5	0.0
					480	0.2	0.1	0.1	0.2	0.7	0.0
					487	0.4	0.2	0.9	0.2	0.6	0.0
					486	0.3	0.1	1.1	0.2	0.5	0.0
			SY (RS)		479	0.4	0.5	0.3	0.5	0.1	0.0
					480	0.5	0.3	0.4	0.4	0.2	0.0
					487	0.4	0.5	0.4	0.4	0.2	0.0
					486	0.5	0.3	0.3	0.3	0.2	0.0
			RC ENV~1	Max	479	0.6	0.4	1.4	0.8	-0.8	0.0
					480	0.4	0.0	1.8	0.7	2.2	0.0
					487	0.2	0.6	1.3	0.5	2.2	0.0
					486	0.6	0.6	2.0	0.5	-0.7	0.0
				Min	479	-0.2	-0.6	0.3	-0.4	-1.9	0.0
					480	-0.5	-0.6	0.8	-0.5	0.5	0.0
					487	-0.6	-0.3	-0.5	-0.7	0.7	0.0
					486	-0.4	-0.0	-0.3	-0.6	-2.0	0.0
			RC ENV~2	Max	479	0.4	-0.1	1.1	0.5	-1.3	0.0
					480	-0.1	-0.2	1.4	0.4	1.6	0.0
					487	-0.2	0.2	0.9	0.1	1.6	0.0
					486	0.2	0.4	1.4	0.2	-1.2	0.0
				Min	479	0.2	-0.2	0.3	0.0	-1.4	0.0
					480	-0.2	-0.4	1.1	-0.1	1.1	0.0
					487	-0.4	0.1	0.0	-0.4	1.3	0.0
					486	0.1	0.2	-0.0	-0.3	-1.5	0.0
441	1	1	SX (RS)		480	0.4	0.2	0.5	0.1	0.6	0.0

					481	0.2	0.1	0.2	0.2	1.0	0.0
					488	0.4	0.2	1.0	0.2	0.8	0.0
					487	0.3	0.1	1.0	0.3	0.7	0.0
				SY (RS)	480	0.5	0.5	0.3	0.5	0.2	0.0
					481	0.4	0.4	0.4	0.4	0.2	0.0
					488	0.4	0.4	0.5	0.4	0.2	0.0
					487	0.4	0.3	0.3	0.3	0.2	0.0
			RC ENV~1	Max	480	0.7	0.4	1.8	0.8	-0.7	0.0
					481	0.4	0.1	1.4	0.6	1.8	0.0
					488	0.2	0.5	0.6	0.5	1.9	0.0
					487	0.5	0.7	3.0	0.6	-0.5	0.0
				Min	480	-0.2	-0.5	0.5	-0.5	-2.2	0.0
					481	-0.5	-0.7	0.5	-0.6	-0.1	0.0
					488	-0.8	-0.3	-1.5	-0.7	0.2	0.0
					487	-0.4	-0.0	0.6	-0.5	-2.2	0.0
			RC ENV~2	Max	480	0.5	-0.0	1.4	0.5	-1.3	0.0
					481	-0.0	-0.2	1.1	0.3	1.3	0.0
					488	-0.2	0.1	0.0	0.1	1.4	0.0
					487	0.2	0.5	2.2	0.3	-1.1	0.0
				Min	480	0.2	-0.1	0.8	0.0	-1.6	0.0
					481	-0.1	-0.5	0.7	-0.2	0.6	0.0
					488	-0.5	0.0	-1.0	-0.4	1.0	0.0
					487	0.0	0.3	1.2	-0.3	-1.6	0.0
442	1	1		SX (RS)	481	0.4	0.3	0.7	0.1	0.8	0.0
					482	0.2	0.1	0.5	0.3	1.1	0.0
					489	0.5	0.3	1.1	0.2	1.1	0.0
					488	0.2	0.1	0.9	0.3	1.0	0.0
				SY (RS)	481	0.6	0.5	0.4	0.5	0.2	0.0
					482	0.5	0.4	0.4	0.4	0.2	0.0
					489	0.6	0.5	0.7	0.3	0.1	0.0
					488	0.5	0.4	0.3	0.3	0.2	0.0
			RC ENV~1	Max	481	0.8	0.4	2.7	0.9	-0.2	0.0
					482	0.5	0.1	1.3	0.6	1.2	0.0
					489	0.2	0.5	-0.3	0.5	1.4	0.0
					488	0.5	0.8	3.8	0.7	0.2	0.0
				Min	481	-0.3	-0.5	0.9	-0.4	-1.9	0.0
					482	-0.4	-0.8	0.2	-0.6	-1.1	0.0
					489	-0.9	-0.4	-3.1	-0.7	-0.7	0.0
					488	-0.4	-0.1	1.4	-0.4	-1.8	0.0
			RC ENV~2	Max	481	0.6	0.0	2.0	0.6	-0.9	0.0
					482	0.0	-0.3	0.9	0.3	0.5	0.0
					489	-0.2	0.1	-0.9	0.1	0.7	0.0
					488	0.1	0.5	2.9	0.4	-0.5	0.0
				Min	481	0.2	-0.1	1.4	0.0	-1.4	0.0
					482	-0.0	-0.5	0.3	-0.2	-0.2	0.0
					489	-0.7	-0.0	-2.3	-0.4	0.2	0.0
					488	0.0	0.3	2.1	-0.2	-1.2	0.0
443	1	1		SX (RS)	482	0.4	0.3	0.8	0.1	1.1	0.0
					483	0.1	0.1	0.7	0.3	1.1	0.0
					490	0.4	0.3	0.8	0.2	1.1	0.0
					489	0.1	0.1	1.0	0.3	1.2	0.0
				SY (RS)	482	0.5	0.6	0.5	0.5	0.2	0.0
					483	0.5	0.4	0.5	0.4	0.1	0.0
					490	0.5	0.7	0.9	0.3	0.1	0.0
					489	0.5	0.4	0.2	0.2	0.2	0.0

			RC ENV~1	Max	482	0.8	0.5	3.8	0.9	0.8	0.0
					483	0.5	0.1	1.1	0.7	0.2	0.0
					490	0.2	0.7	-0.9	0.5	0.5	0.0
					489	0.5	0.8	3.7	0.8	1.2	0.0
				Min	482	-0.3	-0.7	1.3	-0.4	-1.4	0.0
					483	-0.5	-0.7	-0.3	-0.6	-1.9	0.0
					490	-0.8	-0.6	-3.5	-0.6	-1.8	0.0
					489	-0.6	-0.1	1.5	-0.3	-1.2	0.0
			RC ENV~2	Max	482	0.5	0.0	2.8	0.6	-0.1	0.0
					483	0.0	-0.3	0.7	0.4	-0.4	0.0
					490	-0.2	0.1	-1.5	0.2	-0.3	0.0
					489	0.0	0.5	2.8	0.5	0.4	0.0
				Min	482	0.2	-0.1	2.0	0.0	-0.6	0.0
					483	0.0	-0.5	-0.0	-0.2	-1.2	0.0
					490	-0.6	-0.0	-2.6	-0.3	-1.1	0.0
					489	-0.0	0.3	2.3	-0.1	-0.4	0.0
444	1	1	SX (RS)		483	0.3	0.3	1.0	0.3	1.1	0.0
					202	0.1	0.2	1.0	0.4	0.7	0.0
					205	0.4	0.3	1.2	0.4	1.1	0.0
					490	0.1	0.1	1.3	0.3	1.0	0.0
			SY (RS)		483	0.3	0.6	0.7	0.5	0.1	0.0
					202	0.4	0.3	0.6	0.4	0.1	0.0
					205	0.3	0.7	0.8	0.2	0.2	0.0
					490	0.5	0.3	0.4	0.2	0.1	0.0
			RC ENV~1	Max	483	0.7	0.5	5.0	0.7	1.8	0.0
					202	0.5	0.0	0.9	0.8	-1.0	0.0
					205	0.1	0.8	-0.5	0.8	-0.7	0.0
					490	0.5	0.7	3.4	0.8	1.9	0.0
				Min	483	-0.1	-0.7	1.8	-0.6	-0.4	0.0
					202	-0.4	-0.8	-1.1	-0.6	-2.7	0.0
					205	-0.8	-0.6	-2.9	-0.3	-3.3	0.0
					490	-0.5	0.0	0.8	-0.4	-0.1	0.0
			RC ENV~2	Max	483	0.5	-0.0	3.7	0.5	1.1	0.0
					202	0.0	-0.2	0.0	0.5	-1.4	0.0
					205	-0.1	0.1	-1.5	0.5	-1.6	0.0
					490	0.1	0.5	2.3	0.5	1.3	0.0
				Min	483	0.1	-0.1	2.8	-0.1	0.4	0.0
					202	-0.0	-0.6	-0.6	-0.2	-2.0	0.0
					205	-0.6	0.0	-1.9	-0.1	-2.4	0.0
					490	0.0	0.2	1.5	-0.2	0.5	0.0
445	1	1	SX (RS)		440	0.1	0.1	1.9	0.3	0.6	0.0
					484	0.1	0.2	0.2	0.1	1.1	0.0
					491	0.2	0.2	6.7	0.3	1.0	0.0
					448	0.2	0.1	5.0	0.2	1.4	0.0
			SY (RS)		440	0.5	0.6	1.5	0.2	0.9	0.0
					484	0.3	1.1	2.4	0.2	0.1	0.0
					491	0.6	0.4	0.7	1.0	0.1	0.0
					448	0.2	1.3	4.6	1.2	1.0	0.0
			RC ENV~1	Max	440	0.7	0.4	5.4	1.0	1.9	0.0
					484	0.1	0.8	6.2	0.9	1.3	0.0
					491	0.3	0.7	7.0	2.2	0.8	0.0
					448	0.6	1.6	2.4	2.0	2.5	0.0
				Min	440	-0.3	-0.9	0.6	-0.2	-0.4	0.0
					484	-0.6	-1.4	0.6	-0.0	-0.9	0.0
					491	-0.8	-0.1	-6.4	0.0	-1.7	0.0
					448	-0.0	-1.0	-7.7	-0.4	-0.7	0.0

			RC ENV~2	Max	440	0.4	-0.2	4.0	0.6	1.3	0.0
					484	-0.1	-0.2	4.5	0.6	0.3	0.0
					491	-0.2	0.4	1.1	1.6	0.0	0.0
					448	0.4	0.5	-2.1	1.1	1.8	0.0
				Min	440	0.2	-0.4	1.8	0.1	0.4	0.0
					484	-0.4	-0.5	3.0	0.2	-0.4	0.0
					491	-0.4	0.2	-1.0	0.6	-1.2	0.0
					448	0.1	0.3	-5.2	0.5	0.5	0.0
446	1	1	SX (RS)		484	0.2	0.1	1.3	0.2	0.8	0.0
					485	0.4	0.3	1.4	0.2	0.7	0.0
					492	0.3	0.1	0.7	0.5	0.7	0.0
					491	0.6	0.3	2.5	0.7	1.2	0.0
			SY (RS)		484	0.4	0.3	0.4	0.2	0.3	0.0
					485	0.8	0.7	1.3	0.2	0.2	0.0
					492	0.3	0.5	0.8	0.2	0.3	0.0
					491	0.9	0.9	1.7	0.6	0.5	0.0
			RC ENV~1	Max	484	0.6	0.1	3.8	0.5	1.2	0.0
					485	0.6	0.4	4.5	0.8	1.7	0.0
					492	0.1	0.7	4.2	1.8	1.6	0.0
					491	1.1	1.2	-0.4	1.3	0.9	0.0
				Min	484	-0.2	-0.6	0.5	-0.4	-0.8	0.0
					485	-0.9	-0.9	0.9	-0.2	0.4	0.0
					492	-0.6	-0.3	1.3	0.2	0.1	0.0
					491	-0.8	-0.6	-8.4	-0.0	-1.5	0.0
			RC ENV~2	Max	484	0.4	-0.2	2.8	0.3	0.8	0.0
					485	-0.0	-0.2	3.3	0.5	1.1	0.0
					492	-0.2	0.4	3.0	1.3	1.1	0.0
					491	0.4	0.5	-2.2	0.9	0.3	0.0
				Min	484	0.2	-0.4	1.2	-0.2	-0.2	0.0
					485	-0.4	-0.5	2.3	0.0	1.0	0.0
					492	-0.4	0.2	1.8	0.3	0.6	0.0
					491	0.0	0.2	-6.0	0.2	-0.4	0.0
447	1	1	SX (RS)		485	0.4	0.1	0.4	0.1	0.7	0.0
					486	0.3	0.1	0.5	0.2	0.5	0.0
					493	0.4	0.1	0.9	0.4	0.5	0.0
					492	0.4	0.1	1.7	0.3	0.6	0.0
			SY (RS)		485	0.3	0.5	0.7	0.2	0.1	0.0
					486	0.6	0.3	0.5	0.3	0.2	0.0
					493	0.3	0.5	0.3	0.3	0.2	0.0
					492	0.6	0.2	0.5	0.2	0.1	0.0
			RC ENV~1	Max	485	0.6	0.3	1.7	0.5	-0.2	0.0
					486	0.4	-0.0	2.7	0.5	2.2	0.0
					493	0.2	0.7	3.0	0.8	2.1	0.0
					492	0.7	0.6	1.0	0.7	-0.4	0.0
				Min	485	-0.1	-0.7	0.2	-0.5	-1.5	0.0
					486	-0.7	-0.6	1.1	-0.4	0.8	0.0
					493	-0.7	-0.3	0.4	-0.4	0.8	0.0
					492	-0.4	0.0	-3.3	-0.1	-1.6	0.0
			RC ENV~2	Max	485	0.4	-0.1	1.3	0.3	-0.6	0.0
					486	-0.1	-0.2	2.0	0.3	1.7	0.0
					493	-0.2	0.3	2.2	0.6	1.6	0.0
					492	0.4	0.4	-0.0	0.5	-1.0	0.0
				Min	485	0.2	-0.3	0.4	-0.3	-1.1	0.0
					486	-0.3	-0.4	1.6	-0.2	1.3	0.0
					493	-0.5	0.1	0.9	-0.1	1.3	0.0
					492	0.1	0.2	-2.3	0.0	-1.1	0.0

448	1	1	SX (RS)	486	0.4	0.2	0.4	0.2	0.5	0.0
				487	0.3	0.1	0.2	0.2	0.7	0.0
				494	0.5	0.2	1.0	0.3	0.6	0.0
				493	0.3	0.1	1.3	0.3	0.5	0.0
			SY (RS)	486	0.4	0.5	0.4	0.4	0.2	0.0
				487	0.5	0.3	0.5	0.3	0.2	0.0
				494	0.3	0.5	0.4	0.4	0.2	0.0
				493	0.5	0.3	0.4	0.3	0.2	0.0
			RC ENV~1 Max	486	0.7	0.3	1.4	0.6	-0.8	0.0
				487	0.4	0.0	1.9	0.5	2.3	0.0
				494	0.2	0.6	1.4	0.6	2.4	0.0
				493	0.7	0.6	2.0	0.7	-0.8	0.0
			Min	486	-0.2	-0.6	0.3	-0.5	-2.1	0.0
				487	-0.6	-0.6	0.8	-0.6	0.5	0.0
				494	-0.8	-0.3	-0.5	-0.6	0.8	0.0
				493	-0.4	0.0	-0.5	-0.4	-2.1	0.0
			RC ENV~2 Max	486	0.5	-0.1	1.0	0.4	-1.3	0.0
				487	-0.1	-0.2	1.4	0.3	1.7	0.0
				494	-0.2	0.3	1.0	0.3	1.7	0.0
				493	0.3	0.5	1.3	0.4	-1.3	0.0
			Min	486	0.2	-0.3	0.4	-0.2	-1.5	0.0
				487	-0.3	-0.5	1.2	-0.3	1.2	0.0
				494	-0.5	0.1	0.0	-0.3	1.4	0.0
				493	0.1	0.2	-0.2	-0.2	-1.6	0.0
449	1	1	SX (RS)	487	0.5	0.2	0.4	0.2	0.6	0.0
				488	0.3	0.1	0.1	0.3	1.0	0.0
				495	0.5	0.2	1.1	0.3	0.9	0.0
				494	0.3	0.1	1.1	0.4	0.7	0.0
			SY (RS)	487	0.4	0.5	0.4	0.4	0.2	0.0
				488	0.5	0.3	0.4	0.3	0.2	0.0
				495	0.4	0.5	0.5	0.3	0.1	0.0
				494	0.5	0.3	0.5	0.3	0.2	0.0
			RC ENV~1 Max	487	0.9	0.3	1.9	0.7	-0.8	0.0
				488	0.4	0.0	1.4	0.4	1.8	0.0
				495	0.2	0.6	0.6	0.6	2.0	0.0
				494	0.6	0.7	3.1	0.8	-0.5	0.0
			Min	487	-0.2	-0.6	0.6	-0.5	-2.3	0.0
				488	-0.6	-0.7	0.5	-0.7	-0.1	0.0
				495	-0.9	-0.3	-1.7	-0.6	0.3	0.0
				494	-0.4	-0.0	0.7	-0.4	-2.3	0.0
			RC ENV~2 Max	487	0.6	-0.1	1.4	0.4	-1.4	0.0
				488	-0.1	-0.2	1.1	0.2	1.3	0.0
				495	-0.2	0.2	-0.1	0.3	1.5	0.0
				494	0.3	0.5	2.3	0.5	-1.1	0.0
			Min	487	0.2	-0.2	0.8	-0.1	-1.7	0.0
				488	-0.3	-0.5	0.8	-0.4	0.6	0.0
				495	-0.7	0.1	-1.2	-0.4	1.0	0.0
				494	0.1	0.2	1.3	-0.2	-1.7	0.0
450	1	1	SX (RS)	488	0.6	0.2	0.6	0.2	0.8	0.0
				489	0.3	0.2	0.4	0.3	1.3	0.0
				496	0.7	0.2	1.4	0.4	1.1	0.0
				495	0.4	0.2	1.0	0.5	1.0	0.0
			SY (RS)	488	0.5	0.5	0.4	0.4	0.1	0.0
				489	0.5	0.5	0.5	0.3	0.2	0.0
				496	0.5	0.4	0.6	0.3	0.1	0.0
				495	0.5	0.4	0.4	0.3	0.2	0.0

			RC ENV~1	Max	488	1.1	0.3	2.9	0.7	-0.3	0.0
					489	0.4	0.1	1.4	0.3	1.3	0.0
					496	0.3	0.5	-0.5	0.8	1.5	0.0
					495	0.7	0.8	4.4	1.2	0.1	0.0
				Min	488	-0.3	-0.6	1.0	-0.5	-2.0	0.0
					489	-0.6	-0.9	0.3	-0.8	-1.3	0.0
					496	-1.2	-0.3	-4.3	-0.4	-0.8	0.0
					495	-0.4	-0.1	1.6	-0.2	-1.8	0.0
			RC ENV~2	Max	488	0.8	-0.0	2.2	0.4	-1.1	0.0
					489	-0.1	-0.2	1.0	0.1	0.5	0.0
					496	-0.2	0.2	-1.3	0.5	0.7	0.0
					495	0.3	0.6	3.3	0.7	-0.6	0.0
				Min	488	0.2	-0.2	1.6	-0.1	-1.5	0.0
					489	-0.3	-0.6	0.4	-0.5	-0.4	0.0
					496	-0.9	0.1	-3.1	-0.2	0.2	0.0
					495	0.1	0.2	2.4	0.0	-1.3	0.0
451	1	1	SX (RS)		489	0.8	0.4	1.2	0.1	1.2	0.0
					490	0.1	0.2	1.1	0.3	1.4	0.0
					497	1.0	0.5	2.0	0.7	1.6	0.0
					496	0.3	0.3	0.8	0.6	1.3	0.0
			SY (RS)		489	0.7	0.8	0.8	0.3	0.2	0.0
					490	0.6	0.4	0.5	0.2	0.2	0.0
					497	0.8	0.9	1.2	0.3	0.3	0.0
					496	0.6	0.5	0.4	0.1	0.3	0.0
			RC ENV~1	Max	489	1.4	0.7	5.3	0.7	0.8	0.0
					490	0.6	0.0	2.9	0.3	0.2	0.0
					497	0.5	0.9	-2.0	1.5	0.7	0.0
					496	0.7	1.0	4.8	1.7	1.3	0.0
				Min	489	-0.4	-0.8	1.6	-0.4	-1.6	0.0
					490	-0.7	-0.8	0.1	-0.7	-2.6	0.0
					497	-1.6	-1.0	-8.9	0.0	-2.6	0.0
					496	-0.5	-0.1	2.3	0.3	-1.3	0.0
			RC ENV~2	Max	489	1.0	0.2	3.9	0.5	-0.1	0.0
					490	-0.0	-0.2	2.1	0.1	-0.7	0.0
					497	-0.1	0.1	-3.1	1.0	-0.5	0.0
					496	0.3	0.7	3.6	1.3	0.4	0.0
				Min	489	0.1	-0.1	2.6	-0.1	-0.7	0.0
					490	-0.1	-0.6	0.6	-0.5	-1.9	0.0
					497	-1.2	-0.3	-6.4	0.2	-1.6	0.0
					496	0.1	0.2	3.1	0.4	-0.5	0.0
452	1	1	SX (RS)		490	0.5	0.4	0.7	0.2	1.6	0.0
					205	0.1	0.3	1.6	0.4	0.4	0.0
					208	0.4	0.4	4.0	0.4	0.3	0.0
					497	0.2	0.3	5.2	0.5	1.5	0.0
			SY (RS)		490	0.4	1.1	1.5	0.3	0.2	0.0
					205	0.7	0.4	0.9	0.3	0.4	0.0
					208	0.3	1.3	2.5	0.6	0.6	0.0
					497	0.8	0.3	0.9	0.4	0.3	0.0
			RC ENV~1	Max	490	0.9	1.1	5.8	0.7	2.5	0.0
					205	0.7	0.1	3.8	0.6	-1.5	0.0
					208	0.1	1.4	2.1	1.5	-1.0	0.0
					497	0.7	0.8	5.6	2.0	3.1	0.0
				Min	490	-0.2	-1.2	1.7	-0.5	-0.6	0.0
					205	-0.7	-0.9	-0.2	-0.7	-3.0	0.0
					208	-0.8	-1.2	-5.8	0.3	-2.4	0.0
					497	-0.8	0.0	-4.9	0.6	-0.1	0.0

			RC ENV~2	Max	490	0.6	0.1	4.3	0.4	1.7	0.0
					205	0.1	-0.2	2.7	0.3	-1.8	0.0
					208	-0.1	0.1	-1.2	1.1	-1.6	0.0
					497	0.1	0.6	1.7	1.5	2.2	0.0
				Min	490	0.1	-0.1	3.2	-0.2	0.5	0.0
					205	-0.1	-0.6	0.6	-0.4	-2.3	0.0
					208	-0.5	-0.0	-2.6	0.4	-1.8	0.0
					497	-0.2	0.2	-2.4	0.6	0.9	0.0
453	1	1	SX (RS)		448	0.1	0.5	2.7	0.4	1.4	0.0
					491	1.5	0.7	8.2	0.8	1.7	0.0
					498	1.1	0.7	4.4	1.0	1.5	0.0
					9	2.6	0.8	9.9	2.4	9.1	0.0
			SY (RS)		448	1.2	1.4	4.7	1.2	0.7	0.0
					491	1.3	2.2	7.3	1.3	0.6	0.0
					498	1.0	0.2	2.9	0.8	0.6	0.0
					9	1.5	3.8	9.1	8.2	1.9	0.0
			RC ENV~1	Max	448	1.4	1.1	9.9	0.6	6.1	0.0
					491	1.3	1.8	16.6	0.7	2.2	0.0
					498	0.9	0.9	9.9	6.7	1.9	0.0
					9	2.7	4.1	-3.1	11.9	11.9	0.0
				Min	448	-0.9	-1.7	0.1	-1.8	0.7	0.0
					491	-1.7	-2.5	-1.1	-1.9	-1.3	0.0
					498	-1.4	-0.4	-0.0	2.0	-1.1	0.0
					9	-2.4	-3.4	-31.9	-4.4	-6.4	-0.0
			RC ENV~2	Max	448	0.5	-0.1	7.3	-0.1	4.3	0.0
					491	0.1	-0.2	11.9	-0.2	0.7	0.0
					498	-0.1	0.5	7.1	4.9	0.7	0.0
					9	0.8	0.7	-11.3	6.2	6.2	0.0
				Min	448	0.2	-0.5	4.5	-0.9	1.8	0.0
					491	-0.6	-0.6	6.2	-0.8	-0.1	0.0
					498	-0.6	0.1	3.4	2.5	-0.3	0.0
					9	-0.3	0.2	-23.0	3.2	1.4	-0.0
454	1	1	SX (RS)		491	0.6	0.3	1.0	0.2	1.6	0.0
					492	0.7	0.1	2.3	0.3	0.6	0.0
					499	0.7	0.2	1.2	1.0	0.7	0.0
					498	0.8	0.2	4.4	1.2	1.5	0.0
			SY (RS)		491	0.2	0.8	6.3	0.4	0.1	0.0
					492	0.7	0.2	0.5	0.5	0.1	0.0
					499	0.3	0.6	1.5	1.1	0.3	0.0
					498	0.5	0.0	5.4	1.9	0.1	0.0
			RC ENV~1	Max	491	0.9	0.6	6.3	-0.7	1.6	0.0
					492	0.5	-0.1	6.1	-0.3	1.8	0.0
					499	0.5	0.8	5.1	2.4	1.9	0.0
					498	1.0	0.6	3.3	3.4	1.3	0.0
				Min	491	-0.4	-1.0	-6.3	-2.3	-1.5	0.0
					492	-0.9	-0.6	0.6	-1.3	0.5	0.0
					499	-1.0	-0.3	0.9	0.1	0.5	0.0
					498	-0.6	0.1	-7.5	-0.5	-1.8	0.0
			RC ENV~2	Max	491	0.5	-0.1	0.0	-0.6	1.0	0.0
					492	-0.0	-0.2	4.4	-0.4	1.3	0.0
					499	-0.1	0.4	3.7	1.8	1.4	0.0
					498	0.5	0.4	-1.0	2.3	0.5	0.0
				Min	491	0.1	-0.4	-0.8	-1.7	-0.3	0.0
					492	-0.5	-0.4	2.8	-1.0	1.2	0.0
					499	-0.5	0.2	1.9	0.5	1.1	0.0
					498	0.0	0.2	-4.7	1.0	-0.4	0.0

455	1	1	SX (RS)	492	0.6	0.1	0.4	0.5	0.8	0.0
				493	0.4	0.1	0.7	0.3	0.6	0.0
				500	0.6	0.1	1.0	0.5	0.5	0.0
				499	0.5	0.1	1.2	0.5	0.7	0.0
			SY (RS)	492	0.3	0.4	0.7	0.4	0.3	0.0
				493	0.5	0.3	0.7	0.2	0.2	0.0
				500	0.3	0.5	0.8	0.5	0.2	0.0
				499	0.5	0.3	0.7	0.2	0.2	0.0
			RC ENV~1 Max	492	0.8	0.2	0.7	0.2	-0.2	0.0
				493	0.3	0.0	3.4	0.1	2.3	0.0
				500	0.3	0.7	2.9	1.0	2.4	0.0
				499	0.7	0.6	1.1	1.3	-0.3	0.0
			Min	492	-0.3	-0.6	-0.8	-1.1	-1.8	0.0
				493	-0.7	-0.6	1.1	-0.8	0.8	0.0
				500	-0.8	-0.2	0.3	-0.4	1.0	0.0
				499	-0.3	-0.1	-1.9	0.2	-1.7	0.0
			RC ENV~2 Max	492	0.5	-0.2	0.1	0.1	-0.8	0.0
				493	-0.1	-0.3	2.5	-0.0	1.7	0.0
				500	-0.2	0.4	2.1	0.7	1.8	0.0
				499	0.4	0.4	0.5	1.0	-0.9	0.0
			Min	492	0.2	-0.4	-0.5	-0.8	-1.2	0.0
				493	-0.4	-0.4	1.8	-0.5	1.4	0.0
				500	-0.5	0.2	0.9	-0.2	1.5	0.0
				499	0.1	0.3	-1.3	0.2	-1.0	0.0
456	1	1	SX (RS)	493	0.5	0.1	0.3	0.3	0.6	0.0
				494	0.4	0.1	0.4	0.3	0.7	0.0
				501	0.5	0.2	0.9	0.4	0.7	0.0
				500	0.4	0.1	1.0	0.4	0.6	0.0
			SY (RS)	493	0.3	0.5	0.7	0.4	0.1	0.0
				494	0.5	0.3	0.4	0.3	0.2	0.0
				501	0.3	0.5	0.5	0.5	0.1	0.0
				500	0.5	0.3	0.8	0.4	0.1	0.0
			RC ENV~1 Max	493	0.8	0.3	1.2	0.6	-0.9	0.0
				494	0.3	0.0	2.0	0.3	2.4	0.0
				501	0.2	0.7	1.3	0.8	2.5	0.0
				500	0.7	0.6	2.1	0.9	-0.8	0.0
			Min	493	-0.2	-0.7	-0.2	-0.7	-2.2	0.0
				494	-0.7	-0.6	0.8	-0.7	0.6	0.0
				501	-0.8	-0.3	-0.4	-0.7	0.8	0.0
				500	-0.3	0.0	-0.0	-0.3	-2.1	0.0
			RC ENV~2 Max	493	0.5	-0.2	0.5	0.3	-1.4	0.0
				494	-0.2	-0.2	1.5	0.1	1.8	0.0
				501	-0.3	0.3	0.9	0.4	1.9	0.0
				500	0.4	0.5	1.5	0.5	-1.3	0.0
			Min	493	0.3	-0.3	0.1	-0.4	-1.7	0.0
				494	-0.4	-0.5	1.2	-0.5	1.2	0.0
				501	-0.6	0.2	0.1	-0.4	1.5	0.0
				500	0.2	0.2	0.4	-0.1	-1.6	0.0
457	1	1	SX (RS)	494	0.6	0.2	0.4	0.3	0.6	0.0
				495	0.4	0.1	0.2	0.4	1.0	0.0
				502	0.6	0.2	1.0	0.4	0.9	0.0
				501	0.4	0.1	0.9	0.4	0.7	0.0
			SY (RS)	494	0.4	0.5	0.4	0.4	0.1	0.0
				495	0.5	0.4	0.4	0.3	0.2	0.0
				502	0.4	0.5	0.6	0.4	0.0	0.0
				501	0.6	0.4	0.5	0.4	0.2	0.0

			RC ENV~1	Max	494	0.9	0.3	1.7	0.6	-0.8	0.0
					495	0.3	0.1	1.1	0.3	1.9	0.0
					502	0.2	0.7	0.6	0.7	2.0	0.0
					501	0.8	0.7	3.2	0.9	-0.6	0.0
				Min	494	-0.2	-0.7	0.6	-0.7	-2.5	0.0
					495	-0.8	-0.7	0.2	-0.9	-0.1	0.0
					502	-1.0	-0.3	-1.3	-0.7	0.2	0.0
					501	-0.3	-0.1	0.9	-0.5	-2.4	0.0
			RC ENV~2	Max	494	0.7	-0.2	1.3	0.4	-1.5	0.0
					495	-0.1	-0.2	0.6	0.1	1.4	0.0
					502	-0.2	0.3	0.0	0.4	1.5	0.0
					501	0.5	0.5	2.4	0.6	-1.2	0.0
				Min	494	0.2	-0.3	0.8	-0.3	-1.8	0.0
					495	-0.5	-0.5	0.6	-0.6	0.7	0.0
					502	-0.7	0.1	-0.9	-0.4	1.0	0.0
					501	0.2	0.2	1.5	-0.2	-1.7	0.0
458	1	1	SX (RS)		495	0.7	0.2	0.6	0.4	0.9	0.0
					496	0.5	0.2	0.4	0.6	1.3	0.0
					503	0.7	0.2	1.1	0.6	1.2	0.0
					502	0.6	0.2	0.9	0.6	0.9	0.0
			SY (RS)		495	0.5	0.5	0.5	0.3	0.0	0.0
					496	0.6	0.4	0.4	0.3	0.3	0.0
					503	0.4	0.5	0.6	0.2	0.1	0.0
					502	0.6	0.4	0.6	0.4	0.2	0.0
			RC ENV~1	Max	495	1.2	0.3	3.3	0.5	-0.3	0.0
					496	0.3	0.1	0.4	0.0	1.4	0.0
					503	0.3	0.7	-0.3	1.2	1.5	0.0
					502	0.9	0.8	4.6	1.3	-0.0	0.0
				Min	495	-0.3	-0.7	1.2	-0.8	-2.1	0.0
					496	-0.8	-0.8	-0.5	-1.4	-1.2	0.0
					503	-1.3	-0.3	-3.2	-0.3	-0.9	0.0
					502	-0.3	-0.1	1.8	-0.2	-1.9	0.0
			RC ENV~2	Max	495	0.9	-0.1	2.5	0.2	-1.1	0.0
					496	-0.1	-0.2	0.0	-0.1	0.5	0.0
					503	-0.2	0.3	-0.9	0.8	0.7	0.0
					502	0.6	0.5	3.4	0.8	-0.8	0.0
				Min	495	0.2	-0.3	1.7	-0.5	-1.6	0.0
					496	-0.6	-0.6	-0.3	-0.9	-0.3	0.0
					503	-0.9	0.1	-2.3	-0.1	0.1	0.0
					502	0.1	0.2	2.5	-0.0	-1.4	0.0
459	1	1	SX (RS)		496	1.1	0.2	1.8	0.4	1.2	0.0
					497	0.7	0.5	0.8	0.4	2.0	0.0
					504	1.2	0.3	3.4	1.1	1.9	0.0
					503	0.8	0.4	1.1	1.0	1.2	0.0
			SY (RS)		496	0.6	0.5	0.2	0.3	0.1	0.0
					497	0.6	0.7	3.4	0.1	0.4	0.0
					504	0.6	0.3	3.0	1.1	0.2	0.0
					503	0.7	0.6	0.9	0.7	0.3	0.0
			RC ENV~1	Max	496	1.7	0.3	7.0	0.1	0.7	0.0
					497	0.4	0.3	3.3	-0.5	0.5	0.0
					504	0.6	0.5	-0.6	2.9	0.8	0.0
					503	1.2	1.0	6.7	2.6	1.0	0.0
				Min	496	-0.5	-0.6	1.6	-1.1	-1.6	0.0
					497	-1.0	-1.1	-3.5	-1.8	-3.4	0.0
					504	-1.9	-0.1	-9.6	0.3	-3.0	0.0
					503	-0.4	-0.2	2.8	0.4	-1.4	0.0

			RC ENV~2	Max	496	1.2	-0.1	5.1	-0.1	-0.3	0.0
					497	-0.1	-0.1	0.1	-0.5	-0.9	0.0
					504	-0.1	0.3	-2.8	2.1	-0.6	0.0
					503	0.8	0.7	4.9	1.9	0.1	0.0
				Min	496	0.1	-0.2	3.0	-0.8	-0.8	0.0
					497	-0.7	-0.8	-0.5	-1.4	-2.5	0.0
					504	-1.3	0.1	-6.9	0.7	-2.0	0.0
					503	0.1	0.2	3.5	0.6	-0.7	0.0
460	1	1	SX (RS)		497	2.0	0.8	6.2	0.8	2.1	0.0
					208	0.2	0.9	2.0	0.4	1.8	0.0
					10	3.0	0.9	7.5	2.0	7.6	0.0
					504	1.3	1.0	3.3	1.0	1.9	0.0
			SY (RS)		497	1.3	2.0	4.3	0.6	0.4	0.0
					208	1.3	0.9	2.4	0.5	0.5	0.0
					10	1.5	3.2	5.3	4.3	1.9	0.0
					504	1.3	0.4	1.9	0.3	0.5	0.0
			RC ENV~1	Max	497	3.0	2.1	19.4	-0.1	3.1	0.0
					208	1.2	0.3	3.8	-0.1	-1.9	0.0
					10	1.7	3.0	-5.7	7.8	1.3	0.0
					504	1.9	1.7	13.2	5.3	3.1	0.0
				Min	497	-1.1	-1.9	2.3	-1.7	-1.0	0.0
					208	-1.4	-1.6	-1.1	-1.3	-7.3	0.0
					10	-4.5	-3.4	-30.9	-0.8	-15.7	-0.0
					504	-0.7	-0.4	3.2	1.7	-0.7	0.0
			RC ENV~2	Max	497	2.1	0.5	14.0	-0.2	1.8	0.0
					208	-0.1	-0.1	1.8	-0.2	-3.1	0.0
					10	-0.0	0.2	-10.7	5.6	-4.2	0.0
					504	1.4	1.2	9.6	3.9	2.0	0.0
				Min	497	0.1	-0.1	6.8	-1.2	0.4	0.0
					208	-0.3	-1.1	1.3	-0.8	-5.4	0.0
					10	-3.2	-0.6	-22.2	2.5	-11.3	0.0
					504	0.1	0.1	5.5	1.9	0.6	0.0
461	1	1	SX (RS)		449	1.2	0.2	3.4	1.1	1.9	0.0
					450	0.8	0.5	1.0	1.0	1.2	0.0
					506	1.1	0.1	1.7	0.4	1.2	0.0
					505	0.7	0.6	0.9	0.4	2.0	0.0
			SY (RS)		449	0.9	0.4	2.6	0.4	0.4	0.0
					450	0.5	0.6	0.8	0.1	0.1	0.0
					506	0.9	0.5	0.7	0.8	0.2	0.0
					505	0.4	0.8	3.3	0.8	0.3	0.0
			RC ENV~1	Max	449	2.3	0.2	-0.5	-0.7	3.1	0.0
					450	0.4	0.3	7.7	-0.7	1.5	0.0
					506	0.6	0.7	6.7	1.8	1.6	0.0
					505	1.4	1.2	3.0	3.0	3.9	0.0
				Min	449	-0.6	-0.6	-10.9	-3.9	-0.8	0.0
					450	-1.6	-1.0	2.6	-3.9	-0.9	0.0
					506	-2.1	-0.3	2.0	0.2	-0.7	0.0
					505	-0.3	-0.4	-3.6	0.6	-0.5	0.0
			RC ENV~2	Max	449	1.6	-0.1	-2.8	-1.1	2.1	0.0
					450	0.1	-0.1	5.5	-1.2	0.7	0.0
					506	0.2	0.3	5.0	1.4	1.1	0.0
					505	1.0	0.8	0.4	2.2	2.8	0.0
				Min	449	-0.2	-0.4	-7.7	-2.8	0.2	0.0
					450	-1.1	-0.7	3.5	-2.8	-0.1	0.0
					506	-1.5	0.2	2.6	0.7	0.2	0.0
					505	-0.1	0.0	-0.3	1.3	0.7	0.0

462	1	1	SX (RS)	450	0.7	0.1	0.9	0.6	1.2	0.0
				451	0.6	0.3	0.7	0.5	0.9	0.0
				507	0.7	0.1	0.7	0.4	0.9	0.0
				506	0.6	0.3	0.6	0.6	1.3	0.0
			SY (RS)	450	0.7	0.5	0.3	0.6	0.3	0.0
				451	0.4	0.5	0.4	0.4	0.1	0.0
				507	0.7	0.5	0.6	0.5	0.2	0.0
				506	0.4	0.5	0.5	0.4	0.1	0.0
			RC ENV~1 Max	450	1.4	0.3	-0.5	-0.4	0.9	0.0
				451	0.3	0.3	5.2	-0.5	2.0	0.0
				507	0.3	0.7	3.2	1.3	2.5	0.0
				506	1.2	0.8	1.0	2.3	1.2	0.0
			Min	450	-0.3	-0.8	-4.3	-2.0	-1.6	0.0
				451	-1.3	-0.8	1.7	-2.2	0.2	0.0
				507	-1.4	-0.2	1.5	0.2	0.3	0.0
				506	-0.2	-0.2	-0.7	0.4	-1.5	0.0
			RC ENV~2 Max	450	1.0	-0.2	-1.3	-0.6	-0.0	0.0
				451	0.0	-0.1	3.8	-0.8	1.4	0.0
				507	0.1	0.4	2.5	1.0	1.8	0.0
				506	0.9	0.5	0.6	1.7	0.4	0.0
			Min	450	-0.1	-0.4	-3.0	-1.5	-0.9	0.0
				451	-0.9	-0.5	2.3	-1.6	0.9	0.0
				507	-1.0	0.2	1.6	0.3	1.1	0.0
				506	-0.0	0.1	-0.2	0.8	-0.6	0.0
463	1	1	SX (RS)	451	0.5	0.1	0.6	0.4	0.9	0.0
				452	0.5	0.2	0.5	0.4	0.7	0.0
				508	0.5	0.1	0.7	0.3	0.7	0.0
				507	0.5	0.2	0.6	0.4	1.0	0.0
			SY (RS)	451	0.6	0.4	0.3	0.4	0.2	0.0
				452	0.4	0.5	0.3	0.4	0.0	0.0
				508	0.6	0.4	0.4	0.4	0.1	0.0
				507	0.4	0.5	0.5	0.4	0.0	0.0
			RC ENV~1 Max	451	1.1	0.1	0.3	-0.3	-0.2	0.0
				452	0.2	0.3	3.6	-0.3	2.4	0.0
				508	0.3	0.6	2.1	0.9	2.9	0.0
				507	1.1	0.8	2.0	1.5	-0.1	0.0
			Min	451	-0.3	-0.6	-2.3	-1.2	-2.4	0.0
				452	-1.1	-0.7	1.0	-1.5	0.8	0.0
				508	-1.1	-0.1	0.7	0.0	0.8	0.0
				507	-0.2	-0.3	-0.1	0.3	-2.0	0.0
			RC ENV~2 Max	451	0.7	-0.2	-0.3	-0.3	-1.0	0.0
				452	-0.0	-0.2	2.5	-0.6	1.8	0.0
				508	0.0	0.4	1.5	0.7	2.1	0.0
				507	0.7	0.5	1.3	1.1	-0.8	0.0
			Min	451	-0.0	-0.5	-1.5	-0.9	-1.7	0.0
				452	-0.7	-0.4	1.5	-1.1	1.4	0.0
				508	-0.7	0.2	0.7	0.1	1.5	0.0
				507	0.0	0.1	0.4	0.5	-1.4	0.0
464	1	1	SX (RS)	452	0.4	0.1	0.6	0.3	0.7	0.0
				453	0.6	0.2	0.7	0.3	0.6	0.0
				509	0.4	0.1	0.6	0.3	0.6	0.0
				508	0.5	0.2	0.7	0.3	0.7	0.0
			SY (RS)	452	0.5	0.3	0.2	0.4	0.2	0.0
				453	0.4	0.5	0.5	0.4	0.1	0.0
				509	0.5	0.3	0.7	0.4	0.1	0.0

					508	0.4	0.5	0.4	0.5	0.0	0.0
			RC ENV~1	Max	452	0.9	0.1	1.1	-0.1	-0.8	0.0
					453	0.3	0.2	2.2	-0.2	2.1	0.0
					509	0.3	0.6	1.6	0.9	2.7	0.0
					508	0.9	0.7	3.1	1.2	-0.7	0.0
				Min	452	-0.3	-0.6	-0.8	-1.0	-2.9	0.0
					453	-0.9	-0.7	0.0	-1.4	0.9	0.0
					509	-0.9	-0.1	-0.3	-0.0	0.9	0.0
					508	-0.3	-0.2	0.4	0.1	-2.4	0.0
			RC ENV~2	Max	452	0.6	-0.2	0.6	-0.2	-1.5	0.0
					453	-0.1	-0.2	1.5	-0.6	1.6	0.0
					509	-0.0	0.4	0.9	0.7	1.9	0.0
					508	0.7	0.4	2.2	0.9	-1.3	0.0
				Min	452	0.0	-0.5	-0.4	-0.8	-2.1	0.0
					453	-0.7	-0.4	0.6	-1.0	1.4	0.0
					509	-0.6	0.2	-0.1	0.1	1.5	0.0
					508	0.1	0.2	1.1	0.4	-1.8	0.0
465	1	1	SX (RS)		453	0.4	0.2	0.8	0.5	0.6	0.0
					454	0.7	0.1	1.1	0.5	0.7	0.0
					510	0.4	0.2	0.6	0.5	0.8	0.0
					509	0.7	0.2	0.8	0.3	0.5	0.0
			SY (RS)		453	0.5	0.3	0.6	0.4	0.2	0.0
					454	0.4	0.5	0.4	1.0	0.2	0.0
					510	0.4	0.3	0.6	0.5	0.2	0.0
					509	0.4	0.5	0.8	0.7	0.1	0.0
			RC ENV~1	Max	453	0.8	0.0	2.1	-0.3	-0.9	0.0
					454	0.4	0.3	0.7	0.1	1.8	0.0
					510	0.2	0.6	1.0	1.2	1.9	0.0
					509	0.9	0.7	4.4	1.3	-1.0	0.0
				Min	453	-0.2	-0.6	0.3	-1.3	-2.7	0.0
					454	-0.9	-0.8	-1.4	-1.9	0.4	0.0
					510	-0.8	0.0	-1.1	0.2	0.2	0.0
					509	-0.4	-0.3	1.0	-0.1	-2.3	0.0
			RC ENV~2	Max	453	0.5	-0.2	1.4	-0.3	-1.5	0.0
					454	-0.2	-0.2	0.3	-0.8	1.1	0.0
					510	-0.1	0.4	0.4	0.9	1.4	0.0
					509	0.6	0.4	3.1	0.9	-1.5	0.0
				Min	453	0.1	-0.4	0.4	-1.0	-2.0	0.0
					454	-0.6	-0.4	-0.8	-1.4	0.9	0.0
					510	-0.6	0.2	-0.6	0.2	1.0	0.0
					509	0.2	0.2	1.8	0.5	-1.7	0.0
466	1	1	SX (RS)		454	0.5	0.4	1.2	1.0	0.7	0.0
					455	1.1	0.1	4.5	1.2	1.5	0.0
					511	0.4	0.5	1.3	0.2	1.6	0.0
					510	1.0	0.2	2.2	0.2	0.6	0.0
			SY (RS)		454	0.4	0.4	1.8	0.2	0.3	0.0
					455	0.4	0.2	4.8	0.9	0.2	0.0
					511	0.3	0.6	6.3	1.3	0.3	0.0
					510	0.5	0.4	0.3	1.3	0.1	0.0
			RC ENV~1	Max	454	0.7	0.1	4.2	-0.3	-0.5	0.0
					455	0.8	0.0	2.7	-0.3	1.8	0.0
					511	0.2	0.9	6.2	2.5	1.7	0.0
					510	1.2	0.6	6.6	2.1	-0.6	0.0
				Min	454	-0.3	-0.7	0.5	-2.5	-2.0	0.0
					455	-1.3	-0.6	-6.9	-3.2	-1.2	0.0
					511	-0.7	-0.4	-6.3	-0.1	-1.6	0.0

					510	-0.7	-0.2	0.8	-0.4	-1.9	0.0
			RC ENV~2	Max	454	0.5	-0.2	3.2	-0.9	-1.2	0.0
					455	-0.3	-0.2	-1.2	-1.3	0.4	0.0
					511	-0.2	0.5	-0.0	1.8	0.3	0.0
					510	0.5	0.4	4.8	1.3	-1.2	0.0
				Min	454	0.2	-0.4	1.7	-1.9	-1.5	0.0
					455	-0.5	-0.4	-3.9	-2.4	-0.5	0.0
					511	-0.5	0.2	-1.1	0.7	-0.7	0.0
					510	0.2	0.2	2.9	0.7	-1.3	0.0
467	1	1	SX (RS)		455	0.9	0.9	4.6	1.0	1.6	0.0
					9	2.8	1.1	10.1	2.3	9.1	0.0
					512	0.2	0.8	2.4	0.4	1.4	0.0
					511	1.8	0.9	7.9	0.8	1.7	0.0
			SY (RS)		455	1.2	0.1	2.4	2.1	0.5	0.0
					9	1.4	3.9	11.2	9.6	2.5	0.0
					512	1.3	1.5	5.4	2.1	1.2	0.0
					511	1.2	2.3	8.2	2.2	0.7	0.0
			RC ENV~1	Max	455	1.4	0.7	8.7	-1.0	1.1	0.0
					9	2.5	3.7	-2.2	5.5	6.3	0.0
					512	1.1	1.7	10.6	2.8	-0.7	0.0
					511	2.0	2.5	17.2	2.8	1.2	0.0
				Min	455	-1.0	-1.2	-0.5	-6.6	-2.0	0.0
					9	-3.1	-4.0	-31.1	-13.7	-11.9	-0.0
					512	-1.5	-1.3	-0.4	-1.5	-5.7	0.0
					511	-1.5	-2.1	-0.7	-1.5	-2.2	0.0
			RC ENV~2	Max	455	0.4	-0.1	6.3	-2.9	0.1	0.0
					9	0.0	0.0	-13.0	-4.0	-1.7	0.0
					512	-0.1	0.4	7.8	1.0	-2.1	0.0
					511	0.6	0.4	12.4	1.0	0.2	0.0
				Min	455	0.2	-0.5	3.3	-4.8	-0.7	0.0
					9	-0.7	-0.4	-22.5	-6.6	-6.1	-0.0
					512	-0.5	0.1	4.3	-0.0	-4.1	0.0
					511	0.1	0.0	7.2	0.3	-0.6	0.0
468	1	1	SX (RS)		158	0.4	0.4	3.8	0.4	0.4	0.0
					505	0.2	0.4	5.0	0.5	1.6	0.0
					513	0.5	0.4	0.5	0.3	1.6	0.0
					161	0.2	0.5	1.6	0.1	0.3	0.0
			SY (RS)		158	0.5	1.4	3.2	1.3	0.6	0.0
					505	0.8	0.2	1.5	1.2	0.1	0.0
					513	0.6	1.2	1.6	0.5	0.3	0.0
					161	0.7	0.4	1.1	0.6	0.6	0.0
			RC ENV~1	Max	158	0.9	1.4	1.8	-0.0	2.3	0.0
					505	0.8	0.2	5.2	-0.3	0.2	0.0
					513	0.3	1.2	5.1	0.9	0.6	0.0
					161	0.8	0.7	5.3	1.2	3.4	0.0
				Min	158	-0.3	-1.4	-5.9	-2.5	1.0	0.0
					505	-0.8	-0.6	-4.8	-3.3	-3.5	0.0
					513	-1.0	-1.2	2.0	-0.1	-2.6	0.0
					161	-0.7	-0.2	-0.2	-0.1	1.4	0.0
			RC ENV~2	Max	158	0.6	0.2	-1.6	-1.0	1.7	0.0
					505	0.1	-0.0	2.7	-1.4	-0.8	0.0
					513	0.1	0.2	3.8	0.4	-0.2	0.0
					161	0.1	0.5	3.7	0.7	2.5	0.0
				Min	158	-0.0	-0.1	-4.1	-1.7	1.6	0.0
					505	-0.1	-0.4	-2.3	-2.4	-2.5	0.0
					513	-0.7	-0.3	3.2	0.1	-1.8	0.0

				161	-0.0	0.0	1.1	0.6	1.9	0.0
469	1	1	SX (RS)	505	1.0	0.5	1.9	0.7	1.7	0.0
				506	0.3	0.4	0.1	0.6	1.3	0.0
				514	0.8	0.4	1.0	0.2	1.3	0.0
				513	0.2	0.4	1.1	0.1	1.4	0.0
			SY (RS)	505	1.0	1.1	1.3	0.9	0.4	0.0
				506	0.5	0.6	0.6	0.7	0.1	0.0
				514	0.9	0.9	0.9	0.5	0.2	0.0
				513	0.7	0.4	0.3	0.6	0.2	0.0
			RC ENV~1 Max	505	2.0	1.1	-2.2	-0.3	2.6	0.0
				506	0.3	0.3	5.8	-0.6	1.4	0.0
				514	0.5	0.9	5.1	0.8	1.6	0.0
				513	0.8	0.7	4.0	1.3	3.0	0.0
			Min	505	-0.5	-1.0	-10.5	-2.2	-0.7	0.0
				506	-0.8	-0.9	2.3	-2.9	-1.3	0.0
				514	-1.7	-0.9	2.2	-0.2	-0.9	0.0
				513	-0.5	-0.2	0.1	-0.0	-0.3	0.0
			RC ENV~2 Max	505	1.4	0.4	-3.6	-0.7	1.8	0.0
				506	-0.0	-0.1	4.2	-1.0	0.6	0.0
				514	0.1	0.2	3.8	0.3	1.0	0.0
				513	0.3	0.5	2.7	0.8	2.1	0.0
			Min	505	-0.2	-0.2	-7.5	-1.6	0.2	0.0
				506	-0.5	-0.6	2.9	-2.1	-0.5	0.0
				514	-1.2	-0.2	2.3	-0.0	0.1	0.0
				513	0.1	0.1	1.0	0.6	0.6	0.0
470	1	1	SX (RS)	506	0.7	0.2	1.2	0.4	1.2	0.0
				507	0.4	0.3	0.6	0.5	1.0	0.0
				515	0.6	0.1	0.6	0.2	0.9	0.0
				514	0.4	0.3	0.4	0.3	1.3	0.0
			SY (RS)	506	0.8	0.5	0.2	0.5	0.2	0.0
				507	0.4	0.6	0.2	0.4	0.1	0.0
				515	0.7	0.5	0.4	0.4	0.1	0.0
				514	0.5	0.6	0.3	0.4	0.1	0.0
			RC ENV~1 Max	506	1.5	0.4	-0.8	-0.2	0.8	0.0
				507	0.2	0.3	5.2	-0.4	2.0	0.0
				515	0.4	0.7	2.7	0.7	2.5	0.0
				514	0.8	0.9	2.4	1.3	1.2	0.0
			Min	506	-0.4	-0.7	-5.7	-1.2	-1.6	0.0
				507	-0.9	-0.9	1.7	-1.9	-0.0	0.0
				515	-1.3	-0.4	1.5	-0.2	0.3	0.0
				514	-0.2	-0.3	0.3	0.2	-1.4	0.0
			RC ENV~2 Max	506	1.0	-0.1	-1.8	-0.3	-0.1	0.0
				507	-0.0	-0.1	3.7	-0.7	1.3	0.0
				515	0.1	0.3	2.2	0.4	1.8	0.0
				514	0.6	0.5	1.7	1.0	0.5	0.0
			Min	506	-0.1	-0.3	-4.0	-0.9	-1.0	0.0
				507	-0.6	-0.5	2.3	-1.4	0.7	0.0
				515	-0.9	0.1	1.3	-0.1	1.1	0.0
				514	0.0	0.1	0.6	0.5	-0.6	0.0
471	1	1	SX (RS)	507	0.5	0.1	0.8	0.3	0.9	0.0
				508	0.5	0.2	0.6	0.3	0.8	0.0
				516	0.5	0.0	0.5	0.2	0.7	0.0
				515	0.4	0.2	0.4	0.3	1.0	0.0
			SY (RS)	507	0.6	0.5	0.2	0.4	0.1	0.0
				508	0.4	0.5	0.2	0.4	0.0	0.0

					516	0.6	0.5	0.3	0.3	0.1	0.0
					515	0.4	0.5	0.3	0.3	0.1	0.0
			RC ENV~1	Max	507	1.1	0.3	0.2	-0.0	-0.2	0.0
					508	0.2	0.3	3.6	-0.2	2.3	0.0
					516	0.3	0.7	2.0	0.6	2.9	0.0
					515	0.9	0.8	2.7	1.0	0.0	0.0
				Min	507	-0.3	-0.7	-3.1	-0.9	-2.4	0.0
					508	-0.9	-0.8	0.8	-1.4	0.7	0.0
					516	-1.1	-0.2	0.6	-0.4	0.8	0.0
					515	-0.2	-0.3	0.5	0.1	-2.0	0.0
			RC ENV~2	Max	507	0.8	-0.2	-0.5	-0.1	-1.1	0.0
					508	-0.1	-0.2	2.6	-0.5	1.7	0.0
					516	-0.0	0.3	1.6	0.3	2.1	0.0
					515	0.6	0.4	1.8	0.7	-0.7	0.0
				Min	507	-0.0	-0.3	-2.1	-0.6	-1.8	0.0
					508	-0.7	-0.5	1.4	-1.0	1.3	0.0
					516	-0.8	0.2	0.7	-0.2	1.5	0.0
					515	0.1	0.1	0.8	0.3	-1.3	0.0
472	1	1	SX (RS)		508	0.4	0.1	0.7	0.3	0.7	0.0
					509	0.5	0.2	0.9	0.3	0.6	0.0
					517	0.4	0.1	0.4	0.2	0.7	0.0
					516	0.5	0.2	0.5	0.2	0.8	0.0
			SY (RS)		508	0.5	0.4	0.1	0.4	0.1	0.0
					509	0.4	0.5	0.2	0.5	0.0	0.0
					517	0.5	0.4	0.2	0.4	0.1	0.0
					516	0.4	0.5	0.4	0.4	0.1	0.0
			RC ENV~1	Max	508	1.0	0.2	1.0	0.1	-0.8	0.0
					509	0.2	0.3	2.2	-0.0	2.1	0.0
					517	0.2	0.7	1.5	0.7	2.6	0.0
					516	0.9	0.7	3.4	0.7	-0.7	0.0
				Min	508	-0.3	-0.7	-1.4	-0.9	-2.8	0.0
					509	-0.9	-0.7	-0.4	-1.1	0.8	0.0
					517	-1.0	-0.2	0.1	-0.5	0.8	0.0
					516	-0.2	-0.3	0.7	-0.0	-2.3	0.0
			RC ENV~2	Max	508	0.7	-0.2	0.4	-0.0	-1.5	0.0
					509	-0.1	-0.2	1.5	-0.4	1.6	0.0
					517	-0.0	0.4	1.1	0.3	1.9	0.0
					516	0.6	0.4	2.4	0.5	-1.3	0.0
				Min	508	0.0	-0.4	-0.8	-0.6	-2.1	0.0
					509	-0.6	-0.4	0.4	-0.8	1.4	0.0
					517	-0.7	0.2	0.2	-0.3	1.5	0.0
					516	0.1	0.2	1.2	0.2	-1.7	0.0
473	1	1	SX (RS)		509	0.3	0.2	0.7	0.4	0.7	0.0
					510	0.6	0.2	1.5	0.2	0.7	0.0
					518	0.2	0.2	0.5	0.2	0.8	0.0
					517	0.6	0.2	0.6	0.2	0.6	0.0
			SY (RS)		509	0.5	0.4	0.1	0.6	0.2	0.0
					510	0.5	0.5	0.2	0.7	0.0	0.0
					518	0.4	0.4	0.3	0.6	0.0	0.0
					517	0.5	0.5	0.4	0.5	0.1	0.0
			RC ENV~1	Max	509	0.9	0.1	1.8	-0.0	-0.8	0.0
					510	0.3	0.2	0.7	0.1	1.8	0.0
					518	0.2	0.7	1.6	0.9	1.9	0.0
					517	0.9	0.7	4.4	0.8	-0.9	0.0
				Min	509	-0.2	-0.7	-0.1	-1.2	-2.5	0.0
					510	-0.9	-0.7	-2.3	-1.3	0.5	0.0

					518	-0.9	-0.2	0.0	-0.6	0.2	0.0
					517	-0.3	-0.2	1.2	-0.3	-2.1	0.0
			RC ENV~2	Max	509	0.6	-0.2	1.2	-0.1	-1.4	0.0
					510	-0.2	-0.2	0.0	-0.4	1.1	0.0
					518	-0.1	0.4	1.1	0.4	1.4	0.0
					517	0.6	0.4	3.1	0.4	-1.4	0.0
				Min	509	0.1	-0.4	0.1	-0.8	-1.9	0.0
					510	-0.6	-0.4	-1.6	-0.9	1.0	0.0
					518	-0.6	0.2	0.2	-0.3	0.9	0.0
					517	0.2	0.2	1.7	0.0	-1.6	0.0
474	1	1	SX (RS)		510	0.1	0.3	0.3	0.5	0.9	0.0
					511	0.9	0.6	2.5	0.6	1.2	0.0
					519	0.2	0.2	1.5	0.2	0.9	0.0
					518	0.7	0.5	1.2	0.2	0.7	0.0
			SY (RS)		510	0.5	0.4	1.0	1.1	0.2	0.0
					511	0.8	1.0	2.6	1.4	0.6	0.0
					519	0.6	0.2	0.2	1.0	0.5	0.0
					518	0.7	0.8	1.3	0.7	0.2	0.0
			RC ENV~1	Max	510	0.8	0.1	2.9	0.1	-0.1	0.0
					511	0.6	0.8	-0.5	0.7	1.5	0.0
					519	0.3	0.6	3.4	1.1	1.1	0.0
					518	1.0	1.0	5.9	0.8	-0.4	0.0
				Min	510	-0.2	-0.6	0.7	-2.0	-1.9	0.0
					511	-1.1	-1.3	-7.2	-2.2	-0.9	0.0
					519	-0.8	0.1	0.3	-0.9	-0.8	0.0
					518	-0.4	-0.6	1.3	-0.7	-1.9	0.0
			RC ENV~2	Max	510	0.6	-0.2	2.2	-0.5	-0.9	0.0
					511	-0.3	-0.1	-2.5	-0.6	0.4	0.0
					519	-0.1	0.4	2.1	0.2	0.4	0.0
					518	0.6	0.4	4.2	0.1	-1.0	0.0
				Min	510	0.1	-0.4	0.9	-1.3	-1.3	0.0
					511	-0.5	-0.4	-5.2	-1.2	-0.4	0.0
					519	-0.6	0.2	1.1	-0.5	-0.5	0.0
					518	0.2	0.1	2.5	-0.3	-1.2	0.0
475	1	1	SX (RS)		511	0.4	0.1	6.5	0.4	1.1	0.0
					512	0.2	0.3	4.8	0.2	1.4	0.0
					520	0.3	0.2	2.3	0.3	0.5	0.0
					519	0.3	0.4	0.7	0.1	1.1	0.0
			SY (RS)		511	0.7	0.5	0.6	2.0	0.1	0.0
					512	0.1	1.4	5.4	2.1	1.2	0.0
					520	0.6	0.7	2.0	0.8	1.0	0.0
					519	0.2	1.2	2.8	0.7	0.1	0.0
			RC ENV~1	Max	511	0.9	0.2	6.4	0.9	1.4	0.0
					512	-0.1	1.2	2.6	1.2	0.8	0.0
					520	0.3	0.9	4.8	0.6	0.7	0.0
					519	0.8	1.4	7.3	0.6	0.9	0.0
				Min	511	-0.5	-0.7	-6.6	-3.1	-1.0	0.0
					512	-0.8	-1.6	-8.1	-3.0	-2.9	0.0
					520	-0.8	-0.5	0.2	-1.6	-2.0	0.0
					519	-0.0	-1.0	0.7	-0.9	-1.3	0.0
			RC ENV~2	Max	511	0.6	-0.2	0.4	-0.5	0.9	0.0
					512	-0.2	-0.1	-1.6	-0.6	-0.5	0.0
					520	-0.1	0.4	3.4	-0.2	-0.1	0.0
					519	0.6	0.4	5.3	-0.2	0.5	0.0
				Min	511	0.1	-0.4	-1.8	-1.6	-0.0	0.0
					512	-0.6	-0.4	-5.2	-1.3	-2.0	0.0

				520	-0.6	0.2	1.8	-1.1	-1.4	0.0
				519	0.2	0.1	3.4	-0.6	-0.2	0.0
476	1	1	SX (RS)	161	0.4	0.4	0.7	0.4	1.1	0.0
				513	0.2	0.3	0.8	0.2	1.0	0.0
				521	0.4	0.4	0.2	0.3	1.2	0.0
				164	0.2	0.4	0.2	0.2	0.7	0.0
			SY (RS)	161	0.5	0.8	1.4	0.5	0.3	0.0
				513	0.5	0.3	0.7	0.7	0.2	0.0
				521	0.5	0.7	0.8	0.1	0.2	0.0
				164	0.5	0.2	1.2	0.3	0.2	0.0
			RC ENV~1 Max	161	0.9	0.7	-0.4	-0.1	3.4	0.0
				513	0.4	0.2	4.0	0.1	0.2	0.0
				521	0.3	0.8	4.3	0.5	0.4	0.0
				164	0.6	0.6	1.5	0.5	3.1	0.0
			Min	161	-0.2	-0.8	-4.7	-1.2	0.8	0.0
				513	-0.6	-0.5	1.2	-1.3	-2.1	0.0
				521	-0.8	-0.7	2.3	-0.4	-1.9	0.0
				164	-0.4	-0.2	-1.3	-0.0	1.0	0.0
			RC ENV~2 Max	161	0.6	0.0	-1.8	-0.3	2.5	0.0
				513	-0.0	-0.1	2.9	-0.6	-0.5	0.0
				521	0.0	0.1	3.3	0.2	-0.1	0.0
				164	0.2	0.3	0.9	0.3	2.3	0.0
			Min	161	-0.0	-0.1	-3.3	-0.7	1.3	0.0
				513	-0.2	-0.3	1.8	-0.8	-1.5	0.0
				521	-0.5	-0.1	2.5	-0.2	-1.2	0.0
				164	0.1	0.0	-0.1	0.2	1.5	0.0
477	1	1	SX (RS)	513	0.4	0.3	0.1	0.3	1.2	0.0
				514	0.2	0.2	0.4	0.2	1.2	0.0
				522	0.4	0.3	0.3	0.2	1.2	0.0
				521	0.2	0.3	0.3	0.2	1.1	0.0
			SY (RS)	513	0.7	0.8	1.3	0.4	0.2	0.0
				514	0.6	0.5	0.4	0.6	0.0	0.0
				522	0.7	0.7	0.5	0.1	0.2	0.0
				521	0.6	0.4	1.0	0.3	0.2	0.0
			RC ENV~1 Max	513	0.9	0.7	-0.7	0.0	1.9	0.0
				514	0.5	0.3	4.6	-0.0	1.3	0.0
				522	0.4	0.8	3.3	0.2	1.5	0.0
				521	0.8	0.6	2.2	0.5	2.0	0.0
			Min	513	-0.4	-0.9	-5.3	-0.8	-0.5	0.0
				514	-0.8	-0.7	1.8	-1.2	-1.1	0.0
				522	-0.9	-0.7	2.0	-0.6	-0.9	0.0
				521	-0.5	-0.3	-0.6	-0.1	-0.3	0.0
			RC ENV~2 Max	513	0.6	0.1	-2.0	-0.1	1.1	0.0
				514	-0.1	-0.1	3.3	-0.5	0.5	0.0
				522	0.0	0.2	2.7	0.1	0.9	0.0
				521	0.3	0.3	1.5	0.3	1.5	0.0
			Min	513	-0.0	-0.2	-3.7	-0.4	0.1	0.0
				514	-0.3	-0.3	2.2	-0.9	-0.5	0.0
				522	-0.6	-0.1	1.9	-0.4	0.1	0.0
				521	0.1	0.1	0.3	0.2	0.4	0.0
478	1	1	SX (RS)	514	0.5	0.3	0.7	0.2	1.2	0.0
				515	0.3	0.2	0.4	0.3	1.0	0.0
				523	0.5	0.2	0.4	0.2	1.0	0.0
				522	0.3	0.2	0.3	0.2	1.2	0.0
			SY (RS)	514	0.8	0.6	0.8	0.4	0.1	0.0

					515	0.5	0.6	0.1	0.4	0.0	0.0
					523	0.7	0.6	0.3	0.1	0.1	0.0
					522	0.6	0.6	0.6	0.2	0.1	0.0
			RC ENV~1	Max	514	1.1	0.5	-0.8	0.2	0.8	0.0
					515	0.3	0.4	4.8	-0.1	2.0	0.0
					523	0.4	0.7	2.4	0.2	2.5	0.0
					522	0.8	0.8	2.5	0.5	1.0	0.0
				Min	514	-0.4	-0.7	-4.9	-0.7	-1.5	0.0
					515	-0.8	-0.8	1.7	-1.1	-0.1	0.0
					523	-1.0	-0.5	1.3	-0.6	0.1	0.0
					522	-0.4	-0.4	-0.0	-0.0	-1.4	0.0
			RC ENV~2	Max	514	0.8	0.0	-1.4	0.1	-0.2	0.0
					515	-0.1	-0.2	3.4	-0.4	1.3	0.0
					523	-0.0	0.2	2.1	0.1	1.8	0.0
					522	0.4	0.3	1.7	0.3	0.3	0.0
				Min	514	-0.0	-0.2	-3.4	-0.4	-1.0	0.0
					515	-0.5	-0.4	2.0	-0.8	0.6	0.0
					523	-0.7	0.0	1.2	-0.4	1.0	0.0
					522	0.1	0.2	0.6	0.2	-0.6	0.0
479	1	1	SX (RS)		515	0.4	0.1	0.7	0.2	0.9	0.0
					516	0.4	0.2	0.6	0.3	0.8	0.0
					524	0.4	0.1	0.4	0.2	0.8	0.0
					523	0.4	0.2	0.3	0.2	1.0	0.0
			SY (RS)		515	0.6	0.5	0.4	0.3	0.1	0.0
					516	0.5	0.6	0.2	0.3	0.0	0.0
					524	0.6	0.5	0.2	0.1	0.1	0.0
					523	0.5	0.6	0.4	0.2	0.0	0.0
			RC ENV~1	Max	515	1.0	0.3	0.1	0.4	-0.2	0.0
					516	0.2	0.3	3.8	-0.1	2.1	0.0
					524	0.3	0.7	1.9	0.2	2.9	0.0
					523	0.8	0.8	3.0	0.5	0.0	0.0
				Min	515	-0.3	-0.7	-3.2	-0.6	-2.5	0.0
					516	-0.8	-0.8	0.8	-0.9	0.6	0.0
					524	-1.0	-0.3	0.4	-0.8	0.7	0.0
					523	-0.3	-0.3	0.5	-0.0	-2.0	0.0
			RC ENV~2	Max	515	0.7	-0.2	-0.5	0.2	-1.1	0.0
					516	-0.1	-0.2	2.6	-0.3	1.6	0.0
					524	-0.0	0.3	1.5	0.1	2.1	0.0
					523	0.6	0.4	2.0	0.3	-0.6	0.0
				Min	515	0.0	-0.3	-2.1	-0.3	-1.8	0.0
					516	-0.6	-0.4	1.4	-0.6	1.2	0.0
					524	-0.7	0.2	0.5	-0.5	1.5	0.0
					523	0.1	0.2	0.9	0.1	-1.3	0.0
480	1	1	SX (RS)		516	0.3	0.0	0.6	0.2	0.8	0.0
					517	0.4	0.2	0.8	0.2	0.6	0.0
					525	0.3	0.0	0.4	0.2	0.7	0.0
					524	0.4	0.2	0.4	0.2	0.8	0.0
			SY (RS)		516	0.6	0.5	0.2	0.4	0.1	0.0
					517	0.5	0.5	0.6	0.4	0.1	0.0
					525	0.5	0.5	0.4	0.2	0.0	0.0
					524	0.5	0.5	0.2	0.1	0.1	0.0
			RC ENV~1	Max	516	1.0	0.3	0.8	0.5	-0.7	0.0
					517	0.2	0.3	2.6	0.1	2.0	0.0
					525	0.3	0.7	1.5	0.2	2.7	0.0
					524	0.9	0.7	3.8	0.3	-0.6	0.0
				Min	516	-0.3	-0.7	-1.8	-0.6	-2.8	0.0

					517	-0.9	-0.7	-0.1	-0.6	0.8	0.0
					525	-0.9	-0.3	-0.3	-1.0	0.8	0.0
					524	-0.2	-0.3	0.9	-0.1	-2.1	0.0
			RC ENV~2	Max	516	0.7	-0.2	0.2	0.3	-1.4	0.0
					517	-0.1	-0.2	1.8	-0.2	1.5	0.0
					525	-0.1	0.4	1.1	0.0	2.0	0.0
					524	0.6	0.4	2.6	0.2	-1.2	0.0
				Min	516	0.1	-0.4	-1.1	-0.3	-2.1	0.0
					517	-0.6	-0.4	0.5	-0.5	1.3	0.0
					525	-0.7	0.2	-0.0	-0.6	1.5	0.0
					524	0.1	0.2	1.3	-0.0	-1.6	0.0
481	1	1	SX (RS)		517	0.2	0.0	0.5	0.2	0.7	0.0
					518	0.4	0.3	0.9	0.1	0.7	0.0
					526	0.2	0.0	0.5	0.2	0.7	0.0
					525	0.4	0.3	0.4	0.2	0.7	0.0
			SY (RS)		517	0.5	0.5	0.2	0.6	0.0	0.0
					518	0.6	0.6	1.3	0.5	0.1	0.0
					526	0.5	0.4	0.9	0.3	0.1	0.0
					525	0.6	0.5	0.3	0.1	0.2	0.0
			RC ENV~1	Max	517	0.9	0.2	1.2	0.7	-0.7	0.0
					518	0.3	0.3	1.3	0.3	1.7	0.0
					526	0.2	0.7	1.7	0.2	2.0	0.0
					525	0.9	0.8	4.6	0.2	-0.7	0.0
				Min	517	-0.2	-0.7	-0.8	-0.8	-2.5	0.0
					518	-0.9	-0.8	-1.6	-0.7	0.4	0.0
					526	-0.9	-0.2	-0.6	-1.3	0.4	0.0
					525	-0.3	-0.3	1.4	-0.4	-2.0	0.0
			RC ENV~2	Max	517	0.6	-0.2	0.9	0.4	-1.4	0.0
					518	-0.1	-0.2	0.8	0.0	1.1	0.0
					526	-0.1	0.4	0.9	-0.1	1.5	0.0
					525	0.6	0.4	3.2	-0.0	-1.3	0.0
				Min	517	0.1	-0.4	-0.4	-0.3	-1.8	0.0
					518	-0.6	-0.4	-0.6	-0.3	0.9	0.0
					526	-0.6	0.2	-0.2	-0.9	1.0	0.0
					525	0.1	0.2	1.8	-0.2	-1.4	0.0
482	1	1	SX (RS)		518	0.1	0.0	0.6	0.1	0.8	0.0
					519	0.3	0.3	0.3	0.1	0.6	0.0
					527	0.1	0.0	0.5	0.2	0.5	0.0
					526	0.3	0.3	0.4	0.2	0.7	0.0
			SY (RS)		518	0.5	0.3	0.2	0.9	0.1	0.0
					519	0.4	0.7	2.2	0.7	0.1	0.0
					527	0.5	0.2	1.4	0.4	0.3	0.0
					526	0.5	0.6	0.6	0.1	0.1	0.0
			RC ENV~1	Max	518	0.8	0.0	1.5	0.9	-0.2	0.0
					519	0.2	0.5	1.3	0.6	1.1	0.0
					527	0.2	0.6	2.4	-0.0	1.1	0.0
					526	0.8	0.9	5.3	-0.1	-0.3	0.0
				Min	518	-0.3	-0.6	-0.6	-1.0	-1.7	0.0
					519	-0.8	-0.9	-3.1	-0.7	-0.3	0.0
					527	-0.8	0.0	-0.5	-1.8	0.1	0.0
					526	-0.2	-0.4	1.6	-0.8	-1.7	0.0
			RC ENV~2	Max	518	0.6	-0.2	1.0	0.5	-0.8	0.0
					519	-0.2	-0.2	0.0	0.2	0.5	0.0
					527	-0.1	0.4	1.0	-0.4	0.8	0.0
					526	0.6	0.4	3.8	-0.3	-0.7	0.0
				Min	518	0.1	-0.4	-0.2	-0.2	-1.3	0.0

					519	-0.6	-0.4	-1.6	-0.1	-0.1	0.0
					527	-0.6	0.2	-0.1	-1.2	0.1	0.0
					526	0.2	0.2	2.2	-0.6	-1.0	0.0
483	1	1	SX (RS)		519	0.1	0.0	0.9	0.2	0.4	0.0
					520	0.2	0.2	0.8	0.1	0.5	0.0
					528	0.1	0.1	0.4	0.2	0.0	0.0
					527	0.2	0.2	0.4	0.0	0.6	0.0
			SY (RS)		519	0.3	0.2	0.7	1.0	0.4	0.0
					520	0.1	0.6	2.0	0.8	0.4	0.0
					528	0.3	0.3	1.5	0.3	0.4	0.0
					527	0.1	0.6	1.1	0.1	0.1	0.0
			RC ENV~1	Max	519	0.8	-0.0	0.8	1.4	0.3	0.0
					520	-0.0	0.4	1.7	0.8	0.5	0.0
					528	0.0	0.6	2.6	-0.4	0.7	0.0
					527	0.8	0.8	5.6	-0.3	0.5	0.0
				Min	519	-0.1	-0.6	-2.1	-0.9	-0.9	0.0
					520	-0.8	-0.8	-2.2	-0.9	-1.4	0.0
					528	-0.8	-0.0	-0.5	-2.4	-0.5	0.0
					527	0.1	-0.3	1.4	-1.2	-0.9	0.0
			RC ENV~2	Max	519	0.6	-0.2	-0.1	0.9	0.1	0.0
					520	-0.2	-0.2	0.7	0.3	-0.0	0.0
					528	-0.1	0.4	1.2	-0.7	0.5	0.0
					527	0.6	0.4	4.0	-0.4	0.3	0.0
				Min	519	0.1	-0.4	-1.4	0.0	-0.6	0.0
					520	-0.6	-0.4	-0.7	-0.0	-0.9	0.0
					528	-0.6	0.2	-0.0	-1.6	-0.3	0.0
					527	0.2	0.2	2.5	-0.9	-0.4	0.0
484	1	1	SX (RS)		164	0.2	0.4	0.6	0.3	0.7	0.0
					521	0.2	0.3	0.6	0.3	1.0	0.0
					529	0.2	0.3	0.5	0.3	1.0	0.0
					167	0.2	0.4	0.6	0.3	0.7	0.0
			SY (RS)		164	0.5	0.4	1.3	0.2	0.1	0.0
					521	0.5	0.4	0.7	0.3	0.1	0.0
					529	0.5	0.4	0.7	0.3	0.1	0.0
					167	0.5	0.4	1.3	0.2	0.1	0.0
			RC ENV~1	Max	164	0.6	0.3	0.2	0.2	2.5	0.0
					521	0.4	0.3	4.3	0.0	0.3	0.0
					529	0.4	0.6	3.4	0.4	0.4	0.0
					167	0.6	0.5	0.9	0.5	2.8	0.0
				Min	164	-0.3	-0.6	-3.4	-0.6	0.9	0.0
					521	-0.6	-0.5	1.4	-0.5	-1.8	0.0
					529	-0.6	-0.3	1.9	-0.5	-1.7	0.0
					167	-0.3	-0.3	-1.8	-0.2	0.9	0.0
			RC ENV~2	Max	164	0.3	-0.1	-1.0	0.1	1.9	0.0
					521	-0.0	-0.1	3.1	-0.2	-0.3	0.0
					529	-0.0	0.1	2.7	0.1	-0.1	0.0
					167	0.3	0.1	0.5	0.2	2.1	0.0
				Min	164	0.0	-0.1	-2.3	-0.3	1.2	0.0
					521	-0.3	-0.2	2.1	-0.3	-1.3	0.0
					529	-0.3	0.1	1.9	-0.3	-1.0	0.0
					167	0.0	0.1	-0.6	0.0	1.4	0.0
485	1	1	SX (RS)		521	0.3	0.3	0.2	0.2	1.1	0.0
					522	0.3	0.2	0.2	0.2	1.1	0.0
					530	0.3	0.3	0.2	0.2	1.1	0.0
					529	0.3	0.3	0.2	0.2	1.1	0.0

				SY (RS)	521	0.6	0.6	1.1	0.1	0.1	0.0
					522	0.6	0.6	0.4	0.3	0.1	0.0
					530	0.6	0.6	0.4	0.3	0.1	0.0
					529	0.6	0.6	1.1	0.1	0.1	0.0
			RC ENV~1	Max	521	0.8	0.5	0.1	0.4	1.7	0.0
					522	0.4	0.4	4.5	0.1	1.4	0.0
					530	0.4	0.7	2.9	0.3	1.4	0.0
					529	0.8	0.7	1.0	0.2	1.7	0.0
				Min	521	-0.4	-0.7	-3.5	-0.4	-0.5	0.0
					522	-0.8	-0.7	1.7	-0.4	-0.9	0.0
					530	-0.8	-0.5	2.1	-0.7	-0.8	0.0
					529	-0.4	-0.4	-1.5	-0.2	-0.5	0.0
			RC ENV~2	Max	521	0.5	-0.1	-1.1	0.2	1.0	0.0
					522	-0.0	-0.1	3.2	-0.2	0.6	0.0
					530	-0.0	0.2	2.6	0.0	0.9	0.0
					529	0.4	0.2	0.6	0.1	1.2	0.0
				Min	521	0.0	-0.2	-2.4	-0.2	0.0	0.0
					522	-0.4	-0.2	2.1	-0.3	-0.2	0.0
					530	-0.5	0.1	1.8	-0.4	0.1	0.0
					529	0.0	0.1	-0.4	-0.0	0.2	0.0
486	1	1		SX (RS)	522	0.3	0.2	0.3	0.2	1.1	0.0
					523	0.3	0.2	0.3	0.2	1.0	0.0
					531	0.3	0.2	0.3	0.2	1.0	0.0
					530	0.3	0.2	0.3	0.2	1.1	0.0
				SY (RS)	522	0.6	0.6	0.8	0.1	0.1	0.0
					523	0.6	0.6	0.2	0.2	0.1	0.0
					531	0.6	0.6	0.2	0.2	0.1	0.0
					530	0.7	0.6	0.8	0.1	0.1	0.0
			RC ENV~1	Max	522	0.9	0.5	-0.0	0.5	0.8	0.0
					523	0.4	0.4	4.4	-0.0	2.0	0.0
					531	0.4	0.8	2.4	0.1	2.5	0.0
					530	0.9	0.7	1.8	0.2	0.8	0.0
				Min	522	-0.4	-0.8	-3.4	-0.3	-1.5	0.0
					523	-0.9	-0.8	1.6	-0.4	-0.0	0.0
					531	-0.9	-0.5	1.2	-0.8	0.1	0.0
					530	-0.4	-0.4	-0.8	-0.2	-1.5	0.0
			RC ENV~2	Max	522	0.5	-0.1	-0.8	0.3	-0.2	0.0
					523	-0.0	-0.1	3.1	-0.1	1.3	0.0
					531	-0.1	0.3	2.2	-0.0	1.8	0.0
					530	0.5	0.2	1.2	0.1	0.1	0.0
				Min	522	0.1	-0.2	-2.3	-0.1	-1.0	0.0
					523	-0.5	-0.3	1.8	-0.3	0.7	0.0
					531	-0.5	0.1	1.1	-0.5	1.0	0.0
					530	0.0	0.1	-0.0	-0.0	-0.7	0.0
487	1	1		SX (RS)	523	0.4	0.2	0.5	0.2	1.0	0.0
					524	0.4	0.1	0.5	0.2	0.8	0.0
					532	0.4	0.1	0.5	0.2	0.8	0.0
					531	0.4	0.1	0.5	0.2	1.0	0.0
				SY (RS)	523	0.6	0.6	0.4	0.1	0.0	0.0
					524	0.6	0.5	0.3	0.1	0.0	0.0
					532	0.6	0.6	0.3	0.1	0.0	0.0
					531	0.6	0.5	0.4	0.1	0.0	0.0
			RC ENV~1	Max	523	0.9	0.4	0.0	0.7	-0.1	0.0
					524	0.3	0.3	3.9	0.0	2.2	0.0
					532	0.3	0.8	1.9	0.1	3.1	0.0
					531	0.9	0.7	2.9	0.2	-0.1	0.0

				Min	523	-0.3	-0.7	-2.8	-0.2	-2.5	0.0
					524	-0.9	-0.7	1.0	-0.4	0.6	0.0
					532	-0.9	-0.4	0.1	-1.0	0.7	0.0
					531	-0.3	-0.4	0.2	-0.2	-2.0	0.0
			RC ENV~2	Max	523	0.6	-0.2	-0.4	0.4	-1.1	0.0
					524	-0.1	-0.2	2.7	-0.1	1.6	0.0
					532	-0.1	0.3	1.5	-0.1	2.2	0.0
					531	0.6	0.3	2.0	0.1	-0.7	0.0
				Min	523	0.1	-0.3	-1.8	-0.1	-1.8	0.0
					524	-0.6	-0.3	1.4	-0.3	1.2	0.0
					532	-0.6	0.2	0.3	-0.7	1.5	0.0
					531	0.1	0.2	0.7	-0.0	-1.4	0.0
488	1	1	SX (RS)		524	0.3	0.1	0.5	0.2	0.8	0.0
					525	0.3	0.1	0.5	0.2	0.7	0.0
					533	0.3	0.1	0.5	0.2	0.7	0.0
					532	0.3	0.1	0.5	0.2	0.8	0.0
			SY (RS)		524	0.6	0.5	0.2	0.2	0.0	0.0
					525	0.6	0.5	0.7	0.1	0.1	0.0
					533	0.6	0.5	0.7	0.1	0.1	0.0
					532	0.6	0.5	0.2	0.2	0.0	0.0
			RC ENV~1	Max	524	0.9	0.3	0.5	1.0	-0.7	0.0
					525	0.3	0.3	3.4	0.1	2.0	0.0
					533	0.3	0.8	1.4	-0.0	3.0	0.0
					532	0.9	0.7	4.2	0.2	-0.6	0.0
				Min	524	-0.3	-0.7	-2.1	-0.2	-3.0	0.0
					525	-0.9	-0.7	0.3	-0.3	0.7	0.0
					533	-0.9	-0.3	-1.3	-1.3	0.9	0.0
					532	-0.3	-0.3	0.9	-0.2	-2.1	0.0
			RC ENV~2	Max	524	0.6	-0.2	0.1	0.6	-1.5	0.0
					525	-0.1	-0.2	2.3	0.0	1.4	0.0
					533	-0.1	0.4	0.7	-0.2	2.2	0.0
					532	0.6	0.4	2.9	0.1	-1.2	0.0
				Min	524	0.1	-0.4	-1.3	-0.0	-2.2	0.0
					525	-0.6	-0.4	0.9	-0.2	1.3	0.0
					533	-0.6	0.2	-0.7	-0.9	1.6	0.0
					532	0.1	0.2	1.4	-0.1	-1.6	0.0
489	1	1	SX (RS)		525	0.3	0.1	0.4	0.2	0.7	0.0
					526	0.2	0.2	0.4	0.2	0.6	0.0
					534	0.3	0.2	0.4	0.2	0.6	0.0
					533	0.2	0.1	0.4	0.2	0.7	0.0
			SY (RS)		525	0.5	0.5	0.1	0.3	0.1	0.0
					526	0.5	0.5	1.3	0.1	0.1	0.0
					534	0.5	0.5	1.3	0.1	0.1	0.0
					533	0.5	0.5	0.1	0.3	0.1	0.0
			RC ENV~1	Max	525	0.9	0.3	0.8	1.3	-0.8	0.0
					526	0.3	0.3	3.0	0.3	1.6	0.0
					534	0.3	0.7	1.3	-0.2	2.4	0.0
					533	0.9	0.7	5.2	0.2	-0.6	0.0
				Min	525	-0.3	-0.7	-1.6	-0.1	-2.7	0.0
					526	-0.9	-0.7	-0.6	-0.1	0.4	0.0
					534	-0.9	-0.3	-2.5	-1.7	0.6	0.0
					533	-0.3	-0.3	1.7	-0.4	-2.0	0.0
			RC ENV~2	Max	525	0.6	-0.2	0.5	0.9	-1.5	0.0
					526	-0.1	-0.2	2.0	0.2	1.0	0.0
					534	-0.1	0.4	0.1	-0.4	1.7	0.0
					533	0.6	0.4	3.7	-0.0	-1.2	0.0

				Min	525	0.1	-0.4	-0.9	0.1	-2.0	0.0
					526	-0.6	-0.4	0.6	0.0	0.7	0.0
					534	-0.6	0.2	-1.6	-1.2	1.2	0.0
					533	0.1	0.2	2.0	-0.2	-1.3	0.0
490	1	1	SX (RS)		526	0.2	0.1	0.4	0.2	0.7	0.0
					527	0.2	0.1	0.4	0.1	0.5	0.0
					535	0.2	0.1	0.4	0.1	0.5	0.0
					534	0.2	0.1	0.4	0.2	0.7	0.0
			SY (RS)		526	0.4	0.4	0.2	0.4	0.2	0.0
					527	0.4	0.4	1.7	0.1	0.1	0.0
					535	0.4	0.4	1.7	0.1	0.1	0.0
					534	0.4	0.4	0.2	0.4	0.2	0.0
			RC ENV~1	Max	526	0.8	0.2	0.8	1.8	-0.5	0.0
					527	0.1	0.2	2.9	0.7	1.0	0.0
					535	0.2	0.7	1.5	-0.5	1.6	0.0
					534	0.8	0.6	5.6	0.2	-0.2	0.0
				Min	526	-0.2	-0.7	-1.4	0.0	-2.1	0.0
					527	-0.8	-0.6	-1.1	0.1	-0.3	0.0
					535	-0.8	-0.2	-3.1	-2.2	0.3	0.0
					534	-0.2	-0.2	1.9	-0.6	-1.5	0.0
			RC ENV~2	Max	526	0.6	-0.2	0.5	1.2	-1.1	0.0
					527	-0.1	-0.2	2.0	0.5	0.5	0.0
					535	-0.1	0.4	-0.3	-0.6	1.1	0.0
					534	0.6	0.4	4.0	-0.2	-0.5	0.0
				Min	526	0.1	-0.4	-0.8	0.4	-1.5	0.0
					527	-0.6	-0.4	0.6	0.2	-0.1	0.0
					535	-0.6	0.2	-2.0	-1.5	0.5	0.0
					534	0.1	0.2	2.3	-0.4	-0.9	0.0
491	1	1	SX (RS)		527	0.0	0.1	0.8	0.1	0.4	0.0
					528	0.0	0.0	0.8	0.0	0.0	0.0
					536	0.0	0.0	0.8	0.0	0.0	0.0
					535	0.0	0.1	0.8	0.1	0.4	0.0
			SY (RS)		527	0.2	0.2	0.8	0.4	0.1	0.0
					528	0.1	0.2	1.5	0.3	0.0	0.0
					536	0.1	0.2	1.5	0.3	0.0	0.0
					535	0.2	0.2	0.8	0.4	0.1	0.0
			RC ENV~1	Max	527	0.8	-0.1	0.9	2.3	-0.3	0.0
					528	-0.1	-0.1	3.6	1.1	0.2	0.0
					536	-0.1	0.6	1.4	-0.5	1.0	0.0
					535	0.8	0.6	5.1	-0.0	0.6	0.0
				Min	527	0.1	-0.6	-1.8	0.2	-1.3	0.0
					528	-0.8	-0.6	-0.5	0.1	-1.1	0.0
					536	-0.8	0.1	-2.8	-2.5	-0.1	0.0
					535	0.1	0.1	1.3	-1.0	-0.8	0.0
			RC ENV~2	Max	527	0.6	-0.2	0.2	1.5	-0.3	0.0
					528	-0.2	-0.2	2.5	0.8	0.2	0.0
					536	-0.2	0.4	-0.1	-0.8	0.8	0.0
					535	0.6	0.4	3.6	-0.4	0.3	0.0
				Min	527	0.2	-0.4	-1.1	0.6	-1.0	0.0
					528	-0.6	-0.4	1.0	0.4	-0.7	0.0
					536	-0.6	0.2	-1.8	-1.7	0.0	0.0
					535	0.2	0.2	2.1	-0.7	-0.4	0.0
492	1	1	SX (RS)		167	0.2	0.4	0.2	0.2	0.7	0.0
					529	0.4	0.4	0.2	0.3	1.2	0.0
					537	0.2	0.3	0.8	0.2	1.0	0.0
					170	0.4	0.4	0.7	0.4	1.1	0.0

			SY (RS)	167	0.5	0.3	1.2	0.3	0.2	0.0
				529	0.5	0.7	0.8	0.1	0.2	0.0
				537	0.5	0.3	0.7	0.7	0.2	0.0
				170	0.5	0.8	1.4	0.5	0.3	0.0
		RC ENV~1	Max	167	0.6	0.2	0.5	0.4	2.6	0.0
				529	0.3	0.6	5.3	0.3	0.5	0.0
				537	0.4	0.5	3.3	0.9	0.3	0.0
				170	0.9	0.8	0.1	0.8	3.5	0.0
			Min	167	-0.4	-0.6	-2.6	-0.4	1.0	0.0
				529	-0.8	-0.8	1.8	-0.4	-1.8	0.0
				537	-0.7	-0.2	1.8	-0.5	-1.8	0.0
				170	-0.2	-0.7	-2.8	-0.3	0.7	0.0
		RC ENV~2	Max	167	0.2	-0.1	-0.6	0.3	2.0	0.0
				529	0.0	0.1	3.8	0.0	-0.2	0.0
				537	-0.0	0.3	2.6	0.2	-0.1	0.0
				170	0.6	0.1	-0.5	0.4	2.5	0.0
			Min	167	0.1	-0.3	-1.8	-0.1	1.2	0.0
				529	-0.5	-0.2	2.6	-0.1	-1.3	0.0
				537	-0.3	0.1	1.6	-0.2	-1.1	0.0
				170	-0.0	-0.0	-1.4	0.0	1.3	0.0
493	1	1	SX (RS)	529	0.2	0.3	0.3	0.2	1.1	0.0
				530	0.4	0.3	0.3	0.2	1.2	0.0
				538	0.2	0.3	0.4	0.2	1.2	0.0
				537	0.4	0.3	0.1	0.3	1.2	0.0
			SY (RS)	529	0.6	0.5	1.0	0.3	0.2	0.0
				530	0.7	0.7	0.5	0.1	0.2	0.0
				538	0.6	0.5	0.4	0.6	0.0	0.0
				537	0.7	0.8	1.3	0.4	0.2	0.0
		RC ENV~1	Max	529	0.8	0.3	0.6	0.6	1.8	0.0
				530	0.4	0.6	4.8	0.2	1.6	0.0
				538	0.5	0.7	3.1	0.7	1.5	0.0
				537	0.9	0.9	0.0	0.4	1.8	0.0
			Min	529	-0.5	-0.6	-2.5	-0.4	-0.4	0.0
				530	-0.9	-0.8	1.6	-0.2	-0.8	0.0
				538	-0.8	-0.3	2.3	-0.6	-1.0	0.0
				537	-0.4	-0.7	-2.7	-0.5	-0.6	0.0
		RC ENV~2	Max	529	0.3	-0.1	-0.3	0.3	1.1	0.0
				530	0.0	0.0	3.4	0.1	0.8	0.0
				538	-0.1	0.3	2.8	0.2	1.0	0.0
				537	0.6	0.2	-0.3	0.1	1.2	0.0
			Min	529	0.1	-0.3	-1.7	-0.1	0.0	0.0
				530	-0.6	-0.2	2.1	-0.0	-0.1	0.0
				538	-0.3	0.1	1.9	-0.4	-0.0	0.0
				537	-0.0	-0.1	-1.6	-0.1	0.1	0.0
494	1	1	SX (RS)	530	0.3	0.2	0.3	0.2	1.2	0.0
				531	0.5	0.2	0.4	0.2	1.0	0.0
				539	0.3	0.2	0.4	0.3	1.0	0.0
				538	0.5	0.2	0.7	0.2	1.2	0.0
			SY (RS)	530	0.6	0.6	0.6	0.2	0.1	0.0
				531	0.7	0.6	0.3	0.1	0.1	0.0
				539	0.5	0.6	0.1	0.4	0.0	0.0
				538	0.8	0.6	0.8	0.4	0.1	0.0
		RC ENV~1	Max	530	0.8	0.4	0.3	0.7	0.8	0.0
				531	0.4	0.5	4.4	0.1	2.1	0.0
				539	0.3	0.8	2.8	0.4	2.7	0.0
				538	1.1	0.7	1.2	0.3	0.7	0.0

				Min	530	-0.4	-0.8	-2.5	-0.3	-1.6	0.0
					531	-1.0	-0.7	1.4	-0.2	0.2	0.0
					539	-0.8	-0.4	1.4	-0.9	0.1	0.0
					538	-0.4	-0.5	-1.4	-0.4	-1.6	0.0
			RC ENV~2	Max	530	0.5	-0.1	-0.3	0.4	-0.1	0.0
					531	0.0	-0.0	3.1	0.0	1.5	0.0
					539	-0.1	0.4	2.5	0.1	1.9	0.0
					538	0.8	0.2	0.7	0.1	-0.0	0.0
				Min	530	0.1	-0.3	-1.7	-0.1	-1.1	0.0
					531	-0.7	-0.2	1.7	-0.1	0.9	0.0
					539	-0.5	0.1	1.3	-0.5	1.1	0.0
					538	-0.0	-0.0	-1.0	-0.1	-0.9	0.0
495	1	1	SX (RS)		531	0.4	0.2	0.3	0.2	1.0	0.0
					532	0.4	0.1	0.4	0.2	0.8	0.0
					540	0.4	0.2	0.6	0.3	0.8	0.0
					539	0.4	0.1	0.7	0.2	0.9	0.0
			SY (RS)		531	0.5	0.6	0.4	0.2	0.0	0.0
					532	0.6	0.5	0.2	0.1	0.1	0.0
					540	0.5	0.6	0.2	0.3	0.0	0.0
					539	0.6	0.5	0.4	0.3	0.1	0.0
			RC ENV~1	Max	531	0.8	0.4	0.1	0.9	-0.2	0.0
					532	0.3	0.3	4.1	0.1	2.3	0.0
					540	0.2	0.8	2.1	0.2	3.4	0.0
					539	1.0	0.7	2.9	0.3	-0.2	0.0
				Min	531	-0.3	-0.8	-2.5	-0.2	-2.7	0.0
					532	-1.0	-0.7	1.0	-0.3	0.7	0.0
					540	-0.9	-0.4	-0.1	-1.1	0.9	0.0
					539	-0.3	-0.3	-0.2	-0.3	-2.1	0.0
			RC ENV~2	Max	531	0.6	-0.2	-0.2	0.6	-1.1	0.0
					532	-0.0	-0.2	2.8	-0.0	1.7	0.0
					540	-0.1	0.4	1.5	-0.1	2.4	0.0
					539	0.7	0.3	1.9	0.1	-0.9	0.0
				Min	531	0.1	-0.4	-1.7	-0.0	-1.9	0.0
					532	-0.7	-0.3	1.4	-0.2	1.4	0.0
					540	-0.6	0.2	0.2	-0.8	1.6	0.0
					539	0.0	0.2	0.4	-0.1	-1.5	0.0
496	1	1	SX (RS)		532	0.4	0.2	0.4	0.2	0.8	0.0
					533	0.3	0.0	0.4	0.2	0.7	0.0
					541	0.4	0.2	0.8	0.2	0.6	0.0
					540	0.3	0.0	0.6	0.2	0.8	0.0
			SY (RS)		532	0.5	0.5	0.2	0.1	0.1	0.0
					533	0.5	0.5	0.4	0.2	0.0	0.0
					541	0.5	0.5	0.6	0.4	0.1	0.0
					540	0.6	0.5	0.2	0.4	0.1	0.0
			RC ENV~1	Max	532	0.9	0.3	0.3	1.2	-0.9	0.0
					533	0.3	0.2	4.0	0.2	2.1	0.0
					541	0.2	0.8	1.1	0.1	3.3	0.0
					540	0.9	0.7	4.6	0.4	-0.7	0.0
				Min	532	-0.2	-0.8	-2.4	-0.0	-3.3	0.0
					533	-0.9	-0.7	0.8	-0.3	0.7	0.0
					541	-0.9	-0.3	-2.2	-1.4	1.1	0.0
					540	-0.3	-0.2	1.0	-0.4	-2.3	0.0
			RC ENV~2	Max	532	0.6	-0.2	-0.0	0.8	-1.6	0.0
					533	-0.1	-0.2	2.7	0.0	1.5	0.0
					541	-0.1	0.4	0.4	-0.2	2.4	0.0
					540	0.7	0.4	3.2	0.2	-1.3	0.0

				Min	532	0.1	-0.4	-1.5	0.1	-2.4	0.0
					533	-0.7	-0.4	1.2	-0.2	1.3	0.0
					541	-0.6	0.2	-1.4	-0.9	1.8	0.0
					540	0.1	0.2	1.5	-0.1	-1.7	0.0
497	1	1	SX (RS)		533	0.4	0.3	0.4	0.2	0.7	0.0
					534	0.2	0.0	0.5	0.2	0.7	0.0
					542	0.4	0.3	0.9	0.1	0.7	0.0
					541	0.2	0.0	0.5	0.2	0.7	0.0
			SY (RS)		533	0.6	0.5	0.3	0.1	0.2	0.0
					534	0.5	0.4	0.9	0.3	0.1	0.0
					542	0.6	0.6	1.3	0.5	0.1	0.0
					541	0.5	0.5	0.2	0.6	0.0	0.0
			RC ENV~1	Max	533	0.9	0.3	0.6	1.6	-1.1	0.0
					534	0.2	0.2	4.3	0.4	1.7	0.0
					542	0.3	0.8	0.4	0.1	2.8	0.0
					541	0.9	0.7	6.2	0.6	-0.6	0.0
				Min	533	-0.3	-0.8	-2.0	0.2	-3.2	0.0
					534	-0.9	-0.7	0.6	-0.3	0.3	0.0
					542	-0.9	-0.3	-4.7	-1.7	0.8	0.0
					541	-0.2	-0.2	2.0	-0.5	-2.1	0.0
			RC ENV~2	Max	533	0.6	-0.2	0.3	1.1	-1.7	0.0
					534	-0.1	-0.2	3.0	0.1	1.0	0.0
					542	-0.1	0.4	-0.9	-0.4	2.0	0.0
					541	0.6	0.4	4.4	0.3	-1.3	0.0
				Min	533	0.1	-0.4	-1.3	0.3	-2.3	0.0
					534	-0.6	-0.4	1.4	-0.1	0.6	0.0
					542	-0.6	0.2	-3.2	-1.1	1.5	0.0
					541	0.1	0.2	2.5	0.0	-1.4	0.0
498	1	1	SX (RS)		534	0.3	0.3	0.4	0.2	0.7	0.0
					535	0.1	0.0	0.5	0.2	0.5	0.0
					543	0.3	0.3	0.3	0.1	0.6	0.0
					542	0.1	0.0	0.6	0.1	0.8	0.0
			SY (RS)		534	0.5	0.6	0.6	0.1	0.1	0.0
					535	0.5	0.2	1.4	0.4	0.3	0.0
					543	0.4	0.7	2.2	0.7	0.1	0.0
					542	0.5	0.3	0.2	0.9	0.1	0.0
			RC ENV~1	Max	534	0.8	0.4	1.0	2.2	-0.7	0.0
					535	0.2	-0.0	5.2	0.6	0.8	0.0
					543	0.2	0.9	0.4	0.1	1.8	0.0
					542	0.8	0.6	6.8	1.0	-0.1	0.0
				Min	534	-0.2	-0.9	-1.6	0.4	-2.5	0.0
					535	-0.8	-0.6	0.4	-0.2	-0.7	0.0
					543	-0.8	-0.5	-6.6	-2.0	0.3	0.0
					542	-0.3	-0.0	2.2	-0.8	-1.6	0.0
			RC ENV~2	Max	534	0.6	-0.2	0.5	1.5	-1.3	0.0
					535	-0.1	-0.2	3.6	0.4	0.3	0.0
					543	-0.2	0.4	-1.8	-0.5	1.3	0.0
					542	0.6	0.4	4.8	0.4	-0.4	0.0
				Min	534	0.2	-0.4	-1.0	0.6	-1.9	0.0
					535	-0.6	-0.4	1.8	0.2	-0.4	0.0
					543	-0.6	0.2	-4.5	-1.4	0.6	0.0
					542	0.1	0.2	2.8	0.0	-0.8	0.0
499	1	1	SX (RS)		535	0.2	0.2	0.4	0.0	0.6	0.0
					536	0.1	0.1	0.4	0.2	0.0	0.0
					544	0.2	0.2	0.8	0.1	0.5	0.0
					543	0.1	0.0	0.9	0.2	0.4	0.0

			SY (RS)	535	0.1	0.6	1.1	0.1	0.1	0.0
				536	0.3	0.2	1.5	0.3	0.4	0.0
				544	0.1	0.6	2.0	0.8	0.4	0.0
				543	0.3	0.2	0.7	1.0	0.4	0.0
		RC ENV~1	Max	535	0.8	0.3	1.7	2.6	-0.2	0.0
				536	0.0	0.0	6.0	1.1	0.4	0.0
				544	-0.0	0.8	0.4	0.2	0.9	0.0
				543	0.8	0.6	5.1	1.0	1.1	0.0
			Min	535	0.1	-0.8	-1.2	0.7	-1.5	0.0
				536	-0.8	-0.6	0.6	0.2	-1.5	0.0
				544	-0.8	-0.4	-6.1	-2.1	-0.4	0.0
				543	-0.1	0.0	1.0	-1.0	-0.6	0.0
		RC ENV~2	Max	535	0.6	-0.2	0.7	1.8	-0.4	0.0
				536	-0.1	-0.2	4.2	0.8	0.0	0.0
				544	-0.2	0.4	-1.5	-0.6	0.6	0.0
				543	0.6	0.4	3.6	0.2	0.7	0.0
			Min	535	0.2	-0.4	-0.7	0.8	-1.1	0.0
				536	-0.6	-0.4	2.1	0.4	-1.0	0.0
				544	-0.6	0.2	-4.2	-1.4	-0.2	0.0
				543	0.1	0.2	1.9	-0.2	-0.2	0.0
500	1	1	SX (RS)	170	0.2	0.5	1.6	0.1	0.3	0.0
				537	0.5	0.4	0.5	0.3	1.6	0.0
				545	0.2	0.4	5.0	0.5	1.6	0.0
				173	0.4	0.4	3.8	0.4	0.4	0.0
			SY (RS)	170	0.7	0.4	1.1	0.6	0.6	0.0
				537	0.6	1.2	1.6	0.5	0.3	0.0
				545	0.8	0.2	1.5	1.2	0.1	0.0
				173	0.5	1.4	3.2	1.3	0.6	0.0
		RC ENV~1	Max	170	0.8	0.2	2.4	0.5	2.7	0.0
				537	0.3	1.2	5.7	0.5	0.8	0.0
				545	0.8	0.6	5.9	2.0	0.4	0.0
				173	0.9	1.4	2.4	1.7	2.1	0.0
			Min	170	-0.7	-0.7	-1.6	-0.8	1.3	0.0
				537	-1.0	-1.2	1.3	-0.5	-2.4	0.0
				545	-0.8	-0.2	-4.1	-0.4	-2.7	0.0
				173	-0.3	-1.3	-5.2	-0.8	0.8	0.0
		RC ENV~2	Max	170	0.1	-0.0	1.8	0.2	2.1	0.0
				537	0.1	0.2	4.1	0.1	-0.1	0.0
				545	0.1	0.4	2.7	1.2	-0.2	0.0
				173	0.6	0.2	0.2	0.9	1.6	0.0
			Min	170	0.0	-0.5	-0.9	-0.2	1.4	0.0
				537	-0.7	-0.2	2.9	-0.0	-1.7	0.0
				545	-0.1	0.1	-2.3	0.2	-2.0	0.0
				173	-0.0	-0.1	-2.1	0.2	1.5	0.0
501	1	1	SX (RS)	537	0.2	0.4	1.1	0.1	1.4	0.0
				538	0.8	0.4	1.0	0.2	1.2	0.0
				546	0.3	0.4	0.1	0.6	1.3	0.0
				545	1.0	0.5	1.9	0.7	1.7	0.0
			SY (RS)	537	0.7	0.5	0.3	0.6	0.2	0.0
				538	0.9	0.9	0.9	0.5	0.2	0.0
				546	0.5	0.6	0.6	0.7	0.1	0.0
				545	1.0	1.0	1.3	0.9	0.4	0.0
		RC ENV~1	Max	537	0.8	0.2	1.4	0.4	2.4	0.0
				538	0.5	0.8	6.1	0.5	1.8	0.0
				546	0.3	0.9	4.8	1.3	1.7	0.0

					545	2.0	1.0	-1.4	1.4	2.4	0.0
				Min	537	-0.5	-0.7	-2.0	-0.8	-0.5	0.0
					538	-1.6	-0.9	1.7	-0.4	-0.7	0.0
					546	-0.8	-0.3	3.0	-0.3	-1.0	0.0
					545	-0.6	-1.1	-7.4	-0.5	-0.9	0.0
			RC ENV~2	Max	537	0.3	-0.1	0.7	0.2	1.6	0.0
					538	0.1	0.2	4.3	0.1	1.1	0.0
					546	-0.0	0.6	3.7	1.0	1.2	0.0
					545	1.4	0.3	-1.5	1.0	1.7	0.0
				Min	537	0.1	-0.5	-1.2	-0.2	0.1	0.0
					538	-1.2	-0.3	2.5	0.0	0.2	0.0
					546	-0.5	0.0	2.7	-0.1	0.1	0.0
					545	-0.2	-0.4	-5.4	-0.0	0.1	0.0
502	1	1	SX (RS)		538	0.4	0.3	0.4	0.3	1.3	0.0
					539	0.6	0.1	0.6	0.2	0.9	0.0
					547	0.4	0.3	0.6	0.5	1.0	0.0
					546	0.7	0.1	1.2	0.4	1.2	0.0
			SY (RS)		538	0.5	0.6	0.3	0.4	0.1	0.0
					539	0.7	0.5	0.4	0.4	0.1	0.0
					547	0.4	0.6	0.2	0.4	0.1	0.0
					546	0.8	0.5	0.2	0.5	0.2	0.0
			RC ENV~1	Max	538	0.8	0.4	-0.0	0.6	0.9	0.0
					539	0.4	0.3	4.5	0.4	2.4	0.0
					547	0.2	0.9	3.8	0.5	3.0	0.0
					546	1.4	0.7	1.0	0.5	0.6	0.0
				Min	538	-0.2	-0.9	-2.6	-0.6	-1.7	0.0
					539	-1.3	-0.7	1.2	-0.4	0.5	0.0
					547	-0.9	-0.4	1.8	-0.9	0.3	0.0
					546	-0.4	-0.3	-2.4	-0.5	-1.8	0.0
			RC ENV~2	Max	538	0.6	-0.1	-0.3	0.4	-0.1	0.0
					539	0.1	-0.1	3.2	0.1	1.8	0.0
					547	-0.0	0.5	3.0	0.3	2.2	0.0
					546	1.0	0.3	0.4	0.3	-0.2	0.0
				Min	538	0.1	-0.5	-1.7	-0.2	-1.2	0.0
					539	-0.9	-0.3	1.7	-0.2	1.2	0.0
					547	-0.7	0.1	1.7	-0.6	1.3	0.0
					546	-0.1	0.1	-1.8	-0.2	-1.1	0.0
503	1	1	SX (RS)		539	0.5	0.2	0.4	0.3	1.0	0.0
					540	0.5	0.0	0.5	0.2	0.7	0.0
					548	0.5	0.2	0.6	0.3	0.8	0.0
					547	0.5	0.0	0.8	0.3	0.9	0.0
			SY (RS)		539	0.4	0.6	0.3	0.3	0.1	0.0
					540	0.6	0.4	0.3	0.3	0.1	0.0
					548	0.4	0.6	0.2	0.4	0.0	0.0
					547	0.6	0.4	0.2	0.4	0.1	0.0
			RC ENV~1	Max	539	0.9	0.3	-0.1	0.9	-0.3	0.0
					540	0.3	0.2	4.0	0.3	2.7	0.0
					548	0.2	0.8	2.3	0.2	3.7	0.0
					547	1.1	0.6	3.1	0.3	-0.4	0.0
				Min	539	-0.2	-0.8	-2.7	-0.3	-3.0	0.0
					540	-1.1	-0.7	0.9	-0.4	1.0	0.0
					548	-0.9	-0.3	0.0	-1.3	1.1	0.0
					547	-0.3	-0.2	-0.2	-0.5	-2.4	0.0
			RC ENV~2	Max	539	0.6	-0.1	-0.4	0.6	-1.3	0.0
					540	0.0	-0.2	2.8	0.0	2.0	0.0
					548	-0.1	0.4	1.8	-0.2	2.7	0.0

					547	0.8	0.3	2.1	0.2	-1.2	0.0
				Min	539	0.1	-0.4	-1.8	-0.0	-2.2	0.0
					540	-0.8	-0.3	1.3	-0.3	1.6	0.0
					548	-0.7	0.1	0.3	-0.8	1.8	0.0
					547	-0.0	0.2	0.4	-0.2	-1.8	0.0
504	1	1	SX (RS)		540	0.5	0.2	0.5	0.2	0.8	0.0
					541	0.4	0.1	0.4	0.2	0.7	0.0
					549	0.5	0.2	0.9	0.3	0.6	0.0
					548	0.4	0.1	0.7	0.3	0.7	0.0
			SY (RS)		540	0.4	0.5	0.4	0.4	0.1	0.0
					541	0.5	0.4	0.2	0.4	0.1	0.0
					549	0.4	0.5	0.2	0.5	0.0	0.0
					548	0.5	0.4	0.1	0.4	0.1	0.0
			RC ENV~1	Max	540	0.9	0.3	0.2	1.2	-1.1	0.0
					541	0.2	0.1	4.0	0.3	2.2	0.0
					549	0.2	0.8	1.3	0.2	3.7	0.0
					548	1.0	0.6	5.1	0.4	-0.9	0.0
				Min	540	-0.2	-0.8	-2.6	-0.2	-3.7	0.0
					541	-0.9	-0.6	0.8	-0.6	0.9	0.0
					549	-0.9	-0.3	-2.5	-1.4	1.4	0.0
					548	-0.3	-0.2	1.2	-0.5	-2.7	0.0
			RC ENV~2	Max	540	0.6	-0.2	-0.2	0.8	-1.8	0.0
					541	-0.0	-0.2	2.7	-0.1	1.6	0.0
					549	-0.1	0.4	0.5	-0.3	2.7	0.0
					548	0.7	0.4	3.5	0.3	-1.6	0.0
				Min	540	0.1	-0.4	-1.7	0.1	-2.7	0.0
					541	-0.7	-0.4	1.1	-0.4	1.5	0.0
					549	-0.6	0.2	-1.5	-1.0	2.0	0.0
					548	0.0	0.2	1.8	-0.1	-2.0	0.0
505	1	1	SX (RS)		541	0.6	0.2	0.6	0.2	0.6	0.0
					542	0.2	0.2	0.5	0.2	0.8	0.0
					550	0.6	0.2	1.5	0.2	0.7	0.0
					549	0.3	0.2	0.7	0.4	0.7	0.0
			SY (RS)		541	0.5	0.5	0.4	0.5	0.1	0.0
					542	0.4	0.4	0.3	0.6	0.0	0.0
					550	0.5	0.5	0.2	0.7	0.0	0.0
					549	0.5	0.4	0.1	0.6	0.2	0.0
			RC ENV~1	Max	541	0.9	0.3	0.7	1.5	-1.4	0.0
					542	0.2	0.2	4.6	0.4	1.9	0.0
					550	0.3	0.7	0.2	0.4	3.2	0.0
					549	0.9	0.6	7.2	1.0	-0.9	0.0
				Min	541	-0.3	-0.7	-2.2	-0.2	-3.8	0.0
					542	-0.9	-0.7	0.9	-0.9	0.2	0.0
					550	-0.9	-0.2	-5.9	-1.3	1.0	0.0
					549	-0.2	-0.1	2.2	-0.4	-2.2	0.0
			RC ENV~2	Max	541	0.6	-0.2	0.2	1.0	-2.0	0.0
					542	-0.1	-0.2	3.2	-0.2	1.0	0.0
					550	-0.2	0.4	-1.2	-0.2	2.3	0.0
					549	0.6	0.4	5.1	0.7	-1.5	0.0
				Min	541	0.2	-0.4	-1.4	0.3	-2.7	0.0
					542	-0.6	-0.4	1.4	-0.6	0.7	0.0
					550	-0.6	0.2	-4.0	-0.9	1.7	0.0
					549	0.1	0.2	2.9	0.1	-1.7	0.0
506	1	1	SX (RS)		542	0.7	0.5	1.2	0.2	0.7	0.0
					543	0.2	0.2	1.5	0.2	0.9	0.0
					551	0.9	0.6	2.5	0.6	1.2	0.0

					550	0.1	0.3	0.3	0.5	0.9	0.0
				SY (RS)	542	0.7	0.8	1.3	0.7	0.2	0.0
					543	0.6	0.2	0.2	1.0	0.5	0.0
					551	0.8	1.0	2.6	1.4	0.6	0.0
					550	0.5	0.4	1.0	1.1	0.2	0.0
			RC ENV~1	Max	542	1.0	0.6	2.1	2.0	-0.9	0.0
					543	0.3	-0.1	6.9	0.8	1.0	0.0
					551	0.6	1.3	-1.4	1.3	2.1	0.0
					550	0.8	0.6	8.9	2.0	-0.1	0.0
				Min	542	-0.4	-1.0	-1.2	-0.2	-3.1	0.0
					543	-0.8	-0.6	0.9	-1.1	-1.5	0.0
					551	-1.1	-0.8	-11.3	-1.5	-0.3	0.0
					550	-0.2	-0.1	2.8	-0.5	-1.9	0.0
			RC ENV~2	Max	542	0.6	-0.1	1.0	1.3	-1.7	0.0
					543	-0.1	-0.2	4.8	-0.1	0.1	0.0
					551	-0.3	0.4	-3.9	0.1	1.3	0.0
					550	0.6	0.4	6.3	1.4	-0.6	0.0
				Min	542	0.2	-0.4	-0.6	0.5	-2.3	0.0
					543	-0.6	-0.4	2.4	-0.5	-1.0	0.0
					551	-0.5	0.1	-7.9	-0.7	0.5	0.0
					550	0.1	0.2	3.8	0.6	-1.0	0.0
507	1	1		SX (RS)	543	0.3	0.4	0.7	0.1	1.1	0.0
					544	0.3	0.2	2.3	0.3	0.5	0.0
					552	0.2	0.3	4.8	0.2	1.4	0.0
					551	0.4	0.1	6.5	0.4	1.1	0.0
				SY (RS)	543	0.2	1.2	2.8	0.7	0.1	0.0
					544	0.6	0.7	2.0	0.8	1.0	0.0
					552	0.1	1.4	5.4	2.1	1.2	0.0
					551	0.7	0.5	0.6	2.0	0.1	0.0
			RC ENV~1	Max	543	0.8	1.0	4.4	2.4	0.3	0.0
					544	0.3	0.5	8.9	1.0	0.5	0.0
					552	-0.1	1.7	1.4	2.1	1.3	0.0
					551	0.9	0.7	8.6	2.9	2.1	0.0
				Min	543	-0.0	-1.4	-1.2	0.0	-1.8	0.0
					544	-0.8	-0.9	1.1	-0.6	-3.0	0.0
					552	-0.8	-1.2	-12.2	-2.1	-1.9	0.0
					551	-0.4	-0.2	-4.4	-1.2	-0.9	0.0
			RC ENV~2	Max	543	0.6	-0.1	2.1	1.7	-0.3	0.0
					544	-0.1	-0.2	6.3	0.3	-0.5	0.0
					552	-0.2	0.4	-3.7	0.2	0.2	0.0
					551	0.6	0.4	4.5	1.8	1.4	0.0
				Min	543	0.2	-0.4	0.5	0.8	-1.2	0.0
					544	-0.6	-0.4	3.3	0.1	-2.0	0.0
					552	-0.6	0.1	-8.5	-0.6	-1.3	0.0
					551	0.1	0.2	1.9	0.8	0.2	0.0
508	1	1		SX (RS)	173	0.2	0.9	1.9	0.2	1.8	0.0
					545	2.0	0.8	5.9	0.8	2.1	0.0
					553	1.2	1.0	3.4	1.0	1.9	0.0
					11	3.1	0.9	7.5	2.0	7.6	0.0
				SY (RS)	173	1.3	0.9	2.9	1.3	0.6	0.0
					545	1.5	2.0	4.7	1.3	0.6	0.0
					553	1.1	0.5	1.5	1.2	0.3	0.0
					11	1.8	3.3	5.8	5.2	2.1	0.0
			RC ENV~1	Max	173	1.4	0.5	3.2	0.9	6.9	0.0
					545	1.1	2.2	19.4	0.8	1.3	0.0

					553	0.6	2.0	14.2	4.4	1.1	0.0
					11	5.7	3.1	-4.7	7.8	16.0	0.0
				Min	173	-1.1	-1.7	-2.7	-1.6	1.6	0.0
					545	-3.7	-1.9	1.9	-1.8	-2.8	0.0
					553	-2.4	-0.5	3.9	0.6	-2.8	0.0
					11	-1.7	-3.5	-29.5	-2.6	-1.5	-0.0
			RC ENV~2	Max	173	0.3	0.1	0.5	0.0	5.0	0.0
					545	0.5	0.7	13.9	-0.1	0.2	0.0
					553	0.2	1.4	10.5	3.2	0.2	0.0
					11	4.0	0.4	-7.0	5.0	11.5	0.0
				Min	173	0.0	-1.2	-1.0	-0.4	2.2	0.0
					545	-2.6	-0.4	5.1	-1.1	-1.8	0.0
					553	-1.7	-0.2	5.1	0.8	-1.7	0.0
					11	-0.8	-0.9	-21.3	1.3	2.5	0.0
509	1	1	SX (RS)		545	0.7	0.6	0.9	0.4	2.0	0.0
					546	1.1	0.1	1.7	0.4	1.2	0.0
					554	0.8	0.5	1.0	1.0	1.2	0.0
					553	1.2	0.2	3.4	1.1	1.9	0.0
			SY (RS)		545	0.4	0.8	3.3	0.8	0.3	0.0
					546	0.9	0.5	0.7	0.8	0.2	0.0
					554	0.5	0.7	0.8	0.1	0.1	0.0
					553	0.9	0.4	2.6	0.4	0.4	0.0
			RC ENV~1	Max	545	1.5	0.5	2.2	0.2	3.1	0.0
					546	0.6	0.3	7.3	0.5	2.0	0.0
					554	0.4	1.0	7.2	1.7	2.2	0.0
					553	2.3	0.6	0.1	2.4	2.7	0.0
				Min	545	-0.3	-1.1	-4.4	-1.5	-0.8	0.0
					546	-2.1	-0.7	1.4	-1.1	-0.4	0.0
					554	-1.6	-0.4	3.5	-0.6	-0.5	0.0
					553	-0.6	-0.1	-8.3	-0.4	-1.1	0.0
			RC ENV~2	Max	545	1.0	0.0	-1.0	-0.1	2.1	0.0
					546	0.2	-0.2	5.2	-0.0	1.3	0.0
					554	0.1	0.7	5.4	1.2	1.5	0.0
					553	1.6	0.4	-1.1	1.7	1.8	0.0
				Min	545	-0.1	-0.8	-2.4	-1.1	0.0	0.0
					546	-1.5	-0.3	2.8	-0.7	0.5	0.0
					554	-1.1	0.0	3.4	-0.3	0.6	0.0
					553	-0.3	0.1	-6.0	0.0	-0.0	0.0
510	1	1	SX (RS)		546	0.6	0.3	0.6	0.6	1.3	0.0
					547	0.7	0.1	0.7	0.4	0.9	0.0
					555	0.6	0.3	0.7	0.5	0.9	0.0
					554	0.7	0.1	0.9	0.6	1.2	0.0
			SY (RS)		546	0.4	0.5	0.5	0.4	0.1	0.0
					547	0.7	0.5	0.6	0.5	0.2	0.0
					555	0.4	0.5	0.4	0.4	0.1	0.0
					554	0.7	0.5	0.3	0.6	0.3	0.0
			RC ENV~1	Max	546	1.2	0.3	-0.8	0.6	0.7	0.0
					547	0.3	0.2	4.6	0.4	2.7	0.0
					555	0.2	0.8	4.5	0.3	3.5	0.0
					554	1.4	0.7	1.6	0.7	0.5	0.0
				Min	546	-0.2	-0.8	-4.0	-0.8	-2.1	0.0
					547	-1.4	-0.7	0.9	-0.7	0.7	0.0
					555	-1.3	-0.3	2.3	-1.3	0.7	0.0
					554	-0.3	-0.2	-1.2	-0.8	-1.9	0.0
			RC ENV~2	Max	546	0.9	-0.1	-1.3	0.4	-0.3	0.0
					547	0.1	-0.2	3.2	0.2	2.0	0.0

					555	0.0	0.5	3.5	0.0	2.5	0.0
					554	1.0	0.4	0.9	0.4	-0.3	0.0
				Min	546	-0.0	-0.5	-2.8	-0.6	-1.4	0.0
					547	-1.0	-0.4	1.6	-0.5	1.4	0.0
					555	-0.9	0.1	2.0	-0.9	1.6	0.0
					554	-0.1	0.2	-0.8	-0.4	-1.2	0.0
511	1	1	SX (RS)		547	0.5	0.2	0.6	0.4	1.0	0.0
					548	0.5	0.1	0.7	0.3	0.7	0.0
					556	0.5	0.2	0.5	0.4	0.7	0.0
					555	0.5	0.1	0.6	0.4	0.9	0.0
			SY (RS)		547	0.4	0.5	0.5	0.4	0.0	0.0
					548	0.6	0.4	0.4	0.4	0.1	0.0
					556	0.4	0.5	0.3	0.4	0.0	0.0
					555	0.6	0.4	0.3	0.4	0.2	0.0
			RC ENV~1	Max	547	1.1	0.3	-0.4	1.1	-0.6	0.0
					548	0.3	0.1	3.7	0.5	3.1	0.0
					556	0.2	0.8	2.6	-0.2	4.1	0.0
					555	1.1	0.6	3.5	0.1	-0.6	0.0
				Min	547	-0.2	-0.8	-3.5	-0.3	-3.4	0.0
					548	-1.0	-0.6	0.4	-0.5	1.2	0.0
					556	-1.1	-0.3	0.5	-1.6	1.4	0.0
					555	-0.3	-0.1	0.4	-0.8	-2.7	0.0
			RC ENV~2	Max	547	0.8	-0.1	-0.9	0.7	-1.5	0.0
					548	0.0	-0.2	2.5	0.2	2.3	0.0
					556	-0.0	0.4	2.1	-0.4	3.0	0.0
					555	0.7	0.5	2.4	0.0	-1.3	0.0
				Min	547	0.0	-0.4	-2.4	-0.0	-2.4	0.0
					548	-0.7	-0.4	1.0	-0.3	1.8	0.0
					556	-0.8	0.1	0.7	-1.1	2.0	0.0
					555	-0.0	0.2	0.9	-0.6	-2.0	0.0
512	1	1	SX (RS)		548	0.6	0.2	0.7	0.3	0.7	0.0
					549	0.4	0.1	0.6	0.3	0.6	0.0
					557	0.6	0.2	0.7	0.3	0.6	0.0
					556	0.4	0.1	0.6	0.3	0.7	0.0
			SY (RS)		548	0.4	0.5	0.4	0.5	0.0	0.0
					549	0.5	0.3	0.7	0.4	0.1	0.0
					557	0.4	0.5	0.5	0.4	0.1	0.0
					556	0.5	0.3	0.2	0.4	0.2	0.0
			RC ENV~1	Max	548	0.9	0.3	0.2	1.2	-1.3	0.0
					549	0.2	0.1	3.2	0.4	2.6	0.0
					557	0.3	0.7	1.6	-0.2	4.0	0.0
					556	0.9	0.6	5.4	0.1	-1.2	0.0
				Min	548	-0.3	-0.7	-3.0	-0.2	-4.1	0.0
					549	-0.9	-0.6	-0.1	-0.7	1.2	0.0
					557	-0.9	-0.3	-1.6	-1.6	1.5	0.0
					556	-0.3	-0.1	1.6	-0.8	-3.1	0.0
			RC ENV~2	Max	548	0.7	-0.2	-0.4	0.8	-2.0	0.0
					549	-0.0	-0.2	2.2	0.0	2.0	0.0
					557	-0.1	0.4	0.9	-0.5	2.9	0.0
					556	0.6	0.5	3.8	-0.0	-1.8	0.0
				Min	548	0.1	-0.4	-2.0	0.2	-3.0	0.0
					549	-0.6	-0.4	0.5	-0.4	1.8	0.0
					557	-0.7	0.2	-0.9	-1.1	2.1	0.0
					556	0.0	0.2	2.1	-0.5	-2.3	0.0
513	1	1	SX (RS)		549	0.7	0.2	0.8	0.3	0.5	0.0
					550	0.4	0.2	0.6	0.5	0.8	0.0

					558	0.7	0.1	1.1	0.5	0.7	0.0
					557	0.4	0.2	0.8	0.5	0.6	0.0
				SY (RS)	549	0.4	0.5	0.8	0.7	0.1	0.0
					550	0.4	0.2	0.6	0.5	0.2	0.0
					558	0.4	0.5	0.4	1.0	0.2	0.0
					557	0.5	0.3	0.6	0.4	0.2	0.0
			RC ENV~1	Max	549	0.9	0.3	0.9	1.2	-1.6	0.0
					550	0.2	-0.0	3.1	0.2	2.1	0.0
					558	0.4	0.8	0.5	0.6	3.3	0.0
					557	0.8	0.6	7.6	0.7	-1.3	0.0
				Min	549	-0.4	-0.7	-2.2	-0.5	-4.2	0.0
					550	-0.8	-0.6	-0.3	-1.3	0.4	0.0
					558	-1.0	-0.3	-4.7	-1.4	1.1	0.0
					557	-0.2	-0.0	2.4	-0.6	-2.8	0.0
			RC ENV~2	Max	549	0.6	-0.2	0.3	0.8	-2.2	0.0
					550	-0.1	-0.2	2.0	-0.3	1.3	0.0
					558	-0.2	0.4	-0.5	-0.1	2.4	0.0
					557	0.5	0.4	5.4	0.4	-1.9	0.0
				Min	549	0.2	-0.4	-1.4	0.1	-3.0	0.0
					550	-0.6	-0.4	0.2	-0.9	1.0	0.0
					558	-0.6	0.2	-3.1	-0.8	1.7	0.0
					557	0.1	0.2	3.2	-0.2	-2.1	0.0
514	1	1		SX (RS)	550	1.0	0.2	2.2	0.2	0.6	0.0
					551	0.4	0.5	1.3	0.2	1.6	0.0
					559	1.1	0.1	4.5	1.2	1.5	0.0
					558	0.5	0.4	1.2	1.0	0.7	0.0
				SY (RS)	550	0.5	0.4	0.3	1.3	0.1	0.0
					551	0.3	0.6	6.3	1.3	0.3	0.0
					559	0.4	0.3	4.8	0.9	0.2	0.0
					558	0.4	0.4	1.8	0.2	0.3	0.0
			RC ENV~1	Max	550	1.2	0.2	3.3	1.3	-1.3	0.0
					551	0.2	0.4	6.5	0.4	1.7	0.0
					559	0.8	0.6	2.0	1.5	2.4	0.0
					558	0.7	0.7	10.5	2.3	-0.7	0.0
				Min	550	-0.7	-0.6	-1.0	-1.3	-3.6	0.0
					551	-0.7	-0.9	-6.0	-2.8	-1.6	0.0
					559	-1.3	-0.0	-9.9	-0.8	-0.6	0.0
					558	-0.2	-0.1	2.8	-0.5	-2.2	0.0
			RC ENV~2	Max	550	0.5	-0.2	1.7	0.6	-1.9	0.0
					551	-0.2	-0.2	2.0	-0.9	0.1	0.0
					559	-0.3	0.4	-2.7	1.0	1.4	0.0
					558	0.5	0.4	7.5	1.6	-1.3	0.0
				Min	550	0.3	-0.4	-0.3	-0.2	-2.6	0.0
					551	-0.5	-0.5	0.2	-2.0	-1.0	0.0
					559	-0.5	0.2	-6.8	-0.1	0.5	0.0
					558	0.2	0.3	4.6	0.5	-1.5	0.0
515	1	1		SX (RS)	551	1.8	0.9	7.9	0.8	1.7	0.0
					552	0.2	0.8	2.4	0.4	1.4	0.0
					12	2.8	1.1	10.1	2.3	9.1	0.0
					559	0.9	0.9	4.6	1.0	1.6	0.0
				SY (RS)	551	1.2	2.3	8.2	2.2	0.7	0.0
					552	1.3	1.5	5.4	2.1	1.2	0.0
					12	1.4	3.9	11.2	9.6	2.5	0.0
					559	1.2	0.1	2.4	2.1	0.5	0.0
			RC ENV~1	Max	551	2.0	2.1	13.9	2.4	0.5	0.0

					552	1.1	1.3	13.8	1.7	-0.8	0.0
					12	2.5	4.1	-3.4	12.5	6.7	0.0
					559	1.4	1.2	14.8	6.7	1.0	0.0
				Min	551	-1.5	-2.5	-2.5	-2.0	-2.8	0.0
					552	-1.6	-1.7	0.1	-2.6	-6.7	0.0
					12	-3.1	-3.7	-36.2	-6.7	-11.4	-0.0
					559	-0.9	-0.7	2.1	0.5	-2.1	0.0
			RC ENV~2	Max	551	0.6	-0.0	9.5	0.9	-0.8	0.0
					552	-0.1	-0.1	9.8	-0.4	-2.2	0.0
					12	0.0	0.4	-14.4	5.4	-1.2	0.0
					559	0.4	0.5	10.6	4.8	0.3	0.0
				Min	551	0.1	-0.4	4.3	0.1	-1.7	0.0
					552	-0.5	-0.4	5.3	-1.2	-4.7	0.0
					12	-0.7	-0.0	-25.8	2.8	-5.5	-0.0
					559	0.2	0.2	6.5	2.5	-0.6	0.0
516	1	1	SX (RS)		498	1.1	0.1	4.5	1.2	1.5	0.0
					499	0.5	0.4	1.2	1.0	0.7	0.0
					561	1.0	0.2	2.2	0.2	0.6	0.0
					560	0.4	0.5	1.3	0.2	1.6	0.0
			SY (RS)		498	0.4	0.3	4.8	0.9	0.2	0.0
					499	0.4	0.4	1.8	0.2	0.3	0.0
					561	0.5	0.4	0.3	1.3	0.1	0.0
					560	0.3	0.6	6.3	1.3	0.3	0.0
			RC ENV~1	Max	498	1.3	0.0	1.8	-0.0	1.1	0.0
					499	0.3	0.1	6.8	-0.3	1.7	0.0
					561	0.7	0.6	4.5	1.8	2.2	0.0
					560	0.7	0.9	7.1	2.6	1.9	0.0
				Min	498	-0.8	-0.6	-8.1	-2.6	-1.9	0.0
					499	-0.7	-0.7	1.4	-2.7	0.3	0.0
					561	-1.2	-0.2	-0.1	-0.8	0.7	0.0
					560	-0.2	-0.4	-5.5	0.0	-1.4	0.0
			RC ENV~2	Max	498	0.6	-0.2	-2.7	-0.5	0.3	0.0
					499	-0.1	-0.2	4.9	-0.9	1.0	0.0
					561	-0.1	0.4	3.3	0.7	1.6	0.0
					560	0.5	0.5	1.4	1.9	1.3	0.0
				Min	498	0.1	-0.4	-5.8	-1.9	-0.8	0.0
					499	-0.5	-0.5	3.2	-2.0	0.9	0.0
					561	-0.6	0.2	1.4	-0.2	1.4	0.0
					560	0.1	0.2	0.7	0.9	0.1	0.0
517	1	1	SX (RS)		499	0.7	0.1	1.1	0.5	0.7	0.0
					500	0.4	0.2	0.8	0.5	0.6	0.0
					562	0.7	0.2	0.8	0.3	0.5	0.0
					561	0.4	0.2	0.6	0.5	0.8	0.0
			SY (RS)		499	0.4	0.5	0.4	1.0	0.2	0.0
					500	0.5	0.3	0.6	0.4	0.2	0.0
					562	0.4	0.5	0.8	0.7	0.1	0.0
					561	0.4	0.3	0.6	0.5	0.2	0.0
			RC ENV~1	Max	499	0.9	0.3	-0.1	0.4	-0.5	0.0
					500	0.2	0.0	4.1	-0.1	2.0	0.0
					562	0.4	0.7	2.3	0.9	2.6	0.0
					561	0.7	0.6	2.4	1.2	0.0	0.0
				Min	499	-0.4	-0.8	-3.4	-1.6	-1.9	0.0
					500	-0.7	-0.6	1.2	-1.2	0.7	0.0
					562	-0.9	-0.3	0.3	-0.9	1.0	0.0
					561	-0.2	0.0	0.5	0.0	-1.7	0.0
			RC ENV~2	Max	499	0.6	-0.2	-1.1	0.1	-1.1	0.0

				500	-0.2	-0.2	3.0	-0.2	1.5	0.0
				562	-0.2	0.4	1.7	0.3	1.9	0.0
				561	0.5	0.4	1.7	0.9	-0.6	0.0
			Min	499	0.2	-0.4	-2.4	-0.8	-1.4	0.0
				500	-0.5	-0.4	2.0	-0.9	1.3	0.0
				562	-0.6	0.2	0.7	-0.6	1.6	0.0
				561	0.2	0.2	0.9	0.1	-0.9	0.0
518	1	1	SX (RS)	500	0.6	0.2	0.7	0.3	0.6	0.0
				501	0.4	0.1	0.6	0.3	0.7	0.0
				563	0.5	0.2	0.7	0.3	0.7	0.0
				562	0.4	0.1	0.6	0.3	0.6	0.0
			SY (RS)	500	0.4	0.5	0.5	0.4	0.1	0.0
				501	0.5	0.3	0.2	0.4	0.2	0.0
				563	0.4	0.5	0.4	0.5	0.0	0.0
				562	0.5	0.3	0.7	0.4	0.1	0.0
		RC ENV~1	Max	500	0.8	0.2	0.7	0.7	-0.9	0.0
				501	0.3	0.1	2.2	0.4	2.3	0.0
				563	0.3	0.7	1.2	0.6	2.6	0.0
				562	0.8	0.6	2.7	0.8	-0.6	0.0
			Min	500	-0.3	-0.7	-1.0	-0.7	-2.3	0.0
				501	-0.8	-0.6	0.6	-0.8	0.6	0.0
				563	-0.8	-0.2	-0.2	-1.1	0.8	0.0
				562	-0.3	-0.1	0.7	-0.5	-1.9	0.0
		RC ENV~2	Max	500	0.6	-0.2	0.1	0.4	-1.5	0.0
				501	-0.2	-0.2	1.6	0.1	1.7	0.0
				563	-0.3	0.4	0.8	0.2	1.9	0.0
				562	0.5	0.4	2.0	0.5	-1.2	0.0
			Min	500	0.3	-0.4	-0.6	-0.4	-1.7	0.0
				501	-0.5	-0.4	1.2	-0.5	1.2	0.0
				563	-0.6	0.2	0.1	-0.6	1.5	0.0
				562	0.2	0.2	1.3	-0.2	-1.4	0.0
519	1	1	SX (RS)	501	0.5	0.2	0.5	0.4	0.7	0.0
				502	0.5	0.1	0.6	0.4	0.9	0.0
				564	0.5	0.2	0.6	0.4	1.0	0.0
				563	0.5	0.1	0.7	0.3	0.7	0.0
			SY (RS)	501	0.4	0.5	0.3	0.4	0.0	0.0
				502	0.6	0.4	0.3	0.4	0.2	0.0
				564	0.4	0.5	0.5	0.4	0.0	0.0
				563	0.6	0.4	0.4	0.4	0.1	0.0
		RC ENV~1	Max	501	0.9	0.3	1.5	0.8	-0.8	0.0
				502	0.3	0.1	0.9	0.5	1.9	0.0
				564	0.2	0.8	0.6	0.7	2.0	0.0
				563	0.9	0.6	3.2	0.7	-0.6	0.0
			Min	501	-0.2	-0.7	0.4	-0.7	-2.5	0.0
				502	-0.9	-0.6	-0.4	-0.9	0.0	0.0
				564	-0.9	-0.3	-0.6	-1.0	0.1	0.0
				563	-0.3	-0.1	1.3	-0.7	-2.3	0.0
		RC ENV~2	Max	501	0.6	-0.2	1.1	0.4	-1.5	0.0
				502	-0.2	-0.2	0.4	0.2	1.4	0.0
				564	-0.3	0.4	0.3	0.3	1.4	0.0
				563	0.6	0.4	2.4	0.4	-1.2	0.0
			Min	501	0.2	-0.4	0.6	-0.4	-1.8	0.0
				502	-0.6	-0.4	-0.1	-0.6	0.8	0.0
				564	-0.6	0.2	-0.3	-0.6	0.9	0.0
				563	0.2	0.2	1.8	-0.4	-1.7	0.0
520	1	1	SX (RS)	502	0.6	0.3	0.7	0.5	0.9	0.0

					503	0.7	0.1	0.9	0.6	1.2	0.0
					565	0.6	0.3	0.6	0.6	1.3	0.0
					564	0.7	0.1	0.7	0.4	0.9	0.0
				SY (RS)	502	0.4	0.5	0.4	0.4	0.1	0.0
					503	0.7	0.5	0.3	0.6	0.3	0.0
					565	0.4	0.5	0.5	0.4	0.1	0.0
					564	0.7	0.5	0.6	0.5	0.2	0.0
			RC ENV~1	Max	502	1.1	0.3	3.6	0.4	-0.2	0.0
					503	0.4	0.3	-0.1	0.2	1.4	0.0
					565	0.2	0.8	0.1	1.2	1.5	0.0
					564	1.1	0.7	4.3	0.9	-0.1	0.0
				Min	502	-0.2	-0.8	1.3	-1.1	-2.0	0.0
					503	-1.2	-0.8	-2.8	-1.4	-1.0	0.0
					565	-1.0	-0.2	-1.1	-0.5	-1.1	0.0
					564	-0.3	-0.2	1.9	-0.7	-2.0	0.0
			RC ENV~2	Max	502	0.8	-0.1	2.7	0.2	-1.0	0.0
					503	-0.1	-0.2	-0.8	-0.0	0.6	0.0
					565	-0.2	0.5	-0.2	0.7	0.6	0.0
					564	0.8	0.4	3.2	0.5	-0.9	0.0
				Min	502	0.2	-0.4	1.7	-0.7	-1.4	0.0
					503	-0.8	-0.4	-2.0	-0.9	-0.1	0.0
					565	-0.7	0.1	-0.7	-0.3	-0.2	0.0
					564	0.2	0.2	2.4	-0.4	-1.4	0.0
521	1	1		SX (RS)	503	0.8	0.5	1.0	1.0	1.2	0.0
					504	1.2	0.2	3.4	1.1	1.9	0.0
					566	0.7	0.6	0.9	0.4	2.0	0.0
					565	1.1	0.1	1.7	0.4	1.2	0.0
				SY (RS)	503	0.5	0.6	0.8	0.1	0.1	0.0
					504	0.9	0.4	2.6	0.4	0.4	0.0
					566	0.4	0.8	3.3	0.8	0.3	0.0
					565	0.9	0.5	0.7	0.8	0.2	0.0
			RC ENV~1	Max	503	1.3	0.3	6.3	-0.3	0.9	0.0
					504	0.6	0.2	-0.3	-0.4	0.7	0.0
					566	0.3	1.2	2.9	1.8	0.6	0.0
					565	1.7	0.7	7.4	1.5	0.8	0.0
				Min	503	-0.4	-1.0	2.3	-2.4	-1.5	0.0
					504	-1.8	-0.6	-9.5	-2.8	-3.2	0.0
					566	-1.2	-0.4	-3.8	0.2	-3.5	0.0
					565	-0.6	-0.3	2.3	-0.4	-1.5	0.0
			RC ENV~2	Max	503	0.9	-0.1	4.6	-0.5	-0.0	0.0
					504	-0.1	-0.1	-2.9	-0.6	-0.6	0.0
					566	-0.2	0.7	-0.1	1.2	-0.9	0.0
					565	1.2	0.3	5.4	0.8	-0.1	0.0
				Min	503	0.2	-0.6	3.1	-1.8	-0.7	0.0
					504	-1.3	-0.4	-6.8	-2.1	-2.1	0.0
					566	-0.8	0.1	-0.5	0.3	-2.5	0.0
					565	0.1	0.1	3.4	-0.1	-0.8	0.0
522	1	1		SX (RS)	504	1.2	1.0	3.4	1.0	1.9	0.0
					10	3.1	0.9	7.5	2.0	7.6	0.0
					212	0.2	0.9	1.9	0.2	1.8	0.0
					566	2.0	0.8	5.9	0.8	2.1	0.0
				SY (RS)	504	1.1	0.5	1.5	1.2	0.3	0.0
					10	1.8	3.3	5.8	5.2	2.1	0.0
					212	1.3	1.0	2.9	1.3	0.6	0.0
					566	1.5	2.1	4.7	1.3	0.6	0.0

			RC ENV~1	Max	504	1.9	0.5	13.0	-1.4	3.1	0.0
					10	1.7	3.6	-5.5	1.6	1.2	0.0
					212	1.1	1.4	4.1	1.9	-1.8	0.0
					566	3.0	1.9	19.8	2.2	3.2	0.0
				Min	504	-0.7	-1.6	2.6	-5.4	-0.8	0.0
					10	-4.6	-3.0	-31.9	-8.8	-15.8	-0.0
					212	-1.4	-0.5	-1.7	-0.6	-7.5	0.0
					566	-1.1	-2.2	3.0	-0.4	-0.9	0.0
			RC ENV~2	Max	504	1.3	-0.1	9.4	-2.0	2.0	0.0
					10	-0.1	0.8	-11.3	-2.7	-4.2	0.0
					212	-0.1	1.0	2.7	0.7	-3.1	0.0
					566	2.1	0.1	14.3	1.0	1.9	0.0
				Min	504	0.1	-1.2	5.2	-3.9	0.6	0.0
					10	-3.2	0.0	-22.8	-5.8	-11.4	0.0
					212	-0.2	0.0	1.2	0.0	-5.5	0.0
					566	0.1	-0.6	7.2	-0.0	0.5	0.0
523	1	1	SX (RS)		512	0.2	0.3	4.8	0.2	1.4	0.0
					560	0.4	0.1	6.5	0.4	1.1	0.0
					567	0.3	0.4	0.7	0.1	1.1	0.0
					520	0.3	0.2	2.3	0.3	0.5	0.0
			SY (RS)		512	0.1	1.4	5.4	2.1	1.2	0.0
					560	0.7	0.5	0.6	2.0	0.1	0.0
					567	0.2	1.2	2.8	0.7	0.1	0.0
					520	0.6	0.7	2.0	0.8	1.0	0.0
			RC ENV~1	Max	512	0.8	1.2	1.5	1.5	2.2	0.0
					560	0.5	0.2	7.5	0.8	0.7	0.0
					567	0.0	1.4	5.1	0.3	1.5	0.0
					520	0.8	0.9	7.8	0.8	2.6	0.0
				Min	512	0.1	-1.6	-10.0	-2.7	-1.0	0.0
					560	-0.9	-0.7	-5.4	-3.3	-2.3	0.0
					567	-0.8	-1.0	-0.5	-2.0	-0.7	0.0
					520	-0.3	-0.5	1.4	-0.9	-0.5	0.0
			RC ENV~2	Max	512	0.5	-0.2	-3.7	0.1	1.5	0.0
					560	-0.2	-0.2	2.6	-0.9	-0.3	0.0
					567	-0.2	0.4	3.1	-0.5	0.7	0.0
					520	0.5	0.4	5.6	0.0	1.8	0.0
				Min	512	0.2	-0.4	-7.1	-0.8	0.3	0.0
					560	-0.5	-0.4	0.3	-1.9	-1.5	0.0
					567	-0.6	0.2	1.7	-1.4	-0.2	0.0
					520	0.2	0.2	3.6	-0.5	0.6	0.0
524	1	1	SX (RS)		560	0.9	0.6	2.5	0.6	1.2	0.0
					561	0.1	0.3	0.3	0.5	0.9	0.0
					568	0.7	0.5	1.2	0.2	0.7	0.0
					567	0.2	0.2	1.5	0.2	0.9	0.0
			SY (RS)		560	0.8	1.0	2.6	1.4	0.6	0.0
					561	0.5	0.4	1.0	1.1	0.2	0.0
					568	0.7	0.8	1.3	0.7	0.2	0.0
					567	0.6	0.2	0.2	1.0	0.5	0.0
			RC ENV~1	Max	560	1.1	0.8	-1.5	1.0	0.7	0.0
					561	0.2	0.1	5.9	0.1	1.6	0.0
					568	0.4	1.0	2.9	0.4	2.0	0.0
					567	0.8	0.6	5.8	1.2	1.8	0.0
				Min	560	-0.6	-1.3	-10.5	-1.9	-1.7	0.0
					561	-0.7	-0.6	1.8	-2.1	-0.2	0.0
					568	-1.0	-0.6	0.2	-1.9	0.5	0.0
					567	-0.3	0.1	1.3	-0.7	-0.7	0.0

			RC ENV~2	Max	560	0.6	-0.1	-4.0	0.4	0.1	0.0
					561	-0.2	-0.2	4.3	-0.5	0.7	0.0
					568	-0.2	0.4	2.1	-0.3	1.5	0.0
					567	0.5	0.4	4.2	0.3	1.2	0.0
				Min	560	0.1	-0.4	-7.4	-0.6	-0.8	0.0
					561	-0.5	-0.5	2.9	-1.5	0.3	0.0
					568	-0.6	0.2	0.8	-1.3	1.2	0.0
					567	0.2	0.2	2.8	-0.2	0.1	0.0
525	1	1	SX (RS)		561	0.6	0.2	1.5	0.2	0.7	0.0
					562	0.3	0.2	0.7	0.4	0.7	0.0
					569	0.6	0.2	0.6	0.2	0.6	0.0
					568	0.2	0.2	0.5	0.2	0.8	0.0
			SY (RS)		561	0.5	0.5	0.2	0.7	0.0	0.0
					562	0.5	0.4	0.1	0.6	0.2	0.0
					569	0.5	0.5	0.4	0.5	0.1	0.0
					568	0.4	0.4	0.3	0.6	0.0	0.0
			RC ENV~1	Max	561	0.9	0.2	-0.2	1.1	-0.5	0.0
					562	0.2	0.1	4.3	0.2	1.8	0.0
					569	0.3	0.7	1.5	0.3	2.4	0.0
					568	0.7	0.7	3.7	1.0	0.2	0.0
				Min	561	-0.3	-0.7	-4.9	-0.9	-1.9	0.0
					562	-0.7	-0.7	1.4	-1.1	0.5	0.0
					569	-0.9	-0.2	0.2	-1.7	0.9	0.0
					568	-0.2	-0.2	1.4	-0.5	-1.5	0.0
			RC ENV~2	Max	561	0.6	-0.2	-1.6	0.6	-1.2	0.0
					562	-0.3	-0.2	3.1	0.0	1.2	0.0
					569	-0.2	0.4	1.1	-0.2	1.8	0.0
					568	0.5	0.4	2.7	0.4	-0.3	0.0
				Min	561	0.2	-0.4	-3.5	-0.3	-1.4	0.0
					562	-0.5	-0.4	2.1	-0.7	1.1	0.0
					569	-0.6	0.2	0.3	-1.1	1.5	0.0
					568	0.3	0.2	2.0	-0.3	-0.7	0.0
526	1	1	SX (RS)		562	0.5	0.2	0.9	0.3	0.6	0.0
					563	0.4	0.1	0.7	0.3	0.7	0.0
					570	0.5	0.2	0.5	0.2	0.8	0.0
					569	0.4	0.1	0.4	0.2	0.7	0.0
			SY (RS)		562	0.4	0.5	0.2	0.5	0.0	0.0
					563	0.5	0.4	0.1	0.4	0.1	0.0
					570	0.4	0.5	0.4	0.4	0.1	0.0
					569	0.5	0.4	0.2	0.4	0.1	0.0
			RC ENV~1	Max	562	0.8	0.3	0.6	1.2	-0.9	0.0
					563	0.3	0.2	2.4	0.7	2.0	0.0
					570	0.2	0.7	0.9	0.3	2.4	0.0
					569	0.8	0.7	3.1	0.6	-0.5	0.0
				Min	562	-0.2	-0.7	-1.7	-0.6	-2.3	0.0
					563	-0.8	-0.7	0.5	-0.8	0.5	0.0
					570	-0.8	-0.3	-0.0	-1.6	0.7	0.0
					569	-0.3	-0.2	1.4	-0.9	-1.8	0.0
			RC ENV~2	Max	562	0.5	-0.2	-0.2	0.8	-1.5	0.0
					563	-0.2	-0.2	1.7	0.4	1.5	0.0
					570	-0.3	0.4	0.7	-0.1	1.8	0.0
					569	0.6	0.4	2.3	0.2	-1.0	0.0
				Min	562	0.3	-0.4	-1.1	-0.1	-1.7	0.0
					563	-0.6	-0.4	1.1	-0.4	1.1	0.0
					570	-0.5	0.2	0.1	-1.0	1.4	0.0
					569	0.2	0.2	1.8	-0.5	-1.2	0.0

527	1	1	SX (RS)	563	0.5	0.2	0.6	0.3	0.8	0.0
				564	0.5	0.1	0.8	0.3	0.9	0.0
				571	0.4	0.2	0.4	0.3	1.0	0.0
				570	0.5	0.0	0.5	0.2	0.7	0.0
			SY (RS)	563	0.4	0.5	0.2	0.4	0.0	0.0
				564	0.6	0.5	0.2	0.4	0.1	0.0
				571	0.4	0.5	0.3	0.3	0.1	0.0
				570	0.6	0.5	0.3	0.3	0.1	0.0
			RC ENV~1 Max	563	0.8	0.3	1.5	1.2	-0.7	0.0
				564	0.3	0.2	0.9	0.9	1.8	0.0
				571	0.2	0.8	0.6	0.3	2.0	0.0
				570	0.9	0.7	3.2	0.4	-0.5	0.0
			Min	563	-0.2	-0.8	0.2	-0.6	-2.3	0.0
				564	-1.0	-0.7	-0.7	-0.7	-0.0	0.0
				571	-0.8	-0.3	-0.2	-1.4	-0.0	0.0
				570	-0.3	-0.2	1.6	-1.2	-2.0	0.0
			RC ENV~2 Max	563	0.6	-0.2	1.0	0.7	-1.3	0.0
				564	-0.2	-0.2	0.4	0.5	1.3	0.0
				571	-0.3	0.4	0.5	0.1	1.3	0.0
				570	0.6	0.3	2.4	0.1	-1.1	0.0
			Min	563	0.3	-0.4	0.5	-0.2	-1.7	0.0
				564	-0.7	-0.3	-0.4	-0.4	0.7	0.0
				571	-0.5	0.2	0.1	-0.9	0.8	0.0
				570	0.2	0.2	2.0	-0.7	-1.5	0.0
528	1	1	SX (RS)	564	0.4	0.3	0.6	0.5	1.0	0.0
				565	0.7	0.2	1.2	0.4	1.2	0.0
				572	0.4	0.3	0.4	0.3	1.3	0.0
				571	0.6	0.1	0.6	0.2	0.9	0.0
			SY (RS)	564	0.4	0.6	0.2	0.4	0.1	0.0
				565	0.8	0.5	0.2	0.5	0.2	0.0
				572	0.5	0.6	0.3	0.4	0.1	0.0
				571	0.7	0.5	0.4	0.4	0.1	0.0
			RC ENV~1 Max	564	0.8	0.3	3.4	0.8	0.1	0.0
				565	0.4	0.3	-0.2	0.8	1.4	0.0
				572	0.2	0.9	0.9	0.6	1.4	0.0
				571	1.1	0.7	3.8	0.4	-0.0	0.0
			Min	564	-0.2	-0.9	1.3	-0.9	-2.0	0.0
				565	-1.2	-0.7	-3.9	-0.9	-1.0	0.0
				572	-0.7	-0.3	-0.2	-1.2	-1.2	0.0
				571	-0.4	-0.4	1.9	-1.3	-1.8	0.0
			RC ENV~2 Max	564	0.6	-0.1	2.5	0.4	-0.7	0.0
				565	-0.2	-0.1	-1.1	0.4	0.6	0.0
				572	-0.2	0.5	0.6	0.2	0.4	0.0
				571	0.8	0.3	2.9	0.1	-0.7	0.0
			Min	564	0.2	-0.5	1.7	-0.5	-1.3	0.0
				565	-0.8	-0.2	-2.8	-0.5	-0.1	0.0
				572	-0.5	0.1	0.2	-0.7	-0.4	0.0
				571	0.2	0.1	2.3	-0.8	-1.3	0.0
529	1	1	SX (RS)	565	0.3	0.4	0.1	0.6	1.3	0.0
				566	1.0	0.5	1.9	0.7	1.7	0.0
				573	0.2	0.4	1.1	0.1	1.4	0.0
				572	0.8	0.4	1.0	0.2	1.3	0.0
			SY (RS)	565	0.5	0.6	0.6	0.7	0.1	0.0
				566	1.0	1.1	1.4	0.9	0.4	0.0
				573	0.7	0.4	0.3	0.6	0.2	0.0
				572	0.9	0.9	0.9	0.5	0.2	0.0

			RC ENV~1	Max	565	0.8	0.3	4.4	0.2	1.3	0.0
					566	0.5	1.1	-1.8	0.4	0.6	0.0
					573	0.5	0.7	3.0	0.8	0.2	0.0
					572	1.4	0.9	5.7	0.5	1.1	0.0
				Min	565	-0.3	-0.9	2.0	-1.5	-1.4	0.0
					566	-1.6	-1.0	-9.0	-1.7	-2.8	0.0
					573	-0.8	-0.2	-0.2	-1.1	-2.7	0.0
					572	-0.5	-0.8	2.4	-1.5	-1.5	0.0
			RC ENV~2	Max	565	0.4	-0.1	3.3	-0.0	0.4	0.0
					566	-0.1	0.3	-3.3	0.1	-0.6	0.0
					573	-0.1	0.4	2.1	0.2	-0.8	0.0
					572	1.0	0.1	4.3	0.0	0.1	0.0
				Min	565	0.2	-0.6	2.5	-1.1	-0.4	0.0
					566	-1.2	-0.1	-6.4	-0.9	-1.8	0.0
					573	-0.3	0.1	0.8	-0.6	-2.0	0.0
					572	0.1	-0.2	3.0	-0.9	-0.6	0.0
530	1	1	SX (RS)		566	0.2	0.4	5.0	0.5	1.6	0.0
					212	0.4	0.4	3.8	0.4	0.4	0.0
					215	0.2	0.5	1.6	0.1	0.3	0.0
					573	0.5	0.4	0.5	0.3	1.6	0.0
			SY (RS)		566	0.8	0.2	1.5	1.2	0.1	0.0
					212	0.5	1.4	3.2	1.3	0.6	0.0
					215	0.7	0.4	1.1	0.6	0.6	0.0
					573	0.6	1.2	1.6	0.5	0.3	0.0
			RC ENV~1	Max	566	0.8	0.2	4.9	0.1	3.3	0.0
					212	0.3	1.4	2.2	0.4	-1.1	0.0
					215	0.7	0.7	4.4	0.7	-1.4	0.0
					573	0.9	1.2	5.5	0.5	2.7	0.0
				Min	566	-0.8	-0.6	-5.1	-2.3	-0.2	0.0
					212	-0.7	-1.4	-5.5	-2.2	-2.5	0.0
					215	-0.8	-0.2	-0.4	-1.1	-3.3	0.0
					573	-0.3	-1.2	2.1	-1.5	-0.5	0.0
			RC ENV~2	Max	566	0.1	-0.1	1.5	-0.4	2.4	0.0
					212	-0.1	0.1	-1.3	-0.1	-1.7	0.0
					215	0.0	0.4	3.1	0.1	-1.9	0.0
					573	0.6	0.1	4.2	0.1	1.8	0.0
				Min	566	-0.1	-0.4	-2.4	-1.4	1.0	0.0
					212	-0.5	-0.0	-3.1	-1.0	-1.9	0.0
					215	-0.1	0.0	1.1	-0.7	-2.5	0.0
					573	0.1	-0.2	3.6	-0.9	0.6	0.0
531	1	1	SX (RS)		520	0.2	0.2	0.8	0.1	0.5	0.0
					567	0.1	0.0	0.9	0.2	0.4	0.0
					574	0.2	0.2	0.4	0.0	0.6	0.0
					528	0.1	0.1	0.4	0.2	0.0	0.0
			SY (RS)		520	0.1	0.6	2.0	0.8	0.4	0.0
					567	0.3	0.2	0.7	1.0	0.4	0.0
					574	0.1	0.6	1.1	0.1	0.1	0.0
					528	0.3	0.3	1.5	0.3	0.4	0.0
			RC ENV~1	Max	520	0.8	0.4	0.4	1.8	0.7	0.0
					567	0.1	-0.0	3.3	0.9	0.5	0.0
					574	-0.1	0.8	2.2	-0.7	1.1	0.0
					528	0.8	0.6	5.4	-0.2	1.4	0.0
				Min	520	0.0	-0.8	-4.6	-0.5	-0.8	0.0
					567	-0.8	-0.6	0.3	-1.2	-1.2	0.0
					574	-0.8	-0.3	-0.3	-2.6	0.0	0.0
					528	-0.0	-0.0	0.9	-1.3	-0.4	0.0

			RC ENV~2	Max	520	0.6	-0.2	-1.6	1.2	0.5	0.0
					567	-0.2	-0.2	2.3	0.3	0.1	0.0
					574	-0.2	0.4	1.2	-0.8	0.8	0.0
					528	0.5	0.4	3.9	-0.4	0.9	0.0
				Min	520	0.2	-0.4	-3.2	0.3	-0.5	0.0
					567	-0.5	-0.4	1.2	-0.2	-0.8	0.0
					574	-0.6	0.2	-0.0	-1.8	0.1	0.0
					528	0.2	0.2	2.5	-0.9	-0.0	0.0
532	1	1	SX (RS)		567	0.3	0.3	0.3	0.1	0.6	0.0
					568	0.1	0.0	0.6	0.1	0.8	0.0
					575	0.3	0.3	0.4	0.2	0.7	0.0
					574	0.1	0.0	0.5	0.2	0.5	0.0
			SY (RS)		567	0.4	0.7	2.2	0.7	0.1	0.0
					568	0.5	0.3	0.2	0.9	0.1	0.0
					575	0.5	0.6	0.6	0.1	0.1	0.0
					574	0.5	0.2	1.4	0.4	0.3	0.0
			RC ENV~1	Max	567	0.8	0.5	0.1	1.9	-0.0	0.0
					568	0.3	0.0	4.8	0.6	1.3	0.0
					575	0.2	0.9	1.4	-0.5	1.8	0.0
					574	0.8	0.6	4.6	0.1	1.0	0.0
				Min	567	-0.2	-0.9	-5.6	-0.3	-1.2	0.0
					568	-0.8	-0.6	1.6	-1.1	-0.2	0.0
					575	-0.8	-0.4	-0.3	-2.5	0.4	0.0
					574	-0.2	0.0	0.8	-1.2	-0.7	0.0
			RC ENV~2	Max	567	0.6	-0.2	-2.1	1.3	-0.2	0.0
					568	-0.2	-0.2	3.4	0.3	0.6	0.0
					575	-0.2	0.4	1.0	-0.7	1.2	0.0
					574	0.5	0.4	3.3	-0.2	0.7	0.0
				Min	567	0.2	-0.4	-3.9	0.3	-0.8	0.0
					568	-0.5	-0.4	2.2	-0.3	0.0	0.0
					575	-0.6	0.2	-0.1	-1.7	0.9	0.0
					574	0.2	0.2	2.2	-0.8	-0.2	0.0
533	1	1	SX (RS)		568	0.4	0.3	0.9	0.1	0.7	0.0
					569	0.2	0.0	0.5	0.2	0.7	0.0
					576	0.4	0.3	0.4	0.2	0.7	0.0
					575	0.2	0.0	0.5	0.2	0.7	0.0
			SY (RS)		568	0.6	0.6	1.3	0.5	0.1	0.0
					569	0.5	0.5	0.2	0.6	0.0	0.0
					576	0.6	0.5	0.3	0.1	0.2	0.0
					575	0.5	0.4	0.9	0.3	0.1	0.0
			RC ENV~1	Max	568	0.9	0.3	0.0	1.9	-0.5	0.0
					569	0.2	0.2	4.3	0.8	1.7	0.0
					576	0.3	0.8	1.0	-0.3	2.0	0.0
					575	0.8	0.7	3.6	0.2	0.0	0.0
				Min	568	-0.3	-0.8	-3.9	-0.2	-1.8	0.0
					569	-0.8	-0.7	1.5	-0.8	0.3	0.0
					576	-0.8	-0.3	-0.4	-2.2	0.7	0.0
					575	-0.2	-0.2	1.1	-1.2	-1.4	0.0
			RC ENV~2	Max	568	0.6	-0.2	-1.2	1.2	-1.0	0.0
					569	-0.3	-0.2	3.1	0.5	1.0	0.0
					576	-0.3	0.4	0.7	-0.5	1.5	0.0
					575	0.5	0.4	2.6	-0.1	-0.2	0.0
				Min	568	0.2	-0.4	-2.7	0.2	-1.3	0.0
					569	-0.5	-0.4	1.9	-0.2	0.8	0.0
					576	-0.6	0.2	-0.2	-1.5	1.4	0.0
					575	0.3	0.2	1.9	-0.8	-0.7	0.0

534	1	1	SX (RS)	569	0.4	0.2	0.8	0.2	0.6	0.0
				570	0.3	0.0	0.6	0.2	0.8	0.0
				577	0.4	0.2	0.4	0.2	0.8	0.0
				576	0.3	0.0	0.4	0.2	0.7	0.0
			SY (RS)	569	0.5	0.5	0.6	0.4	0.1	0.0
				570	0.6	0.5	0.2	0.4	0.1	0.0
				577	0.5	0.5	0.2	0.1	0.1	0.0
				576	0.5	0.5	0.4	0.2	0.0	0.0
			RC ENV~1 Max	569	0.8	0.3	0.6	1.8	-0.8	0.0
				570	0.3	0.3	2.7	1.1	1.8	0.0
				577	0.2	0.7	0.7	-0.1	2.1	0.0
				576	0.8	0.7	3.1	0.2	-0.4	0.0
			Min	569	-0.2	-0.7	-1.5	-0.1	-2.0	0.0
				570	-0.8	-0.7	0.6	-0.5	0.3	0.0
				577	-0.8	-0.3	-0.4	-2.0	0.5	0.0
				576	-0.3	-0.3	1.4	-1.3	-1.7	0.0
			RC ENV~2 Max	569	0.5	-0.2	-0.1	1.2	-1.4	0.0
				570	-0.3	-0.2	1.9	0.7	1.3	0.0
				577	-0.3	0.4	0.4	-0.3	1.6	0.0
				576	0.5	0.4	2.3	-0.0	-0.9	0.0
			Min	569	0.3	-0.4	-1.0	0.2	-1.5	0.0
				570	-0.6	-0.4	1.2	-0.1	0.9	0.0
				577	-0.5	0.2	-0.2	-1.3	1.2	0.0
				576	0.3	0.2	1.8	-0.8	-1.0	0.0
535	1	1	SX (RS)	570	0.4	0.2	0.6	0.3	0.8	0.0
				571	0.4	0.1	0.7	0.2	0.9	0.0
				578	0.4	0.2	0.3	0.2	1.0	0.0
				577	0.4	0.1	0.4	0.2	0.8	0.0
			SY (RS)	570	0.5	0.6	0.2	0.3	0.0	0.0
				571	0.6	0.5	0.4	0.3	0.1	0.0
				578	0.5	0.6	0.4	0.2	0.0	0.0
				577	0.6	0.5	0.2	0.1	0.1	0.0
			RC ENV~1 Max	570	0.8	0.3	1.4	1.7	-0.5	0.0
				571	0.3	0.3	0.9	1.3	1.7	0.0
				578	0.3	0.8	0.5	-0.0	1.9	0.0
				577	0.9	0.7	3.0	0.1	-0.3	0.0
			Min	570	-0.2	-0.8	0.2	-0.2	-2.1	0.0
				571	-0.9	-0.7	-0.4	-0.3	-0.1	0.0
				578	-0.8	-0.3	-0.2	-1.8	-0.1	0.0
				577	-0.3	-0.3	1.6	-1.5	-1.9	0.0
			RC ENV~2 Max	570	0.5	-0.2	0.9	1.1	-1.2	0.0
				571	-0.2	-0.1	0.6	0.8	1.1	0.0
				578	-0.3	0.3	0.2	-0.2	1.2	0.0
				577	0.6	0.3	2.3	-0.1	-0.9	0.0
			Min	570	0.3	-0.4	0.5	0.1	-1.5	0.0
				571	-0.6	-0.3	-0.0	-0.1	0.6	0.0
				578	-0.5	0.2	-0.1	-1.2	0.6	0.0
				577	0.2	0.1	1.9	-0.9	-1.3	0.0
536	1	1	SX (RS)	571	0.3	0.2	0.4	0.3	1.0	0.0
				572	0.5	0.3	0.7	0.2	1.2	0.0
				579	0.3	0.2	0.3	0.2	1.2	0.0
				578	0.5	0.2	0.4	0.2	1.0	0.0
			SY (RS)	571	0.5	0.6	0.1	0.4	0.0	0.0
				572	0.8	0.6	0.8	0.4	0.1	0.0
				579	0.6	0.6	0.6	0.2	0.1	0.0
				578	0.7	0.6	0.3	0.1	0.1	0.0

			RC ENV~1	Max	571	0.8	0.4	2.8	1.4	0.2	0.0
					572	0.4	0.5	-0.1	1.4	1.3	0.0
					579	0.4	0.8	0.6	0.0	1.3	0.0
					578	1.0	0.7	3.3	-0.0	0.2	0.0
				Min	571	-0.3	-0.8	1.3	-0.4	-1.9	0.0
					572	-1.1	-0.8	-2.5	-0.4	-1.0	0.0
					579	-0.8	-0.4	-0.5	-1.7	-1.1	0.0
					578	-0.4	-0.5	1.9	-1.7	-1.7	0.0
			RC ENV~2	Max	571	0.4	-0.1	2.1	0.9	-0.6	0.0
					572	-0.2	-0.0	-0.6	0.9	0.4	0.0
					579	-0.2	0.3	0.3	-0.2	0.4	0.0
					578	0.6	0.2	2.5	-0.2	-0.5	0.0
				Min	571	0.2	-0.3	1.5	-0.1	-1.1	0.0
					572	-0.7	-0.2	-1.7	-0.1	-0.2	0.0
					579	-0.4	0.1	0.0	-1.1	-0.3	0.0
					578	0.2	0.0	2.1	-1.1	-1.0	0.0
537	1	1	SX (RS)		572	0.2	0.2	0.4	0.2	1.2	0.0
					573	0.4	0.3	0.1	0.3	1.2	0.0
					580	0.2	0.3	0.3	0.2	1.1	0.0
					579	0.4	0.3	0.3	0.2	1.2	0.0
			SY (RS)		572	0.6	0.5	0.4	0.6	0.0	0.0
					573	0.7	0.8	1.3	0.4	0.2	0.0
					580	0.6	0.4	1.0	0.3	0.2	0.0
					579	0.7	0.7	0.5	0.1	0.2	0.0
			RC ENV~1	Max	572	0.8	0.3	3.2	1.2	1.2	0.0
					573	0.4	0.7	-0.1	1.5	0.3	0.0
					580	0.5	0.6	0.9	0.1	0.2	0.0
					579	0.9	0.8	3.8	-0.0	1.1	0.0
				Min	572	-0.5	-0.7	1.5	-0.7	-1.2	0.0
					573	-0.9	-0.9	-3.4	-0.5	-2.1	0.0
					580	-0.8	-0.3	-1.0	-1.7	-2.0	0.0
					579	-0.4	-0.6	2.2	-1.9	-1.2	0.0
			RC ENV~2	Max	572	0.3	-0.1	2.4	0.7	0.5	0.0
					573	-0.1	0.0	-1.4	0.9	-0.5	0.0
					580	-0.1	0.2	0.4	-0.2	-0.6	0.0
					579	0.5	0.1	2.9	-0.2	0.3	0.0
				Min	572	0.1	-0.3	1.9	-0.2	-0.3	0.0
					573	-0.5	-0.1	-2.4	-0.1	-1.3	0.0
					580	-0.3	0.1	-0.0	-1.1	-1.4	0.0
					579	0.1	-0.0	2.5	-1.2	-0.4	0.0
538	1	1	SX (RS)		573	0.2	0.3	0.8	0.2	1.0	0.0
					215	0.4	0.4	0.7	0.4	1.1	0.0
					218	0.1	0.4	0.2	0.2	0.7	0.0
					580	0.4	0.4	0.2	0.3	1.2	0.0
			SY (RS)		573	0.5	0.3	0.7	0.7	0.2	0.0
					215	0.5	0.8	1.4	0.5	0.3	0.0
					218	0.5	0.3	1.2	0.3	0.2	0.0
					580	0.5	0.7	0.8	0.1	0.2	0.0
			RC ENV~1	Max	573	0.7	0.2	3.0	1.1	2.0	0.0
					215	0.2	0.7	-0.0	1.2	-0.9	0.0
					218	0.4	0.6	0.9	0.1	-1.1	0.0
					580	0.7	0.8	4.5	0.2	2.0	0.0
				Min	573	-0.4	-0.5	1.0	-0.8	-0.1	0.0
					215	-0.7	-0.8	-3.1	-0.8	-3.5	0.0
					218	-0.6	-0.2	-1.5	-1.6	-3.0	0.0
					580	-0.3	-0.7	2.3	-1.9	-0.3	0.0

			RC ENV~2	Max	573	0.2	-0.0	2.2	0.6	1.5	0.0
					215	-0.1	0.0	-1.4	0.7	-1.6	0.0
					218	-0.1	0.3	0.3	-0.1	-1.6	0.0
					580	0.4	0.1	3.4	-0.1	1.4	0.0
				Min	573	0.1	-0.3	1.6	-0.2	0.7	0.0
					215	-0.5	-0.1	-2.3	-0.3	-2.6	0.0
					218	-0.2	0.0	-0.3	-1.0	-2.3	0.0
					580	0.1	-0.0	2.9	-1.2	0.5	0.0
539	1	1	SX (RS)		528	0.0	0.0	0.8	0.0	0.0	0.0
					574	0.0	0.1	0.8	0.1	0.4	0.0
					581	0.0	0.1	0.8	0.1	0.4	0.0
					536	0.0	0.0	0.8	0.0	0.0	0.0
			SY (RS)		528	0.1	0.2	1.5	0.3	0.0	0.0
					574	0.2	0.2	0.8	0.4	0.1	0.0
					581	0.2	0.2	0.8	0.4	0.1	0.0
					536	0.1	0.2	1.5	0.3	0.0	0.0
			RC ENV~1	Max	528	0.8	-0.1	1.2	2.5	0.2	0.0
					574	-0.1	-0.1	4.5	1.3	0.7	0.0
					581	-0.1	0.5	1.1	-0.4	1.0	0.0
					536	0.8	0.6	4.0	-0.2	1.2	0.0
				Min	528	0.1	-0.6	-2.5	0.5	-0.9	0.0
					574	-0.8	-0.6	0.9	-0.0	-0.9	0.0
					581	-0.8	0.1	-1.9	-2.6	0.0	0.0
					536	0.1	0.1	0.1	-1.3	-0.2	0.0
			RC ENV~2	Max	528	0.6	-0.2	-0.4	1.7	0.1	0.0
					574	-0.2	-0.2	3.1	0.9	0.3	0.0
					581	-0.2	0.4	0.3	-0.8	0.8	0.0
					536	0.6	0.4	2.8	-0.5	0.7	0.0
				Min	528	0.2	-0.4	-1.6	0.7	-0.7	0.0
					574	-0.6	-0.4	1.6	0.4	-0.5	0.0
					581	-0.6	0.2	-1.1	-1.8	0.1	0.0
					536	0.2	0.2	1.6	-0.9	-0.2	0.0
540	1	1	SX (RS)		574	0.2	0.1	0.4	0.1	0.5	0.0
					575	0.2	0.1	0.4	0.2	0.7	0.0
					582	0.2	0.1	0.4	0.2	0.7	0.0
					581	0.2	0.1	0.4	0.1	0.5	0.0
			SY (RS)		574	0.4	0.4	1.7	0.1	0.1	0.0
					575	0.4	0.4	0.2	0.4	0.2	0.0
					582	0.4	0.4	0.2	0.4	0.2	0.0
					581	0.4	0.4	1.7	0.1	0.1	0.0
			RC ENV~1	Max	574	0.8	0.2	1.1	2.5	-0.2	0.0
					575	0.2	0.2	4.9	1.3	1.3	0.0
					582	0.2	0.6	1.0	-0.3	1.6	0.0
					581	0.8	0.7	3.1	-0.3	0.8	0.0
				Min	574	-0.1	-0.6	-2.7	0.5	-1.1	0.0
					575	-0.8	-0.7	1.6	-0.1	-0.0	0.0
					582	-0.8	-0.2	-1.2	-2.4	0.3	0.0
					581	-0.2	-0.2	-0.5	-1.3	-0.8	0.0
			RC ENV~2	Max	574	0.5	-0.2	-0.6	1.7	-0.2	0.0
					575	-0.2	-0.2	3.4	0.9	0.6	0.0
					582	-0.2	0.4	0.7	-0.6	1.0	0.0
					581	0.5	0.4	2.2	-0.4	0.4	0.0
				Min	574	0.2	-0.4	-1.8	0.7	-0.8	0.0
					575	-0.5	-0.4	2.0	0.2	0.1	0.0
					582	-0.5	0.2	-0.6	-1.6	0.7	0.0
					581	0.2	0.2	1.1	-0.9	-0.4	0.0

541	1	1	SX (RS)	575	0.2	0.2	0.4	0.2	0.6	0.0
				576	0.3	0.1	0.4	0.2	0.7	0.0
				583	0.2	0.1	0.4	0.2	0.7	0.0
				582	0.3	0.2	0.4	0.2	0.6	0.0
			SY (RS)	575	0.5	0.5	1.3	0.1	0.1	0.0
				576	0.5	0.5	0.1	0.3	0.1	0.0
				583	0.5	0.5	0.1	0.3	0.1	0.0
				582	0.5	0.5	1.3	0.1	0.1	0.0
			RC ENV~1 Max	575	0.8	0.3	0.9	2.4	-0.4	0.0
				576	0.3	0.3	4.4	1.4	1.7	0.0
				583	0.3	0.7	0.9	-0.2	1.9	0.0
				582	0.8	0.7	2.7	-0.1	-0.1	0.0
			Min	575	-0.3	-0.7	-2.0	0.3	-1.7	0.0
				576	-0.8	-0.7	1.4	-0.1	0.3	0.0
				583	-0.8	-0.3	-0.9	-2.2	0.6	0.0
				582	-0.3	-0.3	-0.1	-1.3	-1.4	0.0
			RC ENV~2 Max	575	0.5	-0.2	-0.4	1.6	-0.8	0.0
				576	-0.3	-0.2	3.1	0.9	1.0	0.0
				583	-0.3	0.4	0.6	-0.5	1.3	0.0
				582	0.5	0.4	1.9	-0.3	-0.2	0.0
			Min	575	0.3	-0.4	-1.4	0.5	-1.1	0.0
				576	-0.5	-0.4	1.8	0.1	0.7	0.0
				583	-0.5	0.2	-0.5	-1.5	1.2	0.0
				582	0.3	0.2	1.1	-0.9	-0.7	0.0
542	1	1	SX (RS)	576	0.3	0.1	0.5	0.2	0.7	0.0
				577	0.3	0.1	0.5	0.2	0.8	0.0
				584	0.3	0.1	0.5	0.2	0.8	0.0
				583	0.3	0.1	0.5	0.2	0.7	0.0
			SY (RS)	576	0.6	0.5	0.7	0.1	0.1	0.0
				577	0.6	0.5	0.2	0.2	0.0	0.0
				584	0.6	0.5	0.2	0.2	0.0	0.0
				583	0.6	0.5	0.7	0.1	0.1	0.0
			RC ENV~1 Max	576	0.8	0.3	0.9	2.2	-0.6	0.0
				577	0.3	0.3	3.2	1.5	1.8	0.0
				584	0.3	0.7	0.7	-0.2	2.0	0.0
				583	0.8	0.8	2.6	-0.0	-0.4	0.0
			Min	576	-0.3	-0.7	-0.7	0.2	-2.0	0.0
				577	-0.8	-0.8	0.8	-0.1	0.2	0.0
				584	-0.8	-0.3	-0.9	-2.0	0.5	0.0
				583	-0.3	-0.3	0.8	-1.4	-1.7	0.0
			RC ENV~2 Max	576	0.5	-0.2	0.2	1.4	-1.3	0.0
				577	-0.3	-0.2	2.2	0.9	1.1	0.0
				584	-0.3	0.3	0.3	-0.4	1.4	0.0
				583	0.5	0.4	1.9	-0.2	-0.7	0.0
			Min	576	0.3	-0.4	-0.4	0.4	-1.3	0.0
				577	-0.5	-0.3	1.2	0.1	0.7	0.0
				584	-0.5	0.2	-0.6	-1.4	1.1	0.0
				583	0.3	0.2	1.4	-0.9	-1.0	0.0
543	1	1	SX (RS)	577	0.4	0.1	0.5	0.2	0.8	0.0
				578	0.4	0.2	0.5	0.2	1.0	0.0
				585	0.4	0.1	0.5	0.2	1.0	0.0
				584	0.4	0.1	0.5	0.2	0.8	0.0
			SY (RS)	577	0.6	0.5	0.3	0.1	0.0	0.0
				578	0.6	0.6	0.4	0.1	0.0	0.0
				585	0.6	0.5	0.4	0.1	0.0	0.0

					584	0.6	0.6	0.3	0.1	0.0	0.0
			RC ENV~1	Max	577	0.8	0.3	1.3	2.0	-0.4	0.0
					578	0.3	0.4	1.6	1.6	1.7	0.0
					585	0.3	0.7	0.2	-0.2	1.9	0.0
					584	0.8	0.8	2.8	0.0	-0.2	0.0
				Min	577	-0.3	-0.7	0.4	0.1	-2.0	0.0
					578	-0.9	-0.8	0.2	-0.0	-0.3	0.0
					585	-0.9	-0.4	-1.1	-1.9	-0.1	0.0
					584	-0.3	-0.4	1.4	-1.5	-1.8	0.0
			RC ENV~2	Max	577	0.5	-0.2	1.0	1.3	-1.1	0.0
					578	-0.2	-0.1	1.2	1.0	0.9	0.0
					585	-0.2	0.3	-0.2	-0.3	1.1	0.0
					584	0.5	0.3	2.1	-0.1	-0.7	0.0
				Min	577	0.2	-0.3	0.7	0.3	-1.4	0.0
					578	-0.5	-0.3	0.6	0.1	0.4	0.0
					585	-0.5	0.1	-0.7	-1.3	0.6	0.0
					584	0.2	0.2	1.7	-1.0	-1.1	0.0
544	1	1	SX (RS)		578	0.3	0.2	0.3	0.2	1.0	0.0
					579	0.3	0.2	0.3	0.2	1.1	0.0
					586	0.3	0.2	0.3	0.2	1.1	0.0
					585	0.3	0.2	0.3	0.2	1.0	0.0
			SY (RS)		578	0.6	0.6	0.2	0.2	0.1	0.0
					579	0.6	0.6	0.8	0.1	0.1	0.0
					586	0.7	0.6	0.8	0.1	0.1	0.0
					585	0.6	0.6	0.2	0.2	0.1	0.0
			RC ENV~1	Max	578	0.9	0.4	2.5	1.9	0.2	0.0
					579	0.4	0.5	0.8	1.8	1.2	0.0
					586	0.4	0.7	0.2	-0.2	1.3	0.0
					585	0.9	0.8	3.1	0.0	0.4	0.0
				Min	578	-0.4	-0.8	1.2	0.1	-1.8	0.0
					579	-0.9	-0.8	-0.8	-0.0	-1.1	0.0
					586	-0.9	-0.4	-1.4	-1.8	-1.0	0.0
					585	-0.4	-0.4	2.0	-1.6	-1.7	0.0
			RC ENV~2	Max	578	0.5	-0.1	1.9	1.2	-0.5	0.0
					579	-0.2	-0.1	0.2	1.1	0.3	0.0
					586	-0.2	0.2	-0.6	-0.3	0.4	0.0
					585	0.4	0.2	2.4	-0.1	-0.3	0.0
				Min	578	0.2	-0.2	1.5	0.3	-1.0	0.0
					579	-0.4	-0.2	-0.2	0.2	-0.4	0.0
					586	-0.5	0.1	-0.9	-1.2	-0.3	0.0
					585	0.2	0.1	2.0	-1.0	-0.8	0.0
545	1	1	SX (RS)		579	0.3	0.2	0.2	0.2	1.1	0.0
					580	0.3	0.3	0.2	0.2	1.1	0.0
					587	0.3	0.3	0.2	0.2	1.1	0.0
					586	0.3	0.3	0.2	0.2	1.1	0.0
			SY (RS)		579	0.6	0.6	0.4	0.3	0.1	0.0
					580	0.6	0.6	1.1	0.1	0.1	0.0
					587	0.6	0.6	1.1	0.1	0.1	0.0
					586	0.6	0.6	0.4	0.3	0.1	0.0
			RC ENV~1	Max	579	0.8	0.4	3.3	1.8	1.1	0.0
					580	0.4	0.5	0.7	1.9	0.2	0.0
					587	0.4	0.7	0.3	-0.1	0.3	0.0
					586	0.8	0.7	3.1	0.1	1.2	0.0
				Min	579	-0.4	-0.7	1.5	-0.0	-1.2	0.0
					580	-0.8	-0.7	-1.5	-0.1	-1.9	0.0
					587	-0.8	-0.4	-2.0	-1.7	-1.8	0.0

					586	-0.4	-0.5	2.1	-1.7	-1.1	0.0
			RC ENV~2	Max	579	0.4	-0.0	2.4	1.2	0.4	0.0
					580	-0.2	-0.0	-0.4	1.2	-0.5	0.0
					587	-0.2	0.1	-0.7	-0.3	-0.5	0.0
					586	0.4	0.2	2.5	-0.2	0.5	0.0
				Min	579	0.2	-0.2	1.9	0.2	-0.3	0.0
					580	-0.4	-0.1	-0.6	0.1	-1.3	0.0
					587	-0.4	0.0	-0.9	-1.1	-1.3	0.0
					586	0.2	0.1	2.1	-1.1	-0.2	0.0
546	1	1	SX (RS)		580	0.2	0.3	0.6	0.3	1.0	0.0
					218	0.2	0.4	0.6	0.3	0.7	0.0
					221	0.2	0.4	0.6	0.3	0.7	0.0
					587	0.2	0.3	0.5	0.3	1.0	0.0
			SY (RS)		580	0.5	0.4	0.7	0.3	0.1	0.0
					218	0.5	0.4	1.3	0.2	0.1	0.0
					221	0.5	0.4	1.3	0.2	0.1	0.0
					587	0.5	0.4	0.7	0.3	0.1	0.0
			RC ENV~1	Max	580	0.6	0.3	3.6	1.7	1.9	0.0
					218	0.3	0.3	0.7	1.8	-1.0	0.0
					221	0.3	0.5	0.4	0.2	-1.0	0.0
					587	0.6	0.6	3.2	0.2	1.9	0.0
				Min	580	-0.4	-0.5	1.3	-0.1	-0.2	0.0
					218	-0.6	-0.6	-1.8	-0.3	-2.8	0.0
					221	-0.6	-0.3	-2.1	-1.5	-2.9	0.0
					587	-0.4	-0.3	1.8	-1.8	-0.1	0.0
			RC ENV~2	Max	580	0.2	-0.0	2.7	1.1	1.3	0.0
					218	-0.1	-0.0	-0.5	1.1	-1.5	0.0
					221	-0.1	0.1	-0.4	-0.1	-1.5	0.0
					587	0.2	0.1	2.5	-0.1	1.3	0.0
				Min	580	0.1	-0.1	2.0	0.2	0.6	0.0
					218	-0.2	-0.1	-0.9	0.0	-2.1	0.0
					221	-0.2	0.0	-0.9	-1.0	-2.1	0.0
					587	0.1	0.0	1.8	-1.1	0.6	0.0
547	1	1	SX (RS)		536	0.1	0.1	0.4	0.2	0.0	0.0
					581	0.2	0.2	0.4	0.0	0.6	0.0
					588	0.1	0.0	0.9	0.2	0.4	0.0
					544	0.2	0.2	0.8	0.1	0.5	0.0
			SY (RS)		536	0.3	0.2	1.5	0.3	0.4	0.0
					581	0.1	0.6	1.1	0.1	0.1	0.0
					588	0.3	0.2	0.7	1.0	0.4	0.0
					544	0.1	0.6	2.0	0.8	0.4	0.0
			RC ENV~1	Max	536	0.8	0.0	2.1	2.7	0.4	0.0
					581	-0.1	0.3	6.2	1.4	0.8	0.0
					588	0.1	0.6	0.7	0.6	0.9	0.0
					544	0.8	0.9	2.6	0.6	1.7	0.0
				Min	536	-0.0	-0.6	-1.0	0.6	-0.8	0.0
					581	-0.8	-0.8	1.1	0.4	-1.0	0.0
					588	-0.8	0.0	-3.5	-1.9	-0.4	0.0
					544	0.0	-0.4	-1.4	-1.1	-0.5	0.0
			RC ENV~2	Max	536	0.5	-0.2	0.7	1.9	0.2	0.0
					581	-0.2	-0.2	4.3	1.0	0.3	0.0
					588	-0.2	0.4	-0.2	-0.4	0.5	0.0
					544	0.6	0.4	1.7	-0.2	1.1	0.0
				Min	536	0.2	-0.4	-0.5	0.8	-0.6	0.0
					581	-0.6	-0.4	2.2	0.5	-0.6	0.0
					588	-0.5	0.2	-2.2	-1.3	-0.2	0.0

				544	0.2	0.2	0.3	-0.4	-0.0	0.0
548	1	1	SX (RS)	581	0.1	0.0	0.5	0.2	0.5	0.0
				582	0.3	0.3	0.4	0.2	0.7	0.0
				589	0.1	0.0	0.6	0.1	0.8	0.0
				588	0.3	0.3	0.3	0.1	0.6	0.0
			SY (RS)	581	0.5	0.2	1.4	0.4	0.3	0.0
				582	0.5	0.6	0.6	0.1	0.1	0.0
				589	0.5	0.3	0.2	0.9	0.1	0.0
				588	0.4	0.7	2.2	0.7	0.1	0.0
			RC ENV~1 Max	581	0.8	-0.0	1.9	2.5	0.3	0.0
				582	0.2	0.4	5.8	1.5	1.4	0.0
				589	0.3	0.6	1.3	0.6	1.6	0.0
				588	0.8	0.9	2.1	0.4	1.0	0.0
			Min	581	-0.2	-0.6	-0.9	0.3	-1.0	0.0
				582	-0.8	-0.9	1.5	0.2	-0.1	0.0
				589	-0.8	-0.0	-1.6	-1.7	0.1	0.0
				588	-0.2	-0.5	-2.4	-0.9	-0.9	0.0
			RC ENV~2 Max	581	0.5	-0.2	0.5	1.7	0.1	0.0
				582	-0.2	-0.2	4.0	1.0	0.7	0.0
				589	-0.2	0.4	0.8	-0.3	0.9	0.0
				588	0.6	0.4	0.7	-0.2	0.6	0.0
			Min	581	0.2	-0.4	-0.4	0.6	-0.6	0.0
				582	-0.6	-0.4	2.1	0.4	0.1	0.0
				589	-0.5	0.2	-0.9	-1.1	0.4	0.0
				588	0.2	0.2	-0.9	-0.5	-0.3	0.0
549	1	1	SX (RS)	582	0.2	0.0	0.5	0.2	0.7	0.0
				583	0.4	0.3	0.4	0.2	0.7	0.0
				590	0.2	0.0	0.5	0.2	0.7	0.0
				589	0.4	0.3	0.9	0.1	0.7	0.0
			SY (RS)	582	0.5	0.4	0.9	0.3	0.1	0.0
				583	0.6	0.5	0.3	0.1	0.2	0.0
				590	0.5	0.5	0.2	0.6	0.0	0.0
				589	0.6	0.6	1.3	0.5	0.1	0.0
			RC ENV~1 Max	582	0.8	0.2	1.2	2.3	-0.2	0.0
				583	0.3	0.3	4.9	1.4	1.7	0.0
				590	0.2	0.7	1.1	0.3	1.9	0.0
				589	0.9	0.8	1.7	0.3	-0.0	0.0
			Min	582	-0.2	-0.7	-0.5	0.1	-1.6	0.0
				583	-0.8	-0.8	1.3	0.1	0.4	0.0
				590	-0.8	-0.2	-1.4	-1.7	0.5	0.0
				589	-0.3	-0.3	-0.9	-0.9	-1.5	0.0
			RC ENV~2 Max	582	0.5	-0.2	0.4	1.5	-0.6	0.0
				583	-0.2	-0.2	3.4	1.0	1.0	0.0
				590	-0.3	0.4	0.7	-0.2	1.2	0.0
				589	0.5	0.4	1.0	-0.1	-0.2	0.0
			Min	582	0.3	-0.4	-0.2	0.5	-1.0	0.0
				583	-0.5	-0.4	1.8	0.3	0.6	0.0
				590	-0.5	0.2	-0.8	-1.1	1.1	0.0
				589	0.2	0.2	-0.3	-0.6	-0.8	0.0
550	1	1	SX (RS)	583	0.3	0.0	0.4	0.2	0.7	0.0
				584	0.4	0.2	0.4	0.2	0.8	0.0
				591	0.3	0.0	0.6	0.2	0.8	0.0
				590	0.4	0.2	0.8	0.2	0.6	0.0
			SY (RS)	583	0.5	0.5	0.4	0.2	0.0	0.0
				584	0.5	0.5	0.2	0.1	0.1	0.0

					591	0.6	0.5	0.2	0.4	0.1	0.0
					590	0.5	0.5	0.6	0.4	0.1	0.0
			RC ENV~1	Max	583	0.8	0.2	1.0	2.1	-0.6	0.0
					584	0.2	0.3	3.8	1.5	1.8	0.0
					591	0.3	0.7	0.7	0.1	2.0	0.0
					590	0.8	0.8	2.0	0.2	-0.4	0.0
				Min	583	-0.3	-0.7	0.1	0.2	-1.9	0.0
					584	-0.8	-0.8	1.0	-0.0	0.2	0.0
					591	-0.8	-0.2	-1.6	-1.7	0.5	0.0
					590	-0.2	-0.3	0.4	-1.0	-1.7	0.0
			RC ENV~2	Max	583	0.6	-0.2	0.6	1.4	-1.1	0.0
					584	-0.3	-0.2	2.6	1.0	1.1	0.0
					591	-0.3	0.4	0.2	-0.3	1.3	0.0
					590	0.5	0.4	1.5	-0.1	-0.6	0.0
				Min	583	0.3	-0.4	0.2	0.4	-1.3	0.0
					584	-0.5	-0.4	1.3	0.1	0.6	0.0
					591	-0.6	0.2	-1.0	-1.1	1.0	0.0
					590	0.3	0.2	0.8	-0.7	-1.1	0.0
551	1	1	SX (RS)		584	0.4	0.1	0.4	0.2	0.8	0.0
					585	0.4	0.2	0.3	0.2	1.0	0.0
					592	0.4	0.1	0.7	0.2	0.9	0.0
					591	0.4	0.2	0.6	0.3	0.8	0.0
			SY (RS)		584	0.6	0.5	0.2	0.1	0.1	0.0
					585	0.5	0.6	0.4	0.2	0.0	0.0
					592	0.6	0.5	0.4	0.3	0.1	0.0
					591	0.5	0.6	0.2	0.3	0.0	0.0
			RC ENV~1	Max	584	0.9	0.3	1.6	2.0	-0.5	0.0
					585	0.3	0.4	2.6	1.6	1.6	0.0
					592	0.3	0.7	0.1	0.0	1.8	0.0
					591	0.8	0.8	2.5	0.3	-0.2	0.0
				Min	584	-0.3	-0.7	0.6	0.2	-2.0	0.0
					585	-0.8	-0.8	0.6	-0.1	-0.4	0.0
					592	-0.9	-0.3	-2.2	-1.6	-0.1	0.0
					591	-0.2	-0.3	1.2	-1.1	-1.8	0.0
			RC ENV~2	Max	584	0.6	-0.1	1.2	1.4	-1.0	0.0
					585	-0.2	-0.2	1.8	1.0	0.8	0.0
					592	-0.2	0.3	-0.5	-0.2	1.1	0.0
					591	0.5	0.4	1.9	0.0	-0.5	0.0
				Min	584	0.2	-0.3	0.9	0.4	-1.4	0.0
					585	-0.5	-0.4	0.9	0.1	0.2	0.0
					592	-0.6	0.1	-1.5	-1.0	0.5	0.0
					591	0.2	0.2	1.5	-0.7	-1.1	0.0
552	1	1	SX (RS)		585	0.5	0.2	0.4	0.2	1.0	0.0
					586	0.3	0.2	0.3	0.2	1.2	0.0
					593	0.5	0.2	0.7	0.2	1.2	0.0
					592	0.3	0.2	0.4	0.3	1.0	0.0
			SY (RS)		585	0.7	0.6	0.3	0.1	0.1	0.0
					586	0.6	0.6	0.6	0.2	0.1	0.0
					593	0.8	0.6	0.8	0.4	0.1	0.0
					592	0.5	0.6	0.1	0.4	0.0	0.0
			RC ENV~1	Max	585	1.0	0.5	2.9	2.0	0.1	0.0
					586	0.4	0.4	1.7	1.7	1.1	0.0
					593	0.4	0.7	-0.7	0.2	1.4	0.0
					592	0.8	0.8	3.2	0.5	0.4	0.0
				Min	585	-0.4	-0.7	1.2	0.2	-1.8	0.0
					586	-0.8	-0.8	0.1	-0.1	-1.3	0.0

					593	-1.1	-0.5	-3.4	-1.4	-1.0	0.0
					592	-0.3	-0.4	2.0	-1.1	-1.6	0.0
			RC ENV~2	Max	585	0.6	-0.0	2.2	1.3	-0.5	0.0
					586	-0.2	-0.1	1.2	1.1	0.1	0.0
					593	-0.2	0.2	-1.3	-0.2	0.4	0.0
					592	0.4	0.4	2.5	0.1	-0.2	0.0
				Min	585	0.2	-0.2	1.5	0.4	-1.0	0.0
					586	-0.4	-0.3	0.7	0.1	-0.6	0.0
					593	-0.7	0.0	-2.5	-0.9	-0.3	0.0
					592	0.2	0.2	1.8	-0.7	-0.7	0.0
553	1	1	SX (RS)		586	0.4	0.3	0.3	0.2	1.2	0.0
					587	0.2	0.3	0.3	0.2	1.1	0.0
					594	0.4	0.3	0.1	0.3	1.2	0.0
					593	0.2	0.3	0.4	0.2	1.2	0.0
			SY (RS)		586	0.7	0.7	0.5	0.1	0.2	0.0
					587	0.6	0.5	1.0	0.3	0.2	0.0
					594	0.7	0.8	1.3	0.4	0.2	0.0
					593	0.6	0.5	0.4	0.6	0.0	0.0
			RC ENV~1	Max	586	0.9	0.6	4.1	1.9	1.1	0.0
					587	0.5	0.3	1.4	1.8	0.1	0.0
					594	0.4	0.9	-0.5	0.3	0.4	0.0
					593	0.8	0.7	2.9	0.7	1.4	0.0
				Min	586	-0.4	-0.8	1.6	0.2	-1.3	0.0
					587	-0.8	-0.6	-0.5	-0.1	-2.1	0.0
					594	-0.9	-0.7	-3.6	-1.2	-2.1	0.0
					593	-0.5	-0.3	2.0	-1.1	-1.1	0.0
			RC ENV~2	Max	586	0.5	0.0	3.0	1.3	0.4	0.0
					587	-0.1	-0.1	0.8	1.1	-0.7	0.0
					594	-0.2	0.1	-1.8	-0.1	-0.6	0.0
					593	0.3	0.3	2.5	0.2	0.7	0.0
				Min	586	0.2	-0.1	2.1	0.4	-0.3	0.0
					587	-0.3	-0.2	0.4	0.1	-1.5	0.0
					594	-0.5	-0.0	-2.6	-0.8	-1.5	0.0
					593	0.1	0.1	1.7	-0.7	-0.1	0.0
554	1	1	SX (RS)		587	0.4	0.4	0.2	0.3	1.2	0.0
					221	0.2	0.4	0.2	0.2	0.7	0.0
					224	0.4	0.4	0.7	0.4	1.1	0.0
					594	0.2	0.3	0.8	0.2	1.0	0.0
			SY (RS)		587	0.5	0.7	0.8	0.1	0.2	0.0
					221	0.5	0.3	1.2	0.3	0.2	0.0
					224	0.5	0.8	1.4	0.5	0.3	0.0
					594	0.5	0.3	0.7	0.7	0.2	0.0
			RC ENV~1	Max	587	0.7	0.7	5.2	1.7	2.1	0.0
					221	0.4	0.2	1.2	1.8	-1.1	0.0
					224	0.2	0.8	-0.3	0.7	-0.8	0.0
					594	0.7	0.5	2.9	0.8	2.2	0.0
				Min	587	-0.3	-0.8	1.9	-0.1	-0.3	0.0
					221	-0.6	-0.6	-1.2	-0.2	-3.0	0.0
					224	-0.7	-0.7	-3.1	-0.9	-3.7	0.0
					594	-0.4	-0.2	1.0	-1.1	0.0	0.0
			RC ENV~2	Max	587	0.4	0.1	3.8	1.1	1.5	0.0
					221	-0.1	-0.0	0.1	1.1	-1.6	0.0
					224	-0.1	0.1	-1.5	0.2	-1.7	0.0
					594	0.2	0.3	2.2	0.2	1.6	0.0
				Min	587	0.1	-0.1	2.7	0.2	0.7	0.0
					221	-0.2	-0.3	-0.1	0.1	-2.3	0.0

				224	-0.5	-0.1	-2.0	-0.5	-2.7	0.0
				594	0.1	0.0	1.0	-0.7	0.8	0.0
555	1	1	SX (RS)	544	0.3	0.2	2.3	0.3	0.5	0.0
				588	0.3	0.4	0.7	0.1	1.1	0.0
				595	0.4	0.1	6.5	0.4	1.1	0.0
				552	0.2	0.3	4.8	0.2	1.4	0.0
			SY (RS)	544	0.6	0.7	2.0	0.8	1.0	0.0
				588	0.2	1.2	2.8	0.7	0.1	0.0
				595	0.7	0.5	0.6	2.0	0.1	0.0
				552	0.1	1.4	5.4	2.1	1.2	0.0
			RC ENV~1 Max	544	0.8	0.5	4.1	2.3	1.6	0.0
				588	0.0	1.0	8.8	1.1	1.2	0.0
				595	0.4	0.7	6.1	2.5	1.1	0.0
				552	0.8	1.7	3.8	2.6	3.1	0.0
			Min	544	-0.3	-0.9	-0.5	-0.2	-0.9	0.0
				588	-0.8	-1.4	0.6	-0.3	-1.6	0.0
				595	-0.9	-0.2	-6.9	-1.6	-1.6	0.0
				552	0.1	-1.2	-7.0	-1.6	-0.8	0.0
			RC ENV~2 Max	544	0.5	-0.2	2.7	1.6	1.1	0.0
				588	-0.2	-0.2	6.2	0.6	0.1	0.0
				595	-0.2	0.4	-0.2	1.0	0.1	0.0
				552	0.5	0.4	-0.2	1.2	2.1	0.0
			Min	544	0.2	-0.4	0.8	0.6	0.1	0.0
				588	-0.6	-0.4	3.3	0.4	-1.0	0.0
				595	-0.5	0.2	-3.6	-0.1	-1.1	0.0
				552	0.2	0.2	-3.5	0.4	0.6	0.0
556	1	1	SX (RS)	588	0.2	0.2	1.5	0.2	0.9	0.0
				589	0.7	0.5	1.2	0.2	0.7	0.0
				596	0.1	0.3	0.3	0.5	0.9	0.0
				595	0.9	0.6	2.5	0.6	1.2	0.0
			SY (RS)	588	0.6	0.2	0.2	1.0	0.5	0.0
				589	0.7	0.8	1.3	0.7	0.2	0.0
				596	0.5	0.4	1.0	1.1	0.2	0.0
				595	0.8	1.0	2.6	1.4	0.6	0.0
			RC ENV~1 Max	588	0.8	-0.1	2.8	1.8	1.1	0.0
				589	0.4	0.6	7.5	1.0	1.6	0.0
				596	0.2	0.6	2.4	1.4	1.8	0.0
				595	1.1	1.3	0.5	1.8	1.5	0.0
			Min	588	-0.3	-0.6	-0.3	-0.7	-1.1	0.0
				589	-1.0	-1.0	1.3	-0.5	-0.1	0.0
				596	-0.7	-0.1	-1.5	-0.8	0.0	0.0
				595	-0.6	-0.8	-6.0	-1.1	-1.4	0.0
			RC ENV~2 Max	588	0.5	-0.2	1.6	1.2	0.7	0.0
				589	-0.2	-0.2	5.3	0.6	0.9	0.0
				596	-0.2	0.4	1.5	0.7	0.9	0.0
				595	0.6	0.4	-1.1	1.0	1.0	0.0
			Min	588	0.2	-0.4	0.5	0.2	-0.3	0.0
				589	-0.6	-0.4	2.6	0.2	0.1	0.0
				596	-0.5	0.2	-0.7	-0.3	0.5	0.0
				595	0.1	0.2	-4.3	0.3	-0.2	0.0
557	1	1	SX (RS)	589	0.2	0.2	0.5	0.2	0.8	0.0
				590	0.6	0.2	0.6	0.2	0.6	0.0
				597	0.3	0.2	0.7	0.4	0.7	0.0
				596	0.6	0.2	1.5	0.2	0.7	0.0
			SY (RS)	589	0.4	0.4	0.3	0.6	0.0	0.0

					590	0.5	0.5	0.4	0.5	0.1	0.0
					597	0.5	0.4	0.1	0.6	0.2	0.0
					596	0.5	0.5	0.2	0.7	0.0	0.0
			RC ENV~1	Max	589	0.7	0.2	1.1	1.7	-0.1	0.0
					590	0.3	0.2	5.8	0.9	1.7	0.0
					597	0.2	0.6	1.5	0.6	1.9	0.0
					596	0.9	0.7	1.5	0.9	0.2	0.0
				Min	589	-0.2	-0.7	0.0	-0.4	-1.7	0.0
					590	-0.9	-0.7	1.3	-0.4	0.4	0.0
					597	-0.7	-0.1	-2.0	-0.9	0.6	0.0
					596	-0.4	-0.2	-1.6	-0.6	-1.5	0.0
			RC ENV~2	Max	589	0.5	-0.2	0.6	1.1	-0.5	0.0
					590	-0.2	-0.2	4.0	0.6	1.1	0.0
					597	-0.3	0.4	0.9	0.1	1.3	0.0
					596	0.6	0.4	0.5	0.5	-0.0	0.0
				Min	589	0.3	-0.4	0.2	0.1	-0.9	0.0
					590	-0.6	-0.4	1.9	0.1	0.5	0.0
					597	-0.5	0.2	-1.1	-0.6	1.0	0.0
					596	0.2	0.2	-1.1	0.1	-0.9	0.0
558	1	1	SX (RS)		590	0.4	0.1	0.4	0.2	0.7	0.0
					591	0.5	0.2	0.5	0.2	0.8	0.0
					598	0.4	0.1	0.7	0.3	0.7	0.0
					597	0.5	0.2	0.9	0.3	0.6	0.0
			SY (RS)		590	0.5	0.4	0.2	0.4	0.1	0.0
					591	0.4	0.5	0.4	0.4	0.1	0.0
					598	0.5	0.4	0.1	0.4	0.1	0.0
					597	0.4	0.5	0.2	0.5	0.0	0.0
			RC ENV~1	Max	590	0.8	0.1	1.1	1.7	-0.6	0.0
					591	0.2	0.3	4.5	1.1	1.8	0.0
					598	0.3	0.6	0.7	0.3	2.0	0.0
					597	0.8	0.8	1.9	0.6	-0.3	0.0
				Min	590	-0.3	-0.6	0.3	-0.1	-1.9	0.0
					591	-0.8	-0.8	0.9	-0.3	0.3	0.0
					598	-0.8	-0.2	-2.3	-1.0	0.5	0.0
					597	-0.2	-0.3	0.1	-0.5	-1.7	0.0
			RC ENV~2	Max	590	0.6	-0.2	0.8	1.1	-1.0	0.0
					591	-0.3	-0.2	3.1	0.7	1.1	0.0
					598	-0.2	0.4	0.1	-0.1	1.3	0.0
					597	0.5	0.4	1.2	0.2	-0.4	0.0
				Min	590	0.2	-0.4	0.5	0.2	-1.3	0.0
					591	-0.5	-0.4	1.4	0.0	0.4	0.0
					598	-0.6	0.2	-1.4	-0.6	0.8	0.0
					597	0.3	0.2	0.5	-0.1	-1.1	0.0
559	1	1	SX (RS)		591	0.5	0.0	0.5	0.2	0.7	0.0
					592	0.5	0.2	0.4	0.3	1.0	0.0
					599	0.5	0.0	0.8	0.3	0.9	0.0
					598	0.5	0.2	0.6	0.3	0.8	0.0
			SY (RS)		591	0.6	0.4	0.3	0.3	0.1	0.0
					592	0.4	0.6	0.3	0.3	0.1	0.0
					599	0.6	0.4	0.2	0.4	0.1	0.0
					598	0.4	0.6	0.2	0.4	0.0	0.0
			RC ENV~1	Max	591	0.9	0.2	2.2	1.7	-0.5	0.0
					592	0.2	0.3	3.3	1.2	1.6	0.0
					599	0.3	0.7	0.1	0.3	1.8	0.0
					598	0.8	0.8	2.4	0.5	-0.3	0.0
				Min	591	-0.3	-0.7	0.7	-0.1	-2.0	0.0

					592	-0.7	-0.8	0.6	-0.4	-0.4	0.0
					599	-1.0	-0.2	-3.0	-0.9	-0.0	0.0
					598	-0.2	-0.3	1.1	-0.4	-1.8	0.0
			RC ENV~2	Max	591	0.6	-0.2	1.6	1.1	-0.8	0.0
					592	-0.2	-0.2	2.3	0.7	0.7	0.0
					599	-0.2	0.3	-0.7	-0.0	1.0	0.0
					598	0.5	0.4	1.8	0.3	-0.4	0.0
				Min	591	0.2	-0.3	1.1	0.2	-1.3	0.0
					592	-0.5	-0.4	1.0	-0.1	0.1	0.0
					599	-0.7	0.2	-2.0	-0.6	0.4	0.0
					598	0.2	0.2	1.2	-0.2	-1.1	0.0
560	1	1	SX (RS)		592	0.6	0.1	0.6	0.2	0.9	0.0
					593	0.4	0.3	0.4	0.3	1.3	0.0
					600	0.7	0.1	1.2	0.4	1.2	0.0
					599	0.4	0.3	0.6	0.5	1.0	0.0
			SY (RS)		592	0.7	0.5	0.4	0.4	0.1	0.0
					593	0.5	0.6	0.3	0.4	0.1	0.0
					600	0.8	0.5	0.2	0.5	0.2	0.0
					599	0.4	0.6	0.2	0.4	0.1	0.0
			RC ENV~1	Max	592	1.1	0.3	3.8	1.5	-0.0	0.0
					593	0.2	0.4	2.4	1.1	1.1	0.0
					600	0.4	0.7	-0.7	0.6	1.4	0.0
					599	0.8	0.9	3.3	0.8	0.4	0.0
				Min	592	-0.4	-0.7	1.2	-0.2	-1.8	0.0
					593	-0.7	-0.9	0.4	-0.6	-1.5	0.0
					600	-1.2	-0.3	-4.8	-0.5	-1.0	0.0
					599	-0.2	-0.3	1.7	-0.3	-1.7	0.0
			RC ENV~2	Max	592	0.8	-0.1	2.7	1.0	-0.4	0.0
					593	-0.2	-0.1	1.7	0.7	0.0	0.0
					600	-0.2	0.2	-1.8	0.2	0.3	0.0
					599	0.5	0.5	2.6	0.6	-0.0	0.0
				Min	592	0.2	-0.2	1.7	0.2	-1.0	0.0
					593	-0.5	-0.5	0.8	-0.2	-0.8	0.0
					600	-0.8	0.1	-3.5	-0.3	-0.5	0.0
					599	0.2	0.2	1.5	-0.1	-0.7	0.0
561	1	1	SX (RS)		593	0.8	0.4	1.0	0.2	1.2	0.0
					594	0.2	0.4	1.1	0.1	1.4	0.0
					601	1.0	0.5	1.9	0.7	1.7	0.0
					600	0.3	0.4	0.1	0.6	1.3	0.0
			SY (RS)		593	0.9	0.9	0.9	0.5	0.2	0.0
					594	0.7	0.5	0.3	0.6	0.2	0.0
					601	1.0	1.0	1.4	0.9	0.4	0.0
					600	0.5	0.6	0.6	0.7	0.1	0.0
			RC ENV~1	Max	593	1.4	0.8	6.1	1.4	1.1	0.0
					594	0.5	0.2	3.5	1.1	0.1	0.0
					601	0.5	1.0	-2.1	1.4	0.6	0.0
					600	0.8	0.9	3.7	1.6	1.5	0.0
				Min	593	-0.5	-0.9	1.9	-0.3	-1.4	0.0
					594	-0.8	-0.7	0.2	-0.8	-3.1	0.0
					601	-1.6	-1.1	-9.0	-0.3	-2.9	0.0
					600	-0.3	-0.3	2.2	0.1	-1.2	0.0
			RC ENV~2	Max	593	1.0	0.2	4.4	0.9	0.4	0.0
					594	-0.1	-0.1	2.5	0.7	-1.0	0.0
					601	-0.1	0.1	-3.4	0.9	-0.8	0.0
					600	0.4	0.6	3.1	1.2	0.8	0.0
				Min	593	0.1	-0.1	2.8	0.2	-0.3	0.0

					594	-0.2	-0.4	1.2	-0.2	-2.2	0.0
					601	-1.2	-0.3	-6.5	0.1	-2.1	0.0
					600	0.1	0.1	1.9	0.2	-0.0	0.0
562	1	1	SX (RS)		594	0.5	0.4	0.5	0.3	1.6	0.0
					224	0.2	0.5	1.6	0.1	0.3	0.0
					227	0.4	0.4	3.8	0.4	0.4	0.0
					601	0.2	0.4	5.0	0.5	1.6	0.0
			SY (RS)		594	0.6	1.2	1.6	0.5	0.3	0.0
					224	0.7	0.4	1.1	0.6	0.6	0.0
					227	0.5	1.4	3.2	1.3	0.6	0.0
					601	0.8	0.2	1.5	1.2	0.1	0.0
			RC ENV~1	Max	594	0.9	1.2	6.6	1.2	2.9	0.0
					224	0.7	0.2	4.4	1.2	-1.5	0.0
					227	0.3	1.4	2.0	2.0	-1.1	0.0
					601	0.8	0.6	5.2	2.2	3.6	0.0
				Min	594	-0.3	-1.2	1.7	-0.4	-0.5	0.0
					224	-0.8	-0.7	-0.1	-0.7	-3.4	0.0
					227	-0.7	-1.3	-5.7	-0.5	-3.1	0.0
					601	-0.8	-0.2	-4.8	-0.2	-0.0	0.0
			RC ENV~2	Max	594	0.6	0.2	4.8	0.8	2.1	0.0
					224	0.0	-0.0	3.1	0.8	-2.0	0.0
					227	-0.1	0.0	-1.2	1.0	-1.7	0.0
					601	0.1	0.4	1.0	1.4	2.6	0.0
				Min	594	0.1	-0.0	3.3	0.1	0.9	0.0
					224	-0.1	-0.4	1.1	-0.1	-2.5	0.0
					227	-0.5	-0.2	-2.9	0.4	-2.3	0.0
					601	-0.1	0.1	-2.9	0.5	1.2	0.0
563	1	1	SX (RS)		552	0.2	0.8	2.4	0.4	1.4	0.0
					595	1.8	0.9	7.9	0.8	1.7	0.0
					602	0.9	0.9	4.6	1.0	1.6	0.0
					12	2.8	1.1	10.1	2.3	9.1	0.0
			SY (RS)		552	1.3	1.5	5.4	2.1	1.2	0.0
					595	1.2	2.3	8.2	2.2	0.7	0.0
					602	1.2	0.1	2.4	2.1	0.5	0.0
					12	1.4	3.9	11.2	9.6	2.5	0.0
			RC ENV~1	Max	552	1.6	1.3	9.6	2.1	5.6	0.0
					595	1.5	2.1	18.8	1.9	2.1	0.0
					602	0.9	1.2	8.2	6.0	2.1	0.0
					12	3.1	4.1	-0.7	13.0	11.8	0.0
				Min	552	-1.1	-1.7	-1.1	-2.1	0.3	0.0
					595	-2.0	-2.5	-0.9	-2.4	-1.5	0.0
					602	-1.4	-0.7	-1.1	0.2	-1.0	0.0
					12	-2.6	-3.7	-29.2	-6.2	-6.4	-0.0
			RC ENV~2	Max	552	0.4	-0.1	6.7	0.6	4.0	0.0
					595	0.1	-0.1	13.3	-0.1	0.4	0.0
					602	0.0	0.5	4.6	4.3	0.7	0.0
					12	0.9	0.4	-9.7	6.5	6.5	0.0
				Min	552	0.2	-0.4	3.8	-0.2	1.5	0.0
					595	-0.7	-0.4	6.9	-0.8	-0.9	0.0
					602	-0.5	0.1	0.3	2.0	-0.2	0.0
					12	-0.2	0.0	-21.0	3.3	1.6	-0.0
564	1	1	SX (RS)		595	0.4	0.5	1.3	0.2	1.6	0.0
					596	1.0	0.2	2.2	0.2	0.6	0.0
					603	0.5	0.4	1.2	1.0	0.7	0.0
					602	1.1	0.1	4.5	1.2	1.5	0.0

			SY (RS)	595	0.3	0.6	6.3	1.3	0.3	0.0
				596	0.5	0.4	0.3	1.3	0.1	0.0
				603	0.4	0.4	1.8	0.2	0.3	0.0
				602	0.4	0.3	4.8	0.9	0.2	0.0
		RC ENV~1	Max	595	0.7	0.4	5.7	0.7	1.5	0.0
				596	0.7	0.2	9.1	0.9	1.6	0.0
				603	0.3	0.7	3.4	1.9	1.9	0.0
				602	1.3	0.6	3.8	3.3	2.0	0.0
			Min	595	-0.2	-0.9	-6.9	-1.9	-1.8	0.0
				596	-1.2	-0.6	0.9	-1.7	-0.3	0.0
				603	-0.7	-0.1	-2.2	-0.5	0.4	0.0
				602	-0.8	-0.0	-5.7	-0.2	-1.7	0.0
		RC ENV~2	Max	595	0.5	-0.2	-0.6	0.0	0.9	0.0
				596	-0.1	-0.2	6.4	-0.4	1.0	0.0
				603	-0.1	0.5	1.9	1.4	1.2	0.0
				602	0.6	0.4	0.3	2.3	1.3	0.0
			Min	595	0.1	-0.5	-1.4	-1.1	-0.3	0.0
				596	-0.6	-0.4	2.9	-1.0	0.0	0.0
				603	-0.5	0.2	-1.1	0.3	0.7	0.0
				602	0.1	0.2	-2.7	0.9	-0.2	0.0
565	1	1	SX (RS)	596	0.4	0.2	0.6	0.5	0.8	0.0
				597	0.7	0.2	0.8	0.3	0.5	0.0
				604	0.4	0.2	0.8	0.5	0.6	0.0
				603	0.7	0.1	1.1	0.5	0.7	0.0
			SY (RS)	596	0.4	0.2	0.6	0.5	0.2	0.0
				597	0.4	0.5	0.8	0.7	0.1	0.0
				604	0.5	0.3	0.6	0.4	0.2	0.0
				603	0.4	0.5	0.4	1.0	0.2	0.0
		RC ENV~1	Max	596	0.7	-0.0	0.5	1.0	-0.2	0.0
				597	0.4	0.3	6.9	0.5	1.7	0.0
				604	0.2	0.6	1.5	0.7	1.9	0.0
				603	0.9	0.8	1.6	1.8	0.7	0.0
			Min	596	-0.2	-0.6	-0.9	-0.6	-1.8	0.0
				597	-0.9	-0.7	1.3	-0.9	0.0	0.0
				604	-0.7	-0.0	-2.9	-0.4	0.7	0.0
				603	-0.4	-0.3	-0.6	-0.6	-1.5	0.0
		RC ENV~2	Max	596	0.5	-0.2	0.1	0.6	-0.5	0.0
				597	-0.2	-0.2	4.8	0.0	1.2	0.0
				604	-0.2	0.4	0.8	0.5	1.4	0.0
				603	0.5	0.4	0.8	1.2	0.3	0.0
			Min	596	0.2	-0.4	-0.6	-0.2	-1.0	0.0
				597	-0.5	-0.4	2.0	-0.5	0.2	0.0
				604	-0.5	0.2	-1.7	-0.0	0.8	0.0
				603	0.2	0.2	-0.3	0.4	-0.8	0.0
566	1	1	SX (RS)	597	0.4	0.1	0.6	0.3	0.6	0.0
				598	0.6	0.2	0.7	0.3	0.7	0.0
				605	0.4	0.1	0.6	0.3	0.7	0.0
				604	0.6	0.2	0.7	0.3	0.6	0.0
			SY (RS)	597	0.5	0.3	0.7	0.4	0.1	0.0
				598	0.4	0.5	0.4	0.5	0.0	0.0
				605	0.5	0.3	0.2	0.4	0.2	0.0
				604	0.4	0.5	0.5	0.4	0.1	0.0
		RC ENV~1	Max	597	0.8	0.1	1.4	1.1	-0.7	0.0
				598	0.3	0.3	5.2	0.4	1.7	0.0
				605	0.3	0.6	0.6	0.4	1.9	0.0
				604	0.9	0.7	1.9	1.1	0.1	0.0

				Min	597	-0.3	-0.6	-0.2	-0.3	-1.9	0.0
					598	-0.8	-0.7	0.7	-0.6	-0.0	0.0
					605	-0.8	-0.1	-2.9	-0.4	0.5	0.0
					604	-0.3	-0.3	0.5	-0.3	-1.6	0.0
			RC ENV~2	Max	597	0.5	-0.2	1.0	0.7	-0.8	0.0
					598	-0.3	-0.2	3.6	0.2	1.1	0.0
					605	-0.2	0.4	0.1	0.3	1.3	0.0
					604	0.5	0.4	1.2	0.7	-0.1	0.0
				Min	597	0.2	-0.4	0.3	0.1	-1.3	0.0
					598	-0.5	-0.4	1.3	-0.2	0.2	0.0
					605	-0.5	0.2	-1.8	-0.1	0.6	0.0
					604	0.3	0.2	0.6	0.2	-1.1	0.0
567	1	1	SX (RS)		598	0.5	0.1	0.7	0.3	0.7	0.0
					599	0.5	0.2	0.6	0.4	1.0	0.0
					606	0.5	0.1	0.6	0.4	0.9	0.0
					605	0.5	0.2	0.5	0.4	0.7	0.0
			SY (RS)		598	0.6	0.4	0.4	0.4	0.1	0.0
					599	0.4	0.5	0.5	0.4	0.0	0.0
					606	0.6	0.4	0.3	0.4	0.2	0.0
					605	0.4	0.5	0.3	0.4	0.0	0.0
			RC ENV~1	Max	598	0.9	0.1	3.0	1.0	-0.6	0.0
					599	0.2	0.3	3.6	0.5	1.6	0.0
					606	0.3	0.6	0.1	0.7	1.8	0.0
					605	0.9	0.8	2.2	1.0	0.0	0.0
				Min	598	-0.3	-0.6	0.6	-0.3	-1.9	0.0
					599	-0.9	-0.8	0.2	-0.6	-0.4	0.0
					606	-0.9	-0.1	-3.2	-0.3	-0.2	0.0
					605	-0.2	-0.3	0.7	-0.2	-1.7	0.0
			RC ENV~2	Max	598	0.6	-0.2	2.1	0.7	-0.6	0.0
					599	-0.2	-0.2	2.4	0.3	0.7	0.0
					606	-0.2	0.4	-0.5	0.5	0.9	0.0
					605	0.6	0.4	1.8	0.7	-0.2	0.0
				Min	598	0.2	-0.4	1.2	0.0	-1.3	0.0
					599	-0.6	-0.4	0.7	-0.3	-0.1	0.0
					606	-0.6	0.2	-2.1	0.0	0.0	0.0
					605	0.2	0.2	0.8	0.2	-1.1	0.0
568	1	1	SX (RS)		599	0.7	0.1	0.7	0.4	0.9	0.0
					600	0.6	0.3	0.6	0.6	1.3	0.0
					607	0.7	0.1	0.9	0.6	1.2	0.0
					606	0.6	0.3	0.7	0.5	0.9	0.0
			SY (RS)		599	0.7	0.5	0.6	0.5	0.2	0.0
					600	0.4	0.5	0.5	0.4	0.1	0.0
					607	0.7	0.5	0.3	0.6	0.3	0.0
					606	0.4	0.5	0.4	0.4	0.1	0.0
			RC ENV~1	Max	599	1.1	0.2	4.8	0.7	-0.0	0.0
					600	0.2	0.3	2.0	0.3	1.2	0.0
					607	0.3	0.7	-0.5	1.5	1.3	0.0
					606	1.0	0.8	3.1	1.4	0.3	0.0
				Min	599	-0.3	-0.7	1.3	-0.6	-1.8	0.0
					600	-1.0	-0.8	-0.5	-1.1	-1.4	0.0
					607	-1.2	-0.2	-4.0	-0.2	-1.3	0.0
					606	-0.3	-0.3	0.9	-0.1	-1.7	0.0
			RC ENV~2	Max	599	0.8	-0.2	3.4	0.4	-0.2	0.0
					600	-0.2	-0.1	1.3	0.1	-0.0	0.0
					607	-0.1	0.4	-1.3	1.0	0.2	0.0
					606	0.7	0.4	2.6	1.0	0.1	0.0

				Min	599	0.1	-0.4	2.0	-0.2	-1.0	0.0
					600	-0.7	-0.5	0.0	-0.7	-0.9	0.0
					607	-0.8	0.2	-2.8	0.3	-0.8	0.0
					606	0.2	0.2	1.0	0.4	-0.8	0.0
569	1	1	SX (RS)		600	1.1	0.1	1.7	0.4	1.2	0.0
					601	0.7	0.6	0.9	0.4	2.0	0.0
					608	1.2	0.2	3.4	1.1	1.9	0.0
					607	0.8	0.5	1.0	1.0	1.2	0.0
			SY (RS)		600	0.9	0.5	0.7	0.8	0.2	0.0
					601	0.4	0.8	3.3	0.8	0.3	0.0
					608	0.9	0.4	2.6	0.4	0.4	0.0
					607	0.5	0.7	0.8	0.1	0.1	0.0
			RC ENV~1	Max	600	1.7	0.3	8.1	0.4	0.9	0.0
					601	0.3	0.5	3.2	-0.1	0.4	0.0
					608	0.6	0.6	-0.5	3.2	0.6	0.0
					607	1.3	1.0	4.9	2.8	1.2	0.0
				Min	600	-0.6	-0.7	1.9	-1.2	-1.4	0.0
					601	-1.2	-1.2	-3.4	-1.7	-3.9	0.0
					608	-1.8	-0.1	-9.4	0.1	-3.6	0.0
					607	-0.4	-0.3	1.8	0.1	-1.3	0.0
			RC ENV~2	Max	600	1.2	-0.1	5.8	-0.0	0.6	0.0
					601	-0.1	-0.1	0.6	-0.3	-1.2	0.0
					608	-0.1	0.4	-2.9	2.3	-1.0	0.0
					607	0.9	0.6	3.8	2.0	0.7	0.0
				Min	600	0.1	-0.3	3.4	-0.7	-0.3	0.0
					601	-0.8	-0.7	-0.1	-1.2	-2.8	0.0
					608	-1.3	0.1	-6.8	0.9	-2.5	0.0
					607	0.1	0.1	1.8	0.8	-0.1	0.0
570	1	1	SX (RS)		601	2.0	0.8	5.9	0.8	2.1	0.0
					227	0.2	0.9	1.9	0.2	1.8	0.0
					13	3.1	0.9	7.5	2.0	7.6	0.0
					608	1.2	1.0	3.4	1.0	1.9	0.0
			SY (RS)		601	1.5	2.0	4.7	1.3	0.6	0.0
					227	1.3	0.9	2.9	1.3	0.6	0.0
					13	1.8	3.3	5.8	5.2	2.1	0.0
					608	1.1	0.5	1.5	1.2	0.3	0.0
			RC ENV~1	Max	601	3.0	2.2	20.4	0.6	3.3	0.0
					227	1.1	0.5	4.4	0.7	-1.9	0.0
					13	1.7	3.0	-5.6	8.6	1.2	0.0
					608	1.8	1.6	11.2	5.6	3.3	0.0
				Min	601	-1.1	-1.9	2.7	-2.0	-0.9	0.0
					227	-1.4	-1.4	-1.5	-1.9	-7.6	0.0
					13	-4.6	-3.5	-31.1	-1.8	-16.1	-0.0
					608	-0.7	-0.5	2.8	1.3	-0.6	0.0
			RC ENV~2	Max	601	2.1	0.6	14.7	-0.2	2.3	0.0
					227	-0.0	0.0	3.0	-0.1	-3.2	0.0
					13	-0.1	-0.0	-10.9	6.0	-4.4	-0.0
					608	1.3	1.2	8.4	4.1	2.3	0.0
				Min	601	0.1	-0.0	7.6	-1.1	0.9	0.0
					227	-0.2	-0.9	1.4	-0.6	-5.6	0.0
					13	-3.2	-0.9	-22.4	3.0	-11.5	-0.0
					608	0.0	0.1	3.9	2.1	0.9	0.0
571	1	1	SX (RS)		553	1.2	0.3	3.4	1.1	1.9	0.0
					554	0.8	0.4	1.0	1.0	1.2	0.0
					610	1.1	0.2	1.8	0.4	1.2	0.0
					609	0.7	0.5	0.8	0.4	2.0	0.0

			SY (RS)	553	0.6	0.3	3.0	1.1	0.2	0.0
				554	0.7	0.5	0.9	0.7	0.3	0.0
				610	0.6	0.5	0.2	0.3	0.1	0.0
				609	0.6	0.7	3.4	0.1	0.4	0.0
		RC ENV~1	Max	553	2.4	0.1	-1.3	0.5	2.7	0.0
				554	0.4	0.2	6.8	0.5	2.0	0.0
				610	0.5	0.6	8.0	-0.1	2.6	0.0
				609	1.3	1.3	3.5	0.7	3.0	0.0
			Min	553	-0.6	-0.5	-11.7	-2.2	-1.2	0.0
				554	-1.5	-1.1	2.1	-2.1	-0.4	0.0
				610	-2.2	-0.3	2.8	-1.5	-0.1	0.0
				609	-0.4	-0.3	-3.3	-0.5	-0.9	0.0
		RC ENV~2	Max	553	1.7	-0.1	-3.4	0.2	1.5	0.0
				554	0.2	-0.1	4.9	0.1	1.4	0.0
				610	0.2	0.3	6.0	-0.3	1.8	0.0
				609	0.9	0.9	1.1	0.5	2.1	0.0
			Min	553	-0.2	-0.3	-8.4	-1.5	-0.3	0.0
				554	-1.0	-0.8	3.0	-1.5	0.5	0.0
				610	-1.5	0.1	3.3	-1.0	1.0	0.0
				609	-0.1	0.0	0.0	-0.3	0.1	0.0
572	1	1	SX (RS)	554	0.7	0.2	1.1	0.6	1.2	0.0
				555	0.6	0.2	0.9	0.6	0.9	0.0
				611	0.7	0.2	0.6	0.4	0.9	0.0
				610	0.5	0.2	0.4	0.6	1.3	0.0
			SY (RS)	554	0.4	0.6	0.6	0.2	0.1	0.0
				555	0.6	0.4	0.6	0.4	0.2	0.0
				611	0.5	0.5	0.5	0.3	0.0	0.0
				610	0.6	0.4	0.4	0.3	0.3	0.0
		RC ENV~1	Max	554	1.5	0.4	-1.2	1.1	0.4	0.0
				555	0.3	0.1	4.9	0.7	2.9	0.0
				611	0.3	0.7	4.2	-0.5	3.8	0.0
				610	1.0	0.9	2.3	0.1	0.6	0.0
			Min	554	-0.3	-0.7	-5.9	-0.4	-2.4	0.0
				555	-1.1	-0.8	1.0	-0.6	0.7	0.0
				611	-1.5	-0.4	2.2	-1.9	1.0	0.0
				610	-0.3	-0.1	0.1	-1.1	-2.0	0.0
		RC ENV~2	Max	554	1.1	-0.1	-2.2	0.7	-0.8	0.0
				555	0.1	-0.2	3.5	0.4	2.1	0.0
				611	0.1	0.3	3.2	-0.7	2.7	0.0
				610	0.7	0.6	1.6	0.0	-0.3	0.0
			Min	554	-0.1	-0.3	-4.2	-0.2	-1.7	0.0
				555	-0.8	-0.6	1.9	-0.4	1.5	0.0
				611	-1.0	0.1	1.9	-1.4	1.8	0.0
				610	-0.1	0.1	0.5	-0.8	-1.3	0.0
573	1	1	SX (RS)	555	0.6	0.2	0.9	0.4	0.9	0.0
				556	0.4	0.1	0.9	0.4	0.7	0.0
				612	0.6	0.2	0.4	0.3	0.6	0.0
				611	0.4	0.1	0.2	0.4	1.0	0.0
			SY (RS)	555	0.4	0.5	0.6	0.4	0.0	0.0
				556	0.6	0.3	0.5	0.4	0.2	0.0
				612	0.4	0.5	0.4	0.4	0.1	0.0
				611	0.5	0.3	0.4	0.3	0.2	0.0
		RC ENV~1	Max	555	1.2	0.3	-0.3	1.5	-0.8	0.0
				556	0.3	0.0	3.6	0.8	3.3	0.0
				612	0.2	0.7	2.5	-0.7	4.3	0.0
				611	0.8	0.8	3.7	-0.5	-0.6	0.0

				Min	555	-0.2	-0.7	-4.2	0.1	-3.7	0.0
					556	-0.9	-0.7	0.1	-0.1	1.3	0.0
					612	-1.1	-0.3	0.7	-2.1	1.6	0.0
					611	-0.3	-0.0	0.9	-1.3	-2.9	0.0
			RC ENV~2	Max	555	0.8	-0.1	-1.2	1.0	-1.7	0.0
					556	0.0	-0.2	2.5	0.5	2.5	0.0
					612	-0.0	0.3	2.1	-1.0	3.1	0.0
					611	0.6	0.5	2.6	-0.5	-1.4	0.0
				Min	555	0.0	-0.3	-2.9	0.3	-2.7	0.0
					556	-0.6	-0.5	0.9	-0.0	2.0	0.0
					612	-0.8	0.1	0.8	-1.5	2.2	0.0
					611	-0.0	0.2	1.3	-1.0	-2.1	0.0
574	1	1	SX (RS)		556	0.5	0.2	0.9	0.4	0.7	0.0
					557	0.4	0.1	1.0	0.4	0.6	0.0
					613	0.5	0.1	0.3	0.3	0.6	0.0
					612	0.4	0.1	0.4	0.3	0.7	0.0
			SY (RS)		556	0.3	0.5	0.5	0.5	0.1	0.0
					557	0.5	0.3	0.8	0.4	0.1	0.0
					613	0.3	0.5	0.7	0.4	0.1	0.0
					612	0.5	0.3	0.4	0.3	0.2	0.0
			RC ENV~1	Max	556	1.0	0.3	0.4	1.5	-1.5	0.0
					557	0.3	-0.0	2.6	0.8	3.0	0.0
					613	0.2	0.7	2.0	-0.6	4.1	0.0
					612	0.7	0.7	5.2	-0.6	-1.3	0.0
				Min	556	-0.2	-0.7	-2.9	0.1	-4.3	0.0
					557	-0.7	-0.7	-0.8	-0.2	1.4	0.0
					613	-0.9	-0.3	-0.8	-2.0	1.6	0.0
					612	-0.3	0.0	1.7	-1.2	-3.4	0.0
			RC ENV~2	Max	556	0.7	-0.2	-0.3	1.1	-2.1	0.0
					557	-0.0	-0.2	1.7	0.4	2.3	0.0
					613	-0.1	0.3	1.3	-0.9	3.0	0.0
					612	0.5	0.5	3.7	-0.6	-2.0	0.0
				Min	556	0.1	-0.3	-1.9	0.5	-3.1	0.0
					557	-0.5	-0.5	0.0	-0.1	2.0	0.0
					613	-0.7	0.2	-0.3	-1.5	2.2	0.0
					612	0.0	0.2	2.1	-1.0	-2.6	0.0
575	1	1	SX (RS)		557	0.6	0.1	1.0	0.5	0.5	0.0
					558	0.5	0.2	1.2	0.5	0.7	0.0
					614	0.6	0.1	0.4	0.5	0.8	0.0
					613	0.4	0.1	0.7	0.3	0.6	0.0
			SY (RS)		557	0.3	0.5	0.8	0.5	0.2	0.0
					558	0.5	0.3	0.7	0.2	0.2	0.0
					614	0.3	0.4	0.7	0.4	0.3	0.0
					613	0.5	0.3	0.7	0.2	0.2	0.0
			RC ENV~1	Max	557	0.9	0.3	1.4	1.2	-1.7	0.0
					558	0.3	0.1	1.2	0.6	2.3	0.0
					614	0.3	0.7	1.3	-0.3	3.3	0.0
					613	0.7	0.7	7.1	-0.3	-1.6	0.0
				Min	557	-0.3	-0.7	-1.6	-0.1	-4.3	0.0
					558	-0.7	-0.7	-2.1	-0.9	0.9	0.0
					614	-0.8	-0.2	-2.3	-1.6	0.9	0.0
					613	-0.3	-0.0	2.2	-1.1	-3.3	0.0
			RC ENV~2	Max	557	0.6	-0.2	0.6	0.8	-2.2	0.0
					558	-0.1	-0.2	0.6	0.1	1.6	0.0
					614	-0.1	0.4	0.7	-0.5	2.4	0.0
					613	0.4	0.5	5.0	-0.3	-2.1	0.0

				Min	557	0.1	-0.4	-1.0	0.1	-3.1	0.0
					558	-0.5	-0.5	-1.3	-0.6	1.5	0.0
					614	-0.6	0.2	-1.4	-1.1	1.7	0.0
					613	0.1	0.2	2.9	-0.8	-2.5	0.0
576	1	1	SX (RS)		558	0.7	0.2	1.2	1.0	0.7	0.0
					559	0.8	0.2	4.4	1.2	1.5	0.0
					615	0.6	0.3	1.1	0.2	1.6	0.0
					614	0.7	0.1	2.3	0.3	0.6	0.0
			SY (RS)		558	0.3	0.6	1.5	1.1	0.3	0.0
					559	0.5	0.0	5.4	1.9	0.1	0.0
					615	0.2	0.8	6.3	0.4	0.1	0.0
					614	0.7	0.2	0.5	0.5	0.1	0.0
			RC ENV~1	Max	558	1.0	0.3	3.1	0.8	-1.2	0.0
					559	0.6	-0.1	2.6	1.3	2.2	0.0
					615	0.4	1.0	6.4	0.9	2.1	0.0
					614	0.9	0.6	10.1	0.6	-1.2	0.0
				Min	558	-0.5	-0.8	0.2	-1.3	-3.6	0.0
					559	-1.0	-0.6	-8.1	-2.7	-0.9	0.0
					615	-0.9	-0.6	-6.2	-0.5	-1.0	0.0
					614	-0.5	0.0	1.9	-0.9	-2.5	0.0
			RC ENV~2	Max	558	0.5	-0.2	2.3	0.1	-1.8	0.0
					559	-0.2	-0.2	-1.1	-0.7	0.7	0.0
					615	-0.2	0.4	0.1	0.6	1.0	0.0
					614	0.4	0.5	7.1	0.3	-1.8	0.0
				Min	558	0.2	-0.4	0.4	-0.9	-2.6	0.0
					559	-0.4	-0.4	-4.5	-1.9	-0.2	0.0
					615	-0.5	0.2	-2.5	-0.3	-0.1	0.0
					614	0.2	0.2	4.1	-0.4	-1.9	0.0
577	1	1	SX (RS)		559	1.1	0.7	4.4	1.0	1.5	0.0
					12	2.6	0.8	9.9	2.4	9.1	0.0
					616	0.1	0.6	2.7	0.4	1.4	0.0
					615	1.5	0.7	8.2	0.8	1.7	0.0
			SY (RS)		559	1.0	0.3	2.9	0.8	0.6	0.0
					12	1.5	3.8	9.1	8.2	1.9	0.0
					616	1.2	1.4	4.7	1.2	0.7	0.0
					615	1.3	2.2	7.3	1.3	0.6	0.0
			RC ENV~1	Max	559	1.4	0.5	8.3	-1.2	0.5	0.0
					12	2.3	3.5	-4.0	4.9	6.4	0.0
					616	0.9	1.7	9.1	0.7	-0.4	0.0
					615	1.7	2.4	20.1	0.9	0.8	0.0
				Min	559	-0.9	-0.9	-0.6	-5.5	-2.5	0.0
					12	-2.8	-4.1	-30.7	-11.5	-11.9	-0.0
					616	-1.4	-1.2	-0.2	-1.7	-5.4	0.0
					615	-1.3	-1.9	0.7	-1.7	-2.7	0.0
			RC ENV~2	Max	559	0.5	-0.1	6.0	-2.0	-0.6	0.0
					12	0.1	-0.1	-12.6	-3.2	-2.0	0.0
					616	-0.1	0.5	5.7	-0.0	-1.7	0.0
					615	0.5	0.6	14.4	0.4	-0.3	0.0
				Min	559	0.2	-0.5	2.8	-3.9	-1.6	0.0
					12	-0.6	-0.6	-22.3	-5.9	-6.3	-0.0
					616	-0.5	0.2	1.4	-0.7	-3.8	0.0
					615	0.0	0.1	8.6	-0.4	-1.0	0.0
578	1	1	SX (RS)		177	0.4	0.4	4.0	0.4	0.3	0.0
					609	0.2	0.3	5.2	0.5	1.5	0.0
					617	0.5	0.4	0.7	0.2	1.6	0.0
					180	0.1	0.4	1.6	0.4	0.4	0.0

			SY (RS)	177	0.3	1.3	2.5	0.6	0.6	0.0
				609	0.8	0.3	0.9	0.4	0.3	0.0
				617	0.4	1.1	1.5	0.3	0.2	0.0
				180	0.7	0.4	0.9	0.3	0.4	0.0
		RC ENV~1	Max	177	0.9	1.3	1.3	0.8	2.0	0.0
				609	0.8	0.0	5.8	0.3	0.7	0.0
				617	0.2	1.1	6.2	-0.8	1.1	0.0
				180	0.7	0.9	4.2	-0.4	2.7	0.0
			Min	177	-0.2	-1.3	-6.7	-0.6	0.8	0.0
				609	-0.7	-0.8	-4.7	-1.1	-2.4	0.0
				617	-1.1	-1.2	2.6	-2.0	-2.0	0.0
				180	-0.7	-0.1	-0.5	-1.3	1.3	0.0
		RC ENV~2	Max	177	0.6	0.1	-2.0	0.5	1.4	0.0
				609	0.2	-0.1	3.2	0.1	-0.1	0.0
				617	0.0	0.2	4.7	-1.1	0.5	0.0
				180	0.0	0.6	2.9	-0.8	2.0	0.0
			Min	177	-0.0	-0.1	-4.3	-0.2	1.0	0.0
				609	-0.1	-0.6	-2.1	-0.7	-1.7	0.0
				617	-0.8	-0.2	3.6	-1.5	-1.0	0.0
				180	-0.1	0.1	0.5	-1.0	1.5	0.0
579	1	1	SX (RS)	609	1.0	0.5	2.0	0.7	1.6	0.0
				610	0.3	0.3	0.8	0.6	1.3	0.0
				618	0.8	0.4	1.2	0.1	1.2	0.0
				617	0.1	0.2	1.1	0.3	1.4	0.0
			SY (RS)	609	0.8	1.0	1.2	0.3	0.3	0.0
				610	0.6	0.5	0.4	0.1	0.3	0.0
				618	0.7	0.8	0.8	0.3	0.2	0.0
				617	0.6	0.4	0.5	0.2	0.2	0.0
		RC ENV~1	Max	609	2.1	1.0	-2.6	1.3	2.1	0.0
				610	0.5	0.1	5.8	0.8	2.0	0.0
				618	0.3	0.7	5.9	-1.0	2.7	0.0
				617	0.6	0.9	3.7	-0.6	2.1	0.0
			Min	609	-0.5	-0.9	-10.7	-0.4	-1.2	0.0
				610	-0.7	-1.1	2.2	-0.7	-0.7	0.0
				618	-1.7	-0.8	2.3	-2.3	-0.1	0.0
				617	-0.6	-0.1	0.1	-1.3	-0.7	0.0
		RC ENV~2	Max	609	1.4	0.4	-3.8	0.9	1.1	0.0
				610	0.1	-0.1	4.2	0.5	1.3	0.0
				618	0.1	0.2	4.4	-1.3	1.9	0.0
				617	0.1	0.6	2.6	-0.8	1.4	0.0
			Min	609	-0.2	-0.2	-7.7	-0.1	-0.5	0.0
				610	-0.3	-0.8	3.0	-0.5	0.2	0.0
				618	-1.2	-0.3	2.6	-1.7	1.0	0.0
				617	-0.0	0.1	0.9	-1.0	-0.0	0.0
580	1	1	SX (RS)	610	0.7	0.2	1.4	0.4	1.1	0.0
				611	0.3	0.2	1.0	0.5	1.0	0.0
				619	0.6	0.2	0.7	0.2	0.8	0.0
				618	0.3	0.2	0.4	0.3	1.3	0.0
			SY (RS)	610	0.5	0.4	0.6	0.3	0.1	0.0
				611	0.5	0.4	0.4	0.3	0.2	0.0
				619	0.5	0.5	0.4	0.4	0.1	0.0
				618	0.5	0.4	0.5	0.3	0.2	0.0
		RC ENV~1	Max	610	1.5	0.3	-1.1	1.8	0.1	0.0
				611	0.4	0.1	5.2	1.2	2.9	0.0
				619	0.2	0.6	3.2	-1.1	3.9	0.0

					618	0.6	0.9	3.0	-0.7	0.6	0.0
				Min	610	-0.3	-0.5	-6.4	0.5	-2.7	0.0
					611	-0.7	-0.9	1.4	0.1	0.6	0.0
					619	-1.3	-0.4	1.6	-2.5	1.0	0.0
					618	-0.4	-0.1	0.5	-1.5	-1.9	0.0
			RC ENV~2	Max	610	1.0	-0.0	-2.3	1.3	-0.9	0.0
					611	0.1	-0.2	3.8	0.9	2.1	0.0
					619	0.0	0.2	2.5	-1.4	2.8	0.0
					618	0.3	0.7	2.1	-0.8	-0.3	0.0
				Min	610	-0.1	-0.2	-4.5	0.7	-1.9	0.0
					611	-0.4	-0.7	2.3	0.2	1.4	0.0
					619	-0.9	0.0	1.4	-1.8	1.8	0.0
					618	-0.1	0.2	0.9	-1.1	-1.3	0.0
581	1	1	SX (RS)		611	0.5	0.2	1.1	0.3	0.9	0.0
					612	0.3	0.1	1.1	0.4	0.7	0.0
					620	0.5	0.2	0.4	0.2	0.6	0.0
					619	0.3	0.1	0.1	0.3	1.0	0.0
			SY (RS)		611	0.4	0.5	0.5	0.3	0.1	0.0
					612	0.5	0.3	0.5	0.3	0.2	0.0
					620	0.4	0.5	0.4	0.4	0.2	0.0
					619	0.5	0.3	0.4	0.3	0.2	0.0
			RC ENV~1	Max	611	1.1	0.3	0.0	2.1	-1.0	0.0
					612	0.4	0.0	3.9	1.3	3.5	0.0
					620	0.2	0.6	2.1	-1.1	4.4	0.0
					619	0.6	0.8	3.6	-0.9	-0.6	0.0
				Min	611	-0.2	-0.6	-4.0	0.7	-3.9	0.0
					612	-0.7	-0.8	0.3	0.6	1.3	0.0
					620	-1.0	-0.4	0.4	-2.5	1.6	0.0
					619	-0.4	-0.0	0.8	-1.7	-3.0	0.0
			RC ENV~2	Max	611	0.8	-0.1	-1.0	1.5	-1.8	0.0
					612	0.0	-0.2	2.7	1.0	2.6	0.0
					620	0.0	0.2	1.7	-1.5	3.2	0.0
					619	0.4	0.6	2.5	-1.0	-1.4	0.0
				Min	611	0.0	-0.2	-2.8	1.0	-2.8	0.0
					612	-0.4	-0.6	1.3	0.6	2.0	0.0
					620	-0.7	0.1	0.5	-1.9	2.2	0.0
					619	-0.1	0.2	1.2	-1.3	-2.2	0.0
582	1	1	SX (RS)		612	0.5	0.2	1.0	0.3	0.6	0.0
					613	0.3	0.1	1.3	0.3	0.5	0.0
					621	0.4	0.2	0.4	0.2	0.5	0.0
					620	0.3	0.1	0.2	0.2	0.7	0.0
			SY (RS)		612	0.3	0.5	0.4	0.4	0.2	0.0
					613	0.5	0.3	0.4	0.3	0.2	0.0
					621	0.4	0.5	0.4	0.4	0.2	0.0
					620	0.5	0.3	0.5	0.3	0.2	0.0
			RC ENV~1	Max	612	0.9	0.3	1.0	2.0	-1.5	0.0
					613	0.4	-0.0	2.5	1.3	3.3	0.0
					621	0.2	0.7	1.7	-1.1	4.1	0.0
					620	0.6	0.7	4.5	-1.0	-1.3	0.0
				Min	612	-0.2	-0.6	-2.3	0.7	-4.4	0.0
					613	-0.7	-0.7	-1.0	0.7	1.5	0.0
					621	-0.9	-0.3	-0.6	-2.4	1.6	0.0
					620	-0.4	-0.0	1.2	-1.8	-3.5	0.0
			RC ENV~2	Max	612	0.6	-0.1	0.1	1.5	-2.2	0.0
					613	-0.0	-0.2	1.6	1.0	2.4	0.0
					621	-0.0	0.3	1.3	-1.4	2.9	0.0

				620	0.3	0.5	3.1	-1.1	-2.0	0.0
			Min	612	0.0	-0.3	-1.5	1.0	-3.2	0.0
				613	-0.4	-0.5	-0.0	0.6	2.1	0.0
				621	-0.6	0.1	-0.1	-1.8	2.1	0.0
				620	-0.0	0.2	1.6	-1.4	-2.6	0.0
583	1	1	SX (RS)	613	0.4	0.1	0.9	0.4	0.5	0.0
				614	0.4	0.1	1.7	0.3	0.6	0.0
				622	0.4	0.1	0.4	0.1	0.7	0.0
				621	0.3	0.1	0.5	0.2	0.5	0.0
			SY (RS)	613	0.3	0.5	0.3	0.3	0.2	0.0
				614	0.6	0.2	0.5	0.2	0.1	0.0
				622	0.3	0.5	0.7	0.2	0.1	0.0
				621	0.6	0.3	0.5	0.3	0.2	0.0
		RC ENV~1	Max	613	0.8	0.3	1.9	1.6	-1.6	0.0
				614	0.4	-0.0	0.5	1.1	2.4	0.0
				622	0.1	0.7	1.9	-1.0	3.2	0.0
				621	0.7	0.7	5.9	-1.1	-1.6	0.0
			Min	613	-0.2	-0.7	-0.8	0.5	-4.1	0.0
				614	-0.7	-0.7	-2.9	0.3	1.1	0.0
				622	-0.7	-0.4	-1.3	-2.1	0.9	0.0
				621	-0.4	0.0	1.6	-1.7	-3.4	0.0
		RC ENV~2	Max	613	0.5	-0.2	1.2	1.2	-2.1	0.0
				614	-0.1	-0.2	0.1	0.8	1.8	0.0
				622	-0.1	0.3	1.3	-1.2	2.3	0.0
				621	0.3	0.5	4.1	-1.1	-2.1	0.0
			Min	613	0.1	-0.3	-0.3	0.6	-3.0	0.0
				614	-0.4	-0.5	-2.2	0.3	1.7	0.0
				622	-0.5	0.2	-0.6	-1.6	1.5	0.0
				621	0.0	0.2	2.2	-1.4	-2.6	0.0
584	1	1	SX (RS)	614	0.3	0.1	0.7	0.5	0.7	0.0
				615	0.6	0.3	2.5	0.7	1.2	0.0
				623	0.2	0.1	1.3	0.2	0.8	0.0
				622	0.4	0.3	1.4	0.2	0.7	0.0
			SY (RS)	614	0.3	0.5	0.8	0.2	0.3	0.0
				615	0.9	0.9	1.7	0.6	0.5	0.0
				623	0.4	0.3	0.4	0.2	0.3	0.0
				622	0.8	0.7	1.3	0.2	0.2	0.0
		RC ENV~1	Max	614	0.7	0.3	3.0	0.9	-0.9	0.0
				615	0.7	0.6	-1.1	1.2	2.0	0.0
				623	0.2	0.6	3.1	-0.9	1.5	0.0
				622	1.0	0.9	8.1	-1.2	-1.2	0.0
			Min	614	-0.1	-0.7	0.9	-0.3	-3.3	0.0
				615	-1.1	-1.1	-8.0	-0.5	-0.3	0.0
				623	-0.7	-0.1	-1.3	-1.9	-0.1	0.0
				622	-0.6	-0.4	1.6	-1.7	-2.5	0.0
		RC ENV~2	Max	614	0.5	-0.2	2.3	0.6	-1.6	0.0
				615	-0.1	-0.2	-2.5	0.5	0.9	0.0
				623	-0.1	0.4	2.0	-1.1	1.0	0.0
				622	0.3	0.5	5.7	-1.0	-1.8	0.0
			Min	614	0.1	-0.4	0.9	-0.2	-2.4	0.0
				615	-0.3	-0.5	-5.8	-0.2	0.2	0.0
				623	-0.5	0.2	-0.5	-1.4	0.1	0.0
				622	0.1	0.2	3.0	-1.5	-1.9	0.0
585	1	1	SX (RS)	615	0.2	0.2	6.7	0.3	1.0	0.0
				616	0.2	0.1	5.0	0.2	1.4	0.0
				624	0.1	0.1	1.9	0.3	0.6	0.0

					623	0.1	0.2	0.2	0.1	1.1	0.0
				SY (RS)	615	0.6	0.4	0.7	1.0	0.1	0.0
					616	0.2	1.3	4.6	1.2	1.0	0.0
					624	0.5	0.6	1.5	0.2	0.9	0.0
					623	0.3	1.1	2.4	0.2	0.1	0.0
			RC ENV~1	Max	615	0.8	0.2	7.0	1.1	0.5	0.0
					616	0.0	1.1	1.7	1.3	1.0	0.0
					624	0.3	0.9	4.0	-1.0	0.8	0.0
					623	0.5	1.3	10.7	-0.8	0.3	0.0
				Min	615	-0.4	-0.7	-6.4	-1.0	-1.5	0.0
					616	-0.6	-1.6	-8.4	-1.3	-3.0	0.0
					624	-0.7	-0.4	-1.9	-1.8	-1.6	0.0
					623	-0.1	-0.8	1.7	-1.6	-1.9	0.0
			RC ENV~2	Max	615	0.5	-0.2	0.8	0.2	0.2	0.0
					616	-0.1	-0.2	-2.0	0.2	-0.3	0.0
					624	-0.1	0.4	2.4	-1.3	0.0	0.0
					623	0.4	0.5	7.5	-0.8	-0.1	0.0
				Min	615	0.1	-0.4	-1.2	-0.6	-0.9	0.0
					616	-0.4	-0.5	-5.6	-0.8	-2.0	0.0
					624	-0.5	0.2	-0.9	-1.4	-1.1	0.0
					623	0.1	0.2	4.1	-1.4	-0.9	0.0
586	1	1		SX (RS)	180	0.4	0.3	1.2	0.4	1.1	0.0
					617	0.1	0.2	1.3	0.3	1.0	0.0
					625	0.3	0.3	1.0	0.3	1.1	0.0
					183	0.1	0.2	1.0	0.4	0.7	0.0
				SY (RS)	180	0.3	0.7	0.8	0.2	0.2	0.0
					617	0.5	0.3	0.4	0.2	0.1	0.0
					625	0.3	0.6	0.7	0.5	0.1	0.0
					183	0.4	0.3	0.6	0.4	0.1	0.0
			RC ENV~1	Max	180	0.9	0.6	-1.4	1.6	2.7	0.0
					617	0.5	0.0	5.4	1.2	0.6	0.0
					625	0.1	0.7	5.2	-0.8	1.1	0.0
					183	0.4	0.8	0.6	-0.5	2.4	0.0
				Min	180	-0.1	-0.7	-4.9	0.4	0.5	0.0
					617	-0.5	-0.8	1.6	0.4	-1.3	0.0
					625	-0.8	-0.6	2.2	-2.3	-1.1	0.0
					183	-0.5	-0.0	-1.4	-1.8	0.8	0.0
			RC ENV~2	Max	180	0.7	0.0	-2.6	1.2	2.0	0.0
					617	0.0	-0.2	3.9	0.9	0.2	0.0
					625	0.0	0.1	3.9	-1.2	0.7	0.0
					183	-0.0	0.6	0.2	-1.0	1.8	0.0
				Min	180	-0.0	-0.1	-3.6	0.7	0.9	0.0
					617	-0.1	-0.5	2.6	0.7	-0.7	0.0
					625	-0.6	-0.1	2.7	-1.7	-0.3	0.0
					183	-0.0	0.1	-0.4	-1.3	1.2	0.0
587	1	1		SX (RS)	617	0.4	0.3	0.8	0.2	1.1	0.0
					618	0.1	0.1	1.0	0.3	1.2	0.0
					626	0.4	0.3	0.8	0.1	1.1	0.0
					625	0.1	0.1	0.7	0.3	1.1	0.0
				SY (RS)	617	0.5	0.7	0.9	0.3	0.1	0.0
					618	0.5	0.4	0.2	0.2	0.2	0.0
					626	0.5	0.6	0.5	0.5	0.2	0.0
					625	0.5	0.4	0.5	0.4	0.1	0.0
			RC ENV~1	Max	617	0.9	0.7	-1.6	2.1	1.2	0.0
					618	0.6	0.1	5.4	1.3	1.8	0.0

					626	0.3	0.6	3.5	-1.1	2.7	0.0
					625	0.5	0.7	1.8	-0.8	1.4	0.0
				Min	617	-0.2	-0.7	-5.5	0.9	-1.1	0.0
					618	-0.5	-0.7	2.0	0.6	-0.5	0.0
					626	-0.9	-0.6	1.4	-2.7	-0.0	0.0
					625	-0.5	-0.1	-0.3	-1.9	-0.7	0.0
			RC ENV~2	Max	617	0.7	0.1	-2.4	1.6	0.3	0.0
					618	0.1	-0.2	4.0	1.0	1.3	0.0
					626	-0.0	0.1	2.7	-1.5	1.9	0.0
					625	0.0	0.5	1.2	-1.1	0.7	0.0
				Min	617	0.0	-0.1	-4.0	1.2	-0.7	0.0
					618	-0.0	-0.5	2.9	0.8	0.3	0.0
					626	-0.6	-0.1	1.7	-2.0	1.0	0.0
					625	-0.1	0.2	0.3	-1.4	-0.2	0.0
588	1	1	SX (RS)		618	0.5	0.3	1.1	0.2	1.1	0.0
					619	0.2	0.1	0.9	0.3	1.0	0.0
					627	0.4	0.3	0.7	0.1	0.8	0.0
					626	0.2	0.1	0.5	0.3	1.1	0.0
			SY (RS)		618	0.6	0.5	0.7	0.3	0.1	0.0
					619	0.5	0.4	0.3	0.3	0.2	0.0
					627	0.6	0.5	0.4	0.5	0.2	0.0
					626	0.4	0.4	0.4	0.4	0.2	0.0
			RC ENV~1	Max	618	1.1	0.5	-0.7	2.4	0.0	0.0
					619	0.4	0.1	5.3	1.6	2.9	0.0
					627	0.3	0.5	2.2	-1.2	3.9	0.0
					626	0.4	0.7	2.5	-0.9	0.5	0.0
				Min	618	-0.2	-0.5	-5.1	1.1	-2.7	0.0
					619	-0.5	-0.8	1.7	0.8	0.5	0.0
					627	-1.0	-0.5	0.9	-2.9	1.0	0.0
					626	-0.5	-0.1	0.3	-1.9	-1.9	0.0
			RC ENV~2	Max	618	0.8	0.1	-1.7	1.8	-1.0	0.0
					619	0.1	-0.2	3.8	1.2	2.1	0.0
					627	0.0	0.1	1.7	-1.7	2.8	0.0
					626	0.1	0.5	1.8	-1.2	-0.4	0.0
				Min	618	-0.0	-0.1	-3.6	1.4	-1.9	0.0
					619	-0.2	-0.6	2.6	0.9	1.4	0.0
					627	-0.7	-0.1	0.8	-2.1	1.8	0.0
					626	-0.1	0.2	0.7	-1.4	-1.3	0.0
589	1	1	SX (RS)		619	0.4	0.2	1.0	0.2	0.8	0.0
					620	0.2	0.1	1.0	0.3	0.7	0.0
					628	0.4	0.2	0.5	0.1	0.6	0.0
					627	0.2	0.1	0.2	0.2	1.0	0.0
			SY (RS)		619	0.4	0.4	0.5	0.4	0.2	0.0
					620	0.4	0.3	0.3	0.3	0.2	0.0
					628	0.5	0.5	0.3	0.5	0.2	0.0
					627	0.4	0.4	0.4	0.4	0.2	0.0
			RC ENV~1	Max	619	0.9	0.4	0.3	2.5	-1.0	0.0
					620	0.4	0.1	4.2	1.8	3.5	0.0
					628	0.2	0.5	1.6	-1.2	4.3	0.0
					627	0.5	0.7	3.0	-1.0	-0.5	0.0
				Min	619	-0.2	-0.5	-3.2	1.1	-3.9	0.0
					620	-0.5	-0.7	0.8	1.0	1.2	0.0
					628	-0.8	-0.4	-0.1	-2.8	1.5	0.0
					627	-0.4	-0.1	0.5	-2.0	-3.0	0.0
			RC ENV~2	Max	619	0.7	-0.0	-0.6	1.9	-1.8	0.0
					620	0.1	-0.2	3.0	1.4	2.5	0.0

					628	-0.0	0.1	1.2	-1.7	3.1	0.0
					627	0.2	0.5	2.1	-1.3	-1.4	0.0
				Min	619	0.0	-0.1	-2.2	1.5	-2.8	0.0
					620	-0.2	-0.5	1.7	1.1	1.9	0.0
					628	-0.6	0.0	0.1	-2.1	2.1	0.0
					627	-0.1	0.2	0.9	-1.5	-2.2	0.0
590	1	1	SX (RS)		620	0.4	0.2	0.9	0.2	0.6	0.0
					621	0.2	0.1	1.1	0.2	0.5	0.0
					629	0.3	0.2	0.4	0.1	0.5	0.0
					628	0.2	0.1	0.1	0.2	0.7	0.0
			SY (RS)		620	0.4	0.5	0.4	0.4	0.2	0.0
					621	0.5	0.3	0.3	0.3	0.2	0.0
					629	0.4	0.5	0.3	0.5	0.1	0.0
					628	0.5	0.3	0.4	0.4	0.2	0.0
			RC ENV~1	Max	620	0.8	0.4	1.3	2.5	-1.5	0.0
					621	0.4	0.0	2.8	1.8	3.3	0.0
					629	0.2	0.6	1.3	-1.2	4.0	0.0
					628	0.5	0.6	3.8	-1.1	-1.2	0.0
				Min	620	-0.2	-0.6	-1.6	1.1	-4.3	0.0
					621	-0.6	-0.6	-0.4	1.1	1.5	0.0
					629	-0.7	-0.4	-0.8	-2.7	1.5	0.0
					628	-0.4	-0.0	0.7	-2.2	-3.5	0.0
			RC ENV~2	Max	620	0.5	-0.1	0.5	1.9	-2.1	0.0
					621	0.1	-0.2	1.9	1.5	2.5	0.0
					629	-0.0	0.2	1.0	-1.7	2.9	0.0
					628	0.2	0.5	2.6	-1.4	-1.9	0.0
				Min	620	0.0	-0.2	-0.9	1.5	-3.1	0.0
					621	-0.3	-0.5	0.4	1.2	2.0	0.0
					629	-0.5	0.1	-0.4	-2.0	2.0	0.0
					628	-0.1	0.2	1.2	-1.7	-2.6	0.0
591	1	1	SX (RS)		621	0.3	0.2	0.7	0.2	0.5	0.0
					622	0.2	0.1	1.2	0.2	0.5	0.0
					630	0.3	0.2	0.4	0.1	0.5	0.0
					629	0.2	0.1	0.4	0.2	0.5	0.0
			SY (RS)		621	0.4	0.5	0.1	0.3	0.2	0.0
					622	0.6	0.4	0.6	0.3	0.2	0.0
					630	0.4	0.5	0.3	0.4	0.1	0.0
					629	0.5	0.3	0.5	0.4	0.2	0.0
			RC ENV~1	Max	621	0.7	0.4	2.1	2.3	-1.5	0.0
					622	0.5	0.1	0.9	1.7	2.4	0.0
					630	0.2	0.7	1.3	-1.2	3.2	0.0
					629	0.6	0.6	4.8	-1.3	-1.5	0.0
				Min	621	-0.2	-0.7	-0.1	1.1	-4.0	0.0
					622	-0.7	-0.6	-1.9	1.2	1.2	0.0
					630	-0.6	-0.3	-1.3	-2.6	1.1	0.0
					629	-0.4	-0.1	1.0	-2.3	-3.3	0.0
			RC ENV~2	Max	621	0.5	-0.1	1.5	1.7	-2.0	0.0
					622	-0.0	-0.2	0.5	1.5	1.8	0.0
					630	-0.0	0.3	1.1	-1.6	2.3	0.0
					629	0.3	0.4	3.3	-1.4	-2.0	0.0
				Min	621	0.0	-0.3	0.2	1.4	-2.9	0.0
					622	-0.3	-0.5	-1.4	1.1	1.7	0.0
					630	-0.4	0.1	-0.7	-1.9	1.5	0.0
					629	-0.0	0.2	1.5	-1.8	-2.5	0.0
592	1	1	SX (RS)		622	0.2	0.2	1.0	0.0	0.5	0.0
					623	0.2	0.1	0.6	0.2	0.5	0.0

					631	0.2	0.2	0.1	0.2	0.3	0.0
					630	0.2	0.1	0.5	0.2	0.5	0.0
				SY (RS)	622	0.4	0.4	0.1	0.2	0.1	0.0
					623	0.5	0.6	1.5	0.2	0.2	0.0
					631	0.4	0.3	0.7	0.4	0.3	0.0
					630	0.5	0.5	0.7	0.5	0.2	0.0
			RC ENV~1	Max	622	0.6	0.2	2.7	1.9	-1.0	0.0
					623	0.3	0.3	-0.1	1.6	1.6	0.0
					631	0.2	0.6	1.8	-1.2	1.8	0.0
					630	0.6	0.7	6.1	-1.3	-1.2	0.0
				Min	622	-0.2	-0.6	0.8	1.1	-3.1	0.0
					623	-0.6	-0.8	-3.6	1.1	0.5	0.0
					631	-0.6	-0.1	-1.8	-2.4	0.6	0.0
					630	-0.4	-0.2	1.2	-2.4	-2.4	0.0
			RC ENV~2	Max	622	0.4	-0.2	1.9	1.4	-1.4	0.0
					623	-0.0	-0.2	-0.8	1.4	1.1	0.0
					631	-0.0	0.4	1.3	-1.6	1.3	0.0
					630	0.3	0.4	4.2	-1.4	-1.7	0.0
				Min	622	0.0	-0.4	0.9	1.1	-2.2	0.0
					623	-0.3	-0.5	-2.7	0.9	0.6	0.0
					631	-0.4	0.2	-0.9	-1.8	0.7	0.0
					630	0.0	0.2	1.8	-1.9	-1.8	0.0
593	1	1		SX (RS)	623	0.2	0.2	1.3	0.3	0.2	0.0
					624	0.1	0.1	1.1	0.2	0.6	0.0
					632	0.2	0.2	0.6	0.2	0.1	0.0
					631	0.2	0.1	0.8	0.1	0.5	0.0
				SY (RS)	623	0.3	0.2	0.5	0.3	0.4	0.0
					624	0.1	0.5	1.4	0.2	0.4	0.0
					632	0.2	0.3	1.0	0.4	0.4	0.0
					631	0.2	0.5	0.9	0.5	0.2	0.0
			RC ENV~1	Max	623	0.5	0.0	2.5	1.6	-0.5	0.0
					624	-0.0	0.3	0.0	1.4	1.0	0.0
					632	0.1	0.6	2.0	-1.1	0.8	0.0
					631	0.4	0.7	7.7	-1.2	-0.6	0.0
				Min	623	-0.1	-0.6	-0.2	0.9	-1.8	0.0
					624	-0.5	-0.8	-2.9	0.4	-1.2	0.0
					632	-0.5	-0.0	-2.8	-2.4	-0.3	0.0
					631	-0.0	-0.2	1.4	-2.2	-1.6	0.0
			RC ENV~2	Max	623	0.4	-0.2	1.2	1.2	-0.6	0.0
					624	-0.1	-0.2	-0.8	1.2	0.4	0.0
					632	-0.1	0.4	1.2	-1.5	0.5	0.0
					631	0.3	0.4	5.3	-1.1	-0.6	0.0
				Min	623	0.1	-0.4	0.5	1.0	-1.3	0.0
					624	-0.3	-0.4	-2.2	0.5	-0.7	0.0
					632	-0.4	0.2	-1.6	-1.8	-0.2	0.0
					631	0.1	0.2	2.3	-1.8	-1.1	0.0
594	1	1		SX (RS)	183	0.2	0.3	1.2	0.3	0.7	0.0
					625	0.2	0.0	1.2	0.4	1.0	0.0
					633	0.2	0.3	1.2	0.2	0.9	0.0
					186	0.2	0.1	1.3	0.4	0.7	0.0
				SY (RS)	183	0.3	0.3	0.6	0.4	0.0	0.0
					625	0.3	0.4	0.4	0.4	0.1	0.0
					633	0.4	0.3	0.5	0.7	0.1	0.0
					186	0.3	0.5	0.5	0.7	0.1	0.0
			RC ENV~1	Max	183	0.5	0.2	-0.6	2.0	1.8	0.0

					625	0.4	0.1	6.1	1.7	0.7	0.0
					633	0.2	0.4	3.5	-0.5	1.2	0.0
					186	0.2	0.8	0.5	-0.1	2.1	0.0
				Min	183	-0.1	-0.4	-3.7	0.7	0.5	0.0
					625	-0.3	-0.7	2.4	0.6	-1.2	0.0
					633	-0.5	-0.2	1.0	-2.2	-0.8	0.0
					186	-0.3	-0.2	-2.1	-1.6	0.7	0.0
			RC ENV~2	Max	183	0.4	-0.1	-1.8	1.4	1.3	0.0
					625	0.1	-0.2	4.5	1.2	0.3	0.0
					633	-0.1	0.1	2.6	-1.2	0.8	0.0
					186	-0.0	0.5	-0.2	-0.8	1.6	0.0
				Min	183	0.1	-0.2	-2.7	1.1	0.7	0.0
					625	0.0	-0.5	3.4	1.0	-0.5	0.0
					633	-0.3	0.1	1.8	-1.6	-0.0	0.0
					186	-0.1	0.2	-1.0	-1.2	1.1	0.0
595	1	1	SX (RS)		625	0.3	0.3	0.9	0.2	1.0	0.0
					626	0.2	0.1	1.0	0.3	1.1	0.0
					634	0.2	0.3	0.9	0.1	1.0	0.0
					633	0.3	0.1	0.8	0.3	1.0	0.0
			SY (RS)		625	0.5	0.4	0.7	0.5	0.1	0.0
					626	0.4	0.5	0.3	0.4	0.1	0.0
					634	0.5	0.4	0.3	0.7	0.1	0.0
					633	0.4	0.5	0.5	0.6	0.1	0.0
			RC ENV~1	Max	625	0.7	0.4	-0.7	2.5	0.9	0.0
					626	0.5	0.2	5.9	1.9	1.9	0.0
					634	0.3	0.5	2.4	-0.8	2.7	0.0
					633	0.3	0.8	0.7	-0.4	1.3	0.0
				Min	625	-0.3	-0.5	-3.7	1.0	-1.2	0.0
					626	-0.4	-0.8	2.4	0.8	-0.4	0.0
					634	-0.7	-0.4	0.5	-2.6	0.1	0.0
					633	-0.5	-0.2	-1.0	-1.9	-0.8	0.0
			RC ENV~2	Max	625	0.5	0.0	-1.5	1.8	0.0	0.0
					626	0.2	-0.3	4.3	1.4	1.3	0.0
					634	-0.0	0.1	1.8	-1.4	1.9	0.0
					633	0.0	0.5	0.4	-1.0	0.5	0.0
				Min	625	0.1	-0.1	-2.6	1.4	-0.8	0.0
					626	-0.0	-0.5	3.4	1.2	0.5	0.0
					634	-0.4	-0.0	1.0	-1.9	1.0	0.0
					633	-0.2	0.3	-0.3	-1.4	-0.3	0.0
596	1	1	SX (RS)		626	0.3	0.3	0.8	0.1	1.0	0.0
					627	0.3	0.2	0.9	0.2	0.9	0.0
					635	0.3	0.3	0.6	0.1	0.8	0.0
					634	0.3	0.2	0.4	0.2	1.1	0.0
			SY (RS)		626	0.5	0.4	0.6	0.5	0.1	0.0
					627	0.4	0.4	0.3	0.4	0.2	0.0
					635	0.5	0.5	0.3	0.6	0.2	0.0
					634	0.4	0.5	0.5	0.6	0.1	0.0
			RC ENV~1	Max	626	0.7	0.4	-0.1	2.8	-0.1	0.0
					627	0.5	0.2	5.6	2.0	2.9	0.0
					635	0.3	0.5	1.5	-0.9	3.8	0.0
					634	0.3	0.7	1.4	-0.6	0.4	0.0
				Min	626	-0.3	-0.5	-3.2	1.1	-2.8	0.0
					627	-0.4	-0.7	2.1	0.9	0.5	0.0
					635	-0.7	-0.4	0.2	-2.7	0.9	0.0
					634	-0.5	-0.2	-0.3	-2.0	-1.9	0.0
			RC ENV~2	Max	626	0.5	0.0	-0.9	2.0	-1.0	0.0

					627	0.2	-0.3	4.1	1.5	2.1	0.0
					635	-0.0	0.1	1.0	-1.5	2.7	0.0
					634	0.0	0.5	1.0	-1.2	-0.5	0.0
				Min	626	0.0	-0.1	-2.2	1.6	-1.9	0.0
					627	-0.0	-0.4	2.9	1.3	1.3	0.0
					635	-0.4	-0.0	0.3	-2.0	1.7	0.0
					634	-0.2	0.3	0.2	-1.5	-1.4	0.0
597	1	1	SX (RS)		627	0.3	0.3	0.8	0.1	0.8	0.0
					628	0.3	0.2	0.9	0.2	0.7	0.0
					636	0.3	0.3	0.5	0.0	0.6	0.0
					635	0.3	0.2	0.1	0.2	0.9	0.0
			SY (RS)		627	0.5	0.4	0.5	0.5	0.2	0.0
					628	0.4	0.3	0.3	0.4	0.2	0.0
					636	0.5	0.4	0.3	0.6	0.2	0.0
					635	0.4	0.4	0.5	0.5	0.2	0.0
			RC ENV~1	Max	627	0.7	0.4	0.7	2.8	-0.9	0.0
					628	0.4	0.1	4.7	2.1	3.4	0.0
					636	0.3	0.5	0.9	-1.0	4.2	0.0
					635	0.3	0.6	2.2	-0.8	-0.5	0.0
				Min	627	-0.3	-0.5	-2.1	1.2	-3.8	0.0
					628	-0.4	-0.6	1.4	1.1	1.1	0.0
					636	-0.7	-0.4	-0.8	-2.7	1.4	0.0
					635	-0.4	-0.1	0.0	-2.0	-2.9	0.0
			RC ENV~2	Max	627	0.5	0.0	-0.0	2.1	-1.7	0.0
					628	0.2	-0.2	3.4	1.6	2.5	0.0
					636	0.0	0.1	0.5	-1.6	3.0	0.0
					635	0.1	0.4	1.5	-1.3	-1.3	0.0
				Min	627	0.0	-0.1	-1.3	1.7	-2.7	0.0
					628	-0.1	-0.4	2.2	1.4	1.8	0.0
					636	-0.4	0.0	-0.4	-2.0	2.0	0.0
					635	-0.2	0.2	0.5	-1.5	-2.1	0.0
598	1	1	SX (RS)		628	0.3	0.3	0.8	0.1	0.6	0.0
					629	0.3	0.1	0.9	0.2	0.5	0.0
					637	0.2	0.3	0.3	0.1	0.4	0.0
					636	0.3	0.1	0.1	0.2	0.7	0.0
			SY (RS)		628	0.5	0.5	0.4	0.5	0.2	0.0
					629	0.4	0.3	0.3	0.5	0.2	0.0
					637	0.5	0.5	0.3	0.6	0.1	0.0
					636	0.4	0.3	0.5	0.6	0.2	0.0
			RC ENV~1	Max	628	0.6	0.4	1.6	2.8	-1.4	0.0
					629	0.4	0.1	3.4	2.3	3.2	0.0
					637	0.3	0.6	0.5	-1.0	3.9	0.0
					636	0.4	0.5	2.9	-0.9	-1.1	0.0
				Min	628	-0.3	-0.6	-0.8	1.3	-4.2	0.0
					629	-0.4	-0.5	0.6	1.2	1.4	0.0
					637	-0.6	-0.4	-1.5	-2.7	1.5	0.0
					636	-0.3	-0.1	0.3	-2.2	-3.4	0.0
			RC ENV~2	Max	628	0.4	-0.1	1.0	2.1	-2.0	0.0
					629	0.1	-0.2	2.4	1.7	2.4	0.0
					637	0.0	0.2	0.2	-1.6	2.8	0.0
					636	0.1	0.4	2.0	-1.3	-1.7	0.0
				Min	628	0.0	-0.1	-0.3	1.7	-3.0	0.0
					629	-0.2	-0.4	1.2	1.5	1.8	0.0
					637	-0.4	0.1	-0.9	-2.0	1.9	0.0
					636	-0.1	0.2	0.7	-1.6	-2.5	0.0
599	1	1	SX (RS)		629	0.2	0.3	0.7	0.1	0.4	0.0

					630	0.3	0.1	0.6	0.2	0.4	0.0
					638	0.2	0.3	0.2	0.1	0.3	0.0
					637	0.3	0.1	0.3	0.2	0.5	0.0
				SY (RS)	629	0.5	0.5	0.3	0.4	0.1	0.0
					630	0.4	0.3	0.6	0.5	0.2	0.0
					638	0.5	0.5	0.4	0.6	0.1	0.0
					637	0.4	0.3	0.4	0.6	0.2	0.0
			RC ENV~1	Max	629	0.6	0.4	2.3	2.7	-1.5	0.0
					630	0.4	0.1	2.0	2.4	2.4	0.0
					638	0.4	0.7	0.5	-0.9	3.1	0.0
					637	0.5	0.5	3.8	-0.9	-1.4	0.0
				Min	629	-0.3	-0.7	0.5	1.3	-3.9	0.0
					630	-0.5	-0.5	-0.1	1.3	1.2	0.0
					638	-0.6	-0.4	-2.2	-2.6	1.2	0.0
					637	-0.3	-0.1	0.5	-2.3	-3.2	0.0
			RC ENV~2	Max	629	0.3	-0.1	1.8	2.0	-1.9	0.0
					630	0.1	-0.2	1.4	1.8	1.8	0.0
					638	0.0	0.3	0.2	-1.6	2.2	0.0
					637	0.2	0.4	2.5	-1.4	-1.8	0.0
				Min	629	0.0	-0.2	0.6	1.7	-2.8	0.0
					630	-0.2	-0.4	0.1	1.5	1.6	0.0
					638	-0.3	0.1	-1.4	-1.9	1.5	0.0
					637	-0.1	0.2	0.9	-1.8	-2.3	0.0
600	1	1		SX (RS)	630	0.2	0.3	0.8	0.1	0.3	0.0
					631	0.2	0.1	0.5	0.2	0.4	0.0
					639	0.2	0.3	0.1	0.2	0.2	0.0
					638	0.2	0.1	0.4	0.2	0.4	0.0
				SY (RS)	630	0.4	0.5	0.2	0.4	0.2	0.0
					631	0.4	0.3	1.0	0.5	0.2	0.0
					639	0.4	0.5	0.8	0.7	0.2	0.0
					638	0.4	0.3	0.4	0.8	0.2	0.0
			RC ENV~1	Max	630	0.5	0.3	2.9	2.5	-1.2	0.0
					631	0.3	0.0	0.8	2.3	1.5	0.0
					639	0.3	0.7	1.0	-0.9	1.9	0.0
					638	0.5	0.5	4.7	-0.9	-1.2	0.0
				Min	630	-0.3	-0.7	1.3	1.3	-3.1	0.0
					631	-0.5	-0.5	-1.1	1.3	0.8	0.0
					639	-0.5	-0.3	-2.7	-2.6	0.8	0.0
					638	-0.3	-0.1	0.6	-2.4	-2.4	0.0
			RC ENV~2	Max	630	0.3	-0.1	2.2	1.9	-1.4	0.0
					631	0.0	-0.2	0.5	1.8	1.2	0.0
					639	-0.0	0.4	0.3	-1.5	1.4	0.0
					638	0.2	0.4	3.1	-1.3	-1.5	0.0
				Min	630	0.0	-0.4	1.3	1.7	-2.2	0.0
					631	-0.3	-0.4	-0.6	1.3	0.8	0.0
					639	-0.3	0.2	-1.7	-1.9	0.9	0.0
					638	-0.0	0.2	0.9	-1.8	-1.8	0.0
601	1	1		SX (RS)	631	0.2	0.3	1.2	0.2	0.1	0.0
					632	0.2	0.2	1.0	0.1	0.1	0.0
					640	0.2	0.2	0.3	0.2	0.1	0.0
					639	0.2	0.2	0.4	0.1	0.3	0.0
				SY (RS)	631	0.2	0.3	0.5	0.4	0.2	0.0
					632	0.2	0.1	1.0	0.4	0.2	0.0
					640	0.2	0.3	0.9	0.8	0.2	0.0
					639	0.2	0.1	0.6	0.8	0.2	0.0

			RC ENV~1	Max	631	0.4	0.1	3.3	2.3	-0.8	0.0
					632	0.1	-0.0	0.6	2.1	0.9	0.0
					640	0.1	0.6	1.3	-0.6	0.7	0.0
					639	0.4	0.6	5.6	-0.9	-0.8	0.0
				Min	631	-0.1	-0.6	1.0	1.2	-2.0	0.0
					632	-0.4	-0.6	-1.4	1.1	-0.6	0.0
					640	-0.4	-0.1	-3.3	-2.4	-0.0	0.0
					639	-0.1	0.0	0.4	-2.5	-1.5	0.0
			RC ENV~2	Max	631	0.3	-0.2	2.2	1.7	-0.9	0.0
					632	-0.0	-0.2	-0.2	1.7	0.7	0.0
					640	-0.0	0.4	0.5	-1.4	0.5	0.0
					639	0.3	0.4	3.7	-1.1	-0.8	0.0
				Min	631	0.1	-0.4	1.7	1.5	-1.4	0.0
					632	-0.3	-0.4	-0.8	1.0	-0.3	0.0
					640	-0.3	0.2	-2.0	-1.8	0.1	0.0
					639	0.0	0.2	1.0	-1.7	-1.2	0.0
602	1	1	SX (RS)		186	0.1	0.4	1.3	0.2	0.6	0.0
					633	0.4	0.2	1.0	0.4	1.1	0.0
					641	0.1	0.3	1.3	0.2	0.8	0.0
					189	0.5	0.1	1.6	0.4	1.0	0.0
			SY (RS)		186	0.4	0.2	0.5	0.6	0.1	0.0
					633	0.2	0.6	0.6	0.6	0.1	0.0
					641	0.5	0.1	0.5	0.9	0.2	0.0
					189	0.2	0.7	0.5	0.9	0.2	0.0
			RC ENV~1	Max	186	0.6	0.2	-0.0	2.0	1.7	0.0
					633	0.5	0.3	6.9	1.7	0.8	0.0
					641	0.3	0.5	2.6	0.1	1.2	0.0
					189	0.4	1.1	0.4	0.5	2.4	0.0
				Min	186	-0.3	-0.6	-3.0	0.4	0.5	0.0
					633	-0.3	-1.0	3.3	0.2	-1.3	0.0
					641	-0.6	-0.2	0.0	-1.6	-0.7	0.0
					189	-0.5	-0.3	-2.8	-1.2	0.4	0.0
			RC ENV~2	Max	186	0.2	-0.0	-1.2	1.4	1.2	0.0
					633	0.3	-0.3	5.2	1.2	0.3	0.0
					641	-0.1	0.3	1.8	-0.7	0.8	0.0
					189	0.1	0.6	-0.8	-0.3	1.7	0.0
				Min	186	0.1	-0.3	-2.1	1.0	0.6	0.0
					633	-0.1	-0.6	4.3	0.8	-0.5	0.0
					641	-0.2	0.0	0.9	-1.2	-0.0	0.0
					189	-0.3	0.3	-1.8	-0.7	1.0	0.0
603	1	1	SX (RS)		633	0.2	0.3	0.9	0.2	0.9	0.0
					634	0.4	0.2	1.0	0.2	1.1	0.0
					642	0.1	0.3	1.1	0.1	1.0	0.0
					641	0.4	0.2	1.0	0.2	1.1	0.0
			SY (RS)		633	0.5	0.2	0.5	0.6	0.2	0.0
					634	0.4	0.6	0.5	0.6	0.1	0.0
					642	0.6	0.3	0.3	0.8	0.1	0.0
					641	0.4	0.7	0.5	0.8	0.2	0.0
			RC ENV~1	Max	633	0.7	0.2	0.1	2.4	0.8	0.0
					634	0.5	0.3	6.6	1.9	2.0	0.0
					642	0.4	0.3	1.8	-0.2	2.7	0.0
					641	0.3	1.0	0.2	0.2	1.4	0.0
				Min	633	-0.4	-0.4	-2.4	0.7	-1.3	0.0
					634	-0.3	-0.9	3.0	0.5	-0.4	0.0
					642	-0.7	-0.3	-0.3	-1.9	-0.0	0.0
					641	-0.6	-0.3	-1.8	-1.4	-0.8	0.0

			RC ENV~2	Max	633	0.3	-0.0	-0.7	1.8	-0.0	0.0
					634	0.3	-0.3	4.9	1.4	1.4	0.0
					642	-0.1	0.1	1.1	-0.9	1.9	0.0
					641	0.0	0.6	-0.4	-0.5	0.5	0.0
				Min	633	0.1	-0.1	-1.7	1.3	-0.8	0.0
					634	-0.0	-0.5	3.9	1.1	0.5	0.0
					642	-0.3	0.0	0.3	-1.4	0.9	0.0
					641	-0.3	0.3	-1.2	-0.9	-0.3	0.0
604	1	1	SX (RS)		634	0.2	0.3	0.6	0.1	1.0	0.0
					635	0.5	0.3	0.9	0.2	0.9	0.0
					643	0.1	0.3	0.6	0.1	0.9	0.0
					642	0.5	0.3	0.4	0.2	1.1	0.0
			SY (RS)		634	0.5	0.4	0.5	0.6	0.2	0.0
					635	0.4	0.4	0.4	0.6	0.2	0.0
					643	0.5	0.4	0.4	0.7	0.2	0.0
					642	0.4	0.5	0.5	0.7	0.2	0.0
			RC ENV~1	Max	634	0.7	0.4	0.5	2.6	-0.0	0.0
					635	0.6	0.2	6.1	2.0	2.9	0.0
					643	0.4	0.4	0.7	-0.4	3.7	0.0
					642	0.4	0.8	0.5	-0.0	0.4	0.0
				Min	634	-0.4	-0.4	-1.8	0.9	-2.7	0.0
					635	-0.3	-0.7	2.6	0.7	0.4	0.0
					643	-0.7	-0.4	-0.6	-2.0	0.7	0.0
					642	-0.7	-0.2	-0.8	-1.4	-2.0	0.0
			RC ENV~2	Max	634	0.3	0.0	-0.1	1.9	-0.9	0.0
					635	0.3	-0.2	4.5	1.5	2.1	0.0
					643	0.0	0.0	0.3	-1.1	2.6	0.0
					642	0.0	0.5	0.2	-0.7	-0.5	0.0
				Min	634	0.0	-0.0	-1.2	1.5	-1.9	0.0
					635	-0.0	-0.4	3.4	1.2	1.2	0.0
					643	-0.3	-0.0	-0.4	-1.5	1.5	0.0
					642	-0.4	0.2	-0.5	-1.0	-1.4	0.0
605	1	1	SX (RS)		635	0.2	0.3	0.6	0.1	0.8	0.0
					636	0.4	0.2	0.8	0.2	0.7	0.0
					644	0.2	0.3	0.4	0.1	0.6	0.0
					643	0.4	0.2	0.2	0.2	0.9	0.0
			SY (RS)		635	0.5	0.4	0.5	0.6	0.2	0.0
					636	0.3	0.3	0.4	0.6	0.2	0.0
					644	0.5	0.4	0.5	0.7	0.2	0.0
					643	0.3	0.3	0.5	0.6	0.2	0.0
			RC ENV~1	Max	635	0.6	0.4	1.2	2.7	-0.8	0.0
					636	0.5	0.1	5.3	2.1	3.3	0.0
					644	0.4	0.4	0.2	-0.4	4.1	0.0
					643	0.3	0.5	1.3	-0.2	-0.4	0.0
				Min	635	-0.4	-0.4	-0.9	1.0	-3.7	0.0
					636	-0.3	-0.5	2.1	0.8	1.0	0.0
					644	-0.6	-0.4	-1.6	-2.1	1.2	0.0
					643	-0.5	-0.2	-0.6	-1.5	-2.9	0.0
			RC ENV~2	Max	635	0.3	0.0	0.7	2.0	-1.6	0.0
					636	0.3	-0.2	3.9	1.6	2.4	0.0
					644	0.0	0.0	-0.2	-1.1	2.9	0.0
					643	0.1	0.3	0.8	-0.8	-1.2	0.0
				Min	635	-0.0	-0.0	-0.5	1.6	-2.6	0.0
					636	-0.1	-0.3	2.8	1.3	1.6	0.0
					644	-0.3	-0.0	-1.1	-1.5	1.8	0.0
					643	-0.3	0.2	-0.1	-1.1	-2.1	0.0

606	1	1	SX (RS)		636	0.2	0.3	0.6	0.1	0.6	0.0
					637	0.4	0.2	0.6	0.2	0.4	0.0
					645	0.2	0.3	0.4	0.1	0.4	0.0
					644	0.4	0.2	0.3	0.2	0.6	0.0
			SY (RS)		636	0.5	0.4	0.5	0.6	0.2	0.0
					637	0.3	0.3	0.4	0.6	0.2	0.0
					645	0.6	0.4	0.4	0.8	0.1	0.0
					644	0.2	0.3	0.6	0.6	0.2	0.0
			RC ENV~1	Max	636	0.6	0.4	2.0	2.7	-1.3	0.0
					637	0.4	0.1	4.3	2.2	3.1	0.0
					645	0.5	0.5	-0.2	-0.4	3.8	0.0
					644	0.3	0.5	2.1	-0.3	-1.0	0.0
				Min	636	-0.4	-0.5	0.1	1.0	-4.1	0.0
					637	-0.3	-0.5	1.6	0.9	1.2	0.0
					645	-0.6	-0.4	-2.5	-2.1	1.4	0.0
					644	-0.4	-0.1	-0.3	-1.5	-3.2	0.0
			RC ENV~2	Max	636	0.2	-0.0	1.5	2.0	-1.8	0.0
					637	0.2	-0.2	3.1	1.7	2.2	0.0
					645	0.0	0.1	-0.6	-1.1	2.7	0.0
					644	0.1	0.3	1.4	-0.8	-1.6	0.0
				Min	636	-0.0	-0.1	0.3	1.6	-2.9	0.0
					637	-0.1	-0.3	2.1	1.4	1.6	0.0
					645	-0.2	0.0	-1.7	-1.5	1.7	0.0
					644	-0.2	0.2	0.2	-1.1	-2.3	0.0
607	1	1	SX (RS)		637	0.2	0.3	0.6	0.1	0.4	0.0
					638	0.3	0.2	0.4	0.2	0.3	0.0
					646	0.2	0.3	0.4	0.1	0.2	0.0
					645	0.3	0.2	0.3	0.1	0.4	0.0
			SY (RS)		637	0.6	0.5	0.5	0.7	0.1	0.0
					638	0.3	0.3	0.3	0.7	0.2	0.0
					646	0.6	0.6	0.3	0.9	0.1	0.0
					645	0.3	0.3	0.4	0.7	0.3	0.0
			RC ENV~1	Max	637	0.6	0.4	2.8	2.7	-1.4	0.0
					638	0.3	0.1	3.2	2.3	2.2	0.0
					646	0.6	0.7	-0.6	-0.2	3.0	0.0
					645	0.4	0.5	3.0	-0.2	-1.2	0.0
				Min	637	-0.5	-0.6	1.3	1.0	-3.8	0.0
					638	-0.4	-0.4	1.2	0.9	1.1	0.0
					646	-0.7	-0.4	-3.5	-2.1	1.2	0.0
					645	-0.3	-0.2	-0.0	-1.7	-3.0	0.0
			RC ENV~2	Max	637	0.2	-0.1	2.2	2.0	-1.7	0.0
					638	0.1	-0.2	2.3	1.8	1.7	0.0
					646	0.0	0.3	-1.0	-1.1	2.1	0.0
					645	0.1	0.3	2.0	-0.8	-1.6	0.0
				Min	637	-0.0	-0.2	1.2	1.7	-2.7	0.0
					638	-0.2	-0.3	1.5	1.4	1.4	0.0
					646	-0.1	0.1	-2.4	-1.5	1.4	0.0
					645	-0.1	0.1	0.4	-1.2	-2.2	0.0
608	1	1	SX (RS)		638	0.3	0.3	0.7	0.1	0.2	0.0
					639	0.3	0.2	0.5	0.2	0.2	0.0
					647	0.2	0.3	0.2	0.1	0.1	0.0
					646	0.3	0.2	0.3	0.1	0.3	0.0
			SY (RS)		638	0.5	0.6	0.5	0.7	0.2	0.0
					639	0.4	0.1	0.5	0.8	0.2	0.0
					647	0.5	0.7	0.8	1.0	0.2	0.0
					646	0.4	0.1	0.2	1.0	0.3	0.0

			RC ENV~1	Max	638	0.6	0.4	3.5	2.7	-1.2	0.0
					639	0.3	0.0	2.0	2.5	1.2	0.0
					647	0.5	0.9	-0.2	-0.0	1.7	0.0
					646	0.5	0.4	3.7	-0.1	-1.0	0.0
				Min	638	-0.4	-0.8	2.0	0.9	-3.0	0.0
					639	-0.5	-0.5	0.6	0.9	0.8	0.0
					647	-0.6	-0.5	-4.1	-2.1	0.6	0.0
					646	-0.3	-0.0	0.0	-2.1	-2.2	0.0
			RC ENV~2	Max	638	0.2	-0.1	2.8	2.0	-1.3	0.0
					639	0.1	-0.2	1.5	1.8	1.0	0.0
					647	0.0	0.4	-1.0	-1.1	1.2	0.0
					646	0.2	0.3	2.4	-0.8	-1.3	0.0
				Min	638	-0.0	-0.4	2.1	1.6	-2.1	0.0
					639	-0.2	-0.3	0.9	1.3	0.7	0.0
					647	-0.1	0.2	-2.7	-1.5	0.8	0.0
					646	-0.1	0.2	0.3	-1.2	-1.6	0.0
609	1	1	SX (RS)		639	0.3	0.3	0.8	0.1	0.1	0.0
					640	0.3	0.3	0.7	0.1	0.1	0.0
					648	0.3	0.3	0.4	0.1	0.2	0.0
					647	0.3	0.2	0.4	0.2	0.2	0.0
			SY (RS)		639	0.3	0.6	0.7	0.7	0.2	0.0
					640	0.2	0.3	0.8	0.8	0.2	0.0
					648	0.3	0.6	0.9	1.1	0.2	0.0
					647	0.3	0.3	0.5	1.2	0.2	0.0
			RC ENV~1	Max	639	0.4	0.3	4.2	2.5	-0.6	0.0
					640	0.2	0.1	1.3	2.5	0.9	0.0
					648	0.2	0.9	0.7	0.2	0.5	0.0
					647	0.4	0.5	3.7	-0.0	-0.7	0.0
				Min	639	-0.2	-0.8	2.4	0.8	-1.8	0.0
					640	-0.4	-0.6	-0.3	0.9	-0.5	0.0
					648	-0.4	-0.4	-3.9	-2.0	-0.3	0.0
					647	-0.2	-0.0	-0.8	-2.3	-1.2	0.0
			RC ENV~2	Max	639	0.2	-0.2	3.3	1.8	-0.8	0.0
					640	0.0	-0.2	0.6	1.8	0.7	0.0
					648	-0.0	0.5	-0.2	-0.8	0.3	0.0
					647	0.2	0.4	2.3	-0.8	-0.7	0.0
				Min	639	0.0	-0.5	2.9	1.5	-1.3	0.0
					640	-0.2	-0.4	0.3	1.1	-0.2	0.0
					648	-0.2	0.2	-2.5	-1.3	-0.2	0.0
					647	-0.0	0.2	-0.3	-1.3	-0.9	0.0
610	1	1	SX (RS)		189	0.2	0.5	0.8	0.3	0.4	0.0
					641	0.6	0.3	0.6	0.2	1.4	0.0
					649	0.3	0.4	4.4	0.2	1.1	0.0
					192	0.5	0.2	4.2	0.2	0.2	0.0
			SY (RS)		189	0.6	0.4	0.4	0.8	0.3	0.0
					641	0.2	1.0	1.2	0.9	0.1	0.0
					649	0.7	0.2	0.1	1.1	0.1	0.0
					192	0.2	1.2	1.5	1.3	0.5	0.0
			RC ENV~1	Max	189	0.8	0.3	0.2	1.5	1.6	0.0
					641	0.7	0.6	7.8	1.3	1.0	0.0
					649	0.5	0.6	4.8	1.2	1.1	0.0
					192	0.4	1.7	2.5	1.7	2.1	0.0
				Min	189	-0.5	-0.7	-2.3	-0.1	0.8	0.0
					641	-0.5	-1.5	3.8	-0.4	-1.8	0.0
					649	-0.9	-0.2	-4.0	-1.1	-1.3	0.0
					192	-0.6	-0.7	-5.9	-0.9	1.1	0.0

			RC ENV~2	Max	189	0.3	0.0	-0.3	1.1	1.2	0.0
					641	0.4	-0.4	5.8	0.8	0.4	0.0
					649	-0.1	0.4	2.0	0.1	0.7	0.0
					192	0.1	0.8	-0.6	0.4	1.6	0.0
				Min	189	0.1	-0.5	-1.6	0.6	0.8	0.0
					641	-0.1	-0.8	5.0	0.4	-0.7	0.0
					649	-0.3	-0.0	-1.0	-0.2	-0.4	0.0
					192	-0.3	0.5	-3.2	0.1	1.5	0.0
611	1	1	SX (RS)		641	0.1	0.4	0.5	0.2	1.1	0.0
					642	0.9	0.4	1.2	0.2	1.2	0.0
					650	0.1	0.5	0.9	0.2	1.1	0.0
					649	1.1	0.5	0.6	0.5	1.5	0.0
			SY (RS)		641	0.6	0.2	0.6	0.8	0.2	0.0
					642	0.5	0.7	0.7	0.8	0.1	0.0
					650	0.6	0.3	0.3	0.7	0.2	0.0
					649	0.5	0.9	0.4	1.0	0.3	0.0
			RC ENV~1	Max	641	0.7	0.4	0.7	1.8	1.1	0.0
					642	1.1	0.4	7.5	1.4	2.0	0.0
					650	0.5	0.5	1.0	0.7	2.6	0.0
					649	0.8	1.3	-1.0	1.3	1.8	0.0
				Min	641	-0.5	-0.5	-1.4	0.1	-1.2	0.0
					642	-0.6	-1.0	3.4	-0.2	-0.6	0.0
					650	-0.7	-0.5	-0.9	-0.8	-0.3	0.0
					649	-1.4	-0.5	-3.4	-0.7	-1.1	0.0
			RC ENV~2	Max	641	0.2	0.1	0.2	1.3	0.2	0.0
					642	0.7	-0.2	5.6	1.0	1.4	0.0
					650	0.0	0.1	0.5	-0.1	1.8	0.0
					649	0.1	0.7	-1.0	0.3	0.7	0.0
				Min	641	0.1	-0.2	-0.8	0.9	-0.8	0.0
					642	-0.1	-0.6	4.5	0.6	0.5	0.0
					650	-0.2	-0.2	-0.2	-0.4	0.8	0.0
					649	-0.8	0.2	-2.5	-0.1	-0.4	0.0
612	1	1	SX (RS)		642	0.1	0.4	0.5	0.1	1.1	0.0
					643	0.7	0.2	0.9	0.2	0.9	0.0
					651	0.2	0.4	0.5	0.1	0.9	0.0
					650	0.8	0.2	0.5	0.2	1.2	0.0
			SY (RS)		642	0.5	0.3	0.7	0.7	0.2	0.0
					643	0.3	0.4	0.6	0.7	0.2	0.0
					651	0.5	0.4	0.6	0.6	0.2	0.0
					650	0.3	0.4	0.7	0.7	0.2	0.0
			RC ENV~1	Max	642	0.6	0.4	1.3	1.9	0.2	0.0
					643	0.8	0.2	6.8	1.4	2.8	0.0
					651	0.5	0.4	0.1	0.4	3.5	0.0
					650	0.6	0.6	-0.3	0.8	0.6	0.0
				Min	642	-0.4	-0.4	-0.6	0.3	-2.7	0.0
					643	-0.5	-0.6	3.2	0.1	0.2	0.0
					651	-0.6	-0.4	-1.5	-0.9	0.5	0.0
					650	-0.9	-0.2	-1.9	-0.6	-1.9	0.0
			RC ENV~2	Max	642	0.2	0.1	0.7	1.4	-0.8	0.0
					643	0.5	-0.1	5.0	1.1	2.0	0.0
					651	0.1	0.1	-0.3	-0.2	2.5	0.0
					650	0.1	0.3	-0.3	0.1	-0.4	0.0
				Min	642	-0.1	-0.1	-0.3	1.0	-1.9	0.0
					643	-0.1	-0.3	4.0	0.7	1.1	0.0
					651	-0.2	-0.1	-1.0	-0.6	1.4	0.0
					650	-0.6	0.2	-1.4	-0.1	-1.3	0.0

613	1	1	SX (RS)	643	0.1	0.3	0.5	0.1	0.8	0.0
				644	0.5	0.2	0.7	0.2	0.6	0.0
				652	0.1	0.3	0.4	0.1	0.6	0.0
				651	0.6	0.2	0.4	0.2	0.9	0.0
			SY (RS)	643	0.5	0.3	0.6	0.7	0.2	0.0
				644	0.2	0.3	0.6	0.6	0.3	0.0
				652	0.6	0.4	0.7	0.7	0.2	0.0
				651	0.1	0.3	0.7	0.6	0.3	0.0
			RC ENV~1 Max	643	0.6	0.3	1.9	2.1	-0.6	0.0
				644	0.6	0.2	6.0	1.5	3.1	0.0
				652	0.5	0.4	-0.3	0.4	3.9	0.0
				651	0.4	0.5	0.6	0.6	-0.2	0.0
			Min	643	-0.5	-0.3	0.1	0.5	-3.6	0.0
				644	-0.4	-0.5	2.8	0.3	0.8	0.0
				652	-0.6	-0.4	-2.4	-1.0	1.0	0.0
				651	-0.7	-0.2	-1.3	-0.6	-2.7	0.0
			RC ENV~2 Max	643	0.2	0.1	1.3	1.5	-1.4	0.0
				644	0.4	-0.1	4.4	1.1	2.2	0.0
				652	0.1	0.0	-0.9	-0.3	2.7	0.0
				651	0.1	0.3	0.3	0.0	-1.1	0.0
			Min	643	-0.1	-0.0	0.3	1.1	-2.5	0.0
				644	-0.1	-0.3	3.4	0.8	1.4	0.0
				652	-0.2	-0.1	-1.7	-0.7	1.6	0.0
				651	-0.4	0.1	-0.7	-0.2	-1.9	0.0
614	1	1	SX (RS)	644	0.1	0.3	0.6	0.1	0.6	0.0
				645	0.4	0.2	0.5	0.1	0.4	0.0
				653	0.1	0.3	0.5	0.1	0.4	0.0
				652	0.4	0.2	0.4	0.1	0.6	0.0
			SY (RS)	644	0.6	0.4	0.6	0.7	0.2	0.0
				645	0.1	0.3	0.7	0.6	0.3	0.0
				653	0.6	0.4	0.9	0.8	0.2	0.0
				652	0.1	0.3	0.8	0.5	0.3	0.0
			RC ENV~1 Max	644	0.6	0.3	2.6	2.1	-1.1	0.0
				645	0.4	0.1	5.1	1.6	2.9	0.0
				653	0.6	0.4	-0.6	0.5	3.6	0.0
				652	0.4	0.4	1.4	0.5	-0.8	0.0
			Min	644	-0.5	-0.4	1.1	0.4	-3.9	0.0
				645	-0.4	-0.4	2.2	0.3	1.1	0.0
				653	-0.6	-0.3	-3.5	-1.0	1.2	0.0
				652	-0.5	-0.2	-1.0	-0.6	-3.1	0.0
			RC ENV~2 Max	644	0.1	0.0	2.1	1.6	-1.7	0.0
				645	0.2	-0.1	3.7	1.1	2.1	0.0
				653	0.1	0.1	-1.4	-0.2	2.6	0.0
				652	0.1	0.2	0.8	0.0	-1.4	0.0
			Min	644	-0.1	-0.1	1.0	1.1	-2.8	0.0
				645	-0.1	-0.2	2.9	0.9	1.4	0.0
				653	-0.1	0.0	-2.5	-0.7	1.5	0.0
				652	-0.3	0.1	-0.3	-0.2	-2.2	0.0
615	1	1	SX (RS)	645	0.3	0.3	0.7	0.1	0.3	0.0
				646	0.3	0.3	0.3	0.1	0.2	0.0
				654	0.3	0.3	0.7	0.1	0.1	0.0
				653	0.3	0.3	0.4	0.1	0.4	0.0
			SY (RS)	645	0.6	0.4	0.6	0.9	0.2	0.0
				646	0.2	0.3	0.9	0.8	0.4	0.0
				654	0.7	0.5	1.1	0.9	0.2	0.0
				653	0.2	0.3	0.8	0.6	0.4	0.0

			RC ENV~1	Max	645	0.7	0.4	3.5	2.1	-1.3	0.0
					646	0.3	0.2	4.2	1.8	2.0	0.0
					654	0.7	0.5	-0.9	0.8	2.8	0.0
					653	0.3	0.4	2.3	0.6	-1.0	0.0
				Min	645	-0.6	-0.5	2.1	0.2	-3.7	0.0
					646	-0.4	-0.4	1.6	0.2	0.7	0.0
					654	-0.7	-0.4	-5.0	-1.0	1.0	0.0
					653	-0.3	-0.2	-0.8	-0.6	-2.8	0.0
			RC ENV~2	Max	645	0.1	-0.0	2.9	1.5	-1.6	0.0
					646	0.1	-0.1	3.1	1.1	1.4	0.0
					654	0.0	0.2	-2.0	-0.1	2.0	0.0
					653	0.1	0.2	1.5	0.1	-1.4	0.0
				Min	645	-0.0	-0.2	1.9	1.1	-2.6	0.0
					646	-0.1	-0.2	2.5	0.8	1.1	0.0
					654	-0.0	0.1	-3.5	-0.5	1.2	0.0
					653	-0.2	0.1	-0.1	-0.2	-2.0	0.0
616	1	1	SX (RS)		646	0.4	0.4	0.9	0.1	0.1	0.0
					647	0.4	0.3	0.3	0.2	0.2	0.0
					655	0.5	0.5	1.1	0.2	0.4	0.0
					654	0.3	0.3	0.2	0.1	0.2	0.0
			SY (RS)		646	0.8	0.8	1.0	1.1	0.2	0.0
					647	0.4	0.0	0.7	1.1	0.3	0.0
					655	0.9	1.0	0.5	1.4	0.3	0.0
					654	0.3	0.2	0.2	0.9	0.5	0.0
			RC ENV~1	Max	646	0.8	0.6	4.9	2.3	-1.0	0.0
					647	0.3	0.1	3.6	2.2	0.8	0.0
					655	1.0	1.2	-1.8	1.4	1.4	0.0
					654	0.4	0.4	3.1	1.0	-0.5	0.0
				Min	646	-0.8	-1.0	2.6	0.1	-2.8	0.0
					647	-0.5	-0.4	1.7	0.1	0.3	0.0
					655	-0.8	-0.7	-7.0	-1.4	0.1	0.0
					654	-0.3	-0.2	-0.2	-0.8	-1.9	0.0
			RC ENV~2	Max	646	-0.0	-0.1	3.8	1.6	-1.2	0.0
					647	0.1	-0.1	2.7	1.3	0.6	0.0
					655	0.1	0.5	-2.8	0.0	1.0	0.0
					654	0.2	0.2	2.0	0.3	-1.0	0.0
				Min	646	-0.1	-0.4	3.0	1.2	-2.0	0.0
					647	-0.2	-0.3	2.4	0.8	0.3	0.0
					655	0.0	0.1	-4.9	-0.4	0.4	0.0
					654	-0.1	0.1	0.0	0.0	-1.4	0.0
617	1	1	SX (RS)		647	0.3	0.4	0.5	0.1	0.3	0.0
					648	0.4	0.3	0.6	0.2	0.2	0.0
					656	0.2	0.3	1.8	0.1	0.5	0.0
					655	0.5	0.3	2.4	0.1	0.3	0.0
			SY (RS)		647	0.4	1.1	1.8	1.1	0.3	0.0
					648	0.5	0.7	0.8	1.1	0.4	0.0
					656	0.4	1.3	3.2	1.9	0.5	0.0
					655	0.5	0.5	0.6	1.7	0.5	0.0
			RC ENV~1	Max	647	0.5	0.8	6.1	2.2	-0.1	0.0
					648	0.3	0.4	2.7	2.5	0.7	0.0
					656	0.4	1.6	1.6	2.0	0.2	0.0
					655	0.6	0.7	2.2	1.7	0.2	0.0
				Min	647	-0.4	-1.4	2.6	-0.0	-1.3	0.0
					648	-0.6	-1.0	1.0	0.2	-1.0	0.0
					656	-0.5	-1.0	-5.8	-1.8	-1.1	0.0
					655	-0.4	-0.3	-3.9	-1.7	-0.8	0.0

			RC ENV~2	Max	647	0.1	-0.2	4.5	1.5	-0.4	0.0
					648	0.0	-0.2	2.1	1.4	0.3	0.0
					656	0.0	0.6	-1.5	0.1	-0.2	0.0
					655	0.3	0.4	1.2	0.3	0.0	0.0
				Min	647	-0.0	-0.6	4.1	1.1	-0.9	0.0
					648	-0.3	-0.5	1.6	0.9	-0.6	0.0
					656	-0.1	0.2	-4.0	-0.3	-0.8	0.0
					655	-0.1	0.2	-1.6	-0.1	-0.4	0.0
618	1	1	SX (RS)		192	0.1	1.1	2.7	0.5	1.0	0.0
					649	2.1	0.7	4.2	0.5	1.8	0.0
					51	1.2	1.1	1.5	0.2	1.5	0.0
					14	3.2	0.8	3.1	0.9	5.6	0.0
			SY (RS)		192	1.0	0.9	1.4	1.2	0.1	0.0
					649	0.8	1.6	3.0	1.4	0.4	0.0
					51	1.0	0.2	1.8	0.8	0.4	0.0
					14	0.8	2.6	2.6	4.1	0.8	0.0
			RC ENV~1	Max	192	1.3	0.7	3.3	1.2	2.9	0.0
					649	2.6	1.0	10.8	1.1	1.4	0.0
					51	1.1	1.1	3.2	2.3	1.3	0.0
					14	2.5	3.6	-1.4	5.7	7.6	0.0
				Min	192	-0.8	-1.4	-2.0	-1.2	0.6	0.0
					649	-1.6	-2.3	1.8	-1.6	-2.2	0.0
					51	-1.3	-1.1	-0.8	0.7	-1.7	0.0
					14	-3.8	-1.6	-10.0	-2.6	-3.5	-0.0
			RC ENV~2	Max	192	0.4	0.2	1.4	0.3	2.2	0.0
					649	1.5	-0.4	8.0	0.1	0.5	0.0
					51	0.5	0.5	2.3	1.8	0.7	0.0
					14	0.6	1.7	-2.5	1.8	3.9	0.0
				Min	192	0.1	-0.9	-0.2	-0.1	0.9	0.0
					649	-0.3	-1.2	4.7	-0.3	-0.8	0.0
					51	-0.7	-0.5	0.0	1.2	-0.4	0.0
					14	-2.2	0.8	-7.2	1.1	-0.2	0.0
619	1	1	SX (RS)		649	0.6	0.6	0.4	0.2	1.5	0.0
					650	1.2	0.1	1.7	0.2	1.2	0.0
					52	0.7	0.6	0.5	0.4	1.1	0.0
					51	1.3	0.1	1.9	0.7	1.7	0.0
			SY (RS)		649	0.5	0.4	3.1	0.8	0.2	0.0
					650	0.3	0.5	0.5	0.9	0.2	0.0
					52	0.6	0.3	0.5	0.3	0.2	0.0
					51	0.3	0.4	3.1	0.2	0.2	0.0
			RC ENV~1	Max	649	0.6	0.7	4.0	0.7	1.6	0.0
					650	1.5	0.3	8.6	0.7	1.8	0.0
					52	0.7	0.5	-0.2	1.5	2.4	0.0
					51	1.1	0.5	0.8	2.5	2.2	0.0
				Min	649	-0.6	-0.6	-2.3	-0.8	-1.3	0.0
					650	-1.0	-0.7	3.6	-1.2	-0.8	0.0
					52	-0.7	-0.6	-1.5	0.7	-0.4	0.0
					51	-1.6	-0.2	-5.3	0.9	-1.2	0.0
			RC ENV~2	Max	649	0.3	0.4	1.1	0.2	0.4	0.0
					650	0.9	-0.2	6.4	-0.0	1.2	0.0
					52	0.4	0.1	-0.3	1.2	1.7	0.0
					51	0.3	0.2	-1.0	1.9	0.9	0.0
				Min	649	-0.3	-0.1	-0.1	-0.0	-0.8	0.0
					650	-0.2	-0.3	5.1	-0.2	0.3	0.0
					52	-0.3	-0.3	-1.1	0.7	0.6	0.0
					51	-0.9	0.1	-3.7	1.3	-0.3	0.0

620	1	1	SX (RS)	650	0.4	0.4	0.7	0.2	1.1	0.0
				651	0.8	0.1	0.8	0.2	0.9	0.0
				53	0.4	0.3	0.4	0.2	0.9	0.0
				52	0.8	0.1	0.4	0.3	1.2	0.0
			SY (RS)	650	0.5	0.2	0.8	0.6	0.2	0.0
				651	0.2	0.4	0.8	0.6	0.3	0.0
				53	0.6	0.3	0.9	0.5	0.3	0.0
				52	0.2	0.4	1.0	0.7	0.3	0.0
			RC ENV~1 Max	650	0.6	0.4	2.0	0.8	0.4	0.0
				651	1.0	0.2	7.5	0.6	2.6	0.0
				53	0.6	0.3	-0.3	1.4	3.3	0.0
				52	0.7	0.6	-0.5	1.9	0.9	0.0
			Min	650	-0.5	-0.4	0.1	-0.4	-2.5	0.0
				651	-0.6	-0.5	3.8	-0.7	0.0	0.0
				53	-0.6	-0.4	-2.4	0.4	0.3	0.0
				52	-1.0	-0.3	-2.5	0.6	-1.7	0.0
			RC ENV~2 Max	650	0.2	0.1	1.3	0.5	-0.6	0.0
				651	0.6	-0.1	5.5	0.2	1.8	0.0
				53	0.3	0.1	-1.0	0.9	2.3	0.0
				52	0.1	0.3	-0.9	1.3	-0.2	0.0
			Min	650	-0.2	-0.1	0.3	0.2	-1.7	0.0
				651	-0.1	-0.2	4.5	-0.1	0.9	0.0
				53	-0.2	-0.1	-1.7	0.6	1.1	0.0
				52	-0.6	0.1	-1.9	1.0	-1.2	0.0
621	1	1	SX (RS)	651	0.2	0.3	0.6	0.1	0.9	0.0
				652	0.6	0.1	0.7	0.2	0.6	0.0
				54	0.2	0.2	0.4	0.1	0.6	0.0
				53	0.6	0.1	0.4	0.2	0.9	0.0
			SY (RS)	651	0.6	0.3	0.8	0.6	0.3	0.0
				652	0.0	0.3	0.8	0.5	0.3	0.0
				54	0.6	0.3	1.0	0.5	0.3	0.0
				53	0.1	0.3	1.0	0.4	0.3	0.0
			RC ENV~1 Max	651	0.6	0.3	2.8	0.9	-0.4	0.0
				652	0.7	0.2	6.7	0.6	2.9	0.0
				54	0.6	0.3	-0.7	1.4	3.6	0.0
				53	0.5	0.4	-0.2	1.6	0.1	0.0
			Min	651	-0.5	-0.3	1.1	-0.3	-3.4	0.0
				652	-0.5	-0.3	3.2	-0.5	0.6	0.0
				54	-0.6	-0.3	-3.3	0.4	0.8	0.0
				53	-0.7	-0.2	-2.1	0.7	-2.5	0.0
			RC ENV~2 Max	651	0.1	0.1	2.0	0.6	-1.2	0.0
				652	0.4	-0.1	4.9	0.2	2.1	0.0
				54	0.2	0.0	-1.6	0.9	2.5	0.0
				53	0.1	0.1	-0.4	1.2	-0.8	0.0
			Min	651	-0.2	-0.0	1.1	0.3	-2.4	0.0
				652	-0.1	-0.2	4.0	0.0	1.2	0.0
				54	-0.1	-0.1	-2.4	0.6	1.3	0.0
				53	-0.4	0.1	-1.3	1.0	-1.8	0.0
622	1	1	SX (RS)	652	0.1	0.2	0.6	0.1	0.6	0.0
				653	0.4	0.2	0.6	0.1	0.4	0.0
				55	0.1	0.2	0.5	0.1	0.3	0.0
				54	0.4	0.2	0.4	0.1	0.6	0.0
			SY (RS)	652	0.6	0.3	0.7	0.7	0.3	0.0
				653	0.1	0.2	1.1	0.5	0.4	0.0
				55	0.7	0.3	1.5	0.6	0.3	0.0

					54	0.2	0.3	1.0	0.4	0.3	0.0
			RC ENV~1	Max	652	0.6	0.3	3.4	1.0	-0.8	0.0
					653	0.5	0.2	5.7	0.6	2.6	0.0
					55	0.7	0.3	-0.7	1.5	3.3	0.0
					54	0.4	0.3	0.5	1.5	-0.5	0.0
				Min	652	-0.6	-0.3	2.0	-0.4	-3.7	0.0
					653	-0.4	-0.3	2.3	-0.4	0.8	0.0
					55	-0.6	-0.3	-4.4	0.4	0.9	0.0
					54	-0.5	-0.2	-1.8	0.8	-2.8	0.0
			RC ENV~2	Max	652	0.1	0.0	2.8	0.7	-1.4	0.0
					653	0.2	-0.0	4.2	0.2	1.9	0.0
					55	0.1	0.1	-2.1	1.0	2.3	0.0
					54	0.1	0.1	0.2	1.2	-1.1	0.0
				Min	652	-0.1	-0.1	1.8	0.3	-2.6	0.0
					653	-0.1	-0.1	3.4	-0.0	1.2	0.0
					55	-0.1	0.0	-3.2	0.6	1.3	0.0
					54	-0.3	0.0	-0.9	1.0	-2.0	0.0
623	1	1	SX (RS)		653	0.2	0.2	0.7	0.1	0.3	0.0
					654	0.3	0.3	0.5	0.1	0.1	0.0
					56	0.2	0.2	0.6	0.2	0.1	0.0
					55	0.3	0.2	0.5	0.1	0.4	0.0
			SY (RS)		653	0.7	0.4	0.8	0.9	0.3	0.0
					654	0.3	0.1	1.0	0.5	0.6	0.0
					56	0.7	0.5	1.6	1.0	0.2	0.0
					55	0.3	0.2	1.4	0.3	0.4	0.0
			RC ENV~1	Max	653	0.7	0.3	4.6	1.1	-1.0	0.0
					654	0.3	0.2	4.6	0.5	1.7	0.0
					56	0.8	0.6	-1.0	2.1	2.4	0.0
					55	0.3	0.3	1.6	1.7	-0.7	0.0
				Min	653	-0.7	-0.5	2.7	-0.7	-3.5	0.0
					654	-0.3	-0.3	1.8	-0.5	0.3	0.0
					56	-0.7	-0.4	-5.7	0.2	0.6	0.0
					55	-0.3	-0.2	-1.9	0.9	-2.6	0.0
			RC ENV~2	Max	653	-0.0	-0.0	3.6	0.6	-1.4	0.0
					654	0.1	-0.0	3.4	0.1	1.2	0.0
					56	0.1	0.2	-2.6	1.2	1.7	0.0
					55	0.1	0.1	0.9	1.3	-1.1	0.0
				Min	653	-0.1	-0.2	2.8	0.2	-2.4	0.0
					654	-0.1	-0.2	2.8	-0.1	0.8	0.0
					56	0.0	0.1	-4.1	0.8	0.9	0.0
					55	-0.1	0.0	-0.6	1.1	-1.8	0.0
624	1	1	SX (RS)		654	0.5	0.2	1.3	0.1	0.1	0.0
					655	0.2	0.4	0.2	0.0	0.5	0.0
					57	0.6	0.2	1.8	0.4	0.5	0.0
					56	0.2	0.4	0.5	0.3	0.1	0.0
			SY (RS)		654	0.8	0.5	0.6	1.3	0.2	0.0
					655	0.3	0.4	5.6	1.0	0.5	0.0
					57	0.8	0.4	5.7	0.8	0.3	0.0
					56	0.4	0.2	0.6	0.3	0.6	0.0
			RC ENV~1	Max	654	0.8	0.4	6.8	1.4	-0.8	0.0
					655	0.3	0.4	8.4	0.9	0.6	0.0
					57	0.8	0.5	1.8	2.6	0.9	0.0
					56	0.4	0.4	2.6	2.4	-0.3	0.0
				Min	654	-0.9	-0.6	3.4	-1.3	-2.6	0.0
					655	-0.4	-0.4	-2.9	-1.2	-0.3	0.0
					57	-0.8	-0.3	-9.5	0.9	-0.4	0.0

					56	-0.4	-0.3	-1.0	1.2	-1.7	0.0
			RC ENV~2	Max	654	0.0	-0.1	5.2	0.4	-1.0	0.0
					655	0.0	0.1	3.2	-0.1	0.3	0.0
					57	0.2	0.2	-3.8	1.9	0.6	0.0
					56	0.1	0.2	1.6	1.8	-0.8	0.0
				Min	654	-0.1	-0.2	4.1	0.0	-1.8	0.0
					655	-0.1	-0.1	2.7	-0.4	-0.2	0.0
					57	-0.0	0.1	-6.3	1.4	0.1	0.0
					56	-0.0	-0.0	-0.4	1.5	-1.2	0.0
625	1	1	SX (RS)		655	1.1	0.6	3.4	0.3	0.6	0.0
					656	0.3	0.6	1.3	0.2	0.5	0.0
					15	1.7	0.7	3.8	0.9	3.5	0.0
					57	0.4	0.7	1.7	0.3	0.4	0.0
			SY (RS)		655	1.2	2.0	5.2	2.1	0.4	0.0
					656	0.9	1.4	3.0	1.9	0.3	0.0
					15	1.4	3.2	5.2	7.3	0.8	0.0
					57	0.8	0.2	3.1	1.1	1.0	0.0
			RC ENV~1	Max	655	1.1	1.6	12.3	2.3	0.2	0.0
					656	0.7	1.0	7.4	2.4	-0.7	0.0
					15	1.8	3.9	-3.9	9.7	1.5	0.0
					57	1.0	0.8	5.7	3.7	0.7	0.0
				Min	655	-1.4	-2.4	1.9	-1.9	-1.2	0.0
					656	-1.1	-1.7	1.4	-1.5	-3.1	0.0
					15	-1.5	-2.6	-17.8	-4.9	-5.4	-0.0
					57	-0.7	-0.5	-2.3	1.2	-1.2	0.0
			RC ENV~2	Max	655	0.1	-0.2	8.5	0.6	-0.3	0.0
					656	-0.0	-0.2	4.9	0.5	-1.1	0.0
					15	0.6	1.3	-8.9	2.7	-1.2	0.0
					57	0.3	0.3	3.8	2.8	0.1	0.0
				Min	655	-0.4	-0.9	6.2	0.1	-0.8	0.0
					656	-0.4	-0.7	3.8	0.1	-2.2	0.0
					15	-0.3	0.4	-13.0	1.9	-3.5	-0.0
					57	0.1	-0.0	0.7	2.3	-0.3	0.0
626	1	1	SX (RS)		602	0.8	0.2	4.4	1.2	1.5	0.0
					603	0.7	0.2	1.2	1.0	0.7	0.0
					658	0.7	0.1	2.3	0.3	0.6	0.0
					657	0.6	0.3	1.1	0.2	1.6	0.0
			SY (RS)		602	0.6	0.0	5.4	1.9	0.1	0.0
					603	0.3	0.6	1.5	1.1	0.3	0.0
					658	0.7	0.2	0.5	0.5	0.1	0.0
					657	0.2	0.8	6.3	0.4	0.1	0.0
			RC ENV~1	Max	602	1.0	-0.1	2.4	1.4	1.0	0.0
					603	0.5	0.3	9.2	0.2	1.4	0.0
					658	0.5	0.6	3.4	0.9	1.9	0.0
					657	0.9	1.0	8.1	3.3	3.0	0.0
				Min	602	-0.6	-0.6	-8.5	-2.5	-2.1	0.0
					603	-1.0	-0.8	1.8	-3.1	-1.1	0.0
					658	-0.9	0.0	-3.3	-0.5	0.6	0.0
					657	-0.4	-0.6	-4.6	0.5	-1.3	0.0
			RC ENV~2	Max	602	0.5	-0.2	-2.4	-0.3	0.3	0.0
					603	-0.1	-0.2	6.5	-0.8	0.7	0.0
					658	-0.0	0.4	1.4	0.6	1.2	0.0
					657	0.5	0.4	3.1	2.2	2.0	0.0
				Min	602	0.0	-0.4	-6.0	-1.5	-0.6	0.0
					603	-0.5	-0.4	3.2	-2.1	-0.6	0.0
					658	-0.5	0.2	-1.9	-0.0	0.6	0.0

				657	0.1	0.1	1.7	0.8	0.2	0.0
627	1	1	SX (RS)	603	0.5	0.2	1.2	0.5	0.7	0.0
				604	0.6	0.1	1.0	0.5	0.5	0.0
				659	0.4	0.1	0.7	0.3	0.6	0.0
				658	0.6	0.1	0.4	0.5	0.8	0.0
			SY (RS)	603	0.5	0.3	0.7	0.2	0.2	0.0
				604	0.3	0.5	0.8	0.5	0.2	0.0
				659	0.5	0.3	0.7	0.2	0.2	0.0
				658	0.3	0.4	0.7	0.4	0.3	0.0
			RC ENV~1 Max	603	0.7	0.1	0.4	0.5	-0.4	0.0
				604	0.3	0.3	7.3	0.2	1.5	0.0
				659	0.3	0.6	1.0	0.7	1.8	0.0
				658	0.8	0.7	2.5	2.4	1.4	0.0
			Min	603	-0.3	-0.6	-3.2	-0.6	-1.8	0.0
				604	-0.8	-0.7	1.3	-1.6	-0.6	0.0
				659	-0.7	-0.0	-3.5	-0.4	0.4	0.0
				658	-0.3	-0.2	0.7	-0.1	-1.4	0.0
			RC ENV~2 Max	603	0.4	-0.2	-0.5	0.2	-0.5	0.0
				604	-0.2	-0.2	5.0	-0.3	1.0	0.0
				659	-0.1	0.4	0.4	0.4	1.3	0.0
				658	0.5	0.4	1.8	1.6	0.8	0.0
			Min	603	0.1	-0.4	-2.3	-0.4	-1.1	0.0
				604	-0.5	-0.4	2.2	-1.1	-0.2	0.0
				659	-0.4	0.2	-2.2	-0.1	0.5	0.0
				658	0.2	0.2	1.4	0.4	-0.6	0.0
628	1	1	SX (RS)	604	0.4	0.1	1.0	0.4	0.6	0.0
				605	0.5	0.2	0.9	0.4	0.7	0.0
				660	0.4	0.1	0.4	0.3	0.7	0.0
				659	0.5	0.1	0.3	0.3	0.6	0.0
			SY (RS)	604	0.5	0.3	0.8	0.4	0.1	0.0
				605	0.3	0.5	0.5	0.5	0.1	0.0
				660	0.5	0.3	0.4	0.3	0.2	0.0
				659	0.3	0.5	0.7	0.4	0.1	0.0
			RC ENV~1 Max	604	0.7	-0.0	1.5	0.5	-0.4	0.0
				605	0.2	0.3	5.4	0.3	1.6	0.0
				660	0.3	0.6	0.3	0.9	1.8	0.0
				659	0.8	0.7	2.0	1.9	0.7	0.0
			Min	604	-0.3	-0.6	-0.6	-0.3	-1.8	0.0
				605	-0.8	-0.7	0.6	-0.9	-0.5	0.0
				660	-0.7	0.0	-3.1	-0.3	-0.0	0.0
				659	-0.2	-0.3	0.6	-0.2	-1.5	0.0
			RC ENV~2 Max	604	0.4	-0.2	1.0	0.2	-0.5	0.0
				605	-0.3	-0.2	3.7	-0.1	1.0	0.0
				660	-0.2	0.5	-0.0	0.6	1.2	0.0
				659	0.5	0.3	1.3	1.2	0.3	0.0
			Min	604	0.2	-0.4	-0.2	-0.2	-1.3	0.0
				605	-0.6	-0.3	1.4	-0.6	-0.2	0.0
				660	-0.4	0.2	-1.9	-0.0	0.2	0.0
				659	0.2	0.2	1.0	0.2	-0.9	0.0
629	1	1	SX (RS)	605	0.4	0.1	0.9	0.4	0.7	0.0
				606	0.6	0.2	0.9	0.4	0.9	0.0
				661	0.4	0.1	0.2	0.4	1.0	0.0
				660	0.6	0.2	0.4	0.3	0.6	0.0
			SY (RS)	605	0.6	0.3	0.5	0.4	0.2	0.0
				606	0.4	0.5	0.6	0.4	0.0	0.0

					661	0.5	0.3	0.4	0.3	0.2	0.0
					660	0.4	0.5	0.4	0.4	0.1	0.0
			RC ENV~1	Max	605	0.8	0.0	3.2	0.4	-0.0	0.0
					606	0.2	0.3	3.4	0.2	1.6	0.0
					661	0.3	0.7	0.1	1.4	1.6	0.0
					660	0.9	0.7	1.9	1.6	0.5	0.0
				Min	605	-0.3	-0.7	0.6	-0.5	-1.8	0.0
					606	-1.0	-0.7	-0.4	-0.9	-0.8	0.0
					661	-0.8	-0.0	-2.5	-0.2	-0.8	0.0
					660	-0.2	-0.3	0.6	-0.2	-1.6	0.0
			RC ENV~2	Max	605	0.5	-0.2	2.3	0.1	-0.2	0.0
					606	-0.2	-0.2	2.2	-0.2	0.7	0.0
					661	-0.1	0.5	-0.3	0.9	0.8	0.0
					660	0.7	0.3	1.5	1.1	0.2	0.0
				Min	605	0.1	-0.5	1.4	-0.3	-1.2	0.0
					606	-0.7	-0.3	0.4	-0.6	-0.4	0.0
					661	-0.5	0.2	-1.6	0.2	-0.4	0.0
					660	0.2	0.2	0.6	0.2	-1.0	0.0
630	1	1	SX (RS)		606	0.6	0.2	0.9	0.6	0.9	0.0
					607	0.7	0.2	1.1	0.6	1.2	0.0
					662	0.5	0.2	0.4	0.6	1.3	0.0
					661	0.7	0.2	0.6	0.4	0.9	0.0
			SY (RS)		606	0.6	0.4	0.6	0.4	0.2	0.0
					607	0.4	0.5	0.6	0.2	0.1	0.0
					662	0.6	0.4	0.4	0.3	0.3	0.0
					661	0.5	0.5	0.5	0.3	0.0	0.0
			RC ENV~1	Max	606	0.9	0.1	5.3	0.2	0.6	0.0
					607	0.3	0.4	1.2	0.1	1.2	0.0
					662	0.3	0.8	-0.1	2.1	1.2	0.0
					661	1.2	0.7	2.6	1.6	0.7	0.0
				Min	606	-0.3	-0.7	1.5	-1.2	-1.7	0.0
					607	-1.2	-0.7	-1.8	-1.4	-1.5	0.0
					662	-0.9	-0.0	-1.9	-0.0	-2.0	0.0
					661	-0.3	-0.3	0.3	-0.0	-1.6	0.0
			RC ENV~2	Max	606	0.6	-0.2	3.8	-0.2	0.3	0.0
					607	-0.2	-0.1	0.6	-0.3	0.1	0.0
					662	-0.1	0.6	-0.5	1.5	-0.1	0.0
					661	0.8	0.3	2.0	1.1	0.3	0.0
				Min	606	0.1	-0.5	2.4	-0.9	-0.8	0.0
					607	-0.9	-0.3	-1.0	-1.0	-0.9	0.0
					662	-0.6	0.2	-1.3	0.5	-1.3	0.0
					661	0.2	0.2	0.5	0.3	-0.8	0.0
631	1	1	SX (RS)		607	0.8	0.4	1.0	1.0	1.2	0.0
					608	1.2	0.3	3.4	1.1	1.9	0.0
					663	0.7	0.5	0.8	0.4	2.0	0.0
					662	1.1	0.2	1.8	0.4	1.2	0.0
			SY (RS)		607	0.7	0.5	0.9	0.7	0.3	0.0
					608	0.6	0.3	3.0	1.1	0.2	0.0
					663	0.6	0.7	3.4	0.1	0.4	0.0
					662	0.6	0.5	0.2	0.3	0.1	0.0
			RC ENV~1	Max	607	1.2	0.2	7.5	-0.1	1.7	0.0
					608	0.6	0.1	-0.1	-0.1	0.6	0.0
					663	0.4	1.1	3.2	2.7	0.3	0.0
					662	1.7	0.6	5.0	1.7	1.3	0.0
				Min	607	-0.4	-1.0	2.6	-2.9	-1.2	0.0
					608	-1.8	-0.5	-8.3	-3.1	-3.4	0.0

					663	-1.0	-0.3	-3.6	0.6	-4.4	0.0
					662	-0.5	-0.3	1.2	0.2	-1.3	0.0
			RC ENV~2	Max	607	0.8	-0.2	5.4	-0.8	1.1	0.0
					608	-0.1	-0.1	-1.9	-0.9	-1.0	0.0
					663	-0.1	0.8	0.2	1.9	-1.4	0.0
					662	1.2	0.3	3.9	1.2	0.8	0.0
				Min	607	0.1	-0.7	3.5	-2.1	-0.1	0.0
					608	-1.3	-0.3	-6.0	-2.3	-2.4	0.0
					663	-0.7	0.1	-0.5	0.9	-3.1	0.0
					662	0.1	0.1	1.3	0.6	-0.2	0.0
632	1	1	SX (RS)		608	1.3	1.0	3.3	1.0	1.9	0.0
					13	3.0	0.9	7.4	2.0	7.6	0.0
					231	0.2	0.9	2.0	0.4	1.8	0.0
					663	2.0	0.8	6.2	0.8	2.1	0.0
			SY (RS)		608	1.3	0.4	1.9	0.3	0.5	0.0
					13	1.5	3.2	5.3	4.3	1.9	0.0
					231	1.3	0.9	2.4	0.5	0.5	0.0
					663	1.3	2.0	4.3	0.6	0.4	0.0
			RC ENV~1	Max	608	1.9	0.4	13.7	-1.5	3.8	0.0
					13	1.7	3.4	-5.5	0.9	1.2	0.0
					231	1.2	1.6	3.9	1.6	-1.9	0.0
					663	2.9	1.9	17.0	2.0	3.3	0.0
				Min	608	-0.7	-1.7	3.0	-5.7	-0.6	0.0
					13	-4.4	-3.0	-29.9	-7.7	-15.7	-0.0
					231	-1.4	-0.4	-1.1	0.1	-7.8	0.0
					663	-1.1	-2.1	2.3	-0.0	-0.9	0.0
			RC ENV~2	Max	608	1.4	-0.1	9.9	-2.1	2.7	0.0
					13	0.0	0.5	-10.1	-2.5	-4.2	-0.0
					231	-0.1	1.1	2.7	1.1	-3.4	0.0
					663	2.0	0.2	12.6	1.4	2.3	0.0
				Min	608	0.1	-1.2	5.7	-4.1	1.1	0.0
					13	-3.1	-0.2	-21.6	-5.5	-11.3	-0.0
					231	-0.3	0.1	1.4	0.6	-5.7	0.0
					663	0.0	-0.5	5.4	0.6	0.9	0.0
633	1	1	SX (RS)		616	0.2	0.1	5.0	0.2	1.4	0.0
					657	0.2	0.2	6.7	0.3	1.0	0.0
					664	0.1	0.2	0.2	0.1	1.1	0.0
					624	0.1	0.1	1.9	0.3	0.6	0.0
			SY (RS)		616	0.2	1.3	4.6	1.2	1.0	0.0
					657	0.6	0.4	0.7	1.0	0.1	0.0
					664	0.3	1.1	2.4	0.2	0.1	0.0
					624	0.5	0.6	1.5	0.2	0.9	0.0
			RC ENV~1	Max	616	0.6	1.1	1.9	1.5	1.7	0.0
					657	0.4	0.2	7.1	0.5	0.6	0.0
					664	0.1	1.3	3.8	-1.0	1.5	0.0
					624	0.7	0.9	11.3	0.2	2.4	0.0
				Min	616	-0.0	-1.6	-8.7	-0.9	-1.3	0.0
					657	-0.8	-0.7	-6.3	-2.7	-3.5	0.0
					664	-0.5	-0.8	-2.8	-1.6	-0.9	0.0
					624	-0.3	-0.4	2.5	-1.2	-0.7	0.0
			RC ENV~2	Max	616	0.4	-0.3	-3.0	0.3	1.1	0.0
					657	-0.2	-0.2	2.3	-0.5	-0.4	0.0
					664	-0.1	0.5	1.6	-1.0	0.4	0.0
					624	0.4	0.4	8.0	-0.0	1.6	0.0
				Min	616	0.1	-0.5	-6.2	-0.2	-0.1	0.0
					657	-0.4	-0.4	0.1	-1.8	-2.3	0.0

				664	-0.4	0.2	-1.5	-1.2	-0.5	0.0
				624	0.2	0.2	4.3	-0.9	0.2	0.0
634	1	1	SX (RS)	657	0.6	0.3	2.5	0.7	1.2	0.0
				658	0.3	0.1	0.7	0.5	0.7	0.0
				665	0.4	0.3	1.4	0.2	0.7	0.0
				664	0.2	0.1	1.3	0.2	0.8	0.0
			SY (RS)	657	0.9	0.9	1.7	0.6	0.5	0.0
				658	0.3	0.5	0.8	0.2	0.3	0.0
				665	0.8	0.7	1.3	0.2	0.2	0.0
				664	0.4	0.3	0.4	0.2	0.3	0.0
			RC ENV~1 Max	657	1.1	0.6	-0.7	0.9	0.6	0.0
				658	0.1	0.3	6.8	-0.0	1.1	0.0
				665	0.6	0.9	2.0	-0.2	1.6	0.0
				664	0.6	0.6	8.2	1.5	2.9	0.0
			Min	657	-0.8	-1.2	-9.7	-0.6	-1.7	0.0
				658	-0.6	-0.7	1.7	-2.7	-2.1	0.0
				665	-1.0	-0.4	-3.4	-0.9	-0.1	0.0
				664	-0.2	-0.1	2.0	-0.5	-0.7	0.0
			RC ENV~2 Max	657	0.4	-0.2	-3.1	0.2	0.3	0.0
				658	-0.2	-0.2	4.8	-0.5	0.4	0.0
				665	-0.0	0.5	0.7	-0.3	1.0	0.0
				664	0.4	0.4	5.8	0.9	1.9	0.0
			Min	657	0.0	-0.5	-6.8	-0.4	-0.6	0.0
				658	-0.4	-0.4	2.5	-1.8	-1.3	0.0
				665	-0.4	0.2	-2.0	-0.7	0.1	0.0
				664	0.2	0.2	3.3	-0.2	0.1	0.0
635	1	1	SX (RS)	658	0.4	0.1	1.7	0.3	0.6	0.0
				659	0.4	0.1	0.9	0.4	0.5	0.0
				666	0.3	0.1	0.5	0.2	0.5	0.0
				665	0.4	0.1	0.4	0.1	0.7	0.0
			SY (RS)	658	0.6	0.2	0.5	0.2	0.1	0.0
				659	0.3	0.5	0.3	0.3	0.2	0.0
				666	0.6	0.3	0.5	0.3	0.2	0.0
				665	0.3	0.5	0.7	0.2	0.1	0.0
			RC ENV~1 Max	658	0.7	-0.0	0.8	0.5	-0.0	0.0
				659	0.2	0.3	6.1	0.1	1.3	0.0
				666	0.4	0.6	0.7	0.6	1.6	0.0
				665	0.6	0.7	4.5	2.1	2.0	0.0
			Min	658	-0.4	-0.6	-4.4	-0.4	-1.6	0.0
				659	-0.7	-0.7	1.1	-2.0	-1.3	0.0
				666	-0.7	0.0	-3.0	-0.5	-0.3	0.0
				665	-0.1	-0.4	1.2	-0.1	-1.1	0.0
			RC ENV~2 Max	658	0.3	-0.2	-0.7	0.2	-0.2	0.0
				659	-0.2	-0.2	4.3	-0.2	0.7	0.0
				666	-0.1	0.4	0.2	0.3	1.1	0.0
				665	0.4	0.3	3.2	1.3	1.2	0.0
			Min	658	0.1	-0.4	-3.0	-0.2	-1.0	0.0
				659	-0.4	-0.3	2.0	-1.3	-0.7	0.0
				666	-0.3	0.2	-1.9	-0.3	0.0	0.0
				665	0.2	0.1	1.9	0.1	-0.5	0.0
636	1	1	SX (RS)	659	0.3	0.1	1.3	0.3	0.5	0.0
				660	0.5	0.2	1.0	0.3	0.6	0.0
				667	0.3	0.1	0.2	0.2	0.7	0.0
				666	0.4	0.2	0.4	0.2	0.5	0.0
			SY (RS)	659	0.5	0.3	0.4	0.3	0.2	0.0

					660	0.3	0.5	0.4	0.4	0.2	0.0
					667	0.5	0.3	0.5	0.3	0.2	0.0
					666	0.4	0.5	0.4	0.4	0.2	0.0
			RC ENV~1	Max	659	0.7	-0.0	1.8	0.4	0.2	0.0
					660	0.2	0.3	4.5	0.2	1.4	0.0
					667	0.4	0.6	0.5	1.2	1.6	0.0
					666	0.7	0.7	2.7	2.0	1.3	0.0
				Min	659	-0.4	-0.6	-1.1	-0.6	-1.6	0.0
					660	-0.7	-0.7	0.3	-1.5	-1.1	0.0
					667	-0.6	0.0	-2.3	-0.3	-0.7	0.0
					666	-0.2	-0.3	0.9	-0.2	-1.3	0.0
			RC ENV~2	Max	659	0.3	-0.2	0.8	0.1	-0.1	0.0
					660	-0.2	-0.1	3.1	-0.1	0.9	0.0
					667	-0.1	0.5	0.0	0.7	1.0	0.0
					666	0.5	0.3	2.0	1.3	0.6	0.0
				Min	659	0.1	-0.5	-0.6	-0.4	-1.1	0.0
					660	-0.5	-0.3	1.2	-1.0	-0.6	0.0
					667	-0.3	0.2	-1.5	-0.0	-0.3	0.0
					666	0.2	0.1	1.3	0.1	-0.8	0.0
637	1	1	SX (RS)		660	0.3	0.1	1.1	0.4	0.7	0.0
					661	0.5	0.2	1.1	0.3	0.9	0.0
					668	0.3	0.1	0.1	0.3	1.0	0.0
					667	0.5	0.2	0.4	0.2	0.6	0.0
			SY (RS)		660	0.5	0.3	0.5	0.3	0.2	0.0
					661	0.4	0.5	0.5	0.3	0.1	0.0
					668	0.5	0.3	0.4	0.3	0.2	0.0
					667	0.4	0.5	0.4	0.4	0.2	0.0
			RC ENV~1	Max	660	0.7	0.0	2.8	0.3	0.6	0.0
					661	0.2	0.3	2.5	0.2	1.4	0.0
					668	0.4	0.7	0.5	1.6	1.5	0.0
					667	0.8	0.6	2.0	1.8	1.1	0.0
				Min	660	-0.4	-0.7	0.5	-1.1	-1.7	0.0
					661	-0.9	-0.6	-0.9	-1.4	-1.3	0.0
					668	-0.6	-0.0	-1.4	-0.1	-1.4	0.0
					667	-0.2	-0.3	0.8	-0.2	-1.5	0.0
			RC ENV~2	Max	660	0.3	-0.2	2.0	-0.1	0.2	0.0
					661	-0.2	-0.1	1.7	-0.2	0.6	0.0
					668	-0.1	0.5	0.1	1.1	0.6	0.0
					667	0.6	0.2	1.5	1.2	0.6	0.0
				Min	660	0.1	-0.5	1.1	-0.7	-1.0	0.0
					661	-0.6	-0.2	0.1	-0.9	-0.7	0.0
					668	-0.3	0.2	-0.9	0.2	-0.8	0.0
					667	0.2	0.1	0.9	0.2	-0.9	0.0
638	1	1	SX (RS)		661	0.3	0.2	1.0	0.5	1.0	0.0
					662	0.7	0.2	1.4	0.4	1.1	0.0
					669	0.3	0.2	0.4	0.3	1.3	0.0
					668	0.6	0.2	0.7	0.2	0.8	0.0
			SY (RS)		661	0.5	0.4	0.4	0.3	0.2	0.0
					662	0.5	0.4	0.6	0.3	0.1	0.0
					669	0.5	0.4	0.5	0.3	0.2	0.0
					668	0.5	0.5	0.4	0.4	0.1	0.0
			RC ENV~1	Max	661	0.7	0.1	4.3	0.1	1.4	0.0
					662	0.3	0.3	0.3	0.1	1.1	0.0
					669	0.4	0.8	0.7	1.9	1.0	0.0
					668	1.1	0.6	2.2	1.5	1.3	0.0
				Min	661	-0.4	-0.8	1.5	-1.7	-1.5	0.0

					662	-1.2	-0.6	-2.6	-1.4	-1.8	0.0
					669	-0.6	-0.1	-0.2	0.1	-2.5	0.0
					668	-0.3	-0.4	0.7	-0.2	-1.4	0.0
			RC ENV~2	Max	661	0.3	-0.2	3.2	-0.4	0.8	0.0
					662	-0.2	-0.1	-0.0	-0.3	0.0	0.0
					669	-0.1	0.6	0.5	1.3	-0.2	0.0
					668	0.8	0.2	1.7	1.0	0.7	0.0
				Min	661	0.1	-0.6	2.3	-1.1	-0.6	0.0
					662	-0.8	-0.2	-1.9	-0.9	-1.2	0.0
					669	-0.2	0.2	-0.1	0.4	-1.6	0.0
					668	0.2	0.1	0.7	0.2	-0.7	0.0
639	1	1	SX (RS)		662	0.3	0.3	0.8	0.6	1.3	0.0
					663	1.0	0.5	2.0	0.7	1.6	0.0
					670	0.1	0.2	1.1	0.3	1.4	0.0
					669	0.8	0.4	1.2	0.1	1.2	0.0
			SY (RS)		662	0.6	0.5	0.4	0.1	0.3	0.0
					663	0.8	1.0	1.2	0.3	0.3	0.0
					670	0.6	0.4	0.5	0.2	0.2	0.0
					669	0.7	0.8	0.8	0.3	0.2	0.0
			RC ENV~1	Max	662	0.7	0.1	4.9	-0.2	2.6	0.0
					663	0.5	1.0	-1.3	0.0	0.5	0.0
					670	0.6	0.8	3.4	1.6	0.0	0.0
					669	1.3	0.8	3.6	1.0	1.9	0.0
				Min	662	-0.5	-1.0	2.1	-2.5	-1.0	0.0
					663	-1.6	-0.9	-7.5	-1.9	-3.3	0.0
					670	-0.7	-0.0	0.1	0.1	-4.0	0.0
					669	-0.4	-0.8	0.8	-0.2	-1.2	0.0
			RC ENV~2	Max	662	0.3	-0.2	3.6	-0.8	1.7	0.0
					663	-0.1	0.2	-2.2	-0.6	-1.1	0.0
					670	-0.0	0.6	2.4	1.1	-1.3	0.0
					669	0.9	0.2	2.7	0.7	1.2	0.0
				Min	662	0.1	-0.7	2.9	-1.8	0.2	0.0
					663	-1.1	-0.2	-5.4	-1.4	-2.3	0.0
					670	-0.1	0.2	0.9	0.3	-2.8	0.0
					669	0.1	-0.1	0.9	0.1	-0.0	0.0
640	1	1	SX (RS)		663	0.2	0.3	5.2	0.5	1.5	0.0
					231	0.4	0.4	4.0	0.4	0.3	0.0
					234	0.1	0.3	1.6	0.4	0.4	0.0
					670	0.5	0.4	0.7	0.2	1.6	0.0
			SY (RS)		663	0.8	0.3	0.9	0.4	0.3	0.0
					231	0.3	1.3	2.5	0.6	0.6	0.0
					234	0.7	0.4	0.9	0.3	0.4	0.0
					670	0.4	1.1	1.5	0.3	0.2	0.0
			RC ENV~1	Max	663	0.7	0.0	5.4	-0.6	4.5	0.0
					231	0.2	1.2	2.5	-0.2	-1.1	0.0
					234	0.7	0.9	5.2	1.1	-1.6	0.0
					670	0.9	1.2	4.5	0.6	3.5	0.0
				Min	663	-0.8	-0.8	-5.1	-2.7	0.0	0.0
					231	-0.7	-1.4	-5.5	-1.8	-2.8	0.0
					234	-0.7	-0.1	-0.1	-0.1	-3.9	0.0
					670	-0.2	-1.1	1.2	-0.2	-0.4	0.0
			RC ENV~2	Max	663	0.1	-0.2	1.6	-1.0	3.1	0.0
					231	-0.1	-0.0	-0.7	-0.7	-1.7	0.0
					234	0.1	0.6	3.6	0.8	-1.9	0.0
					670	0.6	0.1	3.2	0.4	2.4	0.0
				Min	663	-0.1	-0.6	-2.4	-1.9	1.5	0.0

					231	-0.5	-0.1	-2.0	-1.3	-2.1	0.0
					234	-0.1	0.2	1.4	0.2	-2.8	0.0
					670	0.1	-0.1	1.3	0.1	1.1	0.0
641	1	1	SX (RS)		624	0.1	0.1	1.1	0.2	0.6	0.0
					664	0.2	0.2	1.3	0.3	0.2	0.0
					671	0.2	0.1	0.8	0.1	0.5	0.0
					632	0.2	0.2	0.6	0.2	0.1	0.0
			SY (RS)		624	0.1	0.5	1.4	0.2	0.4	0.0
					664	0.3	0.2	0.5	0.3	0.4	0.0
					671	0.2	0.5	0.9	0.5	0.2	0.0
					632	0.2	0.3	1.0	0.4	0.4	0.0
			RC ENV~1	Max	624	0.5	0.3	1.4	1.3	0.3	0.0
					664	0.1	0.0	1.2	0.9	0.5	0.0
					671	0.0	0.7	1.6	-0.8	0.9	0.0
					632	0.4	0.6	8.1	-0.4	1.0	0.0
				Min	624	0.0	-0.8	-2.4	0.8	-1.1	0.0
					664	-0.5	-0.6	-1.4	-0.6	-2.5	0.0
					671	-0.4	-0.2	-3.4	-2.0	-0.9	0.0
					632	-0.1	-0.0	1.6	-1.8	-0.9	0.0
			RC ENV~2	Max	624	0.3	-0.2	-0.0	1.0	0.1	0.0
					664	-0.1	-0.2	0.6	0.7	0.1	0.0
					671	-0.1	0.4	0.8	-1.0	0.4	0.0
					632	0.3	0.4	5.6	-0.5	0.6	0.0
				Min	624	0.1	-0.4	-1.5	0.9	-0.6	0.0
					664	-0.4	-0.4	-0.2	-0.3	-1.6	0.0
					671	-0.3	0.2	-2.0	-1.5	-0.5	0.0
					632	0.1	0.2	2.6	-1.4	-0.6	0.0
642	1	1	SX (RS)		664	0.2	0.1	0.6	0.2	0.5	0.0
					665	0.2	0.2	1.0	0.0	0.5	0.0
					672	0.2	0.1	0.5	0.2	0.5	0.0
					671	0.2	0.2	0.1	0.2	0.3	0.0
			SY (RS)		664	0.5	0.6	1.5	0.2	0.2	0.0
					665	0.4	0.4	0.1	0.2	0.1	0.0
					672	0.5	0.5	0.7	0.5	0.2	0.0
					671	0.4	0.4	0.7	0.4	0.3	0.0
			RC ENV~1	Max	664	0.6	0.3	0.8	1.0	0.5	0.0
					665	0.2	0.2	3.6	0.4	0.8	0.0
					672	0.4	0.7	1.2	-0.3	1.2	0.0
					671	0.6	0.6	6.7	0.6	2.1	0.0
				Min	664	-0.3	-0.8	-4.2	0.4	-1.1	0.0
					665	-0.6	-0.6	0.1	-1.5	-2.4	0.0
					672	-0.6	-0.2	-2.8	-1.3	-0.8	0.0
					671	-0.2	-0.1	1.6	-1.2	-0.6	0.0
			RC ENV~2	Max	664	0.3	-0.2	-0.6	0.8	0.2	0.0
					665	-0.2	-0.2	2.5	0.2	0.3	0.0
					672	-0.1	0.4	0.6	-0.3	0.6	0.0
					671	0.3	0.4	4.7	0.2	1.3	0.0
				Min	664	0.1	-0.4	-2.8	0.4	-0.6	0.0
					665	-0.3	-0.3	1.0	-0.9	-1.5	0.0
					672	-0.3	0.2	-1.7	-0.9	-0.4	0.0
					671	0.1	0.2	2.3	-0.8	-0.4	0.0
643	1	1	SX (RS)		665	0.2	0.1	1.2	0.2	0.5	0.0
					666	0.3	0.2	0.7	0.2	0.5	0.0
					673	0.2	0.1	0.4	0.2	0.5	0.0
					672	0.3	0.2	0.4	0.1	0.5	0.0

			SY (RS)	665	0.6	0.4	0.6	0.3	0.2	0.0
				666	0.4	0.5	0.1	0.3	0.2	0.0
				673	0.5	0.3	0.5	0.4	0.2	0.0
				672	0.4	0.5	0.3	0.4	0.1	0.0
		RC ENV~1	Max	665	0.7	0.1	0.9	0.6	0.5	0.0
				666	0.2	0.4	4.1	0.3	1.1	0.0
				673	0.4	0.6	1.0	0.5	1.3	0.0
				672	0.6	0.7	4.7	1.3	2.0	0.0
			Min	665	-0.5	-0.6	-3.3	-0.3	-1.3	0.0
				666	-0.6	-0.7	0.5	-1.8	-1.8	0.0
				673	-0.6	-0.1	-2.0	-0.8	-0.9	0.0
				672	-0.2	-0.3	1.3	-0.7	-1.0	0.0
		RC ENV~2	Max	665	0.2	-0.2	-0.2	0.4	0.2	0.0
				666	-0.2	-0.1	2.9	0.0	0.6	0.0
				673	-0.1	0.4	0.6	0.3	0.8	0.0
				672	0.3	0.3	3.3	0.8	1.2	0.0
			Min	665	0.1	-0.4	-2.2	-0.1	-0.8	0.0
				666	-0.4	-0.3	1.2	-1.1	-1.0	0.0
				673	-0.2	0.2	-1.2	-0.5	-0.4	0.0
				672	0.1	0.2	1.6	-0.3	-0.5	0.0
644	1	1	SX (RS)	666	0.3	0.1	1.1	0.2	0.5	0.0
				667	0.4	0.2	0.9	0.2	0.6	0.0
				674	0.2	0.1	0.1	0.2	0.7	0.0
				673	0.3	0.2	0.4	0.1	0.5	0.0
			SY (RS)	666	0.5	0.3	0.3	0.3	0.2	0.0
				667	0.4	0.5	0.4	0.4	0.2	0.0
				674	0.5	0.3	0.4	0.4	0.2	0.0
				673	0.4	0.5	0.3	0.5	0.1	0.0
		RC ENV~1	Max	666	0.6	0.0	1.7	0.4	0.8	0.0
				667	0.2	0.4	3.2	0.3	1.3	0.0
				674	0.4	0.6	0.9	1.1	1.4	0.0
				673	0.6	0.6	3.2	1.6	1.6	0.0
			Min	666	-0.4	-0.6	-1.2	-0.9	-1.4	0.0
				667	-0.6	-0.6	-0.2	-1.7	-1.6	0.0
				674	-0.5	-0.0	-1.3	-0.5	-1.2	0.0
				673	-0.2	-0.4	0.9	-0.5	-1.2	0.0
		RC ENV~2	Max	666	0.2	-0.2	0.7	0.1	0.3	0.0
				667	-0.2	-0.1	2.2	-0.1	0.7	0.0
				674	-0.0	0.4	0.5	0.7	0.8	0.0
				673	0.4	0.2	2.3	1.0	0.9	0.0
			Min	666	0.1	-0.4	-0.7	-0.5	-0.9	0.0
				667	-0.4	-0.2	0.7	-1.1	-0.9	0.0
				674	-0.1	0.2	-0.7	-0.1	-0.7	0.0
				673	0.1	0.1	1.3	-0.1	-0.7	0.0
645	1	1	SX (RS)	667	0.3	0.1	1.0	0.3	0.7	0.0
				668	0.4	0.2	1.0	0.2	0.8	0.0
				675	0.2	0.1	0.2	0.2	1.0	0.0
				674	0.4	0.2	0.5	0.1	0.6	0.0
			SY (RS)	667	0.5	0.3	0.3	0.3	0.2	0.0
				668	0.4	0.4	0.5	0.4	0.2	0.0
				675	0.4	0.4	0.4	0.4	0.2	0.0
				674	0.5	0.5	0.3	0.5	0.2	0.0
		RC ENV~1	Max	667	0.5	0.0	2.4	0.2	1.2	0.0
				668	0.2	0.4	1.8	0.3	1.3	0.0
				675	0.4	0.6	0.8	1.4	1.3	0.0
				674	0.7	0.6	2.5	1.6	1.6	0.0

				Min	667	-0.4	-0.6	0.3	-1.3	-1.5	0.0
					668	-0.7	-0.5	-1.1	-1.5	-1.8	0.0
					675	-0.5	-0.1	-0.5	-0.3	-1.8	0.0
					674	-0.2	-0.4	0.9	-0.5	-1.4	0.0
			RC ENV~2	Max	667	0.1	-0.3	1.6	-0.1	0.6	0.0
					668	-0.2	-0.1	1.1	-0.1	0.5	0.0
					675	0.0	0.5	0.4	0.9	0.5	0.0
					674	0.5	0.2	1.9	1.0	0.9	0.0
				Min	667	0.0	-0.5	0.6	-0.8	-0.8	0.0
					668	-0.5	-0.2	-0.1	-1.0	-1.0	0.0
					675	-0.1	0.3	-0.3	0.0	-1.1	0.0
					674	0.1	0.1	1.3	-0.0	-0.8	0.0
646	1	1	SX (RS)		668	0.2	0.1	0.9	0.3	1.0	0.0
					669	0.5	0.3	1.1	0.2	1.1	0.0
					676	0.2	0.1	0.5	0.3	1.1	0.0
					675	0.4	0.3	0.7	0.1	0.8	0.0
			SY (RS)		668	0.5	0.4	0.3	0.3	0.2	0.0
					669	0.6	0.5	0.7	0.3	0.1	0.0
					676	0.5	0.4	0.4	0.4	0.2	0.0
					675	0.6	0.5	0.4	0.5	0.2	0.0
			RC ENV~1	Max	668	0.5	0.1	3.0	0.1	1.9	0.0
					669	0.3	0.5	0.3	0.2	1.0	0.0
					676	0.5	0.7	1.2	1.5	0.9	0.0
					675	0.8	0.6	2.4	1.4	1.8	0.0
				Min	668	-0.4	-0.7	1.0	-1.6	-1.3	0.0
					669	-0.9	-0.6	-2.0	-1.3	-2.2	0.0
					676	-0.4	-0.1	0.0	-0.3	-2.6	0.0
					675	-0.3	-0.4	0.9	-0.5	-1.3	0.0
			RC ENV~2	Max	668	0.1	-0.3	2.3	-0.3	1.1	0.0
					669	-0.2	0.0	0.0	-0.1	-0.1	0.0
					676	0.0	0.5	0.8	0.9	-0.2	0.0
					675	0.6	0.1	1.9	0.9	1.1	0.0
				Min	668	-0.0	-0.5	1.5	-1.1	-0.4	0.0
					669	-0.6	-0.1	-1.4	-0.8	-1.4	0.0
					676	-0.0	0.3	0.2	0.1	-1.7	0.0
					675	0.1	-0.0	1.1	-0.0	-0.5	0.0
647	1	1	SX (RS)		669	0.1	0.1	1.0	0.3	1.2	0.0
					670	0.4	0.3	0.8	0.2	1.1	0.0
					677	0.1	0.1	0.7	0.3	1.1	0.0
					676	0.4	0.3	0.8	0.1	1.1	0.0
			SY (RS)		669	0.5	0.4	0.2	0.2	0.2	0.0
					670	0.5	0.7	0.9	0.3	0.1	0.0
					677	0.5	0.4	0.5	0.4	0.1	0.0
					676	0.5	0.6	0.5	0.5	0.2	0.0
			RC ENV~1	Max	669	0.5	0.1	3.0	-0.0	2.8	0.0
					670	0.2	0.6	-0.4	0.2	0.2	0.0
					677	0.5	0.7	2.1	1.2	0.1	0.0
					676	0.8	0.7	2.7	1.0	2.4	0.0
				Min	669	-0.5	-0.7	0.9	-1.6	-0.8	0.0
					670	-0.8	-0.7	-2.3	-1.0	-2.9	0.0
					677	-0.5	-0.1	-0.1	-0.3	-3.3	0.0
					676	-0.3	-0.6	0.9	-0.5	-0.9	0.0
			RC ENV~2	Max	669	0.0	-0.3	2.1	-0.3	1.9	0.0
					670	-0.1	0.0	-0.6	-0.1	-0.8	0.0
					677	0.0	0.5	1.4	0.8	-0.9	0.0
					676	0.5	0.1	2.0	0.6	1.6	0.0

				Min	669	-0.0	-0.5	1.6	-1.1	0.3	0.0
					670	-0.5	-0.1	-1.7	-0.6	-2.0	0.0
					677	0.0	0.3	0.5	0.0	-2.3	0.0
					676	0.1	-0.0	0.9	-0.1	0.1	0.0
648	1	1	SX (RS)		670	0.1	0.2	1.3	0.3	1.0	0.0
					234	0.4	0.3	1.2	0.4	1.1	0.0
					237	0.1	0.2	1.0	0.4	0.7	0.0
					677	0.3	0.3	1.0	0.3	1.1	0.0
			SY (RS)		670	0.5	0.3	0.4	0.2	0.1	0.0
					234	0.3	0.7	0.8	0.2	0.2	0.0
					237	0.4	0.3	0.6	0.4	0.1	0.0
					677	0.3	0.6	0.7	0.5	0.1	0.0
			RC ENV~1	Max	670	0.5	-0.0	3.0	0.0	3.4	0.0
					234	0.1	0.6	-0.0	0.1	-0.8	0.0
					237	0.5	0.8	2.2	0.9	-1.0	0.0
					677	0.7	0.7	3.7	0.7	3.1	0.0
				Min	670	-0.5	-0.7	0.4	-1.3	0.1	0.0
					234	-0.8	-0.8	-2.5	-1.0	-3.6	0.0
					237	-0.4	-0.0	-0.9	-0.4	-3.5	0.0
					677	-0.1	-0.5	1.2	-0.5	-0.1	0.0
			RC ENV~2	Max	670	0.1	-0.2	1.7	-0.3	2.4	0.0
					234	-0.1	-0.1	-0.7	-0.3	-1.8	0.0
					237	0.0	0.6	1.4	0.6	-1.7	0.0
					677	0.5	0.1	2.8	0.4	2.1	0.0
				Min	670	0.0	-0.5	0.9	-0.9	1.0	0.0
					234	-0.6	-0.1	-1.3	-0.7	-2.7	0.0
					237	-0.0	0.2	-0.0	-0.0	-2.5	0.0
					677	0.1	0.0	1.2	-0.0	0.9	0.0
649	1	1	SX (RS)		632	0.3	0.2	1.0	0.1	0.1	0.0
					671	0.2	0.3	1.2	0.2	0.1	0.0
					678	0.3	0.2	0.4	0.1	0.3	0.0
					640	0.2	0.2	0.3	0.2	0.1	0.0
			SY (RS)		632	0.2	0.1	1.0	0.4	0.2	0.0
					671	0.2	0.3	0.5	0.4	0.2	0.0
					678	0.2	0.1	0.6	0.8	0.2	0.0
					640	0.2	0.3	0.9	0.8	0.2	0.0
			RC ENV~1	Max	632	0.4	-0.0	2.8	1.9	-0.2	0.0
					671	0.1	0.1	0.9	1.6	0.7	0.0
					678	0.1	0.6	1.3	-0.3	0.6	0.0
					640	0.3	0.6	5.6	-0.7	0.4	0.0
				Min	632	-0.1	-0.6	0.8	0.8	-0.9	0.0
					671	-0.4	-0.6	-1.4	0.2	-1.9	0.0
					678	-0.4	0.0	-3.0	-1.9	-1.0	0.0
					640	-0.1	-0.0	0.1	-2.2	-1.0	0.0
			RC ENV~2	Max	632	0.3	-0.2	1.8	1.4	-0.2	0.0
					671	-0.1	-0.2	0.0	1.3	0.5	0.0
					678	-0.1	0.4	0.7	-0.8	0.3	0.0
					640	0.2	0.4	3.7	-0.7	0.1	0.0
				Min	632	0.1	-0.4	1.0	1.1	-0.6	0.0
					671	-0.3	-0.4	-0.3	0.4	-1.1	0.0
					678	-0.2	0.2	-1.8	-1.4	-0.6	0.0
					640	0.0	0.2	0.9	-1.5	-0.8	0.0
650	1	1	SX (RS)		671	0.2	0.1	0.5	0.2	0.4	0.0
					672	0.2	0.3	0.8	0.1	0.3	0.0
					679	0.2	0.1	0.4	0.2	0.4	0.0
					678	0.2	0.3	0.1	0.2	0.2	0.0

			SY (RS)	671	0.4	0.3	1.0	0.5	0.2	0.0
				672	0.4	0.5	0.2	0.4	0.2	0.0
				679	0.4	0.3	0.4	0.8	0.2	0.0
				678	0.4	0.5	0.8	0.7	0.2	0.0
		RC ENV~1	Max	671	0.5	0.1	2.2	1.3	0.7	0.0
				672	0.3	0.3	1.6	1.1	0.8	0.0
				679	0.3	0.5	1.4	0.1	0.8	0.0
				678	0.5	0.7	4.5	0.1	1.5	0.0
			Min	671	-0.3	-0.5	-0.5	0.4	-0.9	0.0
				672	-0.5	-0.7	-0.7	-0.6	-2.1	0.0
				679	-0.5	-0.1	-1.8	-1.4	-1.3	0.0
				678	-0.3	-0.3	0.0	-1.7	-0.9	0.0
		RC ENV~2	Max	671	0.2	-0.2	1.3	0.9	0.3	0.0
				672	-0.1	-0.2	1.0	0.8	0.5	0.0
				679	-0.1	0.4	1.1	-0.2	0.4	0.0
				678	0.2	0.4	3.0	-0.1	0.8	0.0
			Min	671	0.1	-0.4	-0.1	0.4	-0.5	0.0
				672	-0.2	-0.3	0.1	-0.3	-1.2	0.0
				679	-0.2	0.2	-0.9	-0.8	-0.7	0.0
				678	0.1	0.2	0.8	-1.1	-0.7	0.0
651	1	1	SX (RS)	672	0.3	0.1	0.6	0.2	0.4	0.0
				673	0.2	0.3	0.7	0.1	0.4	0.0
				680	0.3	0.1	0.3	0.2	0.5	0.0
				679	0.2	0.3	0.2	0.1	0.3	0.0
			SY (RS)	672	0.4	0.3	0.6	0.5	0.2	0.0
				673	0.5	0.5	0.3	0.4	0.1	0.0
				680	0.4	0.3	0.4	0.6	0.2	0.0
				679	0.5	0.5	0.4	0.6	0.1	0.0
		RC ENV~1	Max	672	0.5	0.1	1.5	0.9	1.0	0.0
				673	0.3	0.4	2.3	0.8	1.1	0.0
				680	0.3	0.5	1.6	0.5	1.1	0.0
				679	0.6	0.7	3.5	0.8	1.7	0.0
			Min	672	-0.4	-0.5	-1.1	-0.4	-1.0	0.0
				673	-0.6	-0.7	-0.3	-1.2	-1.9	0.0
				680	-0.5	-0.1	-0.8	-1.0	-1.3	0.0
				679	-0.4	-0.4	0.3	-1.3	-1.0	0.0
		RC ENV~2	Max	672	0.2	-0.2	0.9	0.5	0.5	0.0
				673	-0.1	-0.1	1.6	0.4	0.7	0.0
				680	-0.0	0.3	1.2	0.3	0.7	0.0
				679	0.2	0.3	2.4	0.4	1.0	0.0
			Min	672	0.0	-0.4	-0.5	-0.2	-0.6	0.0
				673	-0.2	-0.3	0.3	-0.7	-1.0	0.0
				680	-0.1	0.2	-0.3	-0.4	-0.7	0.0
				679	0.1	0.1	0.7	-0.6	-0.7	0.0
652	1	1	SX (RS)	673	0.3	0.1	0.9	0.2	0.5	0.0
				674	0.3	0.3	0.8	0.1	0.6	0.0
				681	0.3	0.1	0.1	0.2	0.7	0.0
				680	0.2	0.3	0.3	0.1	0.4	0.0
			SY (RS)	673	0.4	0.3	0.3	0.5	0.2	0.0
				674	0.5	0.5	0.4	0.5	0.2	0.0
				681	0.4	0.3	0.5	0.6	0.2	0.0
				680	0.5	0.5	0.3	0.6	0.1	0.0
		RC ENV~1	Max	673	0.4	0.1	1.9	0.6	1.2	0.0
				674	0.3	0.4	2.1	0.6	1.3	0.0
				681	0.4	0.5	1.4	1.0	1.3	0.0
				680	0.6	0.6	3.0	1.3	1.6	0.0

				Min	673	-0.4	-0.5	-0.6	-0.9	-1.2	0.0
					674	-0.6	-0.6	-0.5	-1.5	-1.9	0.0
					681	-0.4	-0.1	-0.4	-0.7	-1.5	0.0
					680	-0.3	-0.4	0.7	-0.9	-1.2	0.0
			RC ENV~2	Max	673	0.1	-0.2	1.1	0.2	0.6	0.0
					674	-0.1	-0.1	1.4	0.1	0.7	0.0
					681	0.1	0.4	0.9	0.6	0.7	0.0
					680	0.2	0.2	2.1	0.7	0.9	0.0
				Min	673	-0.0	-0.4	-0.2	-0.6	-0.8	0.0
					674	-0.3	-0.2	0.2	-0.9	-1.1	0.0
					681	-0.0	0.2	-0.1	-0.2	-0.9	0.0
					680	0.1	0.1	1.0	-0.3	-0.8	0.0
653	1	1	SX (RS)		674	0.3	0.2	0.9	0.2	0.7	0.0
					675	0.3	0.3	0.8	0.1	0.8	0.0
					682	0.3	0.2	0.1	0.2	0.9	0.0
					681	0.3	0.3	0.5	0.0	0.6	0.0
			SY (RS)		674	0.4	0.3	0.3	0.4	0.2	0.0
					675	0.5	0.4	0.5	0.5	0.2	0.0
					682	0.4	0.4	0.5	0.5	0.2	0.0
					681	0.5	0.5	0.3	0.6	0.2	0.0
			RC ENV~1	Max	674	0.4	0.1	2.2	0.4	1.5	0.0
					675	0.3	0.4	1.4	0.5	1.2	0.0
					682	0.4	0.6	1.0	1.1	1.3	0.0
					681	0.7	0.5	2.8	1.4	1.8	0.0
				Min	674	-0.4	-0.6	0.2	-1.2	-1.4	0.0
					675	-0.7	-0.5	-0.9	-1.5	-2.1	0.0
					682	-0.3	-0.1	-0.1	-0.6	-2.0	0.0
					681	-0.3	-0.4	0.9	-0.7	-1.4	0.0
			RC ENV~2	Max	674	0.0	-0.2	1.4	0.0	0.8	0.0
					675	-0.1	-0.0	0.9	0.0	0.5	0.0
					682	0.1	0.4	0.5	0.7	0.4	0.0
					681	0.3	0.1	2.0	0.9	1.0	0.0
				Min	674	-0.1	-0.4	0.3	-0.8	-0.8	0.0
					675	-0.4	-0.1	-0.2	-0.9	-1.3	0.0
					682	0.0	0.2	-0.0	-0.1	-1.2	0.0
					681	0.1	0.0	1.4	-0.2	-0.8	0.0
654	1	1	SX (RS)		675	0.3	0.2	0.9	0.2	0.9	0.0
					676	0.3	0.3	0.8	0.1	1.0	0.0
					683	0.3	0.2	0.4	0.2	1.1	0.0
					682	0.3	0.3	0.6	0.1	0.8	0.0
			SY (RS)		675	0.4	0.4	0.3	0.4	0.2	0.0
					676	0.5	0.5	0.6	0.5	0.1	0.0
					683	0.4	0.4	0.5	0.6	0.1	0.0
					682	0.5	0.5	0.3	0.6	0.2	0.0
			RC ENV~1	Max	675	0.4	0.1	2.5	0.3	2.1	0.0
					676	0.3	0.4	0.8	0.5	0.8	0.0
					683	0.5	0.7	0.7	1.1	0.9	0.0
					682	0.7	0.5	2.9	1.3	2.2	0.0
				Min	675	-0.5	-0.7	0.7	-1.3	-1.3	0.0
					676	-0.7	-0.5	-1.2	-1.3	-2.5	0.0
					683	-0.3	-0.1	-0.3	-0.6	-2.6	0.0
					682	-0.3	-0.4	1.1	-0.7	-1.2	0.0
			RC ENV~2	Max	675	-0.0	-0.2	1.7	-0.0	1.3	0.0
					676	-0.2	-0.0	0.5	0.0	-0.1	0.0
					683	0.1	0.5	0.4	0.7	-0.1	0.0
					682	0.3	0.1	2.2	0.8	1.3	0.0

				Min	675	-0.1	-0.5	0.8	-0.8	-0.4	0.0
					676	-0.4	-0.1	-0.5	-0.8	-1.6	0.0
					683	0.0	0.3	-0.0	-0.1	-1.7	0.0
					682	0.1	0.0	1.5	-0.1	-0.4	0.0
655	1	1	SX (RS)		676	0.2	0.1	1.0	0.3	1.1	0.0
					677	0.3	0.3	0.9	0.2	1.0	0.0
					684	0.2	0.1	0.8	0.3	1.0	0.0
					683	0.2	0.3	0.9	0.1	1.0	0.0
			SY (RS)		676	0.4	0.5	0.3	0.4	0.1	0.0
					677	0.5	0.4	0.7	0.5	0.1	0.0
					684	0.4	0.5	0.5	0.6	0.1	0.0
					683	0.5	0.4	0.3	0.7	0.1	0.0
			RC ENV~1	Max	676	0.4	0.1	2.6	0.3	2.7	0.0
					677	0.3	0.4	0.7	0.4	0.1	0.0
					684	0.5	0.8	1.1	0.9	0.2	0.0
					683	0.7	0.5	2.9	1.1	2.7	0.0
				Min	676	-0.5	-0.8	0.7	-1.2	-0.8	0.0
					677	-0.7	-0.5	-1.3	-1.0	-2.9	0.0
					684	-0.3	-0.2	-0.9	-0.7	-3.0	0.0
					683	-0.3	-0.4	1.0	-0.7	-0.7	0.0
			RC ENV~2	Max	676	-0.0	-0.3	1.7	-0.0	1.8	0.0
					677	-0.2	-0.1	0.4	0.0	-0.8	0.0
					684	0.1	0.5	0.7	0.6	-0.7	0.0
					683	0.4	0.1	2.2	0.7	1.7	0.0
				Min	676	-0.1	-0.5	0.9	-0.7	0.2	0.0
					677	-0.4	-0.1	-0.5	-0.6	-2.0	0.0
					684	0.0	0.3	-0.1	-0.1	-2.0	0.0
					683	0.1	0.0	1.2	-0.1	0.2	0.0
656	1	1	SX (RS)		677	0.2	0.0	1.2	0.4	1.0	0.0
					237	0.2	0.3	1.2	0.3	0.7	0.0
					240	0.2	0.1	1.3	0.4	0.7	0.0
					684	0.2	0.3	1.2	0.2	0.9	0.0
			SY (RS)		677	0.3	0.4	0.4	0.4	0.1	0.0
					237	0.3	0.3	0.6	0.4	0.0	0.0
					240	0.3	0.5	0.5	0.7	0.1	0.0
					684	0.4	0.3	0.5	0.7	0.1	0.0
			RC ENV~1	Max	677	0.3	0.1	3.0	0.4	3.1	0.0
					237	0.1	0.2	0.9	0.3	-1.0	0.0
					240	0.3	0.8	1.5	0.7	-0.9	0.0
					684	0.5	0.5	3.5	0.8	3.1	0.0
				Min	677	-0.4	-0.8	0.5	-0.9	-0.1	0.0
					237	-0.5	-0.5	-1.6	-0.7	-3.1	0.0
					240	-0.2	-0.1	-1.8	-0.7	-3.2	0.0
					684	-0.2	-0.2	0.9	-0.7	-0.0	0.0
			RC ENV~2	Max	677	-0.0	-0.3	1.8	0.0	2.1	0.0
					237	-0.1	-0.1	0.5	-0.1	-1.6	0.0
					240	0.1	0.5	0.9	0.5	-1.5	0.0
					684	0.3	0.2	2.5	0.5	2.1	0.0
				Min	677	-0.1	-0.5	0.8	-0.6	0.8	0.0
					237	-0.3	-0.2	-0.5	-0.5	-2.3	0.0
					240	0.0	0.3	-0.6	-0.1	-2.3	0.0
					684	0.1	0.1	1.0	-0.0	0.8	0.0
657	1	1	SX (RS)		640	0.3	0.2	0.7	0.1	0.1	0.0
					678	0.3	0.3	0.8	0.1	0.1	0.0
					685	0.3	0.2	0.4	0.2	0.2	0.0
					648	0.3	0.3	0.4	0.1	0.2	0.0

			SY (RS)	640	0.2	0.3	0.8	0.8	0.2	0.0
				678	0.3	0.6	0.7	0.7	0.2	0.0
				685	0.3	0.3	0.5	1.2	0.2	0.0
				648	0.3	0.6	0.9	1.1	0.2	0.0
		RC ENV~1	Max	640	0.4	0.1	4.2	1.9	0.1	0.0
				678	0.2	0.3	0.7	2.2	0.8	0.0
				685	0.2	0.6	1.5	0.6	0.3	0.0
				648	0.4	0.9	2.8	-0.1	0.4	0.0
			Min	640	-0.2	-0.6	2.4	0.4	-0.6	0.0
				678	-0.4	-0.8	-0.9	0.6	-1.5	0.0
				685	-0.4	-0.1	-2.3	-1.7	-1.3	0.0
				648	-0.2	-0.4	-1.9	-2.3	-1.0	0.0
		RC ENV~2	Max	640	0.2	-0.2	3.2	1.4	-0.0	0.0
				678	0.0	-0.2	0.1	1.5	0.7	0.0
				685	-0.1	0.4	1.0	-0.3	0.1	0.0
				648	0.2	0.5	1.6	-0.6	0.1	0.0
			Min	640	0.1	-0.4	2.8	0.9	-0.4	0.0
				678	-0.2	-0.4	-0.3	0.7	-0.8	0.0
				685	-0.2	0.2	-1.3	-0.9	-0.8	0.0
				648	-0.0	0.2	-1.0	-1.3	-0.8	0.0
658	1	1	SX (RS)	678	0.3	0.2	0.5	0.2	0.2	0.0
				679	0.3	0.3	0.7	0.1	0.2	0.0
				686	0.3	0.2	0.3	0.1	0.3	0.0
				685	0.2	0.3	0.2	0.1	0.1	0.0
			SY (RS)	678	0.4	0.1	0.5	0.8	0.2	0.0
				679	0.5	0.6	0.5	0.7	0.2	0.0
				686	0.4	0.2	0.2	1.0	0.3	0.0
				685	0.5	0.7	0.8	1.0	0.2	0.0
		RC ENV~1	Max	678	0.5	0.0	3.1	1.5	1.0	0.0
				679	0.4	0.4	0.5	1.7	1.0	0.0
				686	0.3	0.4	2.3	0.7	0.6	0.0
				685	0.6	0.9	1.9	0.0	1.2	0.0
			Min	678	-0.3	-0.5	1.9	-0.1	-0.5	0.0
				679	-0.6	-0.8	-1.0	-0.2	-1.7	0.0
				686	-0.5	-0.0	-0.2	-1.3	-1.5	0.0
				685	-0.5	-0.5	-1.8	-2.0	-1.0	0.0
		RC ENV~2	Max	678	0.2	-0.2	2.6	0.8	0.6	0.0
				679	0.0	-0.2	0.3	1.0	0.8	0.0
				686	-0.0	0.3	2.0	0.1	0.3	0.0
				685	0.1	0.4	1.0	-0.2	0.6	0.0
			Min	678	0.0	-0.3	1.6	0.3	-0.3	0.0
				679	-0.1	-0.4	-0.3	0.1	-0.9	0.0
				686	-0.2	0.1	0.2	-0.4	-0.9	0.0
				685	-0.0	0.2	-1.1	-1.1	-0.8	0.0
659	1	1	SX (RS)	679	0.3	0.2	0.4	0.2	0.3	0.0
				680	0.2	0.3	0.6	0.1	0.4	0.0
				687	0.3	0.2	0.3	0.1	0.4	0.0
				686	0.2	0.3	0.4	0.1	0.2	0.0
			SY (RS)	679	0.3	0.3	0.3	0.7	0.2	0.0
				680	0.6	0.5	0.5	0.7	0.1	0.0
				687	0.3	0.3	0.4	0.7	0.3	0.0
				686	0.6	0.6	0.3	0.9	0.1	0.0
		RC ENV~1	Max	679	0.4	0.1	2.1	1.0	1.2	0.0
				680	0.5	0.4	1.0	1.2	1.3	0.0
				687	0.3	0.5	2.4	0.6	1.0	0.0

					686	0.7	0.7	2.0	0.5	1.4	0.0
				Min	679	-0.3	-0.4	0.5	-0.5	-0.8	0.0
					680	-0.6	-0.7	-0.9	-0.9	-1.6	0.0
					687	-0.4	-0.2	0.6	-0.9	-1.5	0.0
					686	-0.6	-0.4	-0.7	-1.6	-1.2	0.0
			RC ENV~2	Max	679	0.1	-0.1	1.7	0.4	0.7	0.0
					680	0.0	-0.1	0.6	0.6	1.0	0.0
					687	0.0	0.3	2.0	0.3	0.7	0.0
					686	0.1	0.3	1.2	0.2	0.7	0.0
				Min	679	-0.0	-0.3	0.6	-0.3	-0.5	0.0
					680	-0.1	-0.2	-0.3	-0.4	-0.9	0.0
					687	-0.1	0.1	0.7	-0.3	-0.8	0.0
					686	-0.0	0.1	-0.3	-0.8	-1.0	0.0
660	1	1	SX (RS)		680	0.4	0.2	0.6	0.2	0.4	0.0
					681	0.2	0.3	0.6	0.1	0.6	0.0
					688	0.4	0.2	0.3	0.2	0.6	0.0
					687	0.2	0.3	0.4	0.1	0.4	0.0
			SY (RS)		680	0.3	0.3	0.4	0.6	0.2	0.0
					681	0.5	0.4	0.5	0.6	0.2	0.0
					688	0.2	0.3	0.6	0.6	0.2	0.0
					687	0.6	0.5	0.4	0.8	0.1	0.0
			RC ENV~1	Max	680	0.3	0.1	1.9	0.7	1.3	0.0
					681	0.4	0.4	1.1	0.9	1.4	0.0
					688	0.4	0.5	1.9	0.8	1.3	0.0
					687	0.6	0.5	2.6	0.9	1.5	0.0
				Min	680	-0.4	-0.5	-0.1	-0.9	-1.1	0.0
					681	-0.6	-0.5	-0.8	-1.3	-1.8	0.0
					688	-0.3	-0.1	0.5	-0.8	-1.6	0.0
					687	-0.5	-0.4	0.3	-1.2	-1.4	0.0
			RC ENV~2	Max	680	0.0	-0.1	1.4	0.2	0.7	0.0
					681	-0.0	-0.0	0.7	0.3	0.9	0.0
					688	0.1	0.3	1.4	0.5	0.8	0.0
					687	0.1	0.1	1.8	0.5	0.8	0.0
				Min	680	-0.1	-0.3	0.1	-0.6	-0.8	0.0
					681	-0.2	-0.1	-0.2	-0.7	-1.0	0.0
					688	-0.0	0.1	0.6	-0.2	-0.9	0.0
					687	0.0	0.0	0.7	-0.5	-1.1	0.0
661	1	1	SX (RS)		681	0.4	0.2	0.8	0.2	0.7	0.0
					682	0.2	0.3	0.6	0.1	0.8	0.0
					689	0.4	0.2	0.2	0.2	0.9	0.0
					688	0.2	0.3	0.4	0.1	0.6	0.0
			SY (RS)		681	0.3	0.3	0.4	0.6	0.2	0.0
					682	0.5	0.4	0.5	0.6	0.2	0.0
					689	0.3	0.3	0.5	0.6	0.2	0.0
					688	0.5	0.4	0.5	0.7	0.2	0.0
			RC ENV~1	Max	681	0.3	0.1	2.0	0.6	1.6	0.0
					682	0.4	0.4	1.1	0.7	1.3	0.0
					689	0.5	0.5	1.1	0.8	1.3	0.0
					688	0.6	0.5	3.1	1.1	1.8	0.0
				Min	681	-0.5	-0.5	-0.1	-1.1	-1.4	0.0
					682	-0.6	-0.4	-0.8	-1.4	-2.2	0.0
					689	-0.3	-0.1	-0.0	-0.7	-2.0	0.0
					688	-0.4	-0.4	1.1	-0.9	-1.5	0.0
			RC ENV~2	Max	681	0.0	-0.2	1.3	0.1	0.9	0.0
					682	-0.1	0.0	0.7	0.1	0.5	0.0
					689	0.2	0.3	0.5	0.5	0.5	0.0

					688	0.2	0.1	2.2	0.7	1.0	0.0
				Min	681	-0.2	-0.3	0.2	-0.7	-0.8	0.0
					682	-0.2	-0.1	-0.2	-0.9	-1.3	0.0
					689	0.0	0.2	0.1	-0.2	-1.2	0.0
					688	0.0	-0.0	1.5	-0.3	-0.9	0.0
662	1	1	SX (RS)		682	0.5	0.3	0.9	0.2	0.9	0.0
					683	0.2	0.3	0.6	0.1	1.0	0.0
					690	0.5	0.3	0.4	0.2	1.1	0.0
					689	0.1	0.3	0.6	0.1	0.9	0.0
			SY (RS)		682	0.4	0.4	0.4	0.6	0.2	0.0
					683	0.5	0.4	0.5	0.6	0.2	0.0
					690	0.4	0.5	0.5	0.7	0.2	0.0
					689	0.5	0.4	0.4	0.7	0.2	0.0
			RC ENV~1	Max	682	0.3	0.2	2.3	0.6	2.0	0.0
					683	0.4	0.4	1.2	0.6	0.8	0.0
					690	0.7	0.8	0.2	0.8	1.0	0.0
					689	0.7	0.4	3.4	1.2	2.3	0.0
				Min	682	-0.6	-0.7	0.2	-1.0	-1.3	0.0
					683	-0.7	-0.4	-0.7	-1.3	-2.7	0.0
					690	-0.4	-0.2	-0.8	-0.8	-2.5	0.0
					689	-0.4	-0.4	1.5	-0.8	-1.3	0.0
			RC ENV~2	Max	682	-0.0	-0.2	1.5	0.1	1.2	0.0
					683	-0.1	0.0	0.8	0.0	-0.1	0.0
					690	0.4	0.5	-0.2	0.5	0.0	0.0
					689	0.2	0.0	2.6	0.7	1.4	0.0
				Min	682	-0.3	-0.5	0.3	-0.6	-0.5	0.0
					683	-0.2	-0.1	-0.1	-0.8	-1.8	0.0
					690	0.0	0.2	-0.6	-0.2	-1.6	0.0
					689	0.1	-0.0	2.0	-0.1	-0.5	0.0
663	1	1	SX (RS)		683	0.4	0.2	1.0	0.2	1.1	0.0
					684	0.2	0.3	0.9	0.2	0.9	0.0
					691	0.4	0.2	1.0	0.2	1.1	0.0
					690	0.1	0.3	1.1	0.1	1.0	0.0
			SY (RS)		683	0.4	0.6	0.5	0.6	0.1	0.0
					684	0.5	0.3	0.5	0.6	0.2	0.0
					691	0.4	0.7	0.5	0.8	0.2	0.0
					690	0.6	0.3	0.3	0.8	0.1	0.0
			RC ENV~1	Max	683	0.3	0.2	2.6	0.7	2.6	0.0
					684	0.4	0.2	1.7	0.6	0.0	0.0
					691	0.6	1.0	0.2	0.8	0.3	0.0
					690	0.7	0.4	3.5	1.2	2.9	0.0
				Min	683	-0.5	-0.9	0.4	-0.9	-1.0	0.0
					684	-0.7	-0.4	-0.7	-1.0	-3.1	0.0
					691	-0.3	-0.3	-1.7	-0.8	-3.0	0.0
					690	-0.4	-0.3	1.1	-0.7	-0.8	0.0
			RC ENV~2	Max	683	-0.0	-0.3	1.7	0.1	1.7	0.0
					684	-0.1	-0.0	1.1	0.0	-0.8	0.0
					691	0.3	0.6	-0.2	0.5	-0.7	0.0
					690	0.3	0.1	2.6	0.8	1.9	0.0
				Min	683	-0.3	-0.6	0.5	-0.5	0.0	0.0
					684	-0.3	-0.2	0.1	-0.7	-2.1	0.0
					691	0.0	0.3	-1.2	-0.1	-2.0	0.0
					690	0.1	0.0	1.7	0.0	0.2	0.0
664	1	1	SX (RS)		684	0.4	0.2	1.0	0.4	1.1	0.0
					240	0.1	0.4	1.3	0.2	0.6	0.0
					243	0.5	0.1	1.6	0.4	1.0	0.0

					691	0.1	0.3	1.3	0.2	0.8	0.0
				SY (RS)	684	0.2	0.6	0.6	0.6	0.1	0.0
					240	0.4	0.2	0.5	0.6	0.1	0.0
					243	0.2	0.7	0.5	0.9	0.2	0.0
					691	0.5	0.1	0.5	0.9	0.2	0.0
			RC ENV~1	Max	684	0.3	0.3	3.2	0.7	3.1	0.0
					240	0.3	0.2	2.1	0.6	-1.1	0.0
					243	0.5	1.1	0.5	1.0	-0.6	0.0
					691	0.6	0.5	3.4	1.1	3.2	0.0
				Min	684	-0.5	-1.0	0.9	-0.7	-0.3	0.0
					240	-0.6	-0.6	-1.3	-0.7	-3.3	0.0
					243	-0.4	-0.3	-2.7	-0.7	-3.3	0.0
					691	-0.3	-0.2	0.8	-0.7	0.1	0.0
			RC ENV~2	Max	684	0.0	-0.3	2.2	0.2	2.1	0.0
					240	-0.1	-0.1	1.3	-0.0	-1.6	0.0
					243	0.3	0.6	0.1	0.5	-1.5	0.0
					691	0.2	0.3	2.3	0.7	2.2	0.0
				Min	684	-0.2	-0.6	0.9	-0.4	0.7	0.0
					240	-0.2	-0.4	-0.1	-0.5	-2.4	0.0
					243	-0.1	0.4	-1.4	-0.0	-2.4	0.0
					691	0.1	0.1	1.0	0.1	0.9	0.0
665	1	1		SX (RS)	648	0.4	0.3	0.6	0.2	0.2	0.0
					685	0.3	0.4	0.5	0.1	0.3	0.0
					692	0.5	0.3	2.4	0.1	0.3	0.0
					656	0.2	0.3	1.8	0.1	0.5	0.0
				SY (RS)	648	0.5	0.7	0.8	1.1	0.4	0.0
					685	0.4	1.1	1.8	1.1	0.3	0.0
					692	0.5	0.5	0.6	1.7	0.5	0.0
					656	0.4	1.3	3.2	1.9	0.5	0.0
			RC ENV~1	Max	648	0.6	0.4	5.9	1.8	1.0	0.0
					685	0.4	0.8	2.6	2.4	1.0	0.0
					692	0.4	0.7	3.7	2.1	0.2	0.0
					656	0.4	1.6	-0.2	1.5	1.1	0.0
				Min	648	-0.3	-1.0	3.6	-0.4	-0.2	0.0
					685	-0.4	-1.4	-0.9	0.2	-1.4	0.0
					692	-0.7	-0.3	-2.0	-1.3	-2.0	0.0
					656	-0.4	-1.0	-6.5	-2.4	-0.7	0.0
			RC ENV~2	Max	648	0.2	-0.2	4.6	1.0	0.7	0.0
					685	0.1	-0.3	1.0	1.4	0.7	0.0
					692	-0.1	0.4	1.4	0.5	-0.3	0.0
					656	0.1	0.6	-0.7	0.0	0.7	0.0
				Min	648	0.1	-0.5	4.1	0.5	0.2	0.0
					685	-0.1	-0.6	0.6	0.6	-0.8	0.0
					692	-0.2	0.2	-1.1	0.3	-1.3	0.0
					656	-0.1	0.3	-3.6	-0.5	-0.3	0.0
666	1	1		SX (RS)	685	0.4	0.3	0.3	0.2	0.2	0.0
					686	0.4	0.4	0.9	0.1	0.1	0.0
					693	0.3	0.3	0.2	0.1	0.2	0.0
					692	0.5	0.5	1.1	0.2	0.4	0.0
				SY (RS)	685	0.4	0.1	0.7	1.1	0.3	0.0
					686	0.8	0.8	1.0	1.1	0.2	0.0
					693	0.3	0.2	0.2	0.9	0.5	0.0
					692	0.9	1.0	0.5	1.4	0.3	0.0
			RC ENV~1	Max	685	0.5	0.1	4.1	1.3	1.5	0.0
					686	0.8	0.6	1.1	2.1	1.4	0.0

					693	0.3	0.4	3.1	1.2	0.9	0.0
					692	0.8	1.2	-0.8	0.9	1.2	0.0
				Min	685	-0.3	-0.4	2.7	-0.8	-0.2	0.0
					686	-0.7	-1.0	-0.9	-0.2	-1.2	0.0
					693	-0.4	-0.2	1.3	-0.6	-1.4	0.0
					692	-1.0	-0.7	-4.4	-1.9	-1.2	0.0
			RC ENV~2	Max	685	0.2	-0.1	3.5	0.4	1.0	0.0
					686	0.2	-0.1	0.6	1.0	1.2	0.0
					693	0.0	0.2	3.0	0.6	0.4	0.0
					692	0.0	0.5	-1.1	0.2	0.6	0.0
				Min	685	0.0	-0.3	2.8	-0.1	0.0	0.0
					686	-0.0	-0.4	-0.1	0.1	-0.5	0.0
					693	-0.1	0.0	1.3	0.3	-0.8	0.0
					692	-0.3	0.2	-3.5	-0.6	-0.8	0.0
667	1	1	SX (RS)		686	0.3	0.3	0.3	0.1	0.2	0.0
					687	0.3	0.3	0.7	0.1	0.3	0.0
					694	0.3	0.3	0.4	0.1	0.4	0.0
					693	0.3	0.3	0.7	0.1	0.1	0.0
			SY (RS)		686	0.2	0.3	0.9	0.8	0.4	0.0
					687	0.6	0.5	0.6	0.9	0.2	0.0
					694	0.2	0.3	0.8	0.6	0.4	0.0
					693	0.7	0.5	1.1	0.9	0.2	0.0
			RC ENV~1	Max	686	0.3	0.2	3.1	0.8	1.3	0.0
					687	0.6	0.4	0.7	1.5	1.6	0.0
					694	0.3	0.4	3.2	0.6	1.2	0.0
					693	0.7	0.6	1.0	0.5	1.1	0.0
				Min	686	-0.3	-0.4	1.2	-0.7	-0.9	0.0
					687	-0.7	-0.6	-0.9	-0.6	-1.3	0.0
					694	-0.3	-0.2	1.4	-0.5	-1.3	0.0
					693	-0.7	-0.4	-2.3	-1.4	-1.4	0.0
			RC ENV~2	Max	686	0.0	-0.0	2.2	0.1	0.7	0.0
					687	0.1	-0.1	0.4	0.6	1.3	0.0
					694	0.1	0.2	2.5	0.4	0.8	0.0
					693	0.0	0.2	0.4	0.2	0.5	0.0
				Min	686	-0.1	-0.2	1.2	-0.4	-0.5	0.0
					687	-0.0	-0.2	-0.3	-0.3	-0.6	0.0
					694	-0.0	0.0	1.3	0.0	-0.7	0.0
					693	-0.1	0.1	-1.3	-0.6	-1.2	0.0
668	1	1	SX (RS)		687	0.4	0.2	0.5	0.1	0.4	0.0
					688	0.1	0.3	0.6	0.1	0.6	0.0
					695	0.4	0.2	0.4	0.1	0.6	0.0
					694	0.1	0.3	0.5	0.1	0.4	0.0
			SY (RS)		687	0.1	0.2	0.7	0.6	0.3	0.0
					688	0.6	0.4	0.6	0.7	0.2	0.0
					695	0.1	0.3	0.8	0.5	0.3	0.0
					694	0.6	0.4	0.9	0.8	0.2	0.0
			RC ENV~1	Max	687	0.4	0.1	2.3	0.7	1.3	0.0
					688	0.5	0.3	0.7	1.1	1.7	0.0
					695	0.5	0.4	2.3	0.6	1.5	0.0
					694	0.6	0.5	2.2	0.6	1.2	0.0
				Min	687	-0.4	-0.4	0.4	-0.8	-1.2	0.0
					688	-0.6	-0.4	-0.9	-1.0	-1.6	0.0
					695	-0.4	-0.2	0.8	-0.6	-1.5	0.0
					694	-0.6	-0.4	-0.5	-1.2	-1.6	0.0
			RC ENV~2	Max	687	0.0	-0.1	1.7	0.1	0.7	0.0
					688	0.0	-0.0	0.4	0.3	1.1	0.0

					695	0.2	0.2	1.5	0.4	0.9	0.0
					694	0.0	0.1	1.4	0.3	0.6	0.0
				Min	687	-0.2	-0.2	0.5	-0.5	-0.9	0.0
					688	-0.0	-0.1	-0.4	-0.6	-0.8	0.0
					695	0.0	0.1	0.8	-0.1	-0.8	0.0
					694	-0.1	0.0	0.3	-0.5	-1.3	0.0
669	1	1	SX (RS)		688	0.5	0.2	0.7	0.2	0.6	0.0
					689	0.1	0.3	0.5	0.1	0.8	0.0
					696	0.6	0.2	0.4	0.2	0.9	0.0
					695	0.1	0.3	0.4	0.1	0.6	0.0
			SY (RS)		688	0.2	0.3	0.6	0.6	0.3	0.0
					689	0.5	0.4	0.6	0.7	0.2	0.0
					696	0.1	0.3	0.7	0.6	0.3	0.0
					695	0.6	0.4	0.7	0.7	0.2	0.0
			RC ENV~1	Max	688	0.4	0.1	2.2	0.7	1.4	0.0
					689	0.5	0.3	1.0	0.8	1.4	0.0
					696	0.7	0.5	1.0	0.7	1.5	0.0
					695	0.6	0.4	3.1	0.9	1.6	0.0
				Min	688	-0.6	-0.4	0.2	-0.9	-1.5	0.0
					689	-0.6	-0.4	-0.8	-1.2	-2.2	0.0
					696	-0.4	-0.2	-0.4	-0.6	-1.8	0.0
					695	-0.5	-0.4	0.8	-0.9	-1.7	0.0
			RC ENV~2	Max	688	0.0	-0.1	1.6	0.1	0.8	0.0
					689	0.0	0.0	0.6	0.1	0.6	0.0
					696	0.3	0.3	0.3	0.4	0.7	0.0
					695	0.1	0.1	2.3	0.5	0.8	0.0
				Min	688	-0.3	-0.3	0.4	-0.5	-1.0	0.0
					689	-0.1	-0.1	-0.2	-0.7	-1.3	0.0
					696	-0.0	0.1	-0.2	-0.1	-1.1	0.0
					695	-0.1	-0.0	1.5	-0.2	-1.2	0.0
670	1	1	SX (RS)		689	0.7	0.2	0.9	0.2	0.9	0.0
					690	0.1	0.4	0.5	0.1	1.1	0.0
					697	0.8	0.2	0.5	0.2	1.2	0.0
					696	0.2	0.4	0.5	0.1	0.9	0.0
			SY (RS)		689	0.3	0.4	0.6	0.7	0.2	0.0
					690	0.5	0.4	0.7	0.7	0.2	0.0
					697	0.3	0.4	0.7	0.7	0.2	0.0
					696	0.5	0.4	0.6	0.6	0.2	0.0
			RC ENV~1	Max	689	0.5	0.2	2.7	0.8	1.9	0.0
					690	0.4	0.4	1.6	0.6	0.9	0.0
					697	0.9	0.6	-0.3	0.9	1.1	0.0
					696	0.6	0.4	3.6	1.2	2.2	0.0
				Min	689	-0.8	-0.6	0.5	-0.8	-1.5	0.0
					690	-0.6	-0.4	-0.5	-1.2	-2.9	0.0
					697	-0.6	-0.2	-2.2	-0.6	-2.5	0.0
					696	-0.5	-0.4	1.6	-0.5	-1.4	0.0
			RC ENV~2	Max	689	0.0	-0.1	1.9	0.1	1.1	0.0
					690	0.0	0.1	1.1	-0.0	-0.1	0.0
					697	0.5	0.3	-0.8	0.6	0.1	0.0
					696	0.1	0.1	2.7	0.8	1.3	0.0
				Min	689	-0.5	-0.3	0.6	-0.5	-0.7	0.0
					690	-0.1	-0.1	0.2	-0.8	-1.9	0.0
					697	-0.0	0.1	-1.6	0.0	-1.6	0.0
					696	-0.1	-0.1	2.2	0.1	-0.6	0.0
671	1	1	SX (RS)		690	0.9	0.4	1.2	0.2	1.2	0.0
					691	0.1	0.4	0.5	0.2	1.1	0.0

					698	1.1	0.5	0.6	0.5	1.5	0.0
					697	0.1	0.5	0.9	0.2	1.1	0.0
				SY (RS)	690	0.5	0.7	0.7	0.8	0.1	0.0
					691	0.6	0.2	0.6	0.8	0.2	0.0
					698	0.5	0.8	0.4	1.0	0.3	0.0
					697	0.6	0.3	0.3	0.7	0.2	0.0
			RC ENV~1	Max	690	0.6	0.3	3.5	0.9	2.5	0.0
					691	0.5	0.4	2.5	0.7	0.0	0.0
					698	1.4	1.3	-1.3	1.3	0.6	0.0
					697	0.7	0.5	3.6	1.5	2.9	0.0
				Min	690	-1.1	-1.1	0.9	-0.7	-1.2	0.0
					691	-0.8	-0.5	0.1	-1.2	-3.5	0.0
					698	-0.8	-0.4	-3.6	-0.7	-3.2	0.0
					697	-0.5	-0.5	1.2	-0.3	-0.9	0.0
			RC ENV~2	Max	690	0.0	-0.2	2.3	0.2	1.6	0.0
					691	-0.1	0.1	1.7	-0.1	-0.9	0.0
					698	0.8	0.8	-1.5	0.8	-0.7	0.0
					697	0.2	0.1	2.7	1.0	1.9	0.0
				Min	690	-0.6	-0.6	1.0	-0.4	-0.1	0.0
					691	-0.2	-0.2	0.7	-0.8	-2.4	0.0
					698	-0.0	0.3	-2.7	0.2	-2.2	0.0
					697	-0.0	-0.2	1.9	0.4	0.1	0.0
672	1	1		SX (RS)	691	0.6	0.3	0.6	0.2	1.4	0.0
					243	0.2	0.5	0.8	0.3	0.4	0.0
					246	0.5	0.2	4.2	0.2	0.2	0.0
					698	0.3	0.4	4.4	0.2	1.1	0.0
				SY (RS)	691	0.2	1.0	1.2	0.9	0.1	0.0
					243	0.6	0.4	0.4	0.8	0.3	0.0
					246	0.2	1.2	1.5	1.3	0.5	0.0
					698	0.7	0.2	0.1	1.1	0.1	0.0
			RC ENV~1	Max	691	0.5	0.5	4.1	0.8	3.3	0.0
					243	0.4	0.2	2.9	0.6	-1.4	0.0
					246	0.6	1.7	2.4	1.9	-1.3	0.0
					698	0.9	0.6	5.9	1.7	3.8	0.0
				Min	691	-0.7	-1.5	1.7	-0.9	-0.5	0.0
					243	-0.8	-0.8	-0.2	-1.0	-3.6	0.0
					246	-0.4	-0.6	-6.0	-0.7	-3.6	0.0
					698	-0.5	-0.2	-2.9	-0.5	-0.0	0.0
			RC ENV~2	Max	691	0.1	-0.4	2.9	0.1	2.2	0.0
					243	-0.1	-0.1	2.0	-0.1	-1.8	0.0
					246	0.3	0.8	-0.3	0.9	-1.8	0.0
					698	0.4	0.4	2.9	1.1	2.6	0.0
				Min	691	-0.4	-0.8	1.9	-0.4	0.8	0.0
					243	-0.3	-0.5	0.5	-0.6	-2.6	0.0
					246	-0.1	0.5	-3.3	0.5	-2.6	0.0
					698	0.1	0.1	-0.2	0.6	1.0	0.0
673	1	1		SX (RS)	656	0.3	0.6	1.3	0.2	0.5	0.0
					692	1.1	0.6	3.4	0.3	0.6	0.0
					73	0.4	0.7	1.7	0.3	0.4	0.0
					15	1.7	0.7	3.8	0.9	3.5	0.0
				SY (RS)	656	0.9	1.4	3.0	1.9	0.3	0.0
					692	1.2	2.0	5.2	2.1	0.4	0.0
					73	0.8	0.2	3.1	1.1	1.0	0.0
					15	1.4	3.2	5.2	7.3	0.8	0.0
			RC ENV~1	Max	656	1.1	1.0	8.7	1.9	3.4	0.0

					692	1.4	1.6	9.3	2.7	1.5	0.0
					73	0.7	0.8	7.9	3.4	1.1	0.0
					15	1.5	3.9	-6.4	9.0	5.0	0.0
				Min	656	-0.7	-1.7	2.7	-2.0	1.2	0.0
					692	-1.0	-2.5	-1.1	-1.4	-1.0	0.0
					73	-1.0	-0.6	1.8	1.1	-1.4	0.0
					15	-1.9	-2.5	-16.7	-5.7	-1.9	-0.0
			RC ENV~2	Max	656	0.3	-0.2	6.4	0.2	2.5	0.0
					692	0.6	-0.3	5.1	0.7	1.0	0.0
					73	0.0	0.3	5.2	2.5	0.2	0.0
					15	0.2	1.3	-8.0	2.1	3.1	0.0
				Min	656	0.1	-0.7	5.2	-0.2	1.6	0.0
					692	-0.1	-0.9	2.8	0.1	-0.5	0.0
					73	-0.3	-0.1	2.4	2.1	-0.9	0.0
					15	-0.8	0.6	-12.6	1.5	0.7	-0.0
674	1	1	SX (RS)		692	0.2	0.4	0.2	0.0	0.5	0.0
					693	0.5	0.2	1.3	0.1	0.1	0.0
					74	0.2	0.4	0.5	0.3	0.1	0.0
					73	0.6	0.2	1.8	0.4	0.5	0.0
			SY (RS)		692	0.3	0.4	5.6	1.0	0.5	0.0
					693	0.8	0.5	0.6	1.3	0.2	0.0
					74	0.4	0.2	0.6	0.3	0.6	0.0
					73	0.8	0.4	5.7	0.8	0.3	0.0
			RC ENV~1	Max	692	0.4	0.4	8.2	0.5	1.8	0.0
					693	0.9	0.4	2.6	1.7	1.6	0.0
					74	0.4	0.4	3.8	1.3	1.3	0.0
					73	0.7	0.5	1.9	1.6	1.3	0.0
				Min	692	-0.3	-0.4	-3.1	-1.6	-0.3	0.0
					693	-0.7	-0.6	-0.2	-0.9	-0.9	0.0
					74	-0.4	-0.3	1.6	0.5	-1.0	0.0
					73	-0.9	-0.3	-9.4	-0.3	-1.2	0.0
			RC ENV~2	Max	692	0.0	0.1	2.6	-0.5	1.1	0.0
					693	0.3	-0.1	1.9	0.4	1.4	0.0
					74	0.1	0.1	3.3	1.0	0.7	0.0
					73	0.0	0.2	-1.3	1.1	0.7	0.0
				Min	692	-0.1	-0.1	2.0	-0.8	0.1	0.0
					693	-0.0	-0.2	0.7	-0.3	-0.3	0.0
					74	-0.0	-0.0	1.6	0.8	-0.5	0.0
					73	-0.3	0.1	-4.1	0.5	-0.7	0.0
675	1	1	SX (RS)		693	0.3	0.3	0.5	0.1	0.1	0.0
					694	0.2	0.2	0.7	0.1	0.3	0.0
					75	0.3	0.2	0.5	0.1	0.4	0.0
					74	0.2	0.2	0.6	0.2	0.1	0.0
			SY (RS)		693	0.3	0.1	1.0	0.5	0.6	0.0
					694	0.7	0.4	0.8	0.9	0.3	0.0
					75	0.3	0.2	1.4	0.3	0.4	0.0
					74	0.7	0.5	1.6	1.0	0.2	0.0
			RC ENV~1	Max	693	0.3	0.2	2.9	0.3	1.2	0.0
					694	0.7	0.3	1.1	1.3	1.8	0.0
					75	0.3	0.3	3.9	0.6	1.4	0.0
					74	0.7	0.6	0.8	0.8	1.0	0.0
				Min	693	-0.3	-0.3	0.9	-0.7	-1.2	0.0
					694	-0.7	-0.5	-0.6	-0.6	-1.1	0.0
					75	-0.3	-0.2	1.1	-0.1	-1.1	0.0
					74	-0.8	-0.4	-3.0	-1.2	-1.5	0.0
			RC ENV~2	Max	693	0.0	-0.0	1.9	-0.2	0.6	0.0

					694	0.1	-0.1	0.8	0.4	1.5	0.0
					75	0.1	0.1	2.5	0.4	1.1	0.0
					74	-0.0	0.2	0.2	0.3	0.4	0.0
				Min	693	-0.1	-0.2	1.0	-0.5	-0.6	0.0
					694	0.0	-0.2	0.1	-0.3	-0.4	0.0
					75	0.0	0.0	1.4	0.2	-0.5	0.0
					74	-0.1	0.1	-1.5	-0.2	-1.3	0.0
676	1	1	SX (RS)		694	0.4	0.2	0.6	0.1	0.4	0.0
					695	0.1	0.2	0.6	0.1	0.6	0.0
					76	0.4	0.2	0.4	0.1	0.6	0.0
					75	0.1	0.2	0.5	0.1	0.3	0.0
			SY (RS)		694	0.1	0.2	1.1	0.5	0.4	0.0
					695	0.6	0.3	0.7	0.7	0.3	0.0
					76	0.2	0.2	1.0	0.4	0.3	0.0
					75	0.7	0.3	1.5	0.6	0.3	0.0
			RC ENV~1	Max	694	0.3	0.2	3.0	0.5	1.1	0.0
					695	0.6	0.3	0.8	1.0	1.9	0.0
					76	0.5	0.3	2.5	0.5	1.7	0.0
					75	0.6	0.4	1.8	0.5	1.1	0.0
				Min	694	-0.5	-0.3	0.7	-0.7	-1.4	0.0
					695	-0.6	-0.3	-0.8	-0.7	-1.4	0.0
					76	-0.4	-0.2	0.5	-0.3	-1.3	0.0
					75	-0.7	-0.3	-1.5	-0.8	-1.8	0.0
			RC ENV~2	Max	694	-0.0	-0.0	1.9	0.0	0.5	0.0
					695	0.1	0.0	0.5	0.3	1.4	0.0
					76	0.2	0.1	1.5	0.3	1.1	0.0
					75	-0.0	0.1	1.1	0.3	0.4	0.0
				Min	694	-0.2	-0.1	0.8	-0.4	-1.1	0.0
					695	0.0	-0.1	-0.2	-0.4	-0.7	0.0
					76	0.0	0.0	0.8	0.0	-0.7	0.0
					75	-0.1	0.0	-0.1	-0.3	-1.5	0.0
677	1	1	SX (RS)		695	0.6	0.1	0.7	0.2	0.6	0.0
					696	0.2	0.3	0.6	0.1	0.9	0.0
					77	0.6	0.1	0.4	0.2	0.9	0.0
					76	0.2	0.2	0.4	0.1	0.6	0.0
			SY (RS)		695	0.0	0.2	0.8	0.5	0.3	0.0
					696	0.6	0.3	0.8	0.6	0.3	0.0
					77	0.0	0.2	1.0	0.4	0.3	0.0
					76	0.6	0.3	1.0	0.5	0.3	0.0
			RC ENV~1	Max	695	0.4	0.1	2.8	0.5	1.3	0.0
					696	0.6	0.3	0.6	0.6	1.6	0.0
					77	0.7	0.3	1.3	0.7	1.6	0.0
					76	0.6	0.3	2.8	0.7	1.3	0.0
				Min	695	-0.7	-0.3	0.8	-0.8	-1.7	0.0
					696	-0.6	-0.3	-1.2	-1.0	-2.0	0.0
					77	-0.5	-0.2	-0.7	-0.3	-1.8	0.0
					76	-0.6	-0.3	0.2	-0.7	-1.9	0.0
			RC ENV~2	Max	695	0.0	-0.1	2.1	0.0	0.6	0.0
					696	0.1	0.1	0.4	0.1	0.8	0.0
					77	0.4	0.1	0.3	0.5	0.8	0.0
					76	0.1	0.0	2.0	0.4	0.6	0.0
				Min	695	-0.3	-0.2	0.9	-0.5	-1.2	0.0
					696	-0.1	-0.0	-0.4	-0.6	-1.1	0.0
					77	-0.0	0.1	-0.2	0.1	-1.0	0.0
					76	-0.1	-0.1	1.2	-0.1	-1.4	0.0
678	1	1	SX (RS)		696	0.8	0.1	0.8	0.2	0.9	0.0

					697	0.4	0.4	0.7	0.2	1.1	0.0
					78	0.8	0.0	0.4	0.3	1.2	0.0
					77	0.4	0.3	0.4	0.2	0.9	0.0
				SY (RS)	696	0.2	0.4	0.8	0.6	0.3	0.0
					697	0.5	0.2	0.8	0.6	0.2	0.0
					78	0.2	0.4	1.0	0.7	0.3	0.0
					77	0.6	0.3	0.9	0.5	0.3	0.0
			RC ENV~1	Max	696	0.6	0.2	3.7	0.6	1.7	0.0
					697	0.5	0.4	1.4	0.3	0.9	0.0
					78	1.0	0.6	-1.3	1.5	0.9	0.0
					77	0.6	0.3	4.0	1.4	1.8	0.0
				Min	696	-1.0	-0.5	1.9	-0.9	-1.7	0.0
					697	-0.6	-0.4	-0.7	-1.3	-3.0	0.0
					78	-0.7	-0.2	-3.7	-0.0	-2.9	0.0
					77	-0.6	-0.3	1.5	-0.0	-1.7	0.0
			RC ENV~2	Max	696	0.0	-0.1	2.9	-0.0	0.9	0.0
					697	0.2	0.1	0.9	-0.2	-0.2	0.0
					78	0.5	0.3	-2.1	1.1	-0.2	0.0
					77	0.1	0.1	3.0	0.9	1.0	0.0
				Min	696	-0.5	-0.2	1.7	-0.6	-0.9	0.0
					697	-0.1	-0.1	0.1	-0.9	-2.0	0.0
					78	-0.1	0.1	-2.8	0.6	-1.9	0.0
					77	-0.2	-0.1	2.4	0.4	-0.9	0.0
679	1	1		SX (RS)	697	1.2	0.1	1.7	0.2	1.2	0.0
					698	0.6	0.6	0.4	0.2	1.5	0.0
					79	1.3	0.1	1.9	0.7	1.7	0.0
					78	0.7	0.6	0.5	0.4	1.1	0.0
				SY (RS)	697	0.3	0.5	0.5	0.9	0.2	0.0
					698	0.5	0.4	3.1	0.8	0.2	0.0
					79	0.3	0.4	3.1	0.2	0.2	0.0
					78	0.6	0.3	0.5	0.3	0.2	0.0
			RC ENV~1	Max	697	1.0	0.3	5.6	0.6	2.6	0.0
					698	0.6	0.7	4.3	0.2	0.4	0.0
					79	1.6	0.6	0.2	2.7	0.6	0.0
					78	0.7	0.5	1.9	2.5	2.9	0.0
				Min	697	-1.5	-0.7	2.3	-1.2	-1.1	0.0
					698	-0.6	-0.6	-2.0	-1.7	-3.8	0.0
					79	-1.1	-0.2	-6.0	0.8	-3.6	0.0
					78	-0.7	-0.6	0.5	0.8	-0.9	0.0
			RC ENV~2	Max	697	0.1	-0.2	4.0	-0.2	1.7	0.0
					698	0.3	0.3	2.1	-0.5	-1.0	0.0
					79	0.9	0.2	-1.8	2.0	-1.0	0.0
					78	0.2	0.1	1.4	1.8	1.9	0.0
				Min	697	-0.8	-0.3	2.5	-0.8	-0.0	0.0
					698	-0.2	-0.1	1.1	-1.2	-2.6	0.0
					79	-0.2	0.1	-4.0	1.4	-2.5	0.0
					78	-0.3	-0.3	0.9	1.2	0.1	0.0
680	1	1		SX (RS)	698	2.1	0.7	4.2	0.5	1.8	0.0
					246	0.1	1.1	2.7	0.5	1.0	0.0
					16	3.2	0.8	3.1	0.9	5.6	0.0
					79	1.2	1.1	1.5	0.2	1.5	0.0
				SY (RS)	698	0.8	1.6	3.0	1.4	0.4	0.0
					246	1.0	0.9	1.4	1.2	0.1	0.0
					16	0.8	2.6	2.6	4.1	0.8	0.0
					79	1.0	0.2	1.8	0.8	0.4	0.0

RC ENV~1	Max	698	1.6	0.9	8.7	0.9	3.3	0.0
		246	0.8	0.7	5.9	0.7	-1.3	0.0
		16	3.8	3.7	-2.0	5.6	3.1	0.0
		79	1.3	1.1	4.2	3.6	3.6	0.0
	Min	698	-2.6	-2.4	0.3	-1.8	-1.0	0.0
		246	-1.3	-1.4	-1.1	-1.7	-5.1	0.0
		16	-2.5	-1.5	-10.8	-2.6	-8.0	-0.0
		79	-1.1	-1.1	0.3	1.1	-0.5	0.0
RC ENV~2	Max	698	0.2	-0.5	5.6	-0.2	2.2	0.0
		246	-0.2	0.1	4.1	-0.5	-2.3	0.0
		16	2.1	1.8	-3.9	2.3	-0.8	-0.0
		79	0.6	0.4	3.1	2.6	2.5	0.0
	Min	698	-1.5	-1.3	2.5	-0.8	0.7	0.0
		246	-0.4	-0.9	1.5	-1.1	-3.7	0.0
		16	-0.4	0.8	-7.9	1.4	-4.7	-0.0
		79	-0.4	-0.5	1.2	1.9	0.9	0.0

PLATE ELEMENT FORCES (LOCAL, UNIT LENGTH) PRINTOUT Unit System : kN , m

ELEM	MAT	SEC	LC		NODE	Fxx	Fyy	Fxy	Fmax	Fmin	ANGLE
5	1	1	SX	(RS)	Cent	6.1	0.6	3.4	7.7	-1.0	25.72
					5	12.0	0.4	3.4	13.0	-0.5	15.20
					109	12.0	0.9	3.4	13.0	-0.0	15.76
					401	0.2	0.9	3.4	4.0	-2.9	48.14
					139	0.2	0.4	3.4	3.7	-3.1	46.02

		NODE	Mxx	Myy	Mxy	Mmax	Mmin	ANGLE
		Cent	9.1	1.0	2.9	10.0	0.1	17.50
		5	27.4	2.5	6.4	29.0	1.0	13.54
		109	6.9	3.0	0.7	7.0	2.8	10.16
		401	5.5	0.8	0.7	5.6	0.7	7.91
		139	3.6	1.1	7.0	9.5	-4.8	39.91

		NODE	Vxx	Vyy
		Cent	10.6	0.8
		5	37.0	5.8
		109	37.0	6.5
		401	15.8	6.5
		139	15.8	5.8

LC		NODE	Fxx	Fyy	Fxy	Fmax	Fmin	ANGLE
SY	(RS)	Cent	0.7	4.4	3.1	6.1	-1.1	60.78
		5	0.9	9.2	3.1	10.2	-0.1	71.81
		109	0.9	0.6	3.1	3.8	-2.3	43.78
		401	0.8	0.6	3.1	3.8	-2.3	44.11
		139	0.8	9.2	3.1	10.2	-0.2	71.93

		NODE	Mxx	Myy	Mxy	Mmax	Mmin	ANGLE
		Cent	1.0	6.4	2.1	7.1	0.3	71.26
		5	2.5	19.4	4.4	20.5	1.4	76.42
		109	0.8	2.7	4.7	6.6	-3.1	50.77
		401	0.6	3.4	0.5	3.4	0.6	80.82
		139	2.4	5.5	0.2	5.5	2.3	87.02

		NODE	Vxx	Vyy
		Cent	0.5	7.8
		5	3.5	27.0
		109	3.5	11.5
		401	4.5	11.5
		139	4.5	27.0

LC		NODE	Fxx	Fyy	Fxy	Fmax	Fmin	ANGLE
RC ENV~1	Max	Cent	6.7	6.5	4.8	9.9	-0.3	33.61
		5	13.6	13.2	4.8	15.6	3.7	23.30
		109	13.6	1.0	4.8	15.2	-0.6	18.71
		401	0.6	1.0	4.8	5.3	-0.4	48.02
		139	0.6	13.2	4.8	14.6	-0.4	72.39
	Min	Cent	-5.4	-2.4	-2.0	0.9	-6.0	-27.33
		5	-10.5	-5.1	-2.0	1.1	-10.8	-14.96
		109	-10.5	-0.9	-2.0	-0.5	-10.9	-78.70
		401	-1.0	-0.9	-2.0	0.7	-4.6	63.85
		139	-1.0	-5.1	-2.0	-0.4	-5.7	-19.41

		NODE	Mxx	Myy	Mxy	Mmax	Mmin	ANGLE
	Max	Cent	14.6	11.1	1.7	14.9	7.1	10.42
		5	37.5	25.5	4.9	38.3	12.5	9.38
		109	8.9	11.8	3.2	13.8	8.4	-64.06
		401	9.1	7.1	0.0	9.5	4.5	-25.18
		139	10.5	7.6	6.5	14.0	7.5	31.13
	Min	Cent	-3.6	-1.7	-4.0	5.5	-5.3	-66.27
		5	-17.3	-13.4	-7.8	6.2	-19.9	-71.59
		109	-4.9	4.0	-6.3	4.6	-5.5	-76.34
		401	-1.9	0.4	-2.6	3.3	-2.2	-75.62

139	2.8	-3.3	-7.6	4.1	-5.7	-5.33

	NODE	Vxx	Vyy
Max	Cent	24.0	14.3
	5	51.9	33.2
	109	51.9	18.3
	401	21.4	18.3
	139	21.4	33.2
Min	Cent	-0.4	-1.2
	5	-22.2	-20.8
	109	-22.2	-4.6
	401	-10.2	-4.6
	139	-10.2	-20.8

LC		NODE	Fxx	Fyy	Fxy	Fmax	Fmin	ANGLE
RC ENV~2	Max	Cent	3.4	3.4	3.1	5.9	-0.1	38.58
		5	7.1	6.5	3.1	9.1	2.7	33.13
		109	7.1	0.4	3.1	8.2	-0.8	19.88
		401	-0.1	0.4	3.1	2.8	-0.3	44.55
		139	-0.1	6.5	3.1	6.9	-0.3	67.93
	Min	Cent	-2.1	1.5	0.0	2.4	-2.1	81.40
		5	-3.8	3.4	0.0	4.4	-3.8	85.22
		109	-3.8	-0.3	0.0	0.4	-3.8	76.84
		401	-0.4	-0.3	0.0	0.4	-3.3	88.99
		139	-0.4	3.4	0.0	4.3	-1.7	73.79

	NODE	Mxx	Myy	Mxy	Mmax	Mmin	ANGLE
Max	Cent	9.6	5.7	-0.8	10.0	5.3	-15.60
	5	22.4	9.1	0.2	22.4	9.0	-1.49
	109	4.1	8.8	-1.3	10.1	3.0	-65.05
	401	6.1	4.2	-0.6	6.8	3.1	-25.76
	139	7.9	2.7	1.3	9.3	2.1	-24.61
Min	Cent	2.5	4.6	-2.7	6.0	1.0	-59.72
	5	1.2	5.8	-4.0	8.1	-0.5	-63.38
	109	-0.7	6.0	-3.2	6.2	-1.1	-79.25
	401	1.7	3.5	-1.8	4.2	1.4	-58.08
	139	5.9	0.5	-3.3	6.2	0.4	15.16

	NODE	Vxx	Vyy
Max	Cent	17.2	10.2
	5	33.3	11.4
	109	33.3	10.8
	401	11.5	10.8
	139	11.5	11.4
Min	Cent	7.1	6.3
	5	3.0	6.0
	109	3.0	4.3
	401	0.8	4.3
	139	0.8	6.0

ELEM	MAT	SEC	LC		NODE	Fxx	Fyy	Fxy	Fmax	Fmin	ANGLE
6	1	1	SX (RS)		Cent	2.5	0.1	2.4	4.0	-1.4	31.35
					6	5.8	0.5	2.4	6.7	-0.4	20.94
					130	5.8	0.3	2.4	6.7	-0.6	20.48
					456	0.7	0.3	2.4	2.9	-1.9	42.66
					408	0.7	0.5	2.4	3.0	-1.8	43.70

	NODE	Mxx	Myy	Mxy	Mmax	Mmin	ANGLE
	Cent	4.6	1.2	1.5	5.1	0.6	20.09
	6	18.0	3.6	4.0	19.0	2.6	14.46
	130	2.1	2.0	0.7	2.7	1.4	43.00
	456	1.7	0.3	0.5	1.9	0.2	18.65
	408	3.4	0.7	4.2	6.4	-2.3	35.95

	NODE	Vxx	Vyy
	Cent	9.5	2.2
	6	27.9	0.0
	130	27.9	4.3
	456	9.0	4.3
	408	9.0	0.0

LC		NODE	Fxx	Fyy	Fxy	Fmax	Fmin	ANGLE
SY (RS)		Cent	1.9	5.8	3.4	7.8	-0.1	60.18
		6	2.6	12.1	3.4	13.2	1.5	72.29
		130	2.6	0.6	3.4	5.1	-1.9	37.02
		456	1.4	0.6	3.4	4.4	-2.4	41.86
		408	1.4	12.1	3.4	13.1	0.4	73.85

	NODE	Mxx	Myy	Mxy	Mmax	Mmin	ANGLE
	Cent	0.9	10.7	3.4	11.8	-0.1	72.56
	6	2.3	35.4	7.8	37.1	0.6	77.44
	130	2.7	6.5	8.6	13.4	-4.1	51.30
	456	2.7	4.9	0.1	4.9	2.7	87.36
	408	2.9	9.1	0.8	9.2	2.8	82.53

	NODE	Vxx	Vyy
	Cent	0.8	14.4
	6	6.8	50.7
	130	6.8	22.0
	456	8.2	22.0
	408	8.2	50.7

LC		NODE	Fxx	Fyy	Fxy	Fmax	Fmin	ANGLE
RC ENV~1	Max	Cent	2.5	7.3	4.1	9.5	-0.2	61.97
		6	6.0	15.0	4.1	16.2	1.6	73.13
		130	6.0	0.8	4.1	7.4	-0.6	23.94
		456	1.2	0.8	4.1	5.1	-0.2	43.67
		408	1.2	15.0	4.1	16.1	0.0	74.73
	Min	Cent	-2.6	-4.3	-2.7	-0.1	-6.1	-32.78
		6	-5.6	-9.3	-2.7	-1.5	-10.2	-19.12
		130	-5.6	-0.5	-2.7	0.3	-6.1	-73.97
		456	-1.6	-0.5	-2.7	0.3	-3.8	-88.99
		408	-1.6	-9.3	-2.7	-0.7	-10.2	-17.64

		NODE	Mxx	Myy	Mxy	Mmax	Mmin	ANGLE
	Max	Cent	9.9	16.2	1.0	16.3	6.3	84.99
		6	31.3	47.1	5.8	48.1	19.5	79.95
		130	2.0	14.2	5.7	16.4	0.8	68.50
		456	5.2	8.2	-1.8	9.3	3.7	-63.91
		408	7.1	8.3	2.8	8.5	5.9	-21.59
	Min	Cent	-0.2	-5.3	-5.9	6.4	-8.2	-26.61
		6	-4.7	-23.6	-9.7	10.5	-26.2	-68.52
		130	-3.4	1.1	-11.4	6.9	-12.9	-69.94
		456	-0.7	-1.7	-4.2	1.3	-3.7	-39.19
		408	-0.3	-9.9	-5.6	0.7	-10.3	-11.99

	NODE	Vxx	Vyy
Max	Cent	27.0	29.1
	6	51.6	70.8
	130	51.6	31.4
	456	12.4	31.4
	408	12.4	70.8
Min	Cent	4.1	0.4
	6	-4.2	-30.6
	130	-4.2	-12.6
	456	-5.5	-12.6
	408	-5.5	-30.6

LC		NODE	Fxx	Fyy	Fxy	Fmax	Fmin	ANGLE
RC ENV~2	Max	Cent	0.8	2.5	1.4	3.1	-0.1	62.43
		6	1.9	4.7	1.4	5.1	1.1	69.70
		130	1.9	0.3	1.4	2.7	-0.4	28.46
		456	-0.2	0.3	1.4	1.3	-0.2	51.38
		408	-0.2	4.7	1.4	5.0	-0.2	75.41
	Min	Cent	-0.9	1.3	0.1	1.4	-0.9	82.25
		6	-1.5	2.6	0.1	2.7	-1.5	85.63
		130	-1.5	0.0	0.1	0.2	-1.5	87.10
		456	-0.5	0.0	0.1	0.3	-1.6	77.76
		408	-0.5	2.6	0.1	2.7	-0.8	84.60

	NODE	Mxx	Myy	Mxy	Mmax	Mmin	ANGLE
Max	Cent	7.1	6.2	-2.3	9.5	3.8	-37.69
	6	21.6	14.7	-1.0	21.8	14.3	-9.73
	130	-0.2	8.9	-2.8	10.5	-1.4	-68.98
	456	3.8	3.4	-2.3	6.4	0.3	-40.79
	408	5.1	-0.7	-0.4	6.1	-1.2	-21.35
Min	Cent	3.4	5.2	-3.6	7.4	1.2	-51.88
	6	9.2	11.5	-3.6	14.1	7.2	-40.56
	130	-1.6	7.0	-4.2	7.9	-2.6	-73.45
	456	1.6	2.9	-3.1	5.0	-0.2	-53.28
	408	2.5	-2.9	-3.0	2.5	-3.3	-5.88

	NODE	Vxx	Vyy
Max	Cent	19.6	18.9
	6	37.1	26.0
	130	37.1	13.2
	456	6.7	13.2
	408	6.7	26.0
Min	Cent	12.1	14.6
	6	17.6	20.0
	130	17.6	8.2
	456	1.2	8.2
	408	1.2	20.0

ELEM	MAT	SEC	LC		NODE	Fxx	Fyy	Fxy	Fmax	Fmin	ANGLE
7	1	1	SX	(RS)	Cent	6.0	1.1	3.2	7.5	-0.5	26.29
					8	11.9	1.4	3.2	12.8	0.5	15.66
					449	11.9	1.2	3.2	12.8	0.3	15.35
					505	0.5	1.2	3.2	4.1	-2.4	47.97
					158	0.5	1.4	3.2	4.2	-2.2	49.13

NODE	Mxx	Myy	Mxy	Mmax	Mmin	ANGLE
Cent	12.3	3.1	2.4	12.9	2.6	13.76
8	38.7	7.8	7.4	40.3	6.1	12.79
449	7.8	4.9	1.8	8.7	4.1	26.01
505	7.1	0.7	1.4	7.4	0.4	11.42
158	4.2	1.1	7.9	10.6	-5.4	39.39

NODE	Vxx	Vyy
Cent	17.4	4.1
8	54.4	0.6
449	54.4	8.2
505	19.6	8.2
158	19.6	0.6

LC		NODE	Fxx	Fyy	Fxy	Fmax	Fmin	ANGLE
SY	(RS)	Cent	1.8	5.0	4.6	8.3	-1.4	54.54
		8	3.7	11.5	4.6	13.6	1.5	65.11
		449	3.7	1.4	4.6	7.3	-2.2	38.10
		505	0.6	1.4	4.6	5.6	-3.6	47.47
		158	0.6	11.5	4.6	13.1	-1.1	69.83

NODE	Mxx	Myy	Mxy	Mmax	Mmin	ANGLE
Cent	2.9	7.7	2.1	8.4	2.1	69.49
8	9.6	25.3	5.3	26.9	8.0	73.06
449	1.6	3.4	5.1	7.6	-2.6	50.02
505	1.1	3.5	0.6	3.6	1.0	77.03
158	3.6	5.4	2.5	7.1	1.9	54.91

NODE	Vxx	Vyy
Cent	5.0	12.4
8	12.0	37.6
449	12.0	13.0
505	7.4	13.0
158	7.4	37.6

LC	NODE	Fxx	Fyy	Fxy	Fmax	Fmin	ANGLE

LC		NODE	Fxx	Fyy	Fxy	Fmax	Fmin	ANGLE
RC ENV~1	Max	Cent	3.3	5.4	3.2	6.8	0.4	67.16
		8	6.7	11.3	3.2	12.0	0.7	76.61
		449	6.7	2.7	3.2	7.4	1.5	19.18
		505	0.4	2.7	3.2	7.2	-0.3	-52.59
		158	0.4	11.3	3.2	12.1	-0.3	74.69
	Min	Cent	-11.4	-4.6	-6.0	0.3	-13.8	57.45
		8	-22.2	-11.7	-6.0	-4.1	-23.7	-38.41
		449	-22.2	-0.4	-6.0	0.7	-23.5	66.08
		505	-0.9	-0.4	-6.0	0.7	-6.6	86.51
		158	-0.9	-11.7	-6.0	-0.2	-14.3	45.65

		NODE	Mxx	Myy	Mxy	Mmax	Mmin	ANGLE
	Max	Cent	27.8	17.7	1.9	27.9	17.6	-4.70
		8	85.0	43.6	9.9	86.6	41.3	10.80
		449	10.1	16.6	3.3	19.2	10.1	-65.39
		505	14.1	9.6	-0.8	18.6	5.7	-35.93
		158	9.7	7.4	9.9	16.8	3.7	35.66
	Min	Cent	-1.1	0.5	-3.0	6.1	-2.2	-68.42
		8	-7.2	-6.9	-4.9	11.8	-8.5	-75.63
		449	-5.4	2.2	-6.8	3.6	-6.8	-68.64
		505	-1.5	1.5	-6.5	6.0	-3.2	-64.75
		158	1.4	-3.4	-5.8	2.0	-4.6	-4.44

		NODE	Vxx	Vyy
	Max	Cent	59.4	32.4
		8	130.6	59.1
		449	130.6	18.5
		505	20.7	18.5
		158	20.7	59.1
	Min	Cent	7.2	1.1
		8	-6.3	-16.2
		449	-6.3	-7.5
		505	-18.6	-7.5
		158	-18.6	-16.2

LC		NODE	Fxx	Fyy	Fxy	Fmax	Fmin	ANGLE
RC ENV~2	Max	Cent	1.4	0.6	0.7	2.3	0.1	-67.98
		8	3.0	0.0	0.7	3.2	-0.1	13.35
		449	3.0	2.0	0.7	3.2	0.5	14.70
		505	-0.2	2.0	0.7	5.1	-0.2	-52.80
		158	-0.2	0.0	0.7	3.6	-0.3	-43.69
	Min	Cent	-7.9	0.2	-4.1	0.2	-9.6	-74.09
		8	-15.5	-0.7	-4.1	-0.1	-16.6	-73.45
		449	-15.5	0.3	-4.1	0.6	-16.4	-81.21
		505	-0.5	0.3	-4.1	0.6	-3.5	-80.41
		158	-0.5	-0.7	-4.1	-0.1	-4.7	-46.85

		NODE	Mxx	Myy	Mxy	Mmax	Mmin	ANGLE
	Max	Cent	20.0	12.8	-0.2	20.1	12.8	-4.45
		8	60.7	30.9	6.2	61.8	29.8	10.85
		449	5.5	12.0	-1.4	13.7	3.8	-65.98
		505	10.1	7.0	-2.0	13.3	3.8	-36.09
		158	7.2	2.3	5.6	8.7	2.0	37.77
	Min	Cent	5.8	6.4	-2.0	8.0	4.2	-50.19
		8	14.3	14.3	-1.0	15.4	13.3	-45.39
		449	-0.8	4.7	-3.9	5.0	-1.2	-76.83
		505	2.4	4.4	-4.6	5.7	1.1	-58.23
		158	4.3	1.4	-1.7	6.3	-2.9	18.40

		NODE	Vxx	Vyy
	Max	Cent	42.7	23.3
		8	93.2	35.1
		449	93.2	11.4
		505	9.3	11.4
		158	9.3	35.1
	Min	Cent	16.5	11.1
		8	23.7	20.4
		449	23.7	1.8
		505	-8.5	1.8
		158	-8.5	20.4

ELEM	MAT	SEC	LC		NODE	Fxx	Fyy	Fxy	Fmax	Fmin	ANGLE
8	1	1	SX	(RS)	Cent	4.8	0.2	3.4	6.6	-1.6	28.01
					9	10.6	1.0	3.4	11.7	-0.1	17.55
					498	10.6	0.5	3.4	11.7	-0.5	16.94
					560	1.0	0.5	3.4	4.2	-2.6	42.83
					512	1.0	1.0	3.4	4.4	-2.4	44.73

		NODE	Mxx	Myy	Mxy	Mmax	Mmin	ANGLE
		Cent	12.7	3.2	3.0	13.6	2.3	16.40
		9	47.6	9.5	9.7	49.9	7.2	13.53
		498	6.5	5.5	2.4	8.4	3.6	39.14
		560	5.6	0.4	1.8	6.2	-0.1	17.45
		512	9.1	1.8	10.3	16.3	-5.4	35.27

		NODE	Vxx	Vyy
		Cent	23.2	5.5
		9	72.2	0.0
		498	72.2	11.0
		560	25.8	11.0
		512	25.8	0.0

LC		NODE	Fxx	Fyy	Fxy	Fmax	Fmin	ANGLE
SY	(RS)	Cent	0.1	6.6	4.4	8.8	-2.1	63.21
		9	1.0	14.8	4.4	16.0	-0.3	73.86
		498	1.0	1.7	4.4	5.7	-3.0	47.29
		560	0.8	1.7	4.4	5.6	-3.1	47.87
		512	0.8	14.8	4.4	16.0	-0.4	74.02

		NODE	Mxx	Myy	Mxy	Mmax	Mmin	ANGLE
		Cent	3.6	13.7	3.1	14.6	2.7	74.33
		9	10.3	47.0	8.7	49.0	8.3	77.27
		498	1.8	7.1	9.3	14.1	-5.2	53.00
		560	0.6	5.9	1.1	6.1	0.4	78.12
		512	6.4	9.0	1.7	9.8	5.6	64.23

		NODE	Vxx	Vyy
		Cent	6.8	23.5
		9	2.2	71.5
		498	2.2	24.4
		560	11.4	24.4
		512	11.4	71.5

LC		NODE	Fxx	Fyy	Fxy	Fmax	Fmin	ANGLE
RC ENV~1	Max	Cent	3.9	7.2	4.2	9.1	-0.0	66.77
		9	9.7	15.2	4.2	16.3	0.5	75.43
		498	9.7	2.6	4.2	10.9	0.8	19.10
		560	0.1	2.6	4.2	5.7	-1.2	53.91
		512	0.1	15.2	4.2	16.3	-1.2	75.58
	Min	Cent	-5.7	-5.9	-4.5	0.8	-8.5	78.79
		9	-11.5	-14.3	-4.5	-0.5	-15.8	-17.92
		498	-11.5	-0.8	-4.5	1.1	-12.5	69.17
		560	-2.5	-0.8	-4.5	1.0	-5.8	84.29
		512	-2.5	-14.3	-4.5	-0.3	-15.8	-17.74

		NODE	Mxx	Myy	Mxy	Mmax	Mmin	ANGLE
	Max	Cent	16.4	20.9	0.3	21.2	10.4	-47.37
		9	63.3	66.7	8.3	68.0	43.7	80.11
		498	2.0	12.2	7.1	15.1	2.0	68.21
		560	7.4	10.4	-1.3	15.7	4.3	-48.32
		512	11.9	8.4	7.8	16.0	8.0	27.89
	Min	Cent	-8.9	-6.5	-6.9	3.6	-11.2	-30.18
		9	-31.8	-27.3	-11.2	8.4	-34.6	-15.91
		498	-11.1	-2.0	-11.4	1.2	-15.8	-69.88
		560	-4.6	-1.3	-7.4	3.9	-6.9	-39.45
		512	-6.2	-9.6	-12.7	-1.5	-17.1	-26.70

		NODE	Vxx	Vyy
	Max	Cent	44.8	42.5

		9	103.3	105.4
		498	103.3	27.6
		560	30.9	27.6
		512	30.9	105.4
	Min	Cent	-5.1	-5.0
		9	-41.1	-37.5
		498	-41.1	-21.2
		560	-20.7	-21.2
		512	-20.7	-37.5

LC		NODE	Fxx	Fyy	Fxy	Fmax	Fmin	ANGLE
RC ENV~2	Max	Cent	0.1	1.2	0.3	1.2	-0.1	-82.03
		9	1.0	0.8	0.3	1.2	0.3	25.09
		498	1.0	1.6	0.3	1.6	0.5	-83.67
		560	-0.8	1.6	0.3	1.6	-0.9	-81.74
		512	-0.8	0.8	0.3	0.9	-0.9	-79.31
	Min	Cent	-2.3	0.6	-0.7	0.6	-2.5	82.16
		9	-3.3	0.3	-0.7	0.4	-3.4	-82.82
		498	-3.3	0.8	-0.7	0.8	-3.4	77.84
		560	-1.8	0.8	-0.7	0.8	-1.9	85.64
		512	-1.8	0.3	-0.7	0.4	-1.9	-82.76

		NODE	Mxx	Myy	Mxy	Mmax	Mmin	ANGLE
	Max	Cent	10.2	11.5	-2.7	15.2	6.5	-49.04
		9	33.3	32.4	-0.2	34.3	31.4	-36.00
		498	-3.7	8.2	-2.1	9.3	-4.7	-74.42
		560	5.1	6.8	-3.1	11.3	0.6	-49.66
		512	8.1	-0.5	-1.3	10.3	-1.6	-23.58
	Min	Cent	1.7	5.6	-4.9	8.2	-0.7	-58.49
		9	8.1	17.7	-3.9	18.9	6.9	-71.32
		498	-5.8	3.0	-3.7	3.7	-6.5	-76.31
		560	0.1	2.9	-5.3	5.7	-2.5	-58.07
		512	2.0	-2.7	-5.3	2.4	-4.7	-16.65

		NODE	Vxx	Vyy
	Max	Cent	32.1	30.7
		9	58.4	55.0
		498	58.4	6.3
		560	10.9	6.3
		512	10.9	55.0
	Min	Cent	14.7	18.2
		9	19.8	33.7
		498	19.8	1.6
		560	1.5	1.6
		512	1.5	33.7

ELEM	MAT	SEC	LC		NODE	Fxx	Fyy	Fxy	Fmax	Fmin	ANGLE
9	1	1	SX (RS)		Cent	6.0	1.0	3.1	7.4	-0.5	25.53
					11	11.9	1.2	3.1	12.7	0.4	15.07
					553	11.9	1.1	3.1	12.7	0.3	14.96
					609	0.5	1.1	3.1	3.9	-2.3	48.09
					177	0.5	1.2	3.1	4.0	-2.3	48.51

		NODE	Mxx	Myy	Mxy	Mmax	Mmin	ANGLE
		Cent	12.3	3.2	2.6	13.0	2.5	14.99
		11	38.6	7.9	7.6	40.4	6.1	13.19
		553	7.8	4.9	1.7	8.5	4.2	24.95
		609	7.0	0.7	1.3	7.2	0.4	11.64
		177	4.3	1.1	8.1	10.9	-5.5	39.50

		NODE	Vxx	Vyy
		Cent	17.4	4.3
		11	54.3	0.4
		553	54.3	8.3
		609	19.5	8.3
		177	19.5	0.4

LC		NODE	Fxx	Fyy	Fxy	Fmax	Fmin	ANGLE
SY (RS)		Cent	1.8	5.0	4.3	8.0	-1.2	55.03

		11	3.7	11.3	4.3	13.3	1.8	65.82
		553	3.7	1.4	4.3	7.0	-1.9	37.47
		609	0.6	1.4	4.3	5.3	-3.3	47.68
		177	0.6	11.3	4.3	12.8	-0.9	70.69

	NODE	Mxx	Myy	Mxy	Mmax	Mmin	ANGLE
	Cent	2.6	4.9	2.0	6.0	1.5	60.15
	11	9.1	21.9	5.1	23.7	7.4	70.70
	553	1.7	6.0	5.2	9.5	-1.8	56.31
	609	1.4	1.2	0.7	2.0	0.6	41.28
	177	3.1	3.1	1.6	4.6	1.5	44.67

	NODE	Vxx	Vyy
	Cent	4.6	11.4
	11	12.0	35.9
	553	12.0	13.2
	609	7.2	13.2
	177	7.2	35.9

LC		NODE	Fxx	Fyy	Fxy	Fmax	Fmin	ANGLE
RC ENV~1	Max	Cent	3.2	5.5	2.9	6.6	0.5	68.95
		11	6.7	11.4	2.9	12.0	0.8	78.03
		553	6.7	2.6	2.9	7.2	1.5	17.94
		609	0.4	2.6	2.9	7.1	-0.3	-52.28
		177	0.4	11.4	2.9	12.1	-0.3	76.27
	Min	Cent	-11.3	-4.5	-5.8	0.3	-13.6	66.42
		11	-22.2	-11.3	-5.8	-4.3	-23.6	-39.18
		553	-22.2	-0.5	-5.8	0.7	-23.5	33.22
		609	-0.8	-0.5	-5.8	0.6	-6.4	85.17
		177	-0.8	-11.3	-5.8	0.1	-13.8	78.21

	NODE	Mxx	Myy	Mxy	Mmax	Mmin	ANGLE
Max	Cent	24.7	10.5	2.4	24.7	10.5	0.16
	11	81.0	36.3	10.4	82.7	32.7	10.63
	553	8.8	10.6	3.7	13.5	8.2	-60.17
	609	10.5	1.8	-0.7	12.9	0.7	-26.92
	177	8.9	0.8	10.3	15.4	-0.9	32.09
Min	Cent	-2.3	-1.0	-2.8	2.4	-4.1	-58.99
	11	-8.2	-7.4	-4.8	8.0	-9.6	-73.42
	553	-6.7	-2.7	-6.7	-0.1	-8.5	-64.18
	609	-3.4	-1.7	-5.7	0.9	-5.7	-41.25
	177	0.3	-5.3	-5.8	1.6	-10.1	5.74

	NODE	Vxx	Vyy
Max	Cent	59.0	32.3
	11	128.0	58.0
	553	128.0	20.6
	609	22.1	20.6
	177	22.1	58.0
Min	Cent	8.2	3.3
	11	-5.6	-13.8
	553	-5.6	-5.9
	609	-16.9	-5.9
	177	-16.9	-13.8

LC		NODE	Fxx	Fyy	Fxy	Fmax	Fmin	ANGLE
RC ENV~2	Max	Cent	1.4	1.0	0.7	2.5	0.1	-68.52
		11	3.0	0.3	0.7	3.1	0.2	13.53
		553	3.0	1.8	0.7	3.1	0.4	13.80
		609	-0.2	1.8	0.7	5.0	-0.2	-52.47
		177	-0.2	0.3	0.7	3.8	-0.3	-45.81
	Min	Cent	-7.9	0.2	-4.1	0.3	-9.5	-75.38
		11	-15.5	-0.2	-4.1	0.1	-16.5	-70.06
		553	-15.5	0.3	-4.1	0.5	-16.4	-79.85
		609	-0.4	0.3	-4.1	0.5	-3.5	-78.59
		177	-0.4	-0.2	-4.1	0.1	-4.3	-65.52

	NODE	Mxx	Myy	Mxy	Mmax	Mmin	ANGLE
Max	Cent	17.8	7.6	0.1	17.9	7.6	0.31
	11	58.1	24.9	6.5	59.3	23.7	10.65

553	4.0	7.6	-1.1	9.5	1.8	-60.52
609	7.4	1.2	-1.8	9.2	-0.7	-26.47
177	5.6	-2.2	6.0	6.3	-2.5	31.24
Min Cent	3.7	1.4	-1.7	4.4	0.6	-26.30
11	11.7	8.7	-0.8	11.9	8.5	-13.28
553	-2.4	0.2	-3.5	0.6	-2.8	-69.48
609	-0.2	-1.1	-4.0	1.2	-2.9	-37.74
177	2.6	-3.5	-1.4	4.2	-7.1	9.95

	NODE	Vxx	Vyy
Max	Cent	42.7	23.5
	11	91.8	33.3
	553	91.8	13.7
	609	10.8	13.7
	177	10.8	33.3
Min	Cent	16.5	11.0
	11	22.2	18.6
	553	22.2	3.4
	609	-7.1	3.4
	177	-7.1	18.6

ELEM	MAT	SEC	LC	NODE	Fxx	Fyy	Fxy	Fmax	Fmin	ANGLE
10	1	1	SX (RS)	Cent	4.8	0.2	2.5	5.9	-0.9	23.89
				12	10.6	1.0	2.5	11.2	0.3	13.77
				602	10.6	0.5	2.5	11.2	-0.1	13.27
				657	1.0	0.5	2.5	3.3	-1.7	42.06
				616	1.0	1.0	2.5	3.5	-1.5	44.51

	NODE	Mxx	Myy	Mxy	Mmax	Mmin	ANGLE
	Cent	12.6	3.2	3.3	13.7	2.2	17.72
	12	47.6	9.5	10.0	50.1	7.0	13.89
	602	6.5	5.6	2.1	8.2	3.9	38.68
	657	5.5	0.4	1.6	5.9	-0.0	15.80
	616	9.1	1.8	10.6	16.6	-5.7	35.52

	NODE	Vxx	Vyy
	Cent	23.3	5.5
	12	72.2	0.0
	602	72.2	11.1
	657	25.6	11.1
	616	25.6	0.0

LC	NODE	Fxx	Fyy	Fxy	Fmax	Fmin	ANGLE
SY (RS)	Cent	0.6	6.2	4.3	8.5	-1.8	61.32
	12	1.5	14.4	4.3	15.7	0.2	72.98
	602	1.5	2.1	4.3	6.2	-2.5	46.95
	657	0.4	2.1	4.3	5.7	-3.2	50.75
	616	0.4	14.4	4.3	15.6	-0.9	74.12

	NODE	Mxx	Myy	Mxy	Mmax	Mmin	ANGLE
	Cent	2.4	9.9	3.4	11.2	1.1	68.61
	12	7.4	41.4	8.9	43.6	5.2	76.19
	602	1.8	10.7	9.5	16.8	-4.3	57.53
	657	1.4	2.5	0.7	2.9	1.0	63.75
	616	5.4	6.3	1.4	7.3	4.4	53.96

	NODE	Vxx	Vyy
	Cent	4.3	20.8
	12	2.2	66.7
	602	2.2	25.0
	657	10.7	25.0
	616	10.7	66.7

LC		NODE	Fxx	Fyy	Fxy	Fmax	Fmin	ANGLE
RC ENV~1	Max	Cent	4.0	7.1	4.4	9.2	-0.1	64.71
		12	9.8	15.4	4.4	16.7	1.2	74.47
		602	9.8	2.9	4.4	10.6	0.6	15.79
		657	0.3	2.9	4.4	6.0	-1.0	55.36

		616	0.3	15.4	4.4	16.6	-1.0	75.41
	Min	Cent	-5.6	-5.2	-4.3	1.3	-8.0	84.19
		12	-11.4	-13.3	-4.3	-0.9	-14.8	-18.85
		602	-11.4	-1.3	-4.3	0.8	-11.9	-78.72
		657	-2.1	-1.3	-4.3	1.0	-5.5	83.22
		616	-2.1	-13.3	-4.3	0.2	-14.7	-17.44

	NODE	Mxx	Myy	Mxy	Mmax	Mmin	ANGLE
Max	Cent	15.7	14.3	-0.1	23.4	7.7	-42.77
	12	61.9	57.8	7.7	63.5	37.0	11.51
	602	1.9	13.9	6.5	16.1	1.8	70.99
	657	10.3	9.4	-2.0	19.8	1.9	-42.63
	616	10.5	2.3	7.6	14.9	1.8	-25.59
Min	Cent	-9.5	-5.4	-10.2	4.5	-12.9	-64.08
	12	-33.2	-25.1	-12.4	10.3	-36.7	-74.12
	602	-11.2	-7.5	-12.5	-0.1	-19.5	-65.28
	657	-4.3	-0.2	-10.2	4.2	-7.2	-44.96
	616	-7.7	-10.3	-13.5	-1.9	-20.3	-26.92

	NODE	Vxx	Vyy
Max	Cent	39.3	40.1
	12	101.5	100.7
	602	101.5	28.8
	657	28.2	28.8
	616	28.2	100.7
Min	Cent	-7.4	-1.9
	12	-42.9	-32.6
	602	-42.9	-21.2
	657	-23.0	-21.2
	616	-23.0	-32.6

LC		NODE	Fxx	Fyy	Fxy	Fmax	Fmin	ANGLE
RC ENV~2	Max	Cent	0.2	1.6	0.6	1.7	-0.1	79.49
		12	1.2	2.0	0.6	2.0	0.6	78.68
		602	1.2	1.4	0.6	1.6	0.3	32.80
		657	-0.7	1.4	0.6	1.4	-0.8	-88.13
		616	-0.7	2.0	0.6	2.0	-0.8	82.11
	Min	Cent	-2.1	0.9	-0.3	0.9	-2.1	87.03
		12	-3.1	1.0	-0.3	1.0	-3.1	-89.86
		602	-3.1	0.6	-0.3	0.8	-3.1	83.74
		657	-1.5	0.6	-0.3	0.8	-1.5	83.89
		616	-1.5	1.0	-0.3	1.0	-1.5	-89.83

	NODE	Mxx	Myy	Mxy	Mmax	Mmin	ANGLE
Max	Cent	10.5	9.8	-3.4	16.3	4.0	-43.47
	12	32.1	28.9	-2.1	34.5	26.5	-33.13
	602	-1.9	7.7	-2.9	10.3	-5.1	-65.67
	657	6.9	6.4	-3.5	13.6	-0.1	-43.19
	616	7.1	-3.1	-2.6	10.1	-5.2	-25.22
Min	Cent	2.1	4.3	-7.1	7.1	-2.3	-51.63
	12	7.0	14.6	-6.4	17.3	4.2	-60.68
	602	-4.8	2.4	-6.6	3.9	-6.4	-71.64
	657	1.0	2.3	-7.2	5.2	-1.9	-50.38
	616	1.2	-4.1	-7.0	2.2	-7.0	-22.54

	NODE	Vxx	Vyy
Max	Cent	28.2	29.3
	12	54.9	52.6
	602	54.9	6.0
	657	6.5	6.0
	616	6.5	52.6
Min	Cent	10.8	16.9
	12	16.3	33.1
	602	16.3	0.5
	657	-2.8	0.5
	616	-2.8	33.1

ELEM	MAT	SEC	LC		NODE	Fxx	Fyy	Fxy	Fmax	Fmin	ANGLE
25	1	1	SX (RS)		Cent	0.7	1.5	0.5	1.7	0.5	66.44
					20	1.1	2.1	0.5	2.3	0.9	68.47
					31	1.1	1.0	0.5	1.5	0.6	40.78

33	0.2	1.0	0.5	1.2	0.0	64.00
32	0.2	2.1	0.5	2.2	0.1	76.71

NODE	Mxx	Myy	Mxy	Mmax	Mmin	ANGLE
Cent	0.8	2.4	1.1	3.0	0.2	63.87
20	0.5	1.8	1.0	2.3	-0.0	61.80
31	2.0	4.7	1.1	5.1	1.6	69.99
33	1.0	0.3	1.0	1.7	-0.4	34.85
32	0.5	3.1	0.9	3.4	0.2	73.29

NODE	Vxx	Vyy
Cent	2.8	2.9
20	3.5	2.1
31	3.5	7.7
33	2.0	7.7
32	2.0	2.1

LC		NODE	Fxx	Fyy	Fxy	Fmax	Fmin	ANGLE
SY (RS)		Cent	0.2	1.1	0.3	1.1	0.1	74.54
		20	0.0	0.3	0.3	0.4	-0.1	56.15
		31	0.0	2.0	0.3	2.0	0.0	82.69
		33	0.4	2.0	0.3	2.0	0.3	81.38
		32	0.4	0.3	0.3	0.6	0.0	39.30

NODE	Mxx	Myy	Mxy	Mmax	Mmin	ANGLE
Cent	0.3	1.0	0.1	1.0	0.2	79.52
20	0.3	0.3	0.5	0.8	-0.2	44.14
31	0.7	5.2	0.6	5.3	0.6	82.28
33	1.6	1.5	0.2	1.8	1.3	38.09
32	0.2	0.4	0.3	0.6	-0.0	52.18

NODE	Vxx	Vyy
Cent	1.4	5.3
20	0.2	0.8
31	0.2	11.3
33	2.6	11.3
32	2.6	0.8

LC		NODE	Fxx	Fyy	Fxy	Fmax	Fmin	ANGLE
RC ENV~1	Max	Cent	0.6	2.3	0.6	2.5	0.4	71.81
		20	1.0	2.6	0.6	2.8	0.8	70.94
		31	1.0	3.0	0.6	3.1	0.7	82.29
		33	0.3	3.0	0.6	3.1	0.2	81.37
		32	0.3	2.6	0.6	2.7	0.0	76.30
	Min	Cent	-0.8	-0.8	-0.3	-0.5	-1.1	-44.88
		20	-1.2	-1.6	-0.3	-1.1	-1.8	-28.95
		31	-1.2	-1.0	-0.3	-0.2	-1.3	-5.82
		33	-0.4	-1.0	-0.3	-0.4	-1.0	-8.59
		32	-0.4	-1.6	-0.3	-0.3	-1.7	-12.46

NODE	Mxx	Myy	Mxy	Mmax	Mmin	ANGLE
Max Cent	1.3	4.1	1.3	4.6	0.8	69.10
20	0.2	3.6	1.0	3.9	-0.1	74.27
31	2.9	7.1	1.4	7.3	2.4	81.31
33	3.2	3.4	1.3	3.9	2.7	49.78
32	0.4	4.1	1.0	4.4	0.1	76.07
Min Cent	-0.2	-0.8	-0.9	0.5	-1.5	-36.51
20	-0.7	-0.0	-1.0	0.6	-1.4	-55.04
31	-1.2	-3.3	-0.9	-0.8	-3.4	-23.56
33	-0.0	0.4	-0.6	0.5	-0.0	78.82
32	-0.6	-2.1	-0.7	-0.3	-2.4	-22.31

NODE	Vxx	Vyy
Max Cent	0.4	6.1
20	1.5	3.5
31	1.5	11.6
33	-0.1	11.6
32	-0.1	3.5
Min Cent	-5.1	-4.4

		20	-5.5	-0.7			
		31	-5.5	-11.0			
		33	-5.3	-11.0			
		32	-5.3	-0.7			

LC		NODE	Fxx	Fyy	Fxy	Fmax	Fmin	ANGLE
RC ENV~2	Max	Cent	0.2	1.6	0.4	1.6	0.2	79.09
		20	0.3	1.5	0.4	1.6	0.0	80.07
		31	0.3	1.8	0.4	1.8	0.3	80.71
		33	0.0	1.8	0.4	1.8	0.0	79.41
		32	0.0	1.5	0.4	1.6	-0.1	77.80
	Min	Cent	-0.4	0.2	0.0	0.2	-0.5	74.65
		20	-0.7	-0.3	0.0	0.2	-0.7	41.77
		31	-0.7	0.8	0.0	0.8	-0.7	87.37
		33	-0.2	0.8	0.0	0.8	-0.3	88.51
		32	-0.2	-0.3	0.0	0.0	-0.3	3.79

	NODE	Mxx	Myy	Mxy	Mmax	Mmin	ANGLE
Max	Cent	0.7	2.4	0.5	2.5	0.6	75.27
	20	-0.1	2.4	0.3	2.4	-0.2	83.63
	31	1.4	3.4	0.6	3.5	1.3	76.96
	33	2.0	2.5	0.6	2.8	1.7	51.42
	32	0.0	2.0	0.3	2.0	0.0	80.22
Min	Cent	0.3	0.9	-0.2	1.0	0.2	-75.14
	20	-0.4	1.3	-0.3	1.3	-0.5	-78.21
	31	0.2	0.4	-0.1	0.5	0.1	-69.74
	33	1.2	1.6	0.0	1.7	1.1	64.73
	32	-0.3	0.1	-0.2	0.1	-0.3	-68.28

	NODE	Vxx	Vyy
Max	Cent	-1.5	2.2
	20	-0.8	2.2
	31	-0.8	3.1
	33	-2.0	3.1
	32	-2.0	2.2
Min	Cent	-3.2	-0.5
	20	-3.0	0.9
	31	-3.0	-2.7
	33	-3.5	-2.7
	32	-3.5	0.9

ELEM	MAT	SEC	LC		NODE	Fxx	Fyy	Fxy	Fmax	Fmin	ANGLE
26	1	1	SX (RS)		Cent	6.1	0.1	2.8	7.2	-1.0	21.32
					14	12.1	1.2	2.8	12.8	0.5	13.39
					51	12.1	1.1	2.8	12.8	0.4	13.27
					58	0.3	1.1	2.8	3.5	-2.1	48.88
					34	0.3	1.2	2.8	3.5	-2.0	49.46

	NODE	Mxx	Myy	Mxy	Mmax	Mmin	ANGLE
	Cent	9.1	1.3	1.4	9.4	1.0	9.88
	14	27.7	4.2	5.0	28.7	3.2	11.50
	51	6.8	2.4	1.6	7.3	1.9	17.80
	58	5.7	0.6	1.4	6.0	0.2	14.05
	34	3.6	1.0	5.2	7.6	-3.0	37.83

	NODE	Vxx	Vyy
	Cent	10.3	1.6
	14	36.9	2.0
	51	36.9	5.0
	58	16.3	5.0
	34	16.3	2.0

LC		NODE	Fxx	Fyy	Fxy	Fmax	Fmin	ANGLE
SY (RS)		Cent	0.8	2.7	3.0	4.9	-1.4	53.97
		14	1.7	7.2	3.0	8.5	0.4	66.53
		51	1.7	1.8	3.0	4.7	-1.2	45.84
		58	0.2	1.8	3.0	4.1	-2.1	52.82
		34	0.2	7.2	3.0	8.3	-0.9	69.92

	NODE	Mxx	Myy	Mxy	Mmax	Mmin	ANGLE
	Cent	1.9	4.0	1.8	5.1	0.8	60.04
	14	5.6	18.6	4.4	20.0	4.3	73.15
	51	1.3	5.0	4.5	8.0	-1.7	56.27
	58	0.8	1.1	0.5	1.5	0.4	53.60
	34	2.8	1.4	0.8	3.1	1.0	23.30

	NODE	Vxx	Vyy
	Cent	4.1	9.9
	14	3.5	30.4
	51	3.5	10.6
	58	5.0	10.6
	34	5.0	30.4

LC		NODE	Fxx	Fyy	Fxy	Fmax	Fmin	ANGLE
RC ENV~1	Max	Cent	6.8	2.0	2.4	7.4	-0.7	15.43
		14	13.2	5.2	2.4	13.5	1.2	8.69
		51	13.2	2.5	2.4	13.6	1.3	10.50
		58	0.7	2.5	2.4	4.2	0.6	-51.47
		34	0.7	5.2	2.4	6.2	-0.6	67.25
	Min	Cent	-5.4	-3.4	-3.5	0.7	-7.2	-44.82
		14	-11.1	-9.2	-3.5	-2.4	-12.3	-49.47
		51	-11.1	-1.2	-3.5	0.5	-12.0	-74.03
		58	-0.0	-1.2	-3.5	0.9	-4.1	72.67
		34	-0.0	-9.2	-3.5	0.5	-10.4	-8.93

	NODE	Mxx	Myy	Mxy	Mmax	Mmin	ANGLE
Max	Cent	12.9	8.5	0.3	12.9	6.6	-0.58
	14	37.3	31.5	4.4	38.2	23.1	11.70
	51	7.1	9.0	3.5	10.4	6.1	68.28
	58	7.4	3.1	-0.5	7.4	2.5	-5.58
	34	6.9	0.6	3.7	8.5	0.5	24.12
Min	Cent	-5.4	0.5	-3.3	4.1	-6.3	-73.07
	14	-18.0	-5.7	-5.6	6.1	-19.1	-22.64
	51	-6.4	-1.1	-5.5	2.3	-7.2	-73.64
	58	-4.0	0.8	-3.5	2.9	-5.5	-64.99
	34	-0.4	-2.2	-6.6	1.7	-7.7	-29.49

	NODE	Vxx	Vyy
Max	Cent	20.8	23.2
	14	50.4	52.9
	51	50.4	14.7
	58	20.0	14.7
	34	20.0	52.9
Min	Cent	-1.7	3.4
	14	-23.4	-7.9
	51	-23.4	-6.5
	58	-12.5	-6.5
	34	-12.5	-7.9

LC		NODE	Fxx	Fyy	Fxy	Fmax	Fmin	ANGLE
RC ENV~2	Max	Cent	3.7	-0.5	0.9	3.8	-0.6	8.69
		14	7.1	-1.1	0.9	7.1	-1.2	4.49
		51	7.1	1.4	0.9	7.1	0.7	5.74
		58	0.5	1.4	0.9	3.0	0.4	-51.60
		34	0.5	-1.1	0.9	1.3	-1.5	-22.65
	Min	Cent	-1.8	-1.2	-2.0	0.5	-3.3	-42.92
		14	-4.0	-3.7	-2.0	-1.6	-5.6	-46.58
		51	-4.0	0.0	-2.0	1.3	-4.5	-57.97
		58	0.2	0.0	-2.0	0.6	-1.1	48.85
		34	0.2	-3.7	-2.0	0.3	-4.3	-7.85

	NODE	Mxx	Myy	Mxy	Mmax	Mmin	ANGLE
Max	Cent	6.7	5.8	-1.2	7.5	4.8	-33.87
	14	20.1	18.3	1.1	20.5	17.2	20.37
	51	1.5	4.6	-0.5	5.3	0.8	-66.54
	58	2.9	2.3	-1.6	5.1	0.2	-40.47
	34	4.3	-0.5	-0.1	6.0	-1.2	-28.87
Min	Cent	-0.8	3.4	-2.3	4.4	-1.8	-66.35
	14	-2.2	9.5	-2.9	10.2	-2.9	-76.84

51	-3.2	2.8	-1.7	2.9	-3.3	-83.85
58	-1.6	1.7	-2.6	2.4	-2.5	-68.55
34	1.9	-1.4	-3.6	2.0	-2.6	-1.03

	NODE	Vxx	Vyy
Max	Cent	14.9	17.1
	14	29.3	30.6
	51	29.3	5.4
	58	10.8	5.4
	34	10.8	30.6
Min	Cent	4.4	11.4
	14	-1.1	20.2
	51	-1.1	1.9
	58	-0.2	1.9
	34	-0.2	20.2

ELEM	MAT	SEC	LC		NODE	Fxx	Fyy	Fxy	Fmax	Fmin	ANGLE
27	1	1	SX	(RS)	Cent	2.5	0.1	1.2	3.0	-0.4	22.07
					15	5.8	0.5	1.2	6.1	0.2	11.92
					73	5.8	0.4	1.2	6.1	0.1	11.70
					80	0.9	0.4	1.2	1.8	-0.6	39.13
					65	0.9	0.5	1.2	1.9	-0.5	40.44

	NODE	Mxx	Myy	Mxy	Mmax	Mmin	ANGLE
	Cent	4.5	1.1	0.9	4.8	0.9	14.59
	15	17.9	3.6	3.3	18.6	2.8	12.48
	73	2.1	2.0	1.0	3.1	1.0	42.94
	80	1.8	0.2	0.8	2.2	-0.1	22.95
	65	3.7	0.7	3.5	6.1	-1.6	33.61

	NODE	Vxx	Vyy
	Cent	9.0	1.9
	15	27.7	0.0
	73	27.7	3.8
	80	9.7	3.8
	65	9.7	0.0

LC		NODE	Fxx	Fyy	Fxy	Fmax	Fmin	ANGLE
SY	(RS)	Cent	2.5	3.4	3.4	6.4	-0.4	48.77
		15	2.0	9.3	3.4	10.6	0.6	68.80
		73	2.0	2.5	3.4	5.6	-1.1	47.44
		80	3.4	2.5	3.4	6.4	-0.4	41.16
		65	3.4	9.3	3.4	10.8	1.9	65.59

	NODE	Mxx	Myy	Mxy	Mmax	Mmin	ANGLE
	Cent	5.7	8.9	2.4	10.2	4.5	61.91
	15	12.6	37.9	7.2	39.8	10.7	75.16
	73	1.2	8.5	7.9	13.5	-3.8	57.53
	80	2.7	3.0	1.0	3.9	1.8	49.84
	65	8.2	3.3	1.6	8.7	2.8	17.01

	NODE	Vxx	Vyy
	Cent	8.5	20.6
	15	6.8	61.0
	73	6.8	19.9
	80	10.2	19.9
	65	10.2	61.0

LC		NODE	Fxx	Fyy	Fxy	Fmax	Fmin	ANGLE
RC ENV~1	Max	Cent	2.6	2.9	2.7	5.5	-0.0	46.57
		15	5.7	7.6	2.7	8.7	0.7	68.42
		73	5.7	3.1	2.7	5.7	0.9	6.62
		80	3.7	3.1	2.7	6.2	0.7	42.08
		65	3.7	7.6	2.7	9.0	2.3	62.93
	Min	Cent	-2.5	-3.9	-4.0	0.5	-7.3	-58.51
		15	-6.0	-11.0	-4.0	-1.4	-12.5	-68.27
		73	-6.0	-1.9	-4.0	0.7	-6.4	-74.89
		80	-3.2	-1.9	-4.0	0.6	-6.6	-67.11

		65	-3.2	-11.0	-4.0	-1.5	-12.6	-22.80

	NODE	Mxx	Myy	Mxy	Mmax	Mmin	ANGLE
Max	Cent	10.2	14.4	1.9	15.0	8.1	73.27
	15	30.5	55.6	8.2	57.7	27.6	75.89
	73	0.8	10.3	8.6	14.5	0.4	64.11
	80	7.9	6.2	0.0	10.7	3.5	-35.11
	65	11.2	2.8	2.8	11.5	2.7	-22.52
Min	Cent	-2.8	-3.4	-3.2	-0.2	-6.0	-41.87
	15	-5.3	-20.1	-6.2	1.8	-21.9	-15.90
	73	-6.6	-6.8	-7.1	-0.2	-13.4	-87.85
	80	-1.8	0.1	-4.0	1.3	-3.1	-58.14
	65	-5.2	-3.9	-4.9	-2.0	-7.1	-52.82

	NODE	Vxx	Vyy
Max	Cent	24.1	35.1
	15	52.7	90.7
	73	52.7	19.3
	80	15.4	19.3
	65	15.4	90.7
Min	Cent	6.0	-6.0
	15	-2.8	-31.3
	73	-2.8	-20.5
	80	-5.1	-20.5
	65	-5.1	-31.3

LC		NODE	Fxx	Fyy	Fxy	Fmax	Fmin	ANGLE
RC ENV~2	Max	Cent	1.1	-0.5	-0.2	1.2	-0.5	-12.88
		15	1.9	-1.4	-0.2	1.9	-1.4	-3.16
		73	1.9	1.1	-0.2	2.0	0.5	-17.81
		80	0.7	1.1	-0.2	2.2	0.1	-49.64
		65	0.7	-1.4	-0.2	1.1	-1.4	-17.07
	Min	Cent	-0.5	-0.9	-1.3	0.4	-1.9	-36.16
		15	-1.6	-3.0	-1.3	-0.8	-3.6	-34.71
		73	-1.6	0.4	-1.3	1.0	-2.1	-60.41
		80	0.2	0.4	-1.3	0.5	-0.4	-61.73
		65	0.2	-3.0	-1.3	0.2	-3.4	-6.54

	NODE	Mxx	Myy	Mxy	Mmax	Mmin	ANGLE
Max	Cent	7.1	7.4	-0.4	8.7	5.9	-42.49
	15	20.3	24.2	1.3	24.5	20.0	76.12
	73	-0.3	2.7	0.9	2.9	-0.4	-77.64
	80	5.2	4.0	-0.9	7.2	1.8	-37.63
	65	6.7	-0.1	-0.6	7.9	-0.7	-21.76
Min	Cent	2.7	5.2	-2.1	5.5	2.1	-79.59
	15	7.0	16.1	-1.3	16.2	6.9	-84.00
	73	-4.7	1.4	-0.7	1.5	-4.8	83.43
	80	0.7	3.1	-2.7	3.4	0.4	-71.66
	65	2.8	-0.8	-3.2	2.9	-1.5	-9.63

	NODE	Vxx	Vyy
Max	Cent	17.9	19.3
	15	32.2	39.9
	73	32.2	0.7
	80	7.4	0.7
	65	7.4	39.9
Min	Cent	8.7	13.7
	15	12.7	28.7
	73	12.7	-2.4
	80	1.0	-2.4
	65	1.0	28.7

ELEM	MAT	SEC	LC		NODE	Fxx	Fyy	Fxy	Fmax	Fmin	ANGLE
28	1	1	SX (RS)		Cent	3.1	0.1	2.5	4.5	-1.3	29.91
					16	8.9	0.7	2.5	9.6	0.0	15.84
					36	8.9	0.5	2.5	9.6	-0.2	15.48
					38	2.8	0.5	2.5	4.4	-1.1	32.86
					37	2.8	0.7	2.5	4.5	-1.0	34.00

	NODE	Mxx	Myy	Mxy	Mmax	Mmin	ANGLE

Cent	5.6	2.6	0.9	5.9	2.3	15.95
16	26.4	6.6	4.4	27.3	5.7	11.94
36	1.9	4.6	2.4	6.0	0.5	60.15
38	1.7	0.4	1.8	3.0	-0.8	35.02
37	7.6	1.2	4.9	10.3	-1.4	28.45

NODE	Vxx	Vyy
Cent	13.8	4.8
16	43.7	2.0
36	43.7	7.7
38	16.2	7.7
37	16.2	2.0

LC		NODE	Fxx	Fyy	Fxy	Fmax	Fmin	ANGLE
SY (RS)		Cent	0.2	2.6	2.0	3.7	-0.9	60.13
		16	0.9	7.1	2.0	7.7	0.3	73.52
		36	0.9	2.0	2.0	3.5	-0.6	52.51
		38	0.4	2.0	2.0	3.4	-0.9	55.59
		37	0.4	7.1	2.0	7.7	-0.1	74.48

	NODE	Mxx	Myy	Mxy	Mmax	Mmin	ANGLE
	Cent	1.8	3.9	0.7	4.1	1.6	73.65
	16	5.0	18.5	3.2	19.2	4.3	77.34
	36	1.0	5.3	3.5	7.2	-1.0	61.03
	38	0.2	1.2	1.2	2.0	-0.6	56.28
	37	3.2	1.5	1.6	4.1	0.5	30.83

NODE	Vxx	Vyy
Cent	3.6	9.6
16	3.2	30.4
36	3.2	11.3
38	5.4	11.3
37	5.4	30.4

LC		NODE	Fxx	Fyy	Fxy	Fmax	Fmin	ANGLE
RC ENV~1	Max	Cent	2.8	1.9	1.4	3.3	-0.4	20.11
		16	7.7	4.7	1.4	7.9	-0.4	8.31
		36	7.7	3.1	1.4	8.0	1.3	12.34
		38	3.4	3.1	1.4	5.7	0.8	-41.67
		37	3.4	4.7	1.4	4.9	0.8	76.75
	Min	Cent	-3.4	-3.3	-3.6	0.8	-5.9	-24.76
		16	-10.1	-9.6	-3.6	-2.3	-11.6	-49.51
		36	-10.1	-0.9	-3.6	1.6	-11.2	-50.39
		38	-2.2	-0.9	-3.6	1.2	-4.7	-84.92
		37	-2.2	-9.6	-3.6	-0.5	-10.5	-3.74

	NODE	Mxx	Myy	Mxy	Mmax	Mmin	ANGLE
Max	Cent	13.0	9.6	-0.3	13.8	8.5	-21.93
	16	40.3	34.0	4.5	41.4	29.3	13.09
	36	1.4	7.6	3.0	8.7	0.8	69.81
	38	6.3	4.5	-0.0	9.3	2.9	-39.53
	37	12.9	0.7	3.6	14.1	0.7	-15.81
Min	Cent	-0.3	0.9	-2.6	3.5	-1.6	-60.41
	16	-12.4	-3.1	-4.3	9.7	-13.2	-13.56
	36	-2.4	-3.0	-3.9	0.4	-6.2	-45.37
	38	1.1	1.3	-4.0	4.0	-2.1	-58.82
	37	-2.8	-2.2	-6.2	3.2	-8.6	-28.02

	NODE	Vxx	Vyy
Max	Cent	32.1	25.3
	16	65.1	56.4
	36	65.1	12.2
	38	21.1	12.2
	37	21.1	56.4
Min	Cent	-0.6	3.9
	16	-22.2	-4.4
	36	-22.2	-10.4
	38	-11.3	-10.4
	37	-11.3	-4.4

LC		NODE	Fxx	Fyy	Fxy	Fmax	Fmin	ANGLE
RC ENV~2	Max	Cent	0.9	-0.6	-0.2	1.2	-0.7	-46.62
		16	2.0	-2.2	-0.2	2.0	-2.3	-3.25
		36	2.0	1.7	-0.2	2.5	0.9	-70.94
		38	1.9	1.7	-0.2	4.1	-0.2	-42.32
		37	1.9	-2.2	-0.2	2.8	-2.3	-21.83
	Min	Cent	-1.7	-1.1	-2.4	0.6	-3.7	-35.31
		16	-5.3	-3.8	-2.4	-1.7	-6.9	-47.97
		36	-5.3	0.9	-2.4	1.4	-6.1	-56.15
		38	-0.3	0.9	-2.4	1.0	-0.7	-79.07
		37	-0.3	-3.8	-2.4	-0.3	-4.6	-6.99

	NODE	Mxx	Myy	Mxy	Mmax	Mmin	ANGLE
Max	Cent	9.3	7.0	-1.0	9.9	6.1	-23.85
	16	27.2	21.8	1.7	27.6	21.5	12.66
	36	0.4	4.5	0.1	5.0	-0.0	-72.48
	38	4.5	3.3	-1.5	6.7	1.4	-39.94
	37	9.2	-0.5	0.6	10.0	-1.0	-15.80
Min	Cent	5.0	4.7	-1.9	6.2	3.3	-42.67
	16	9.5	15.2	-1.2	15.2	9.2	-86.66
	36	-1.1	1.4	-1.5	1.5	-1.1	87.80
	38	2.7	2.5	-2.9	4.3	0.7	-42.82
	37	3.3	-1.3	-3.0	3.4	-1.4	7.55

	NODE	Vxx	Vyy
Max	Cent	22.8	18.5
	16	43.0	35.2
	36	43.0	4.5
	38	11.8	4.5
	37	11.8	35.2
Min	Cent	12.4	13.3
	16	13.9	25.8
	36	13.9	-1.1
	38	0.4	-1.1
	37	0.4	25.8

ELEM	MAT	SEC	LC		NODE	Fxx	Fyy	Fxy	Fmax	Fmin	ANGLE
29	1	1	SX (RS)		Cent	0.2	0.3	0.6	0.9	-0.4	47.01
					1	0.9	1.3	0.6	1.7	0.4	53.72
					41	0.9	0.7	0.6	1.4	0.2	40.22
					43	0.5	0.7	0.6	1.2	-0.1	49.47
					42	0.5	1.3	0.6	1.6	0.1	61.30

	NODE	Mxx	Myy	Mxy	Mmax	Mmin	ANGLE
	Cent	0.4	0.8	0.5	1.2	0.1	56.30
	1	0.4	0.5	0.5	1.0	-0.1	48.11
	41	0.4	0.3	0.4	0.8	-0.0	40.11
	43	1.4	2.2	0.4	2.3	1.3	68.55
	42	0.0	0.9	0.5	1.1	-0.2	65.75

	NODE	Vxx	Vyy
	Cent	0.6	2.3
	1	1.1	0.8
	41	1.1	3.9
	43	2.0	3.9
	42	2.0	0.8

LC		NODE	Fxx	Fyy	Fxy	Fmax	Fmin	ANGLE
SY (RS)		Cent	0.3	0.2	0.5	0.7	-0.3	42.49
		1	1.0	0.7	0.5	1.4	0.3	35.67
		41	1.0	0.5	0.5	1.3	0.2	30.09
		43	0.5	0.5	0.5	1.0	-0.0	42.81
		42	0.5	0.7	0.5	1.1	0.1	49.51

	NODE	Mxx	Myy	Mxy	Mmax	Mmin	ANGLE
	Cent	0.6	0.3	0.3	0.8	0.1	33.26
	1	0.4	0.3	0.4	0.7	-0.1	41.53
	41	0.6	0.0	0.3	0.7	-0.1	24.73

		43	1.5	1.0	0.2	1.6	0.9	20.54
		42	0.2	0.2	0.3	0.5	-0.0	46.33

	NODE	Vxx	Vyy
	Cent	1.6	0.4
	1	0.5	0.7
	41	0.5	1.4
	43	2.6	1.4
	42	2.6	0.7

LC		NODE	Fxx	Fyy	Fxy	Fmax	Fmin	ANGLE
RC ENV~1	Max	Cent	0.4	0.5	0.3	1.2	0.1	-46.79
		1	1.6	1.8	0.3	2.3	1.2	-48.59
		41	1.6	0.5	0.3	1.7	0.4	-19.34
		43	0.3	0.5	0.3	0.8	0.1	56.16
		42	0.3	1.8	0.3	1.9	0.2	78.00
	Min	Cent	-0.1	-0.1	-0.9	0.1	-1.0	-2.29
		1	-0.5	-0.8	-0.9	0.2	-1.5	-0.27
		41	-0.5	-0.8	-0.9	0.2	-1.5	-86.09
		43	-0.8	-0.8	-0.9	0.1	-1.7	-44.33
		42	-0.8	-0.8	-0.9	-0.0	-1.7	-0.89

		NODE	Mxx	Myy	Mxy	Mmax	Mmin	ANGLE
	Max	Cent	1.9	2.0	-0.2	3.4	1.4	-45.38
		1	1.4	1.4	0.0	2.6	1.1	-45.11
		41	2.9	0.2	-0.3	3.4	0.1	-20.47
		43	4.2	4.3	-0.4	5.8	3.3	-45.57
		42	0.0	2.5	-0.2	3.1	-0.1	-67.48
	Min	Cent	0.5	0.2	-1.5	1.6	-0.8	-39.56
		1	0.3	0.1	-1.2	1.2	-0.9	-35.49
		41	0.9	-0.4	-1.4	1.5	-1.0	-31.23
		43	0.7	-0.1	-1.6	1.6	-0.9	-34.78
		42	-0.4	0.4	-1.4	1.3	-1.1	-52.81

		NODE	Vxx	Vyy
	Max	Cent	-1.2	-0.3
		1	-0.6	-0.7
		41	-0.6	0.2
		43	-1.3	0.2
		42	-1.3	-0.7
	Min	Cent	-5.2	-5.1
		1	-3.4	-2.6
		41	-3.4	-7.6
		43	-7.5	-7.6
		42	-7.5	-2.6

LC		NODE	Fxx	Fyy	Fxy	Fmax	Fmin	ANGLE
RC ENV~2	Max	Cent	0.3	0.3	-0.0	0.9	0.0	-46.74
		1	1.0	1.1	-0.0	1.6	0.5	-48.21
		41	1.0	0.1	-0.0	1.2	0.1	-19.34
		43	-0.0	0.1	-0.0	0.1	-0.1	-66.00
		42	-0.0	1.1	-0.0	1.3	-0.1	-72.01
	Min	Cent	0.1	0.1	-0.6	0.1	-0.3	-36.52
		1	0.2	-0.0	-0.6	0.2	-0.0	-9.34
		41	0.2	-0.5	-0.6	0.2	-0.7	-22.27
		43	-0.5	-0.5	-0.6	0.1	-1.1	-44.70
		42	-0.5	-0.0	-0.6	0.0	-0.7	-56.07

		NODE	Mxx	Myy	Mxy	Mmax	Mmin	ANGLE
	Max	Cent	1.4	1.4	-0.7	2.5	0.3	-45.27
		1	1.0	1.0	-0.5	1.9	0.2	-45.07
		41	2.1	-0.1	-0.7	2.5	-0.3	-20.41
		43	3.1	3.1	-0.8	4.3	1.9	-45.38
		42	-0.2	1.8	-0.6	2.3	-0.4	-67.67
	Min	Cent	1.0	0.9	-1.1	1.7	0.3	-43.25
		1	0.7	0.7	-0.8	1.2	0.1	-44.24
		41	1.3	-0.2	-1.0	1.7	-0.6	-20.60
		43	2.1	1.7	-1.2	2.9	1.0	-42.26
		42	-0.3	1.3	-1.0	1.5	-0.6	-69.32

	NODE	Vxx	Vyy

Max	Cent	-2.8	-2.3
	1	-1.3	-1.4
	41	-1.3	-3.1
	43	-3.9	-3.1
	42	-3.9	-1.4
Min	Cent	-3.8	-3.7
	1	-2.5	-1.9
	41	-2.5	-5.6
	43	-5.5	-5.6
	42	-5.5	-1.9

ELEM	MAT	SEC	LC		NODE	Fxx	Fyy	Fxy	Fmax	Fmin	ANGLE
30	1	1	SX (RS)		Cent	1.0	0.1	0.3	1.0	0.1	16.15
					28	1.8	0.1	0.3	1.8	0.0	8.60
					94	1.8	0.4	0.3	1.8	0.3	10.22
					101	0.3	0.4	0.3	0.6	0.1	47.60
					44	0.3	0.1	0.3	0.5	-0.1	32.79

	NODE	Mxx	Myy	Mxy	Mmax	Mmin	ANGLE
	Cent	2.8	0.1	0.3	2.8	0.1	6.06
	28	4.4	0.5	0.9	4.6	0.3	11.71
	94	4.0	0.3	0.5	4.1	0.2	7.50
	101	6.1	1.4	0.5	6.1	1.3	6.02
	44	3.7	1.3	0.9	4.0	1.0	17.91

	NODE	Vxx	Vyy
	Cent	8.0	1.0
	28	0.8	0.3
	94	0.8	2.2
	101	16.3	2.2
	44	16.3	0.3

LC		NODE	Fxx	Fyy	Fxy	Fmax	Fmin	ANGLE
SY (RS)		Cent	1.0	0.6	0.7	1.5	0.1	37.99
		28	1.4	1.0	0.7	1.9	0.5	38.59
		94	1.4	0.2	0.7	1.7	-0.1	25.36
		101	0.6	0.2	0.7	1.1	-0.3	37.41
		44	0.6	1.0	0.7	1.6	0.1	53.84

	NODE	Mxx	Myy	Mxy	Mmax	Mmin	ANGLE
	Cent	1.5	0.5	0.6	1.8	0.3	24.42
	28	2.4	0.2	0.5	2.5	0.1	11.95
	94	0.8	0.1	0.7	1.2	-0.3	32.52
	101	0.8	0.7	0.6	1.4	0.1	43.71
	44	2.8	1.4	0.4	2.9	1.3	16.29

	NODE	Vxx	Vyy
	Cent	3.8	1.9
	28	3.0	2.6
	94	3.0	1.3
	101	5.0	1.3
	44	5.0	2.6

LC		NODE	Fxx	Fyy	Fxy	Fmax	Fmin	ANGLE
RC ENV~1	Max	Cent	1.7	0.5	0.9	2.2	-0.0	28.25
		28	2.7	0.7	0.9	2.8	0.3	8.65
		94	2.7	0.4	0.9	2.8	0.3	10.81
		101	1.0	0.4	0.9	1.6	0.3	33.16
		44	1.0	0.7	0.9	1.8	-0.0	40.11
	Min	Cent	-0.3	-0.8	-0.5	-0.2	-1.1	-36.80
		28	-0.8	-1.4	-0.5	-0.4	-1.6	-81.74
		94	-0.8	-0.3	-0.5	-0.3	-0.8	-82.96
		101	-0.1	-0.3	-0.5	0.1	-0.7	-6.89
		44	-0.1	-1.4	-0.5	0.0	-1.5	-19.89

	NODE	Mxx	Myy	Mxy	Mmax	Mmin	ANGLE
Max	Cent	7.2	1.4	0.7	7.2	1.4	-1.22

		28	8.6	0.1	0.7	8.6	0.0	-1.53
		94	6.1	0.2	0.8	6.2	0.1	6.23
		101	9.0	3.8	1.0	9.2	3.8	8.69
		44	9.6	3.1	0.9	9.6	3.1	-4.19
	Min	Cent	0.6	0.2	-0.4	0.8	0.1	-50.65
		28	-1.0	-0.8	-1.1	0.1	-2.0	-46.94
		94	-1.9	-0.4	-0.5	-0.3	-2.0	-77.80
		101	-3.1	0.5	-0.2	0.5	-3.1	-88.41
		44	1.4	0.3	-0.8	1.9	-0.1	-29.44

		NODE	Vxx	Vyy
	Max	Cent	11.2	-1.3
		28	6.7	-0.6
		94	6.7	-1.2
		101	20.2	-1.2
		44	20.2	-0.6
	Min	Cent	-4.7	-5.8
		28	-0.5	-5.7
		94	-0.5	-6.5
		101	-12.4	-6.5
		44	-12.4	-5.7

LC		NODE	Fxx	Fyy	Fxy	Fmax	Fmin	ANGLE
RC ENV~2	Max	Cent	1.2	-0.1	0.4	1.2	-0.1	8.88
		28	1.8	-0.3	0.4	1.8	-0.3	5.51
		94	1.8	0.2	0.4	1.8	0.2	7.51
		101	0.7	0.2	0.4	0.9	0.2	21.72
		44	0.7	-0.3	0.4	0.8	-0.3	15.78
	Min	Cent	0.5	-0.3	0.1	0.6	-0.4	21.47
		28	0.4	-0.5	0.1	0.5	-0.6	20.59
		94	0.4	-0.1	0.1	0.6	-0.3	24.63
		101	0.4	-0.1	0.1	0.4	-0.3	21.02
		44	0.4	-0.5	0.1	0.4	-0.6	6.13

		NODE	Mxx	Myy	Mxy	Mmax	Mmin	ANGLE
	Max	Cent	5.2	1.0	0.1	5.2	1.0	-0.83
		28	6.2	-0.2	-0.1	6.2	-0.2	-1.58
		94	3.8	-0.0	0.3	3.8	-0.1	-2.39
		101	5.6	2.8	0.5	5.6	2.8	3.17
		44	7.1	2.3	0.2	7.1	2.3	-3.67
	Min	Cent	2.4	0.7	-0.1	2.4	0.7	2.98
		28	2.0	-0.5	-0.6	2.1	-0.7	-10.75
		94	0.7	-0.2	-0.2	0.7	-0.2	14.55
		101	0.9	1.5	0.2	1.8	0.6	59.45
		44	4.8	1.5	-0.3	4.8	1.5	3.95

		NODE	Vxx	Vyy
	Max	Cent	6.6	-2.9
		28	4.8	-3.1
		94	4.8	-2.6
		101	10.1	-2.6
		44	10.1	-3.1
	Min	Cent	1.3	-4.3
		28	2.4	-4.0
		94	2.4	-4.8
		101	-1.0	-4.8
		44	-1.0	-4.0

ELEM	MAT	SEC	LC		NODE	Fxx	Fyy	Fxy	Fmax	Fmin	ANGLE
31	1	1	SX (RS)		Cent	0.4	0.1	0.2	0.5	0.0	22.46
					29	0.2	0.1	0.2	0.3	-0.0	35.34
					116	0.2	0.3	0.2	0.4	0.1	51.28
					123	0.9	0.3	0.2	0.9	0.2	14.71
					108	0.9	0.1	0.2	0.9	0.1	11.54

		NODE	Mxx	Myy	Mxy	Mmax	Mmin	ANGLE
		Cent	0.1	0.1	0.2	0.3	-0.1	43.96
		29	1.7	0.3	0.4	1.8	0.2	14.21
		116	0.4	0.2	0.4	0.8	-0.1	39.73
		123	2.1	1.0	0.4	2.2	0.9	18.28
		108	3.7	0.7	0.4	3.8	0.7	8.02

	NODE	Vxx	Vyy
	Cent	3.8	0.8
	29	2.1	0.0
	116	2.1	1.6
	123	9.8	1.6
	108	9.8	0.0

LC		NODE	Fxx	Fyy	Fxy	Fmax	Fmin	ANGLE
SY (RS)		Cent	4.7	0.8	0.8	4.8	0.6	10.74
		29	5.7	1.3	0.8	5.8	1.2	9.77
		116	5.7	0.2	0.8	5.8	0.1	7.92
		123	3.7	0.2	0.8	3.9	0.1	11.95
		108	3.7	1.3	0.8	4.0	1.1	16.42

	NODE	Mxx	Myy	Mxy	Mmax	Mmin	ANGLE
	Cent	5.4	1.4	0.3	5.4	1.3	3.67
	29	6.1	0.4	0.2	6.1	0.4	2.13
	116	5.0	0.6	0.2	5.0	0.6	2.15
	123	2.5	1.9	0.2	2.5	1.8	13.26
	108	8.2	3.4	0.4	8.3	3.3	4.55

	NODE	Vxx	Vyy
	Cent	6.3	4.6
	29	2.4	6.0
	116	2.4	3.3
	123	10.2	3.3
	108	10.2	6.0

LC		NODE	Fxx	Fyy	Fxy	Fmax	Fmin	ANGLE
RC ENV~1	Max	Cent	5.2	0.6	0.9	5.4	0.5	11.08
		29	6.4	1.1	0.9	6.5	0.9	9.71
		116	6.4	0.3	0.9	6.5	0.1	8.43
		123	4.1	0.3	0.9	4.3	0.2	12.90
		108	4.1	1.1	0.9	4.3	0.8	15.95
	Min	Cent	-4.2	-0.9	-0.6	-0.8	-4.3	-79.72
		29	-5.0	-1.6	-0.6	-1.5	-5.1	-80.13
		116	-5.0	-0.3	-0.6	-0.1	-5.1	-82.74
		123	-3.4	-0.3	-0.6	-0.3	-3.5	-87.21
		108	-3.4	-1.6	-0.6	-1.4	-3.6	-72.83

	NODE	Mxx	Myy	Mxy	Mmax	Mmin	ANGLE
Max	Cent	8.9	2.5	0.8	8.9	2.4	6.20
	29	9.8	-0.1	0.4	9.8	-0.1	1.72
	116	7.0	0.7	0.8	7.0	0.6	4.92
	123	5.8	4.3	1.4	6.5	3.7	29.23
	108	13.9	5.6	0.9	14.0	5.6	5.71
Min	Cent	-1.9	-0.3	0.2	-0.2	-2.0	83.85
	29	-2.5	-1.0	-0.3	-0.9	-2.5	-85.35
	116	-2.9	-0.5	-0.1	-0.5	-3.0	84.92
	123	-0.0	0.6	0.4	1.0	-0.4	59.21
	108	-2.5	-1.1	0.0	-1.1	-2.5	87.67

	NODE	Vxx	Vyy
Max	Cent	10.8	0.4
	29	6.1	1.7
	116	6.1	-0.9
	123	16.1	-0.9
	108	16.1	1.7
Min	Cent	-1.8	-8.9
	29	0.7	-10.2
	116	0.7	-7.5
	123	-4.3	-7.5
	108	-4.3	-10.2

LC		NODE	Fxx	Fyy	Fxy	Fmax	Fmin	ANGLE
RC ENV~2	Max	Cent	1.0	-0.1	0.3	1.0	-0.1	11.69
		29	1.2	-0.2	0.3	1.3	-0.2	8.58

		116	1.2	0.1	0.3	1.3	0.0	11.51
		123	0.7	0.1	0.3	0.8	-0.0	16.50
		108	0.7	-0.2	0.3	0.8	-0.2	12.30
	Min	Cent	0.4	-0.2	0.1	0.5	-0.3	14.63
		29	0.6	-0.4	0.1	0.7	-0.4	9.07
		116	0.6	-0.1	0.1	0.7	-0.1	10.94
		123	0.2	-0.1	0.1	0.3	-0.1	37.42
		108	0.2	-0.4	0.1	0.2	-0.5	17.77

	NODE	Mxx	Myy	Mxy	Mmax	Mmin	ANGLE
Max	Cent	5.2	1.3	0.6	5.3	1.2	8.05
	29	5.7	-0.4	0.2	5.8	-0.4	1.49
	116	3.4	0.1	0.5	3.5	0.1	7.23
	123	4.2	3.2	1.0	4.7	2.6	30.81
	108	8.7	2.8	0.7	8.7	2.8	4.54
Min	Cent	3.4	1.1	0.4	3.5	1.0	10.32
	29	3.4	-0.7	-0.1	3.4	-0.7	-1.86
	116	1.8	0.0	0.3	1.9	-0.0	13.58
	123	1.9	2.3	0.7	2.9	1.3	50.57
	108	5.0	2.1	0.2	5.1	2.0	10.69

	NODE	Vxx	Vyy
Max	Cent	6.7	-4.1
	29	4.4	-4.3
	116	4.4	-3.8
	123	9.8	-3.8
	108	9.8	-4.3
Min	Cent	3.7	-5.2
	29	3.0	-5.1
	116	3.0	-5.3
	123	3.3	-5.3
	108	3.3	-5.1

ELEM	MAT	SEC	LC		NODE	Fxx	Fyy	Fxy	Fmax	Fmin	ANGLE
32	1	1	SX	(RS)	Cent	1.4	0.2	0.3	1.5	0.1	13.46
					30	0.2	0.0	0.3	0.5	-0.2	36.04
					46	0.2	0.4	0.3	0.7	0.0	53.73
					48	2.7	0.4	0.3	2.8	0.4	7.60
					47	2.7	0.0	0.3	2.8	0.0	6.52

	NODE	Mxx	Myy	Mxy	Mmax	Mmin	ANGLE
	Cent	1.5	0.4	0.3	1.6	0.3	13.55
	30	0.5	0.5	0.8	1.3	-0.3	43.43
	46	0.8	0.3	0.5	1.1	0.0	31.44
	48	2.1	2.3	0.4	2.6	1.8	53.34
	47	7.6	1.0	1.0	7.8	0.8	8.30

	NODE	Vxx	Vyy
	Cent	7.7	2.1
	30	1.0	0.3
	46	1.0	3.9
	48	16.3	3.9
	47	16.3	0.3

LC		NODE	Fxx	Fyy	Fxy	Fmax	Fmin	ANGLE
SY	(RS)	Cent	1.3	0.6	0.4	1.5	0.4	24.59
		30	1.7	1.0	0.4	1.9	0.8	22.63
		46	1.7	0.3	0.4	1.8	0.2	13.71
		48	0.8	0.3	0.4	1.0	0.1	26.68
		47	0.8	1.0	0.4	1.3	0.5	50.45

	NODE	Mxx	Myy	Mxy	Mmax	Mmin	ANGLE
	Cent	1.6	0.5	0.8	2.0	0.2	27.00
	30	1.2	0.3	0.7	1.6	-0.0	29.22
	46	2.1	0.3	0.6	2.3	0.2	17.07
	48	0.1	0.7	0.7	1.1	-0.3	56.95
	47	3.2	1.5	0.8	3.5	1.2	20.78

	NODE	Vxx	Vyy

		Cent	2.0	2.0
		30	1.5	2.6
		46	1.5	1.4
		48	5.4	1.4
		47	5.4	2.6

LC		NODE	Fxx	Fyy	Fxy	Fmax	Fmin	ANGLE
RC ENV~1	Max	Cent	2.2	0.4	0.6	2.3	0.2	13.04
		30	2.5	0.7	0.6	2.7	0.5	16.43
		46	2.5	0.4	0.6	2.7	0.2	13.70
		48	3.5	0.4	0.6	3.5	0.3	9.52
		47	3.5	0.7	0.6	3.5	0.4	7.91
	Min	Cent	-0.7	-0.8	-0.2	-0.4	-0.9	-26.54
		30	-1.0	-1.3	-0.2	-0.9	-1.4	-23.02
		46	-1.0	-0.5	-0.2	-0.3	-1.0	-76.23
		48	-2.0	-0.5	-0.2	-0.5	-2.0	-86.38
		47	-2.0	-1.3	-0.2	-0.4	-2.0	70.60

		NODE	Mxx	Myy	Mxy	Mmax	Mmin	ANGLE
	Max	Cent	6.1	1.5	1.6	6.6	0.9	16.96
		30	4.7	-0.0	1.3	4.9	-0.5	13.37
		46	5.3	0.5	1.6	5.8	0.1	16.08
		48	5.1	4.4	2.1	6.6	3.1	39.16
		47	12.4	3.0	2.0	12.7	2.7	10.21
	Min	Cent	1.6	0.3	0.1	1.6	0.2	2.35
		30	1.6	-1.0	-0.3	1.6	-1.2	-4.21
		46	0.6	-0.2	0.1	0.6	-0.2	7.32
		48	0.4	-0.3	0.4	0.8	-0.7	31.45
		47	-2.9	0.1	-0.1	0.6	-2.9	-87.59

		NODE	Vxx	Vyy
	Max	Cent	10.0	-1.2
		30	1.9	-0.4
		46	1.9	0.3
		48	20.6	0.3
		47	20.6	-0.4
	Min	Cent	-5.3	-6.1
		30	-1.1	-5.6
		46	-1.1	-7.5
		48	-12.0	-7.5
		47	-12.0	-5.6

LC		NODE	Fxx	Fyy	Fxy	Fmax	Fmin	ANGLE
RC ENV~2	Max	Cent	1.4	-0.1	0.4	1.5	-0.1	12.18
		30	1.2	-0.2	0.4	1.2	-0.3	8.60
		46	1.2	0.1	0.4	1.2	0.1	12.06
		48	1.9	0.1	0.4	1.9	-0.1	9.46
		47	1.9	-0.2	0.4	1.9	-0.3	9.10
	Min	Cent	0.2	-0.3	0.1	0.3	-0.4	15.54
		30	0.6	-0.5	0.1	0.7	-0.5	15.05
		46	0.6	-0.2	0.1	0.7	-0.3	16.34
		48	-0.3	-0.2	0.1	0.2	-0.3	78.97
		47	-0.3	-0.5	0.1	-0.2	-0.5	47.73

		NODE	Mxx	Myy	Mxy	Mmax	Mmin	ANGLE
	Max	Cent	4.5	1.1	1.2	4.9	0.6	16.98
		30	3.5	-0.3	1.0	3.7	-0.5	12.90
		46	3.9	0.3	1.1	4.2	-0.0	15.92
		48	3.7	3.1	1.6	4.8	2.1	39.25
		47	8.2	2.1	1.4	8.3	2.0	7.30
	Min	Cent	2.8	0.7	0.8	3.1	0.5	21.43
		30	2.8	-0.8	0.3	2.9	-0.8	7.73
		46	2.6	0.0	0.6	2.8	-0.1	12.54
		48	2.2	1.5	1.0	3.1	0.6	37.17
		47	2.3	1.2	0.6	3.0	0.4	32.34

		NODE	Vxx	Vyy
	Max	Cent	5.0	-2.8
		30	0.6	-3.0
		46	0.6	-2.7
		48	10.2	-2.7

					47	10.2	-3.0				
				Min	Cent	-0.3	-4.5				
					30	-0.3	-3.6				
					46	-0.3	-5.4				
					48	-1.2	-5.4				
					47	-1.2	-3.6				

ELEM	MAT	SEC	LC		NODE	Fxx	Fyy	Fxy	Fmax	Fmin	ANGLE
33	1	1	SX (RS)		Cent	0.7	1.3	0.8	1.9	0.2	54.72
					17	1.2	1.7	0.8	2.3	0.6	54.29
					45	1.2	0.9	0.8	1.9	0.2	40.92
					138	0.3	0.9	0.8	1.5	-0.2	55.16
					137	0.3	1.7	0.8	2.1	-0.1	65.18
					NODE	Mxx	Myy	Mxy	Mmax	Mmin	ANGLE
					Cent	0.8	2.4	0.7	2.7	0.5	69.35
					17	0.2	3.5	0.7	3.7	0.1	78.67
					45	1.9	4.0	0.6	4.2	1.7	75.44
					138	1.1	0.8	0.8	1.8	0.2	39.69
					137	0.2	1.5	0.9	1.9	-0.3	63.28
					NODE	Vxx	Vyy				
					Cent	2.8	5.2				
					17	3.5	4.2				
					45	3.5	6.6				
					138	2.0	6.6				
					137	2.0	4.2				
			LC		NODE	Fxx	Fyy	Fxy	Fmax	Fmin	ANGLE
			SY (RS)		Cent	0.1	0.7	0.1	0.7	0.1	78.01
					17	0.2	1.3	0.1	1.3	0.2	83.63
					45	0.2	0.5	0.1	0.6	0.1	72.78
					138	0.3	0.5	0.1	0.6	0.3	64.27
					137	0.3	1.3	0.1	1.3	0.3	82.56
					NODE	Mxx	Myy	Mxy	Mmax	Mmin	ANGLE
					Cent	0.1	1.8	0.2	1.8	0.0	83.28
					17	0.4	3.1	0.5	3.2	0.3	79.30
					45	0.9	2.7	0.6	2.9	0.8	73.52
					138	1.0	4.0	0.4	4.0	0.9	82.61
					137	0.2	2.6	0.4	2.7	0.1	80.92
					NODE	Vxx	Vyy				
					Cent	0.7	5.7				
					17	0.2	0.8				
					45	0.2	12.0				
					138	1.6	12.0				
					137	1.6	0.8				
			LC		NODE	Fxx	Fyy	Fxy	Fmax	Fmin	ANGLE
			RC ENV~1	Max	Cent	0.7	2.1	0.8	2.5	0.4	65.88
					17	1.0	2.9	0.8	3.2	0.7	69.81
					45	1.0	1.4	0.8	2.0	0.4	51.44
					138	0.4	1.4	0.8	1.8	0.4	60.70
					137	0.4	2.9	0.8	3.1	0.4	73.65
				Min	Cent	-0.8	-0.5	-0.8	0.2	-1.5	-49.65
					17	-1.3	-0.5	-0.8	-0.0	-1.8	-62.51
					45	-1.3	-0.5	-0.8	-0.0	-1.8	-64.11
					138	-0.2	-0.5	-0.8	0.0	-1.2	-59.97
					137	-0.2	-0.5	-0.8	-0.0	-1.2	-58.03
					NODE	Mxx	Myy	Mxy	Mmax	Mmin	ANGLE
				Max	Cent	1.5	6.5	0.7	6.5	1.4	-85.16
					17	0.0	6.5	0.3	6.5	0.0	87.38
					45	3.5	10.0	0.4	10.1	3.5	-83.48
					138	3.2	7.6	1.1	7.7	3.2	82.04
					137	0.1	5.4	1.0	5.5	0.0	84.45
				Min	Cent	-0.0	1.3	-0.7	1.6	-0.3	-65.64

17	-0.7	-0.6	-1.2	0.5	-1.7	-44.41
45	-0.3	1.4	-0.8	1.7	-0.6	-67.77
138	0.7	-0.3	-0.5	0.9	-0.3	-4.98
137	-0.3	0.1	-0.8	0.3	-0.6	-64.04

	NODE	Vxx	Vyy
Max	Cent	-0.1	7.6
	17	0.9	4.5
	45	0.9	15.5
	138	-1.1	15.5
	137	-1.1	4.5
Min	Cent	-5.7	-3.8
	17	-6.2	-3.8
	45	-6.2	-8.6
	138	-5.5	-8.6
	137	-5.5	-3.8

LC		NODE	Fxx	Fyy	Fxy	Fmax	Fmin	ANGLE
RC ENV~2	Max	Cent	0.3	1.5	0.4	1.5	0.1	83.62
		17	0.4	2.1	0.4	2.1	0.2	85.72
		45	0.4	0.9	0.4	1.0	-0.0	77.79
		138	0.3	0.9	0.4	1.0	0.1	71.42
		137	0.3	2.1	0.4	2.1	0.2	84.61
	Min	Cent	-0.4	0.4	-0.4	0.7	-0.4	-62.49
		17	-0.7	0.7	-0.4	0.9	-0.7	-70.96
		45	-0.7	0.1	-0.4	0.4	-0.7	-77.91
		138	-0.1	0.1	-0.4	0.4	-0.2	-72.34
		137	-0.1	0.7	-0.4	0.9	-0.1	-58.68

	NODE	Mxx	Myy	Mxy	Mmax	Mmin	ANGLE
Max	Cent	1.1	4.8	-0.0	4.8	1.0	-85.70
	17	-0.3	4.5	-0.4	4.6	-0.4	-82.22
	45	2.4	7.4	-0.2	7.4	2.4	-83.85
	138	2.4	4.3	0.4	4.3	2.4	86.57
	137	-0.0	3.5	0.2	3.5	-0.0	-88.28
Min	Cent	0.6	3.4	-0.4	3.4	0.6	-89.26
	17	-0.4	2.4	-0.8	2.5	-0.5	-80.92
	45	1.2	4.8	-0.5	4.8	1.2	-85.80
	138	1.8	3.6	0.0	3.7	1.7	80.94
	137	-0.2	2.2	-0.2	2.2	-0.2	87.86

	NODE	Vxx	Vyy
Max	Cent	-2.4	4.6
	17	-1.9	2.7
	45	-1.9	6.5
	138	-3.0	6.5
	137	-3.0	2.7
Min	Cent	-4.0	1.1
	17	-4.1	0.2
	45	-4.1	2.0
	138	-4.1	2.0
	137	-4.1	0.2

ELEM	MAT	SEC	LC		NODE	Fxx	Fyy	Fxy	Fmax	Fmin	ANGLE
34	1	1	SX (RS)		Cent	0.7	2.2	0.7	2.5	0.5	69.30
					18	1.1	2.7	0.7	2.9	0.9	69.89
					155	1.1	1.8	0.7	2.2	0.7	58.78
					157	0.3	1.8	0.7	2.1	0.1	68.81
					156	0.3	2.7	0.7	2.8	0.2	75.17

	NODE	Mxx	Myy	Mxy	Mmax	Mmin	ANGLE
	Cent	0.9	2.0	0.6	2.3	0.6	65.70
	18	0.4	2.1	0.6	2.3	0.2	71.22
	155	2.4	4.2	0.7	4.5	2.2	70.76
	157	1.1	1.2	0.5	1.7	0.6	48.90
	156	0.5	2.5	0.5	2.6	0.4	76.91

	NODE	Vxx	Vyy
	Cent	3.2	4.7
	18	4.3	1.8

	155	4.3	9.0	
	157	2.1	9.0	
	156	2.1	1.8	

LC		NODE	Fxx	Fyy	Fxy	Fmax	Fmin	ANGLE
SY (RS)		Cent	0.3	1.6	0.3	1.7	0.2	76.14
		18	0.3	2.0	0.3	2.1	0.2	78.88
		155	0.3	1.8	0.3	1.9	0.2	77.41
		157	0.5	1.8	0.3	1.9	0.4	75.51
		156	0.5	2.0	0.3	2.1	0.5	77.40

	NODE	Mxx	Myy	Mxy	Mmax	Mmin	ANGLE
	Cent	0.4	2.2	0.5	2.4	0.2	75.65
	18	0.5	4.3	0.6	4.4	0.4	81.77
	155	1.1	4.0	0.6	4.1	1.0	78.58
	157	1.5	4.3	0.7	4.5	1.3	76.20
	156	0.3	2.4	0.8	2.7	0.0	71.01

	NODE	Vxx	Vyy
	Cent	1.6	5.9
	18	1.3	3.5
	155	1.3	14.0
	157	2.5	14.0
	156	2.5	3.5

LC		NODE	Fxx	Fyy	Fxy	Fmax	Fmin	ANGLE
RC ENV~1	Max	Cent	1.1	2.0	0.4	2.1	0.8	71.15
		18	1.9	2.1	0.4	2.3	1.3	64.05
		155	1.9	1.9	0.4	2.3	1.2	-20.80
		157	0.6	1.9	0.4	2.0	0.6	75.60
		156	0.6	2.1	0.4	2.2	0.6	77.51
	Min	Cent	-0.5	-2.5	-1.2	-0.1	-2.8	-21.60
		18	-0.7	-3.2	-1.2	-0.4	-3.5	-18.20
		155	-0.7	-1.7	-1.2	-0.2	-2.3	-30.60
		157	-0.5	-1.7	-1.2	-0.2	-2.2	-22.17
		156	-0.5	-3.2	-1.2	-0.3	-3.5	-15.16

	NODE	Mxx	Myy	Mxy	Mmax	Mmin	ANGLE
Max	Cent	1.5	7.4	0.8	7.5	1.4	-82.74
	18	0.3	8.3	0.6	8.4	0.3	-82.02
	155	3.3	8.6	0.9	8.8	3.1	81.06
	157	3.5	11.1	1.3	11.1	3.4	87.72
	156	0.3	5.7	1.1	5.9	0.2	79.27
Min	Cent	-0.3	2.0	-0.9	2.1	-0.4	-79.63
	18	-0.6	-0.3	-1.3	0.2	-1.1	-52.66
	155	-1.6	0.2	-0.9	0.4	-1.8	-74.05
	157	0.5	1.0	-0.3	1.1	0.4	-69.29
	156	-0.9	0.8	-0.7	0.8	-0.9	-82.41

	NODE	Vxx	Vyy
Max	Cent	0.7	6.0
	18	2.6	6.9
	155	2.6	12.6
	157	-0.8	12.6
	156	-0.8	6.9
Min	Cent	-5.7	-5.9
	18	-6.0	-2.0
	155	-6.0	-15.4
	157	-5.8	-15.4
	156	-5.8	-2.0

LC		NODE	Fxx	Fyy	Fxy	Fmax	Fmin	ANGLE
RC ENV~2	Max	Cent	0.8	0.5	0.2	1.1	-0.1	-19.40
		18	1.3	0.5	0.2	1.5	-0.1	-13.26
		155	1.3	0.5	0.2	1.6	0.1	-21.08
		157	0.3	0.5	0.2	0.8	-0.1	-32.09
		156	0.3	0.5	0.2	0.6	-0.1	75.48
	Min	Cent	-0.2	-1.2	-0.8	0.1	-1.5	-39.25
		18	-0.3	-2.0	-0.8	0.1	-2.2	86.41

155	-0.3	-0.5	-0.8	0.3	-0.8	-61.88
157	-0.2	-0.5	-0.8	0.3	-1.0	-56.67
156	-0.2	-2.0	-0.8	-0.0	-2.2	-21.46

	NODE	Mxx	Myy	Mxy	Mmax	Mmin	ANGLE
Max	Cent	1.0	5.5	0.2	5.5	1.0	-84.11
	18	-0.0	6.0	-0.1	6.1	-0.1	-82.84
	155	1.8	5.9	0.2	5.9	1.8	-84.53
	157	2.5	8.1	0.5	8.1	2.5	86.92
	156	-0.1	3.6	0.3	3.6	-0.1	-88.09
Min	Cent	0.3	4.3	-0.5	4.3	0.3	87.38
	18	-0.2	4.0	-0.9	4.0	-0.3	-88.65
	155	-0.3	4.0	-0.5	4.0	-0.3	-86.59
	157	2.0	4.8	-0.1	4.8	1.9	87.50
	156	-0.6	3.1	-0.4	3.1	-0.6	89.73

	NODE	Vxx	Vyy
Max	Cent	-1.5	2.5
	18	0.2	4.6
	155	0.2	1.9
	157	-3.1	1.9
	156	-3.1	4.6
Min	Cent	-3.8	-1.4
	18	-3.4	1.4
	155	-3.4	-5.9
	157	-4.1	-5.9
	156	-4.1	1.4

ELEM	MAT	SEC	LC	NODE	Fxx	Fyy	Fxy	Fmax	Fmin	ANGLE
35	1	1	SX (RS)	Cent	0.7	2.2	0.6	2.5	0.5	70.35
				19	1.1	2.7	0.6	2.9	0.9	71.20
				174	1.1	1.8	0.6	2.1	0.7	59.43
				176	0.3	1.8	0.6	2.0	0.1	69.57
				175	0.3	2.7	0.6	2.9	0.2	76.14

	NODE	Mxx	Myy	Mxy	Mmax	Mmin	ANGLE
	Cent	0.9	2.1	0.7	2.4	0.6	64.52
	19	0.4	2.8	0.7	3.0	0.2	75.87
	174	2.4	4.1	0.7	4.4	2.2	70.54
	176	1.1	1.4	0.7	2.0	0.5	50.22
	175	0.4	1.8	0.7	2.1	0.1	66.25

	NODE	Vxx	Vyy
	Cent	3.2	5.0
	19	4.3	2.7
	174	4.3	8.8
	176	2.2	8.8
	175	2.2	2.7

LC	NODE	Fxx	Fyy	Fxy	Fmax	Fmin	ANGLE
SY (RS)	Cent	0.3	1.9	0.1	1.9	0.3	87.00
	19	0.3	2.1	0.1	2.1	0.3	87.32
	174	0.3	2.1	0.1	2.1	0.3	87.38
	176	0.5	2.1	0.1	2.1	0.5	86.96
	175	0.5	2.1	0.1	2.1	0.5	86.88

	NODE	Mxx	Myy	Mxy	Mmax	Mmin	ANGLE
	Cent	0.3	1.9	0.5	2.1	0.2	73.13
	19	0.5	1.5	0.6	1.8	0.2	64.79
	174	1.3	6.7	0.7	6.8	1.2	83.07
	176	1.3	1.7	0.7	2.2	0.7	53.38
	175	0.4	2.0	0.7	2.3	0.1	69.35

	NODE	Vxx	Vyy
	Cent	1.4	5.9
	19	1.3	2.7
	174	1.3	14.4
	176	2.1	14.4
	175	2.1	2.7

LC		NODE	Fxx	Fyy	Fxy	Fmax	Fmin	ANGLE
RC ENV~1	Max	Cent	1.2	1.9	0.4	2.0	0.8	71.03
		19	1.9	2.0	0.4	2.2	1.3	63.38
		174	1.9	2.1	0.4	2.3	1.2	-19.24
		176	0.6	2.1	0.4	2.1	0.6	-82.96
		175	0.6	2.0	0.4	2.1	0.6	78.14
	Min	Cent	-0.5	-2.6	-1.2	-0.2	-2.9	-19.93
		19	-0.7	-3.4	-1.2	-0.4	-3.7	-16.70
		174	-0.7	-2.2	-1.2	-0.2	-2.3	-28.55
		176	-0.5	-2.2	-1.2	-0.4	-2.3	-11.07
		175	-0.5	-3.4	-1.2	-0.4	-3.6	-8.49

		NODE	Mxx	Myy	Mxy	Mmax	Mmin	ANGLE
	Max	Cent	1.4	2.7	1.0	3.2	0.9	61.39
		19	0.3	3.5	0.7	3.6	0.1	78.84
		174	3.0	7.6	1.0	7.7	2.6	80.77
		176	3.0	4.2	1.3	4.5	1.9	71.97
		175	0.3	1.6	1.0	2.1	-0.4	61.76
	Min	Cent	-0.4	-1.5	-1.1	-0.2	-1.7	-20.49
		19	-0.6	-2.2	-1.4	-0.3	-2.4	-19.02
		174	-1.8	-5.9	-1.0	-1.7	-5.9	-14.58
		176	0.5	-0.3	-0.6	0.5	-0.3	-9.29
		175	-0.8	-3.2	-0.9	-0.8	-3.5	1.63

		NODE	Vxx	Vyy
	Max	Cent	1.1	6.7
		19	3.0	7.4
		174	3.0	13.8
		176	-0.7	13.8
		175	-0.7	7.4
	Min	Cent	-5.3	-5.2
		19	-5.6	-0.6
		174	-5.6	-15.0
		176	-5.0	-15.0
		175	-5.0	-0.6

LC		NODE	Fxx	Fyy	Fxy	Fmax	Fmin	ANGLE
RC ENV~2	Max	Cent	0.8	0.3	0.2	1.1	-0.1	-17.93
		19	1.3	0.3	0.2	1.5	-0.1	-12.56
		174	1.3	0.4	0.2	1.6	-0.0	-19.46
		176	0.3	0.4	0.2	0.8	-0.1	-28.81
		175	0.3	0.3	0.2	0.6	-0.1	-16.59
	Min	Cent	-0.2	-1.4	-0.8	-0.0	-1.7	87.65
		19	-0.3	-2.2	-0.8	-0.0	-2.3	1.20
		174	-0.3	-0.7	-0.8	0.1	-1.0	89.37
		176	-0.1	-0.7	-0.8	0.1	-1.2	-51.80
		175	-0.1	-2.2	-0.8	-0.1	-2.4	1.35

		NODE	Mxx	Myy	Mxy	Mmax	Mmin	ANGLE
	Max	Cent	0.8	0.9	0.3	1.0	0.6	53.76
		19	0.1	1.1	0.1	1.3	-0.1	-65.64
		174	1.4	1.5	0.4	1.5	1.2	81.20
		176	1.9	3.0	0.7	3.3	1.5	68.83
		175	-0.1	-0.3	0.4	0.1	-0.6	39.32
	Min	Cent	0.1	-0.1	-0.6	0.4	-0.6	-42.38
		19	-0.2	0.5	-0.9	0.6	-0.6	-88.36
		174	-0.7	-0.5	-0.6	-0.2	-0.9	-70.94
		176	1.5	0.1	-0.2	1.6	0.1	21.99
		175	-0.6	-2.1	-0.5	-0.5	-2.2	7.39

		NODE	Vxx	Vyy
	Max	Cent	-0.6	3.0
		19	0.9	5.1
		174	0.9	2.3
		176	-2.2	2.3
		175	-2.2	5.1
	Min	Cent	-2.9	-0.6
		19	-2.7	2.0
		174	-2.7	-4.9
		176	-3.2	-4.9

					175	-3.2	2.0			

ELEM	MAT	SEC	LC		NODE	Fxx	Fyy	Fxy	Fmax	Fmin	ANGLE
36	1	1	SX	(RS)	Cent	3.3	0.9	3.8	6.0	-1.9	36.14
					7	9.1	2.2	3.8	10.7	0.5	23.71
					50	9.1	0.4	3.8	10.5	-1.0	20.49
					194	2.5	0.4	3.8	5.4	-2.4	37.16
					193	2.5	2.2	3.8	6.1	-1.4	43.61

	NODE	Mxx	Myy	Mxy	Mmax	Mmin	ANGLE
	Cent	5.9	3.1	2.6	7.5	1.5	31.20
	7	26.9	8.7	6.6	29.0	6.5	18.02
	50	1.8	4.0	0.7	4.2	1.6	74.37
	194	1.7	0.9	0.7	2.1	0.5	30.07
	193	7.0	1.1	6.7	11.3	-3.3	33.09

	NODE	Vxx	Vyy
	Cent	14.5	6.1
	7	43.9	5.8
	50	43.9	6.6
	194	14.8	6.6
	193	14.8	5.8

LC		NODE	Fxx	Fyy	Fxy	Fmax	Fmin	ANGLE
SY	(RS)	Cent	0.1	4.5	2.0	5.3	-0.6	68.55
		7	0.8	9.3	2.0	9.7	0.3	77.27
		50	0.8	0.6	2.0	2.7	-1.3	43.58
		194	0.8	0.6	2.0	2.7	-1.3	43.30
		193	0.8	9.3	2.0	9.7	0.4	77.22

	NODE	Mxx	Myy	Mxy	Mmax	Mmin	ANGLE
	Cent	1.0	6.5	1.2	6.7	0.7	78.57
	7	3.1	19.6	3.5	20.3	2.4	78.34
	50	0.6	2.6	3.8	5.5	-2.3	52.45
	194	0.6	3.7	0.8	3.9	0.4	76.60
	193	2.1	5.4	0.9	5.7	1.9	75.23

	NODE	Vxx	Vyy
	Cent	1.5	7.5
	7	3.2	27.0
	50	3.2	12.1
	194	4.3	12.1
	193	4.3	27.0

LC		NODE	Fxx	Fyy	Fxy	Fmax	Fmin	ANGLE
RC ENV~1	Max	Cent	3.0	6.5	4.2	7.4	-0.3	71.71
		7	8.4	13.0	4.2	13.4	2.7	79.42
		50	8.4	1.0	4.2	10.3	-0.7	24.04
		194	2.6	1.0	4.2	6.0	0.4	39.13
		193	2.6	13.0	4.2	13.4	1.0	78.83
	Min	Cent	-3.6	-2.4	-3.3	0.4	-5.3	-28.70
		7	-9.7	-5.5	-3.3	-0.9	-10.6	-18.51
		50	-9.7	-0.2	-3.3	0.5	-10.7	74.48
		194	-2.5	-0.2	-3.3	0.7	-4.8	55.64
		193	-2.5	-5.5	-3.3	-0.3	-6.0	-16.48

	NODE	Mxx	Myy	Mxy	Mmax	Mmin	ANGLE
Max	Cent	10.8	10.6	1.6	11.4	7.6	20.56
	7	38.3	26.0	5.5	39.6	15.7	12.72
	50	1.4	8.8	2.4	9.2	1.4	-77.57
	194	5.0	7.2	0.1	7.2	4.2	89.28
	193	13.2	7.2	6.2	16.1	7.1	25.21
Min	Cent	-0.9	-2.4	-3.7	3.9	-3.8	-52.33
	7	-15.5	-13.2	-7.7	1.3	-19.0	-65.23
	50	-2.1	0.8	-5.1	1.8	-4.8	-62.76
	194	0.9	-0.2	-1.5	2.8	-1.0	-27.45
	193	-0.8	-3.6	-7.2	4.3	-7.2	-10.09

	NODE	Vxx	Vyy
Max	Cent	28.5	14.1
	7	64.6	33.8
	50	64.6	15.6
	194	22.1	15.6
	193	22.1	33.8
Min	Cent	-0.6	-2.3
	7	-23.1	-20.2
	50	-23.1	-8.5
	194	-7.6	-8.5
	193	-7.6	-20.2

LC		NODE	Fxx	Fyy	Fxy	Fmax	Fmin	ANGLE
RC ENV~2	Max	Cent	1.0	3.2	2.1	4.2	-0.2	57.44
		7	2.9	5.9	2.1	6.5	1.6	61.01
		50	2.9	0.7	2.1	3.9	-0.5	27.39
		194	1.1	0.7	2.1	1.9	0.4	-38.24
		193	1.1	5.9	2.1	6.3	0.7	76.92
	Min	Cent	-1.7	1.4	-1.1	1.5	-2.0	-77.12
		7	-4.5	2.2	-1.1	2.4	-4.6	-83.54
		50	-4.5	0.2	-1.1	0.4	-4.7	73.37
		194	-0.9	0.2	-1.1	0.5	-2.4	59.74
		193	-0.9	2.2	-1.1	2.5	-1.5	-72.28

	NODE	Mxx	Myy	Mxy	Mmax	Mmin	ANGLE
Max	Cent	7.5	5.6	-0.2	7.5	5.5	-5.05
	7	22.2	11.2	1.3	22.3	11.2	6.34
	50	0.1	6.5	-1.1	6.8	-0.1	-77.29
	194	3.6	3.9	-0.7	4.6	3.0	-52.22
	193	9.0	1.8	1.9	9.9	1.8	-18.76
Min	Cent	3.6	3.6	-2.0	5.6	1.6	-37.61
	7	4.3	5.6	-3.2	8.2	1.7	-50.58
	50	-1.1	3.7	-1.6	4.0	-1.5	-76.29
	194	2.4	3.5	-0.9	3.9	1.9	-62.34
	193	4.2	0.5	-2.8	5.0	0.1	25.77

	NODE	Vxx	Vyy
Max	Cent	20.4	9.9
	7	38.3	14.3
	50	38.3	6.6
	194	12.6	6.6
	193	12.6	14.3
Min	Cent	10.9	4.9
	7	9.2	6.6
	50	9.2	1.7
	194	2.4	1.7
	193	2.4	6.6

ELEM	MAT	SEC	LC		NODE	Fxx	Fyy	Fxy	Fmax	Fmin	ANGLE
37	1	1	SX (RS)		Cent	3.3	1.6	3.2	5.8	-0.9	37.55
					10	9.0	1.9	3.2	10.3	0.6	21.11
					211	9.0	1.7	3.2	10.3	0.5	20.68
					213	2.5	1.7	3.2	5.3	-1.2	41.53
					212	2.5	1.9	3.2	5.4	-1.1	42.49

	NODE	Mxx	Myy	Mxy	Mmax	Mmin	ANGLE
	Cent	7.0	2.2	2.5	8.1	1.1	23.11
	10	33.1	6.7	7.4	35.1	4.7	14.68
	211	2.8	4.3	1.8	5.5	1.6	56.56
	213	1.8	1.1	1.3	2.8	0.2	38.12
	212	9.7	2.1	7.9	14.7	-2.9	32.25

	NODE	Vxx	Vyy
	Cent	17.0	4.6
	10	54.1	0.6
	211	54.1	9.0
	213	20.2	9.0
	212	20.2	0.6

LC		NODE	Fxx	Fyy	Fxy	Fmax	Fmin	ANGLE
SY (RS)		Cent	0.9	5.1	2.7	6.4	-0.5	63.95
		10	2.7	11.4	2.7	12.2	1.9	74.09
		211	2.7	1.7	2.7	5.0	-0.5	39.96
		213	1.1	1.7	2.7	4.1	-1.3	48.35
		212	1.1	11.4	2.7	12.1	0.4	76.16

	NODE	Mxx	Myy	Mxy	Mmax	Mmin	ANGLE
	Cent	2.7	7.9	1.8	8.5	2.1	72.42
	10	9.8	25.5	5.0	26.9	8.3	73.65
	211	1.2	4.0	4.8	7.6	-2.3	53.01
	213	0.8	4.0	0.8	4.2	0.6	76.23
	212	3.6	5.3	2.5	7.1	1.7	54.09

	NODE	Vxx	Vyy
	Cent	5.5	11.9
	10	13.1	37.6
	211	13.1	14.0
	213	7.1	14.0
	212	7.1	37.6

LC		NODE	Fxx	Fyy	Fxy	Fmax	Fmin	ANGLE
RC ENV~1	Max	Cent	4.5	5.6	4.5	8.1	-0.4	57.03
		10	12.7	12.2	4.5	14.3	4.3	21.09
		211	12.7	1.9	4.5	14.2	0.3	20.00
		213	1.3	1.9	4.5	6.1	-0.6	46.87
		212	1.3	12.2	4.5	13.4	-0.8	73.61
	Min	Cent	-2.1	-4.6	-2.0	0.0	-5.0	-55.35
		10	-5.5	-10.6	-2.0	-0.3	-10.8	-68.85
		211	-5.5	-1.5	-2.0	-0.7	-6.3	-67.64
		213	-3.8	-1.5	-2.0	-0.4	-6.7	-52.08
		212	-3.8	-10.6	-2.0	-2.0	-10.9	-9.64

		NODE	Mxx	Myy	Mxy	Mmax	Mmin	ANGLE
	Max	Cent	10.4	12.7	-0.0	12.7	6.9	-84.07
		10	34.4	36.1	3.6	36.2	16.6	87.35
		211	1.3	7.1	4.3	8.8	1.0	64.49
		213	4.3	8.0	0.2	8.0	4.2	-87.01
		212	24.1	7.0	3.4	29.4	6.5	-23.53
	Min	Cent	-3.6	-3.1	-5.8	3.5	-6.4	-33.17
		10	-31.8	-14.8	-11.3	-2.2	-35.1	-35.23
		211	-5.5	-1.5	-5.2	-0.3	-7.2	-60.67
		213	0.7	-0.0	-2.4	3.0	-1.3	-33.18
		212	1.6	-3.6	-12.4	11.0	-11.9	-9.44

		NODE	Vxx	Vyy
	Max	Cent	26.5	22.0
		10	56.3	58.7
		211	56.3	13.1
		213	38.9	13.1
		212	38.9	58.7
	Min	Cent	-7.5	-1.8
		10	-52.0	-16.6
		211	-52.0	-14.9
		213	-3.3	-14.9
		212	-3.3	-16.6

LC		NODE	Fxx	Fyy	Fxy	Fmax	Fmin	ANGLE
RC ENV~2	Max	Cent	3.2	0.8	3.1	5.3	-0.3	34.48
		10	9.0	1.4	3.1	10.1	0.4	19.74
		211	9.0	0.2	3.1	9.9	-0.1	17.54
		213	-0.2	0.2	3.1	2.1	-0.3	56.98
		212	-0.2	1.4	3.1	3.1	-0.4	61.60
	Min	Cent	-0.3	-0.1	-0.2	-0.0	-1.4	-59.71
		10	-0.4	-0.2	-0.2	-0.1	-0.5	-61.89
		211	-0.4	-0.1	-0.2	0.0	-0.9	-70.26
		213	-2.7	-0.1	-0.2	0.1	-4.7	-57.33
		212	-2.7	-0.2	-0.2	-0.0	-4.4	-42.56

	NODE	Mxx	Myy	Mxy	Mmax	Mmin	ANGLE

Max	Cent	5.3	5.4	-1.5	8.2	3.0	-56.42
	10	10.7	14.3	-1.4	16.0	9.6	-73.20
	211	-0.8	2.9	0.2	2.9	-0.9	-84.72
	213	3.1	5.1	-1.0	5.5	2.4	-68.52
	212	17.5	1.9	-2.0	21.4	0.0	-23.56
Min	Cent	1.8	3.4	-4.2	6.2	-1.0	-32.24
	10	-9.2	10.6	-7.6	12.0	-11.4	-69.50
	211	-3.9	0.8	-0.5	0.8	-3.9	-88.71
	213	2.4	1.8	-1.1	3.7	1.3	-29.22
	212	8.6	-1.3	-8.8	9.0	-3.1	-11.76

	NODE	Vxx	Vyy
Max	Cent	14.3	15.2
	10	17.4	34.5
	211	17.4	1.5
	213	28.1	1.5
	212	28.1	34.5
Min	Cent	6.4	10.1
	10	-14.1	20.6
	211	-14.1	-4.1
	213	11.2	-4.1
	212	11.2	20.6

ELEM	MAT	SEC	LC	NODE	Fxx	Fyy	Fxy	Fmax	Fmin	ANGLE
38	1	1	SX (RS)	Cent	3.3	1.5	3.1	5.7	-0.9	36.85
				13	9.0	1.7	3.1	10.2	0.6	20.38
				230	9.0	1.7	3.1	10.2	0.5	20.22
				232	2.5	1.7	3.1	5.2	-1.1	41.37
				231	2.5	1.7	3.1	5.3	-1.1	41.75

NODE	Mxx	Myy	Mxy	Mmax	Mmin	ANGLE
Cent	7.0	2.2	2.8	8.3	0.9	24.70
13	33.0	6.5	7.7	35.1	4.5	15.01
230	2.8	4.2	1.6	5.2	1.7	57.10
232	1.8	1.4	1.2	2.8	0.4	39.24
231	9.6	2.1	8.2	14.8	-3.2	32.71

NODE	Vxx	Vyy
Cent	17.0	4.3
13	54.0	0.4
230	54.0	8.8
232	20.1	8.8
231	20.1	0.4

LC	NODE	Fxx	Fyy	Fxy	Fmax	Fmin	ANGLE
SY (RS)	Cent	0.9	4.9	2.4	6.0	-0.3	65.00
	13	2.7	11.3	2.4	11.9	2.0	75.50
	230	2.7	2.1	2.4	4.8	-0.0	41.45
	232	1.1	2.1	2.4	4.0	-0.9	50.93
	231	1.1	11.3	2.4	11.8	0.5	77.47

NODE	Mxx	Myy	Mxy	Mmax	Mmin	ANGLE
Cent	2.4	5.1	1.5	5.8	1.7	65.79
13	9.1	22.0	4.7	23.5	7.6	71.98
230	1.3	6.7	4.9	9.6	-1.6	59.44
232	0.9	1.4	1.0	2.2	0.1	52.19
231	3.3	2.9	1.8	4.9	1.3	41.91

NODE	Vxx	Vyy
Cent	4.9	10.9
13	13.1	35.9
230	13.1	14.4
232	6.9	14.4
231	6.9	35.9

LC		NODE	Fxx	Fyy	Fxy	Fmax	Fmin	ANGLE
RC ENV~1	Max	Cent	4.5	5.6	4.8	8.1	-0.3	37.39

		13	12.7	12.5	4.8	14.8	4.5	23.43
		230	12.7	2.2	4.8	14.3	0.2	18.57
		232	1.3	2.2	4.8	6.1	-0.3	46.78
		231	1.3	12.5	4.8	13.6	-0.1	74.57
	Min	Cent	-2.1	-4.2	-1.8	0.4	-4.4	-79.40
		13	-5.5	-10.1	-1.8	0.0	-10.2	-72.32
		230	-5.5	-1.9	-1.8	-0.8	-6.1	-69.31
		232	-3.9	-1.9	-1.8	-1.1	-7.2	-50.03
		231	-3.9	-10.1	-1.8	-2.1	-10.2	-7.22

	NODE	Mxx	Myy	Mxy	Mmax	Mmin	ANGLE
Max	Cent	10.5	9.5	0.4	11.7	6.6	-57.17
	13	34.6	32.1	3.9	35.4	15.8	11.64
	230	1.4	9.2	4.4	11.0	1.2	67.99
	232	4.5	8.2	0.2	8.5	4.3	-75.57
	231	24.8	4.3	3.8	30.0	3.7	-23.62
Min	Cent	-3.5	-0.7	-5.7	4.3	-6.6	-38.55
	13	-31.5	-11.9	-11.4	-1.0	-34.9	-37.75
	230	-5.0	-4.3	-5.4	-0.6	-8.9	-59.91
	232	0.7	2.3	-2.2	3.9	-0.9	-55.81
	231	1.7	-1.5	-12.5	11.0	-12.1	-26.00

	NODE	Vxx	Vyy
Max	Cent	26.6	20.6
	13	56.5	56.3
	230	56.5	13.3
	232	40.0	13.3
	231	40.0	56.3
Min	Cent	-7.3	-1.3
	13	-51.5	-15.5
	230	-51.5	-15.5
	232	-3.3	-15.5
	231	-3.3	-15.5

LC		NODE	Fxx	Fyy	Fxy	Fmax	Fmin	ANGLE
RC ENV~2	Max	Cent	3.1	1.4	3.4	5.7	-0.3	37.50
		13	8.9	2.7	3.4	10.4	1.2	23.42
		230	8.9	0.2	3.4	10.1	-0.2	18.63
		232	-0.2	0.2	3.4	2.3	-0.2	55.95
		231	-0.2	2.7	3.4	4.3	-0.2	64.47
	Min	Cent	-0.3	0.3	0.0	0.3	-1.3	86.13
		13	-0.5	0.7	0.0	0.7	-0.5	87.89
		230	-0.5	-0.2	0.0	-0.1	-1.2	83.33
		232	-2.7	-0.2	0.0	-0.1	-5.0	69.25
		231	-2.7	0.7	0.0	0.7	-4.4	87.28

	NODE	Mxx	Myy	Mxy	Mmax	Mmin	ANGLE
Max	Cent	5.9	5.9	-1.3	8.6	3.9	-56.73
	13	11.7	13.3	-1.3	15.3	9.8	-72.08
	230	-0.5	3.3	0.3	3.4	-0.6	-80.96
	232	3.3	5.9	-0.1	6.2	3.1	-73.79
	231	18.0	2.3	-1.6	21.7	0.9	-23.56
Min	Cent	2.3	4.4	-4.2	6.4	-0.4	-48.59
	13	-8.1	10.0	-7.6	11.5	-10.6	-67.92
	230	-3.5	2.1	-0.8	2.1	-3.5	85.86
	232	2.5	3.4	-1.4	4.1	1.8	-49.87
	231	9.1	0.9	-8.5	9.4	-1.5	-10.40

	NODE	Vxx	Vyy
Max	Cent	16.0	13.2
	13	19.3	30.4
	230	19.3	1.0
	232	28.8	1.0
	231	28.8	30.4
Min	Cent	7.7	9.3
	13	-12.2	17.9
	230	-12.2	-4.3
	232	12.0	-4.3
	231	12.0	17.9

ELEM	MAT	SEC	LC		NODE	Fxx	Fyy	Fxy	Fmax	Fmin	ANGLE

39	1	1	SX (RS)	Cent	3.1	0.1	2.5	4.5	-1.3	29.90
				31	8.9	0.5	2.5	9.6	-0.2	15.46
				14	8.9	0.7	2.5	9.6	0.0	15.83
				34	2.8	0.7	2.5	4.4	-1.0	33.99
				33	2.8	0.5	2.5	4.4	-1.1	32.85

	NODE	Mxx	Myy	Mxy	Mmax	Mmin	ANGLE
	Cent	5.6	2.6	0.9	5.9	2.3	15.95
	31	1.9	4.6	2.4	6.0	0.5	60.15
	14	26.4	6.6	4.4	27.3	5.7	11.94
	34	7.6	1.2	4.9	10.3	-1.4	28.45
	33	1.7	0.4	1.8	3.0	-0.8	35.02

	NODE	Vxx	Vyy
	Cent	13.8	4.8
	31	43.7	7.7
	14	43.7	2.0
	34	16.2	2.0
	33	16.2	7.7

LC		NODE	Fxx	Fyy	Fxy	Fmax	Fmin	ANGLE
SY (RS)		Cent	0.2	2.6	2.0	3.7	-0.9	60.15
		31	0.9	2.0	2.0	3.5	-0.6	52.51
		14	0.9	7.1	2.0	7.7	0.3	73.54
		34	0.4	7.1	2.0	7.7	-0.1	74.50
		33	0.4	2.0	2.0	3.4	-0.9	55.60

	NODE	Mxx	Myy	Mxy	Mmax	Mmin	ANGLE
	Cent	1.8	3.9	0.7	4.1	1.6	73.65
	31	1.0	5.3	3.5	7.2	-1.0	61.03
	14	5.0	18.5	3.2	19.2	4.3	77.34
	34	3.2	1.5	1.6	4.1	0.5	30.84
	33	0.2	1.2	1.2	2.0	-0.6	56.28

	NODE	Vxx	Vyy
	Cent	3.6	9.6
	31	3.2	11.3
	14	3.2	30.4
	34	5.4	30.4
	33	5.4	11.3

LC		NODE	Fxx	Fyy	Fxy	Fmax	Fmin	ANGLE
RC ENV~1	Max	Cent	2.8	2.0	3.5	5.0	-0.9	32.63
		31	7.7	3.0	3.5	9.3	1.5	24.26
		14	7.7	4.9	3.5	8.9	-1.6	18.77
		34	3.3	4.9	3.5	6.6	-0.6	61.33
		33	3.3	3.0	3.5	6.0	-0.3	37.56
	Min	Cent	-3.4	-3.2	-1.5	-0.2	-5.3	-18.15
		31	-10.0	-1.0	-1.5	-0.5	-10.2	-59.10
		14	-10.0	-9.3	-1.5	-2.7	-10.3	-78.61
		34	-2.2	-9.3	-1.5	-1.0	-9.5	-37.78
		33	-2.2	-1.0	-1.5	0.7	-2.9	-29.66

		NODE	Mxx	Myy	Mxy	Mmax	Mmin	ANGLE
	Max	Cent	9.4	7.9	1.6	10.1	6.7	23.88
		31	0.8	6.8	3.4	8.2	0.0	67.93
		14	37.7	31.7	3.7	38.4	22.2	11.33
		34	10.6	0.6	5.5	13.0	-0.2	23.66
		33	3.6	3.5	3.0	6.0	1.3	39.01
	Min	Cent	-1.8	0.0	-0.3	1.4	-1.8	-84.42
		31	-3.0	-3.8	-3.6	-0.6	-6.6	-44.01
		14	-15.1	-5.3	-5.0	7.4	-16.2	-16.82
		34	-4.7	-2.3	-4.3	0.2	-7.8	-21.24
		33	0.2	0.8	-0.6	1.7	-0.0	-0.53

	NODE	Vxx	Vyy
	Max	Cent	3.2	20.9
		31	25.5	11.6
		14	25.5	52.9

		34	13.3	52.9
		33	13.3	11.6
	Min	Cent	-24.3	1.8
		31	-61.8	-11.0
		14	-61.8	-7.9
		34	-19.1	-7.9
		33	-19.1	-11.0

LC		NODE	Fxx	Fyy	Fxy	Fmax	Fmin	ANGLE
RC ENV~2	Max	Cent	1.0	-0.6	2.3	1.1	-0.7	47.41
		31	2.5	1.6	2.3	2.5	1.0	4.96
		14	2.5	-2.1	2.3	2.5	-2.3	1.64
		34	2.0	-2.1	2.3	2.9	-2.3	22.24
		33	2.0	1.6	2.3	4.0	-0.2	40.98
	Min	Cent	-1.8	-1.0	0.1	0.6	-3.7	34.80
		31	-5.6	0.9	0.1	1.3	-6.3	64.47
		14	-5.6	-3.6	0.1	-1.6	-6.9	50.36
		34	-0.5	-3.6	0.1	-0.5	-4.4	4.28
		33	-0.5	0.9	0.1	0.9	-0.7	84.43

		NODE	Mxx	Myy	Mxy	Mmax	Mmin	ANGLE
	Max	Cent	5.5	5.3	1.1	6.0	4.9	39.06
		31	-0.6	3.0	0.5	3.0	-0.6	82.25
		14	20.8	17.8	0.6	21.9	16.4	-23.06
		34	5.7	-0.7	2.4	6.5	-0.9	18.54
		33	2.5	2.6	1.9	4.4	1.0	44.16
	Min	Cent	2.1	3.5	-0.1	3.8	1.7	67.72
		31	-2.0	-0.0	-0.9	0.4	-2.4	-67.98
		14	3.8	12.5	-2.5	12.5	3.7	86.41
		34	-0.9	-1.4	-1.6	0.4	-2.7	-30.98
		33	1.4	1.7	0.7	2.4	0.5	53.96

		NODE	Vxx	Vyy
	Max	Cent	-6.8	14.7
		31	-5.8	3.1
		14	-5.8	30.6
		34	4.1	30.6
		33	4.1	3.1
	Min	Cent	-15.2	11.0
		31	-34.1	-2.7
		14	-34.1	20.2
		34	-8.1	20.2
		33	-8.1	-2.7

ELEM	MAT	SEC	LC		NODE	Fxx	Fyy	Fxy	Fmax	Fmin	ANGLE
40	1	1	SX (RS)		Cent	0.2	0.3	0.6	0.9	-0.4	46.90
					32	0.5	1.3	0.6	1.6	0.1	61.28
					33	0.5	0.7	0.6	1.2	-0.1	49.53
					35	0.9	0.7	0.6	1.4	0.2	40.17
					4	0.9	1.3	0.6	1.7	0.4	53.59

		NODE	Mxx	Myy	Mxy	Mmax	Mmin	ANGLE
		Cent	0.4	0.8	0.5	1.2	0.1	56.20
		32	0.0	0.9	0.5	1.1	-0.2	65.70
		33	1.4	2.2	0.4	2.3	1.3	68.40
		35	0.4	0.3	0.4	0.8	-0.0	40.15
		4	0.4	0.5	0.5	1.0	-0.1	48.08

		NODE	Vxx	Vyy
		Cent	0.6	2.3
		32	2.0	0.8
		33	2.0	3.9
		35	1.0	3.9
		4	1.0	0.8

LC		NODE	Fxx	Fyy	Fxy	Fmax	Fmin	ANGLE
SY (RS)		Cent	0.3	0.2	0.5	0.7	-0.3	42.49
		32	0.5	0.7	0.5	1.1	0.1	49.44
		33	0.5	0.5	0.5	1.0	-0.0	42.80

```
                    35        1.0        0.5        0.5        1.3        0.2      30.12
                     4        1.0        0.7        0.5        1.4        0.3      35.65

                  NODE        Mxx        Myy        Mxy       Mmax       Mmin      ANGLE
            ---- ------ ---------- ---------- ---------- ---------- ---------- ----------
                  Cent        0.6        0.3        0.3        0.8        0.1      33.26
                    32        0.2        0.2        0.3        0.5       -0.0      46.33
                    33        1.5        1.0        0.2        1.6        0.9      20.54
                    35        0.6        0.0        0.3        0.7       -0.1      24.73
                     4        0.4        0.3        0.4        0.7       -0.1      41.53

                  NODE        Vxx        Vyy
            ---- ------ ---------- ----------
                  Cent        1.6        0.4
                    32        2.6        0.7
                    33        2.6        1.4
                    35        0.5        1.4
                     4        0.5        0.7


       LC         NODE        Fxx        Fyy        Fxy       Fmax       Fmin      ANGLE
-------- ---- ------ ---------- ---------- ---------- ---------- ---------- ----------
RC ENV~1  Max   Cent        0.4        0.4        0.9        1.3        0.0      46.61
                  32        0.3        1.7        0.9        2.1       -0.1      64.86
                  33        0.3        0.5        0.9        1.3        0.0      49.26
                  35        1.5        0.5        0.9        1.9        0.2      32.20
                   4        1.5        1.7        0.9        2.4        0.7      50.71
          Min   Cent       -0.1       -0.1       -0.4        0.1       -0.5      -4.56
                  32       -0.7       -0.8       -0.4       -0.4       -1.1     -39.65
                  33       -0.7       -0.8       -0.4       -0.4       -1.5     -52.44
                  35       -0.6       -0.8       -0.4       -0.3       -1.0     -43.26
                   4       -0.6       -0.8       -0.4       -0.2       -1.1     -30.40

                  NODE        Mxx        Myy        Mxy       Mmax       Mmin      ANGLE
            ---- ------ ---------- ---------- ---------- ---------- ---------- ----------
          Max   Cent        1.2        1.4        0.8        2.1        0.4      50.50
                  32        0.1        1.7        0.8        2.0       -0.2      69.12
                  33        2.9        3.5        0.8        4.0        2.4      56.20
                  35        1.7        0.2        0.7        1.9       -0.1      16.53
                   4        0.8        0.9        0.8        1.6        0.2      46.95
          Min   Cent        0.1       -0.3       -0.2        0.3       -0.3     -16.96
                  32       -0.3       -0.1       -0.2        0.0       -0.5     -49.32
                  33       -0.0       -0.9        0.0        0.1       -0.9       1.07
                  35        0.4       -0.4       -0.1        0.4       -0.5      -1.60
                   4       -0.1       -0.2       -0.3        0.2       -0.5     -52.80

                  NODE        Vxx        Vyy
            ---- ------ ---------- ----------
          Max   Cent       -0.4        4.0
                  32       -0.1        1.8
                  33       -0.1        6.3
                  35       -0.3        6.3
                   4       -0.3        1.8
          Min   Cent       -3.6       -0.7
                  32       -5.3        0.2
                  33       -5.3       -1.5
                  35       -2.4       -1.5
                   4       -2.4        0.2


       LC         NODE        Fxx        Fyy        Fxy       Fmax       Fmin      ANGLE
-------- ---- ------ ---------- ---------- ---------- ---------- ---------- ----------
RC ENV~2  Max   Cent        0.3        0.3        0.6        0.8        0.0      46.55
                  32       -0.0        1.1        0.6        1.3       -0.1      71.97
                  33       -0.0        0.1        0.6        0.1       -0.0      52.68
                  35        1.0        0.1        0.6        1.2        0.1      19.24
                   4        1.0        1.1        0.6        1.6        0.5      48.76
          Min   Cent        0.1        0.1        0.0        0.1       -0.3      30.25
                  32       -0.5       -0.0        0.0        0.0       -0.7      44.45
                  33       -0.5       -0.5        0.0        0.1       -1.1      43.61
                  35        0.2       -0.5        0.0        0.2       -0.7      20.98
                   4        0.2       -0.0        0.0        0.2       -0.0       7.64

                  NODE        Mxx        Myy        Mxy       Mmax       Mmin      ANGLE
            ---- ------ ---------- ---------- ---------- ---------- ---------- ----------
          Max   Cent        0.8        0.9        0.5        1.4        0.3      46.55
                  32       -0.1        1.1        0.5        1.3       -0.2      71.05
                  33        2.0        2.1        0.6        2.6        1.5      47.68
                  35        1.3       -0.0        0.5        1.4       -0.1      16.34
```

	4	0.5	0.6	0.4	1.0	0.2	45.43
Min	Cent	0.5	0.4	0.2	0.6	0.2	39.83
	32	-0.2	0.6	0.1	0.6	-0.3	77.02
	33	1.0	0.7	0.2	1.2	0.5	38.24
	35	0.5	-0.2	0.2	0.5	-0.4	16.94
	4	0.2	0.2	0.1	0.3	0.1	38.99

	NODE	Vxx	Vyy
Max	Cent	-1.4	2.5
	32	-2.0	1.3
	33	-2.0	3.8
	35	-0.5	3.8
	4	-0.5	1.3
Min	Cent	-2.5	1.1
	32	-3.5	0.8
	33	-3.5	1.3
	35	-1.7	1.3
	4	-1.7	0.8

ELEM	MAT	SEC	LC	NODE	Fxx	Fyy	Fxy	Fmax	Fmin	ANGLE
41	1	1	SX (RS)	Cent	1.4	0.2	0.3	1.5	0.1	13.41
				33	2.7	0.4	0.3	2.8	0.4	7.59
				34	2.7	0.0	0.3	2.8	0.0	6.52
				25	0.3	0.0	0.3	0.5	-0.2	35.27
				35	0.3	0.4	0.3	0.7	0.0	52.75

	NODE	Mxx	Myy	Mxy	Mmax	Mmin	ANGLE
	Cent	1.5	0.4	0.3	1.6	0.3	13.84
	33	2.1	2.3	0.4	2.6	1.8	53.36
	34	7.6	1.0	1.0	7.7	0.8	8.35
	25	0.6	0.5	0.8	1.3	-0.3	43.27
	35	0.8	0.3	0.5	1.1	0.0	31.29

	NODE	Vxx	Vyy
	Cent	7.6	2.1
	33	16.2	3.9
	34	16.2	0.3
	25	1.0	0.3
	35	1.0	3.9

LC	NODE	Fxx	Fyy	Fxy	Fmax	Fmin	ANGLE
SY (RS)	Cent	1.3	0.6	0.4	1.4	0.4	24.59
	33	0.8	0.3	0.4	1.0	0.1	26.66
	34	0.8	1.0	0.4	1.3	0.5	50.65
	25	1.7	1.0	0.4	1.9	0.8	22.65
	35	1.7	0.3	0.4	1.8	0.2	13.67

	NODE	Mxx	Myy	Mxy	Mmax	Mmin	ANGLE
	Cent	1.6	0.5	0.8	2.0	0.2	27.01
	33	0.1	0.7	0.7	1.1	-0.3	56.95
	34	3.2	1.5	0.8	3.5	1.2	20.79
	25	1.2	0.3	0.7	1.6	-0.0	29.21
	35	2.1	0.3	0.6	2.3	0.2	17.07

	NODE	Vxx	Vyy
	Cent	2.0	2.0
	33	5.4	1.4
	34	5.4	2.6
	25	1.5	2.6
	35	1.5	1.4

LC		NODE	Fxx	Fyy	Fxy	Fmax	Fmin	ANGLE
RC ENV~1	Max	Cent	2.1	0.5	0.6	2.2	0.3	13.00
		33	3.4	0.4	0.6	3.5	0.3	9.28
		34	3.4	0.7	0.6	3.5	0.4	7.78
		25	2.4	0.7	0.6	2.6	0.5	16.86
		35	2.4	0.4	0.6	2.6	0.2	13.70
	Min	Cent	-0.8	-0.8	-0.2	-0.5	-0.9	-32.34

33	-2.1	-0.5	-0.2	-0.5	-2.1	-85.73
34	-2.1	-1.2	-0.2	-0.4	-2.1	65.63
25	-1.0	-1.2	-0.2	-0.9	-1.4	-30.29
35	-1.0	-0.5	-0.2	-0.3	-1.1	-76.43

	NODE	Mxx	Myy	Mxy	Mmax	Mmin	ANGLE
Max	Cent	3.9	1.1	1.0	4.1	0.8	17.86
	33	3.9	3.7	1.1	4.6	3.0	41.42
	34	10.9	2.6	1.2	11.1	2.3	7.63
	25	3.3	0.1	0.8	3.4	-0.2	11.31
	35	3.6	0.3	0.8	3.8	0.1	13.50
Min	Cent	0.5	-0.0	-0.5	0.7	-0.3	-7.07
	33	-0.3	-1.0	-0.2	-0.3	-1.0	4.88
	34	-4.2	-0.4	-0.8	0.2	-4.4	-80.21
	25	0.9	-0.9	-0.8	1.1	-1.1	-20.56
	35	-0.7	-0.4	-0.4	-0.1	-0.9	-56.28

	NODE	Vxx	Vyy
Max	Cent	5.5	4.4
	33	13.3	6.3
	34	13.3	4.7
	25	0.2	4.7
	35	0.2	6.3
Min	Cent	-9.7	0.2
	33	-19.1	-1.5
	34	-19.1	-0.4
	25	-2.8	-0.4
	35	-2.8	-1.5

LC		NODE	Fxx	Fyy	Fxy	Fmax	Fmin	ANGLE
RC ENV~2	Max	Cent	1.4	-0.1	0.4	1.5	-0.1	11.74
		33	2.1	0.2	0.4	2.1	-0.0	8.42
		34	2.1	-0.2	0.4	2.1	-0.2	8.37
		25	1.2	-0.2	0.4	1.3	-0.3	8.77
		35	1.2	0.2	0.4	1.3	0.1	12.28
	Min	Cent	0.2	-0.3	0.1	0.3	-0.4	16.92
		33	-0.4	-0.3	0.1	0.2	-0.4	78.47
		34	-0.4	-0.5	0.1	-0.2	-0.5	49.04
		25	0.6	-0.5	0.1	0.7	-0.5	18.33
		35	0.6	-0.3	0.1	0.7	-0.4	17.38

	NODE	Mxx	Myy	Mxy	Mmax	Mmin	ANGLE
Max	Cent	2.9	0.7	0.5	3.0	0.6	11.19
	33	2.5	2.2	0.8	2.9	2.0	36.97
	34	6.1	1.6	0.5	6.1	1.6	0.89
	25	2.2	-0.2	0.3	2.2	-0.2	1.06
	35	2.2	0.1	0.5	2.3	-0.0	13.06
Min	Cent	0.9	0.4	-0.1	0.9	0.4	-1.57
	33	1.2	0.7	0.0	1.4	0.4	31.95
	34	-0.5	0.5	-0.1	0.6	-0.6	76.38
	25	1.1	-0.6	-0.3	1.1	-0.6	-4.76
	35	0.4	-0.2	-0.1	0.5	-0.2	-12.93

	NODE	Vxx	Vyy
Max	Cent	1.3	3.2
	33	4.1	3.8
	34	4.1	2.7
	25	-0.3	2.7
	35	-0.3	3.8
Min	Cent	-4.3	1.8
	33	-8.1	1.3
	34	-8.1	1.9
	25	-1.5	1.9
	35	-1.5	1.3

ELEM	MAT	SEC	LC		NODE	Fxx	Fyy	Fxy	Fmax	Fmin	ANGLE
42	1	1	SX (RS)		Cent	0.7	1.5	0.5	1.7	0.5	66.44
					36	1.1	1.0	0.5	1.5	0.6	40.83
					24	1.1	2.1	0.5	2.3	0.9	68.46
					39	0.2	2.1	0.5	2.2	0.1	76.70
					38	0.2	1.0	0.5	1.2	0.0	64.01

	NODE	Mxx	Myy	Mxy	Mmax	Mmin	ANGLE
	Cent	0.8	2.4	1.1	3.0	0.2	63.87
	36	2.0	4.7	1.1	5.1	1.6	69.99
	24	0.5	1.8	1.0	2.3	-0.0	61.80
	39	0.5	3.1	0.9	3.4	0.2	73.29
	38	1.0	0.3	1.0	1.7	-0.4	34.85

	NODE	Vxx	Vyy
	Cent	2.8	2.9
	36	3.5	7.7
	24	3.5	2.1
	39	2.0	2.1
	38	2.0	7.7

LC		NODE	Fxx	Fyy	Fxy	Fmax	Fmin	ANGLE
SY (RS)		Cent	0.2	1.1	0.3	1.1	0.1	74.47
		36	0.0	2.0	0.3	2.0	0.0	82.62
		24	0.0	0.3	0.3	0.4	-0.1	56.12
		39	0.4	0.3	0.3	0.6	0.0	39.55
		38	0.4	2.0	0.3	2.0	0.3	81.31

	NODE	Mxx	Myy	Mxy	Mmax	Mmin	ANGLE
	Cent	0.3	1.0	0.1	1.0	0.2	79.52
	36	0.7	5.2	0.6	5.3	0.6	82.28
	24	0.3	0.3	0.5	0.8	-0.2	44.14
	39	0.2	0.4	0.3	0.6	-0.0	52.18
	38	1.6	1.5	0.2	1.8	1.3	38.09

	NODE	Vxx	Vyy
	Cent	1.4	5.3
	36	0.2	11.3
	24	0.2	0.8
	39	2.6	0.8
	38	2.6	11.3

LC		NODE	Fxx	Fyy	Fxy	Fmax	Fmin	ANGLE
RC ENV~1	Max	Cent	0.6	2.3	0.3	2.4	0.5	81.27
		36	1.0	3.1	0.3	3.1	0.9	88.62
		24	1.0	2.6	0.3	2.7	0.9	80.54
		39	0.3	2.6	0.3	2.6	0.2	83.60
		38	0.3	3.1	0.3	3.1	0.3	88.46
	Min	Cent	-0.8	-0.7	-0.6	-0.1	-1.4	-46.50
		36	-1.2	-0.9	-0.6	0.0	-1.5	-25.10
		24	-1.2	-1.6	-0.6	-0.7	-2.1	-37.63
		39	-0.5	-1.6	-0.6	-0.1	-1.8	-23.24
		38	-0.5	-0.9	-0.6	-0.2	-1.2	-31.50

	NODE	Mxx	Myy	Mxy	Mmax	Mmin	ANGLE
Max	Cent	2.1	5.0	0.5	5.6	1.6	-67.49
	36	3.9	7.9	0.3	7.9	3.4	-88.65
	24	0.2	4.7	0.5	5.0	0.1	-77.76
	39	0.5	5.0	0.4	5.0	0.5	85.02
	38	4.9	4.3	0.2	6.4	3.3	-40.08
Min	Cent	0.1	-0.1	-1.7	1.7	-1.7	-43.02
	36	-0.6	-2.6	-1.9	0.7	-3.3	-35.08
	24	-0.8	0.6	-1.5	1.5	-1.7	-57.26
	39	-0.4	-1.2	-1.3	0.6	-2.2	-36.81
	38	0.7	0.9	-1.8	1.8	-0.2	-47.17

	NODE	Vxx	Vyy
Max	Cent	8.0	6.2
	36	7.5	12.2
	24	7.5	3.1
	39	8.4	3.1
	38	8.4	12.2
Min	Cent	0.7	-4.3
	36	-0.6	-10.4
	24	-0.6	-1.0

		39	1.3	-1.0		
		38	1.3	-10.4		

LC		NODE	Fxx	Fyy	Fxy	Fmax	Fmin	ANGLE
RC ENV~2	Max	Cent	0.1	1.6	-0.0	1.7	0.1	-79.02
		36	0.3	1.9	-0.0	1.9	0.3	-80.76
		24	0.3	1.5	-0.0	1.6	0.0	-79.59
		39	0.0	1.5	-0.0	1.6	-0.1	-77.40
		38	0.0	1.9	-0.0	2.0	0.0	-79.61
	Min	Cent	-0.4	0.3	-0.4	0.3	-0.5	-78.19
		36	-0.6	0.8	-0.4	0.8	-0.7	-86.25
		24	-0.6	-0.2	-0.4	0.2	-0.7	-56.47
		39	-0.2	-0.2	-0.4	0.0	-0.3	-9.14
		38	-0.2	0.8	-0.4	0.8	-0.3	-87.60

	NODE	Mxx	Myy	Mxy	Mmax	Mmin	ANGLE
Max	Cent	1.5	3.6	-0.3	4.1	1.1	-67.64
	36	2.7	5.0	-0.5	5.5	2.2	-66.44
	24	-0.2	3.4	-0.2	3.6	-0.2	-77.83
	39	0.2	3.3	-0.3	3.5	0.0	-75.38
	38	3.5	3.2	-0.6	4.6	2.3	-40.78
Min	Cent	0.8	1.9	-1.1	2.0	0.6	-74.18
	36	1.3	1.9	-1.4	2.2	0.9	-61.80
	24	-0.5	2.2	-0.9	2.2	-0.7	-85.91
	39	-0.1	1.1	-0.9	1.2	-0.2	-78.67
	38	2.3	2.3	-1.3	3.0	1.5	-46.65

	NODE	Vxx	Vyy
Max	Cent	5.7	2.7
	36	5.3	4.5
	24	5.3	2.0
	39	6.1	2.0
	38	6.1	4.5
Min	Cent	3.3	0.3
	36	2.7	-1.1
	24	2.7	0.5
	39	3.9	0.5
	38	3.9	-1.1

ELEM	MAT	SEC	LC		NODE	Fxx	Fyy	Fxy	Fmax	Fmin	ANGLE
43	1	1	SX (RS)		Cent	1.4	0.2	0.3	1.5	0.1	13.42
					37	2.7	0.0	0.3	2.8	0.0	6.53
					38	2.7	0.4	0.3	2.8	0.4	7.60
					40	0.3	0.4	0.3	0.7	0.0	52.71
					27	0.3	0.0	0.3	0.5	-0.2	35.28

	NODE	Mxx	Myy	Mxy	Mmax	Mmin	ANGLE
	Cent	1.5	0.4	0.3	1.6	0.3	13.84
	37	7.6	1.0	1.0	7.7	0.8	8.35
	38	2.1	2.3	0.4	2.6	1.8	53.36
	40	0.8	0.3	0.5	1.1	0.0	31.29
	27	0.6	0.5	0.8	1.3	-0.3	43.27

	NODE	Vxx	Vyy
	Cent	7.6	2.1
	37	16.2	0.3
	38	16.2	3.9
	40	1.0	3.9
	27	1.0	0.3

LC		NODE	Fxx	Fyy	Fxy	Fmax	Fmin	ANGLE
SY (RS)		Cent	1.3	0.6	0.4	1.4	0.4	24.58
		37	0.8	1.0	0.4	1.3	0.5	50.56
		38	0.8	0.3	0.4	1.0	0.1	26.69
		40	1.7	0.3	0.4	1.8	0.2	13.68
		27	1.7	1.0	0.4	1.9	0.8	22.61

	NODE	Mxx	Myy	Mxy	Mmax	Mmin	ANGLE

Cent	1.6	0.5	0.8	2.0	0.2	27.00
37	3.2	1.5	0.8	3.5	1.2	20.78
38	0.1	0.7	0.7	1.1	-0.3	56.95
40	2.1	0.3	0.6	2.3	0.2	17.07
27	1.2	0.3	0.7	1.6	-0.0	29.22

NODE	Vxx	Vyy
Cent	2.0	2.0
37	5.4	2.6
38	5.4	1.4
40	1.5	1.4
27	1.5	2.6

LC		NODE	Fxx	Fyy	Fxy	Fmax	Fmin	ANGLE
RC ENV~1	Max	Cent	2.2	0.4	0.2	2.2	0.4	2.76
		37	3.4	0.7	0.2	3.4	0.7	1.60
		38	3.4	0.4	0.2	3.4	0.4	1.94
		40	2.5	0.4	0.2	2.5	0.4	4.32
		27	2.5	0.7	0.2	2.5	0.7	5.40
	Min	Cent	-0.7	-0.8	-0.6	-0.1	-1.3	-39.32
		37	-2.0	-1.3	-0.6	-0.3	-2.2	-44.37
		38	-2.0	-0.5	-0.6	-0.3	-2.2	-73.12
		40	-1.0	-0.5	-0.6	0.0	-1.3	-59.83
		27	-1.0	-1.3	-0.6	-0.5	-1.7	-37.91

	NODE	Mxx	Myy	Mxy	Mmax	Mmin	ANGLE
Max	Cent	8.3	1.4	0.2	8.4	1.2	-6.53
	37	13.6	2.8	0.4	13.7	2.8	-3.59
	38	6.2	4.1	-0.2	6.8	3.9	-29.14
	40	5.3	0.4	0.1	5.5	0.4	-10.74
	27	9.7	-0.0	0.6	9.7	-0.1	-0.64
Min	Cent	1.9	0.1	-1.3	2.4	-0.6	-22.99
	37	-2.3	-0.2	-1.6	1.1	-3.1	-64.70
	38	0.6	-0.5	-1.7	1.4	-1.3	-33.00
	40	0.4	-0.3	-1.1	1.2	-1.1	-35.87
	27	2.4	-0.9	-1.1	2.7	-1.2	-15.40

	NODE	Vxx	Vyy
Max	Cent	11.8	5.9
	37	21.1	5.2
	38	21.1	7.0
	40	9.7	7.0
	27	9.7	5.2
Min	Cent	-4.1	0.8
	37	-11.3	0.0
	38	-11.3	-0.8
	40	0.7	-0.8
	27	0.7	0.0

LC		NODE	Fxx	Fyy	Fxy	Fmax	Fmin	ANGLE
RC ENV~2	Max	Cent	1.5	-0.1	-0.1	1.6	-0.1	-12.05
		37	2.0	-0.2	-0.1	2.1	-0.3	-8.96
		38	2.0	0.1	-0.1	2.1	-0.0	-9.26
		40	1.2	0.1	-0.1	1.3	0.1	-12.29
		27	1.2	-0.2	-0.1	1.3	-0.3	-8.94
	Min	Cent	0.3	-0.3	-0.4	0.4	-0.4	-14.27
		37	-0.2	-0.5	-0.4	-0.1	-0.5	-30.30
		38	-0.2	-0.2	-0.4	0.2	-0.3	-72.19
		40	0.7	-0.2	-0.4	0.8	-0.3	-17.35
		27	0.7	-0.5	-0.4	0.8	-0.5	-17.25

	NODE	Mxx	Myy	Mxy	Mmax	Mmin	ANGLE
Max	Cent	5.9	1.0	-0.5	6.0	0.8	-7.06
	37	9.7	1.9	-0.4	9.7	1.9	-4.01
	38	4.4	2.9	-0.7	4.9	2.5	-29.79
	40	3.8	0.1	-0.2	4.0	0.0	-10.97
	27	6.8	-0.3	0.1	6.8	-0.3	-0.95
Min	Cent	3.4	0.6	-0.8	3.5	0.5	-11.61
	37	3.7	1.0	-1.2	4.0	0.7	-17.07
	38	2.6	1.3	-1.3	3.1	0.9	-31.42
	40	2.5	-0.1	-0.7	2.6	-0.1	-10.21

					27	3.6	-0.7	-0.6	3.6	-0.7	-4.50

	NODE	Vxx	Vyy
Max	Cent	8.2	4.3
	37	11.8	3.5
	38	11.8	5.1
	40	6.5	5.1
	27	6.5	3.5
Min	Cent	2.6	2.6
	37	0.4	2.6
	38	0.4	2.3
	40	2.0	2.3
	27	2.0	2.6

ELEM	MAT	SEC	LC		NODE	Fxx	Fyy	Fxy	Fmax	Fmin	ANGLE
44	1	1	SX (RS)		Cent	0.2	0.3	0.6	0.9	-0.4	46.90
					38	0.5	0.7	0.6	1.2	-0.1	49.53
					39	0.5	1.3	0.6	1.6	0.1	61.28
					3	0.9	1.3	0.6	1.7	0.4	53.58
					40	0.9	0.7	0.6	1.4	0.2	40.17

	NODE	Mxx	Myy	Mxy	Mmax	Mmin	ANGLE
	Cent	0.4	0.8	0.5	1.2	0.1	56.20
	38	1.4	2.2	0.4	2.3	1.3	68.40
	39	0.0	0.9	0.5	1.1	-0.2	65.70
	3	0.4	0.5	0.5	1.0	-0.1	48.08
	40	0.4	0.3	0.4	0.8	-0.0	40.15

	NODE	Vxx	Vyy
	Cent	0.6	2.3
	38	2.0	3.9
	39	2.0	0.8
	3	1.0	0.8
	40	1.0	3.9

LC		NODE	Fxx	Fyy	Fxy	Fmax	Fmin	ANGLE
SY (RS)		Cent	0.3	0.2	0.5	0.7	-0.3	42.48
		38	0.5	0.5	0.5	1.0	-0.0	42.82
		39	0.5	0.7	0.5	1.1	0.1	49.49
		3	1.0	0.7	0.5	1.4	0.3	35.66
		40	1.0	0.5	0.5	1.3	0.2	30.10

	NODE	Mxx	Myy	Mxy	Mmax	Mmin	ANGLE
	Cent	0.6	0.3	0.3	0.8	0.1	33.26
	38	1.5	1.0	0.2	1.6	0.9	20.54
	39	0.2	0.2	0.3	0.5	-0.0	46.33
	3	0.4	0.3	0.4	0.7	-0.1	41.53
	40	0.6	0.0	0.3	0.7	-0.1	24.73

	NODE	Vxx	Vyy
	Cent	1.6	0.4
	38	2.6	1.4
	39	2.6	0.7
	3	0.5	0.7
	40	0.5	1.4

LC		NODE	Fxx	Fyy	Fxy	Fmax	Fmin	ANGLE
RC ENV~1	Max	Cent	0.4	0.5	0.4	1.2	0.1	-46.76
		38	0.3	0.5	0.4	0.8	0.1	55.58
		39	0.3	1.8	0.4	1.8	0.2	-71.94
		3	1.6	1.8	0.4	2.3	1.2	-48.68
		40	1.6	0.5	0.4	1.7	0.4	-19.36
	Min	Cent	-0.1	-0.1	-0.9	0.1	-1.0	-22.30
		38	-0.8	-0.8	-0.9	0.1	-1.7	-44.16
		39	-0.8	-0.8	-0.9	0.0	-1.6	-32.67
		3	-0.5	-0.8	-0.9	0.3	-1.5	-6.03
		40	-0.5	-0.8	-0.9	0.2	-1.5	-43.58

	NODE	Mxx	Myy	Mxy	Mmax	Mmin	ANGLE
Max	Cent	2.2	1.7	-0.1	3.2	1.4	-39.08
	38	4.8	3.9	-0.3	5.7	3.4	-35.36
	39	0.1	2.1	-0.1	2.6	0.0	-67.08
	3	1.2	1.2	0.1	2.1	0.9	-45.46
	40	3.6	0.2	-0.1	3.8	0.1	-10.52
Min	Cent	0.5	-0.0	-1.2	1.4	-0.8	-45.23
	38	0.7	-0.5	-1.3	1.4	-1.1	-29.15
	39	-0.3	0.1	-1.2	1.0	-1.1	-49.20
	3	0.1	0.0	-0.9	0.8	-0.9	-41.71
	40	1.0	-0.4	-1.1	1.4	-0.9	-27.42

	NODE	Vxx	Vyy
Max	Cent	6.5	4.6
	38	8.4	7.0
	39	8.4	2.2
	3	5.4	2.2
	40	5.4	7.0
Min	Cent	1.5	-0.2
	38	1.3	-0.8
	39	1.3	0.3
	3	1.1	0.3
	40	1.1	-0.8

LC		NODE	Fxx	Fyy	Fxy	Fmax	Fmin	ANGLE
RC ENV~2	Max	Cent	0.3	0.3	-0.1	0.9	0.0	-46.73
		38	-0.0	0.1	-0.1	0.1	-0.1	-51.49
		39	-0.0	1.1	-0.1	1.3	-0.1	-71.91
		3	1.0	1.1	-0.1	1.6	0.5	-48.30
		40	1.0	0.1	-0.1	1.2	0.1	-19.37
	Min	Cent	0.1	0.1	-0.6	0.1	-0.3	-35.33
		38	-0.5	-0.5	-0.6	0.1	-1.1	-47.79
		39	-0.5	0.0	-0.6	0.1	-0.7	-61.69
		3	0.2	0.0	-0.6	0.3	0.0	-14.52
		40	0.2	-0.5	-0.6	0.3	-0.7	-18.15

	NODE	Mxx	Myy	Mxy	Mmax	Mmin	ANGLE
Max	Cent	1.6	1.2	-0.5	2.3	0.6	-39.25
	38	3.5	2.8	-0.6	4.1	2.1	-35.65
	39	-0.1	1.5	-0.4	1.9	-0.3	-67.14
	3	0.9	0.9	-0.2	1.5	0.2	-45.38
	40	2.6	-0.1	-0.4	2.7	-0.2	-11.13
Min	Cent	1.0	0.6	-0.9	1.5	0.3	-28.58
	38	2.1	1.2	-1.0	2.6	0.9	-33.54
	39	-0.2	0.9	-0.9	1.1	-0.5	-69.49
	3	0.5	0.4	-0.7	0.7	0.1	-42.34
	40	1.6	-0.3	-0.8	1.7	-0.5	-16.01

	NODE	Vxx	Vyy
Max	Cent	4.7	3.3
	38	6.1	5.1
	39	6.1	1.6
	3	3.8	1.6
	40	3.8	5.1
Min	Cent	3.1	1.7
	38	3.9	2.3
	39	3.9	1.1
	3	2.0	1.1
	40	2.0	2.3

ELEM	MAT	SEC	LC		NODE	Fxx	Fyy	Fxy	Fmax	Fmin	ANGLE
45	1	1	SX (RS)		Cent	1.4	0.2	0.3	1.5	0.1	13.46
					41	0.2	0.4	0.3	0.7	0.0	53.73
					28	0.2	0.0	0.3	0.5	-0.2	36.04
					44	2.7	0.0	0.3	2.8	0.0	6.52
					43	2.7	0.4	0.3	2.8	0.4	7.60

	NODE	Mxx	Myy	Mxy	Mmax	Mmin	ANGLE
	Cent	1.5	0.4	0.3	1.6	0.3	13.55
	41	0.8	0.3	0.5	1.1	0.0	31.44

28	0.5	0.5	0.8	1.3	-0.3	43.43
44	7.6	1.0	1.0	7.8	0.8	8.30
43	2.1	2.3	0.4	2.6	1.8	53.34

NODE	Vxx	Vyy
Cent	7.7	2.1
41	1.0	3.9
28	1.0	0.3
44	16.3	0.3
43	16.3	3.9

LC		NODE	Fxx	Fyy	Fxy	Fmax	Fmin	ANGLE
SY (RS)		Cent	1.3	0.6	0.4	1.5	0.4	24.60
		41	1.7	0.3	0.4	1.8	0.2	13.72
		28	1.7	1.0	0.4	1.9	0.8	22.65
		44	0.8	1.0	0.4	1.3	0.5	50.45
		43	0.8	0.3	0.4	1.0	0.1	26.69

NODE	Mxx	Myy	Mxy	Mmax	Mmin	ANGLE
Cent	1.6	0.5	0.8	2.0	0.2	27.01
41	2.1	0.3	0.6	2.3	0.2	17.07
28	1.2	0.3	0.7	1.6	-0.0	29.21
44	3.2	1.5	0.8	3.5	1.2	20.79
43	0.1	0.7	0.7	1.1	-0.3	56.95

NODE	Vxx	Vyy
Cent	2.0	2.0
41	1.5	1.4
28	1.5	2.6
44	5.4	2.6
43	5.4	1.4

LC		NODE	Fxx	Fyy	Fxy	Fmax	Fmin	ANGLE
RC ENV~1	Max	Cent	2.2	0.4	0.2	2.2	0.4	2.47
		41	2.6	0.4	0.2	2.6	0.4	4.05
		28	2.6	0.7	0.2	2.6	0.7	4.98
		44	3.5	0.7	0.2	3.5	0.6	1.44
		43	3.5	0.4	0.2	3.5	0.4	1.76
	Min	Cent	-0.7	-0.8	-0.6	-0.0	-1.3	-38.64
		41	-0.9	-0.5	-0.6	0.1	-1.3	-58.85
		28	-0.9	-1.3	-0.6	-0.5	-1.7	-36.67
		44	-2.0	-1.3	-0.6	-0.4	-2.2	-67.34
		43	-2.0	-0.5	-0.6	-0.3	-2.2	-72.80

NODE	Mxx	Myy	Mxy	Mmax	Mmin	ANGLE
Max Cent	6.6	1.6	-0.1	7.2	1.4	-18.45
41	5.9	0.5	-0.2	6.5	0.5	-16.74
28	5.0	-0.0	0.2	5.2	-0.1	-10.53
44	12.5	3.2	0.1	12.6	3.1	-8.42
43	5.0	4.5	-0.4	6.7	3.8	-40.98
Min Cent	1.6	0.3	-1.9	2.4	-0.8	-30.93
41	0.7	-0.2	-1.8	1.7	-1.2	-35.80
28	1.7	-1.1	-1.5	2.2	-1.5	-22.80
44	-2.7	0.2	-2.1	1.5	-3.6	-65.84
43	0.4	-0.2	-2.4	1.6	-1.4	-39.28

NODE	Vxx	Vyy
Max Cent	5.3	-1.3
41	1.2	0.2
28	1.2	-0.6
44	11.8	-0.6
43	11.8	0.2
Min Cent	-10.0	-6.4
41	-1.7	-7.6
28	-1.7	-5.7
44	-20.8	-5.7
43	-20.8	-7.6

LC	NODE	Fxx	Fyy	Fxy	Fmax	Fmin	ANGLE

RC ENV~2	Max	Cent	1.4	-0.1	-0.1	1.5	-0.1	-12.01
		41	1.3	0.2	-0.1	1.4	0.2	-12.24
		28	1.3	-0.2	-0.1	1.3	-0.3	-8.60
		44	2.0	-0.2	-0.1	2.0	-0.3	-8.79
		43	2.0	0.2	-0.1	2.0	-0.1	-9.08
	Min	Cent	0.3	-0.3	-0.4	0.3	-0.4	-17.61
		41	0.7	-0.2	-0.4	0.8	-0.4	-16.95
		28	0.7	-0.5	-0.4	0.8	-0.5	-16.85
		44	-0.4	-0.5	-0.4	-0.3	-0.6	-50.38
		43	-0.4	-0.2	-0.4	0.2	-0.4	-78.57

	NODE	Mxx	Myy	Mxy	Mmax	Mmin	ANGLE
Max	Cent	4.8	1.2	-0.9	5.3	0.6	-18.37
	41	4.3	0.3	-0.6	4.7	-0.0	-16.55
	28	3.7	-0.3	-0.5	3.8	-0.5	-10.38
	44	8.9	2.3	-0.9	9.1	2.2	-8.81
	43	3.6	3.2	-1.0	4.9	2.1	-40.93
Min	Cent	2.7	0.8	-1.4	3.1	0.6	-22.93
	41	2.7	0.0	-1.3	2.8	-0.1	-13.11
	28	2.8	-0.8	-1.1	2.9	-0.9	-10.28
	44	2.3	1.3	-1.5	3.1	0.5	-34.27
	43	2.4	1.8	-1.8	3.4	0.5	-40.00

	NODE	Vxx	Vyy
Max	Cent	0.3	-3.3
	41	0.7	-3.1
	28	0.7	-3.1
	44	1.1	-3.1
	43	1.1	-3.1
Min	Cent	-5.2	-4.7
	41	-0.5	-5.6
	28	-0.5	-4.0
	44	-11.1	-4.0
	43	-11.1	-5.6

ELEM	MAT	SEC	LC		NODE	Fxx	Fyy	Fxy	Fmax	Fmin	ANGLE
46	1	1	SX	(RS)	Cent	0.7	1.5	0.5	1.7	0.5	66.46
					42	0.2	2.1	0.5	2.2	0.1	76.75
					43	0.2	1.0	0.5	1.2	0.0	63.96
					45	1.1	1.0	0.5	1.5	0.6	40.68
					17	1.1	2.1	0.5	2.3	0.9	68.52

	NODE	Mxx	Myy	Mxy	Mmax	Mmin	ANGLE
	Cent	0.8	2.5	1.1	3.0	0.2	63.92
	42	0.5	3.1	0.9	3.4	0.2	73.28
	43	1.0	0.3	1.0	1.7	-0.4	34.87
	45	2.0	4.7	1.1	5.1	1.6	70.12
	17	0.5	1.8	1.0	2.3	-0.0	61.84

	NODE	Vxx	Vyy
	Cent	2.8	2.9
	42	2.0	2.1
	43	2.0	7.8
	45	3.5	7.8
	17	3.5	2.1

LC		NODE	Fxx	Fyy	Fxy	Fmax	Fmin	ANGLE
SY	(RS)	Cent	0.2	1.1	0.3	1.1	0.1	74.44
		42	0.4	0.3	0.3	0.6	0.0	39.69
		43	0.4	2.0	0.3	2.0	0.3	81.28
		45	0.0	2.0	0.3	2.0	0.0	82.59
		17	0.0	0.3	0.3	0.4	-0.1	56.08

	NODE	Mxx	Myy	Mxy	Mmax	Mmin	ANGLE
	Cent	0.3	1.0	0.1	1.0	0.2	79.52
	42	0.2	0.4	0.3	0.6	-0.0	52.18
	43	1.6	1.5	0.2	1.8	1.3	38.09
	45	0.7	5.2	0.6	5.3	0.6	82.28
	17	0.3	0.3	0.5	0.8	-0.2	44.14

	NODE	Vxx	Vyy
	Cent	1.4	5.3
	42	2.6	0.8
	43	2.6	11.3
	45	0.2	11.3
	17	0.2	0.8

LC		NODE	Fxx	Fyy	Fxy	Fmax	Fmin	ANGLE
RC ENV~1	Max	Cent	0.6	2.4	0.3	2.4	0.5	81.60
		42	0.2	2.6	0.3	2.7	0.2	83.77
		43	0.2	3.2	0.3	3.2	0.2	88.59
		45	1.0	3.2	0.3	3.2	0.9	88.73
		17	1.0	2.6	0.3	2.7	0.9	80.77
	Min	Cent	-0.8	-0.7	-0.7	-0.1	-1.4	-47.30
		42	-0.5	-1.6	-0.7	-0.1	-1.9	-23.45
		43	-0.5	-0.8	-0.7	-0.2	-1.1	-33.57
		45	-1.2	-0.8	-0.7	0.1	-1.5	-26.61
		17	-1.2	-1.6	-0.7	-0.7	-2.1	-37.73

	NODE	Mxx	Myy	Mxy	Mmax	Mmin	ANGLE
Max	Cent	1.6	5.6	0.3	6.3	1.5	-68.21
	42	0.5	5.5	0.3	5.7	0.5	-74.89
	43	4.3	5.2	0.0	6.7	3.4	-48.79
	45	3.2	8.6	0.2	8.6	3.2	-87.20
	17	0.2	5.3	0.4	5.7	0.2	-75.97
Min	Cent	0.1	0.4	-1.9	2.1	-1.6	-47.99
	42	-0.4	-0.7	-1.5	0.9	-2.0	-42.25
	43	0.7	1.4	-2.1	2.3	-0.2	-52.47
	45	-0.8	-1.9	-2.2	1.0	-3.2	-41.11
	17	-0.8	1.3	-1.6	2.1	-1.7	-61.40

	NODE	Vxx	Vyy
Max	Cent	-0.6	3.9
	42	-1.3	0.7
	43	-1.3	10.0
	45	0.9	10.0
	17	0.9	0.7
Min	Cent	-6.4	-6.6
	42	-7.5	-3.5
	43	-7.5	-12.6
	45	-6.2	-12.6
	17	-6.2	-3.5

LC		NODE	Fxx	Fyy	Fxy	Fmax	Fmin	ANGLE
RC ENV~2	Max	Cent	0.2	1.6	-0.0	1.7	0.2	-79.27
		42	-0.0	1.5	-0.0	1.6	-0.1	-77.61
		43	-0.0	1.9	-0.0	2.0	-0.0	-80.08
		45	0.4	1.9	-0.0	2.0	0.4	-81.07
		17	0.4	1.5	-0.0	1.6	0.0	-79.73
	Min	Cent	-0.4	0.3	-0.4	0.3	-0.5	-79.46
		42	-0.2	-0.3	-0.4	0.0	-0.3	-3.86
		43	-0.2	0.9	-0.4	0.9	-0.3	-88.66
		45	-0.6	0.9	-0.4	0.9	-0.7	-87.73
		17	-0.6	-0.3	-0.4	0.2	-0.7	-22.01

	NODE	Mxx	Myy	Mxy	Mmax	Mmin	ANGLE
Max	Cent	1.2	4.1	-0.7	4.6	0.7	-68.56
	42	0.2	3.8	-0.5	4.1	-0.0	-75.07
	43	3.2	3.8	-0.9	4.9	2.1	-49.09
	45	2.0	5.3	-0.9	5.9	1.4	-69.00
	17	-0.2	3.9	-0.5	4.2	-0.3	-76.40
Min	Cent	0.7	2.6	-1.3	2.8	0.5	-72.20
	42	-0.1	2.0	-1.0	2.1	-0.2	-76.03
	43	2.3	2.8	-1.5	3.5	1.5	-53.63
	45	0.8	2.3	-1.6	2.7	0.3	-65.71
	17	-0.5	2.8	-1.1	2.9	-0.8	-80.62

	NODE	Vxx	Vyy
Max	Cent	-3.0	0.0

		42	-3.9	-0.4	
		43	-3.9	1.4	
		45	-1.9	1.4	
		17	-1.9	-0.4	
	Min	Cent	-4.7	-2.6	
		42	-5.5	-1.6	
		43	-5.5	-4.4	
		45	-4.1	-4.4	
		17	-4.1	-1.6	

ELEM	MAT	SEC	LC		NODE	Fxx	Fyy	Fxy	Fmax	Fmin	ANGLE
47	1	1	SX	(RS)	Cent	3.1	0.1	2.5	4.5	-1.3	29.75
					43	2.8	0.5	2.5	4.4	-1.1	32.83
					44	2.8	0.7	2.5	4.4	-1.0	33.74
					5	8.9	0.7	2.5	9.6	-0.0	15.73
					45	8.9	0.5	2.5	9.6	-0.2	15.44

		NODE	Mxx	Myy	Mxy	Mmax	Mmin	ANGLE
		Cent	5.6	2.6	0.9	5.9	2.3	15.91
		43	1.7	0.4	1.8	3.0	-0.8	34.97
		44	7.7	1.3	4.9	10.4	-1.4	28.45
		5	26.5	6.6	4.4	27.4	5.6	11.90
		45	1.9	4.7	2.4	6.0	0.5	60.16

		NODE	Vxx	Vyy
		Cent	13.8	4.8
		43	16.3	7.8
		44	16.3	1.8
		5	43.9	1.8
		45	43.9	7.8

LC		NODE	Fxx	Fyy	Fxy	Fmax	Fmin	ANGLE
SY	(RS)	Cent	0.2	2.6	2.0	3.7	-0.9	60.09
		43	0.5	2.0	2.0	3.4	-0.9	55.57
		44	0.5	7.1	2.0	7.7	-0.1	74.44
		5	0.9	7.1	2.0	7.7	0.3	73.48
		45	0.9	2.0	2.0	3.6	-0.6	52.51

	NODE	Mxx	Myy	Mxy	Mmax	Mmin	ANGLE
	Cent	1.8	3.9	0.7	4.1	1.6	73.65
	43	0.2	1.2	1.2	2.0	-0.6	56.28
	44	3.2	1.5	1.6	4.1	0.5	30.84
	5	5.0	18.5	3.2	19.2	4.3	77.34
	45	1.0	5.3	3.5	7.2	-1.0	61.03

	NODE	Vxx	Vyy
	Cent	3.6	9.6
	43	5.4	11.3
	44	5.4	30.4
	5	3.2	30.4
	45	3.2	11.3

LC		NODE	Fxx	Fyy	Fxy	Fmax	Fmin	ANGLE
RC ENV~1	Max	Cent	2.8	1.8	1.4	3.3	-0.4	19.26
		43	3.4	3.1	1.4	5.7	0.9	-41.88
		44	3.4	4.5	1.4	4.7	0.8	76.74
		5	7.7	4.5	1.4	7.9	-0.4	7.86
		45	7.7	3.1	1.4	8.0	1.7	12.04
	Min	Cent	-3.4	-3.3	-3.7	0.8	-6.0	-38.95
		43	-2.2	-0.9	-3.7	1.4	-4.7	-89.01
		44	-2.2	-9.8	-3.7	-1.0	-10.7	-0.92
		5	-10.1	-9.8	-3.7	-2.4	-11.7	-47.58
		45	-10.1	-0.9	-3.7	1.7	-11.2	-50.56

		NODE	Mxx	Myy	Mxy	Mmax	Mmin	ANGLE
	Max	Cent	10.6	10.1	-0.6	12.7	8.0	-44.95
		43	5.1	5.3	-0.3	9.5	3.2	-44.76
		44	12.2	1.1	3.3	14.1	1.1	-21.97

		5	39.9	35.4	4.3	41.0	29.8	13.75
		45	1.2	8.2	2.9	9.2	0.7	71.90
	Min	Cent	-0.6	1.6	-3.4	4.2	-1.9	-63.34
		43	1.0	1.7	-4.4	4.5	-2.2	-15.10
		44	-3.2	-1.8	-6.6	2.0	-9.0	4.74
		5	-13.0	-1.6	-4.5	9.4	-13.9	-16.60
		45	-2.6	-2.4	-4.0	0.7	-6.0	-49.39

		NODE	Vxx	Vyy
	Max	Cent	1.2	-5.1
		43	11.8	10.0
		44	11.8	2.4
		5	23.2	2.4
		45	23.2	10.0
	Min	Cent	-26.4	-25.9
		43	-20.8	-12.6
		44	-20.8	-58.4
		5	-64.5	-58.4
		45	-64.5	-12.6

LC		NODE	Fxx	Fyy	Fxy	Fmax	Fmin	ANGLE
RC ENV~2	Max	Cent	1.1	-0.7	-0.2	1.1	-0.8	-46.08
		43	1.9	1.7	-0.2	4.1	-0.3	-42.50
		44	1.9	-2.5	-0.2	2.8	-2.7	-21.63
		5	2.7	-2.5	-0.2	2.7	-2.7	-1.94
		45	2.7	1.7	-0.2	2.8	1.2	-6.21
	Min	Cent	-1.7	-1.2	-2.4	0.6	-3.7	-39.05
		43	-0.6	1.1	-2.4	1.1	-0.7	-83.65
		44	-0.6	-4.0	-2.4	-0.5	-4.8	-4.92
		5	-5.3	-4.0	-2.4	-1.7	-6.9	-46.24
		45	-5.3	1.1	-2.4	1.6	-6.1	-67.30

		NODE	Mxx	Myy	Mxy	Mmax	Mmin	ANGLE
	Max	Cent	7.4	7.4	-1.3	9.3	5.6	-45.57
		43	3.7	3.9	-2.0	6.9	1.0	-44.91
		44	8.4	-0.1	-0.0	10.0	-0.8	-21.64
		5	23.8	22.5	1.2	24.2	21.8	18.98
		45	-0.1	4.8	-0.1	5.3	-0.5	-74.49
	Min	Cent	4.0	5.5	-2.5	6.7	2.4	-52.13
		43	2.6	2.9	-3.2	4.8	0.4	-47.21
		44	1.8	-0.9	-4.0	1.8	-1.8	-0.50
		5	6.7	16.7	-1.9	16.8	6.4	-85.25
		45	-1.6	1.9	-1.5	1.9	-1.6	-88.62

		NODE	Vxx	Vyy
	Max	Cent	-10.1	-14.6
		43	1.1	1.4
		44	1.1	-27.6
		5	-9.4	-27.6
		45	-9.4	1.4
	Min	Cent	-18.5	-19.1
		43	-11.1	-4.4
		44	-11.1	-38.0
		5	-37.7	-38.0
		45	-37.7	-4.4

ELEM	MAT	SEC	LC		NODE	Fxx	Fyy	Fxy	Fmax	Fmin	ANGLE
48	1	1	SX (RS)		Cent	0.2	0.3	0.6	0.9	-0.4	47.01
					46	0.9	0.7	0.6	1.4	0.2	40.22
					2	0.9	1.3	0.6	1.7	0.4	53.72
					49	0.5	1.3	0.6	1.6	0.1	61.30
					48	0.5	0.7	0.6	1.2	-0.1	49.47

		NODE	Mxx	Myy	Mxy	Mmax	Mmin	ANGLE
		Cent	0.4	0.8	0.5	1.2	0.1	56.31
		46	0.4	0.3	0.4	0.8	-0.0	40.11
		2	0.4	0.5	0.5	1.0	-0.1	48.11
		49	0.0	0.9	0.5	1.1	-0.2	65.75
		48	1.4	2.2	0.4	2.3	1.3	68.55

		NODE	Vxx	Vyy

Cent	0.6	2.3	
46	1.1	3.9	
2	1.1	0.8	
49	2.0	0.8	
48	2.0	3.9	

LC		NODE	Fxx	Fyy	Fxy	Fmax	Fmin	ANGLE
SY (RS)		Cent	0.3	0.2	0.5	0.7	-0.3	42.48
		46	1.0	0.5	0.5	1.4	0.2	30.09
		2	1.0	0.7	0.5	1.4	0.3	35.66
		49	0.5	0.7	0.5	1.1	0.1	49.51
		48	0.5	0.5	0.5	1.0	-0.0	42.81

	NODE	Mxx	Myy	Mxy	Mmax	Mmin	ANGLE
	Cent	0.6	0.3	0.3	0.8	0.1	33.26
	46	0.6	0.0	0.3	0.7	-0.1	24.73
	2	0.4	0.3	0.4	0.7	-0.1	41.53
	49	0.2	0.2	0.3	0.5	-0.0	46.33
	48	1.5	1.0	0.2	1.6	0.9	20.54

	NODE	Vxx	Vyy
	Cent	1.6	0.4
	46	0.5	1.4
	2	0.5	0.7
	49	2.6	0.7
	48	2.6	1.4

LC		NODE	Fxx	Fyy	Fxy	Fmax	Fmin	ANGLE
RC ENV~1	Max	Cent	0.4	0.5	0.9	1.3	0.0	46.70
		46	1.6	0.5	0.9	2.0	0.2	31.72
		2	1.6	1.8	0.9	2.5	0.7	50.51
		49	0.3	1.8	0.9	2.2	-0.1	65.15
		48	0.3	0.5	0.9	1.3	0.0	49.35
	Min	Cent	-0.1	-0.1	-0.3	0.1	-0.5	-16.24
		46	-0.5	-0.8	-0.3	-0.3	-1.0	-39.49
		2	-0.5	-0.8	-0.3	-0.2	-1.0	-29.03
		49	-0.8	-0.8	-0.3	-0.4	-1.1	-42.13
		48	-0.8	-0.8	-0.3	-0.4	-1.4	-54.05

		NODE	Mxx	Myy	Mxy	Mmax	Mmin	ANGLE
	Max	Cent	1.9	1.9	1.5	3.4	0.4	44.78
		46	2.7	0.2	1.3	3.1	-0.3	19.61
		2	1.4	1.4	1.1	2.5	0.3	45.22
		49	0.0	2.4	1.4	3.0	-0.2	67.05
		48	4.1	4.2	1.6	5.7	2.7	44.53
	Min	Cent	0.5	0.1	0.2	0.7	0.1	17.96
		46	0.8	-0.4	0.2	0.9	-0.9	15.98
		2	0.2	0.1	-0.0	0.2	0.1	-18.05
		49	-0.4	0.4	0.1	0.4	-0.9	76.53
		48	0.6	-0.2	0.4	0.9	-0.4	20.93

		NODE	Vxx	Vyy
	Max	Cent	4.9	-0.2
		46	3.3	0.3
		2	3.3	-0.6
		49	7.4	-0.6
		48	7.4	0.3
	Min	Cent	1.2	-4.9
		46	0.6	-7.5
		2	0.6	-2.4
		49	1.2	-2.4
		48	1.2	-7.5

LC		NODE	Fxx	Fyy	Fxy	Fmax	Fmin	ANGLE
RC ENV~2	Max	Cent	0.2	0.3	0.6	0.8	0.0	46.90
		46	1.0	0.1	0.6	1.1	0.1	19.43
		2	1.0	1.1	0.6	1.5	0.4	48.27
		49	-0.0	1.1	0.6	1.2	-0.0	71.97

48	-0.0	0.1	0.6	0.1	-0.0	52.87
Min Cent	0.1	0.0	0.0	0.1	-0.3	28.30
46	0.2	-0.4	0.0	0.2	-0.6	18.15
2	0.2	-0.0	0.0	0.2	-0.0	7.30
49	-0.5	-0.0	0.0	0.0	-0.6	46.24
48	-0.5	-0.4	0.0	0.1	-1.0	45.66

	NODE	Mxx	Myy	Mxy	Mmax	Mmin	ANGLE
Max	Cent	1.4	1.4	1.1	2.4	0.3	44.69
	46	2.0	-0.1	1.0	2.3	-0.2	19.60
	2	1.0	1.0	0.8	1.8	0.2	45.16
	49	-0.1	1.8	1.0	2.2	-0.4	67.27
	48	3.0	3.0	1.2	4.2	1.9	44.38
Min	Cent	1.0	0.8	0.6	1.5	0.3	39.34
	46	1.4	-0.3	0.6	1.6	-0.6	20.18
	2	0.6	0.6	0.4	1.0	0.1	43.01
	49	-0.2	1.1	0.6	1.3	-0.6	69.17
	48	1.9	1.4	0.8	2.5	0.8	37.14

	NODE	Vxx	Vyy
Max	Cent	3.6	-2.0
	46	2.4	-2.7
	2	2.4	-1.3
	49	5.4	-1.3
	48	5.4	-2.7
Min	Cent	2.8	-3.6
	46	1.4	-5.4
	2	1.4	-1.8
	49	3.6	-1.8
	48	3.6	-5.4

ELEM	MAT	SEC	LC		NODE	Fxx	Fyy	Fxy	Fmax	Fmin	ANGLE
49	1	1	SX	(RS)	Cent	3.1	0.1	2.5	4.5	-1.3	29.75
					47	2.8	0.7	2.5	4.4	-1.0	33.74
					48	2.8	0.5	2.5	4.4	-1.1	32.83
					50	8.9	0.5	2.5	9.6	-0.2	15.44
					7	8.9	0.7	2.5	9.6	-0.0	15.73

NODE	Mxx	Myy	Mxy	Mmax	Mmin	ANGLE
Cent	5.6	2.6	0.9	5.9	2.3	15.91
47	7.7	1.3	4.9	10.4	-1.4	28.45
48	1.7	0.4	1.8	3.0	-0.8	34.97
50	1.9	4.7	2.4	6.0	0.5	60.16
7	26.5	6.6	4.4	27.4	5.6	11.90

NODE	Vxx	Vyy
Cent	13.8	4.8
47	16.3	1.8
48	16.3	7.8
50	43.9	7.8
7	43.9	1.8

LC		NODE	Fxx	Fyy	Fxy	Fmax	Fmin	ANGLE
SY	(RS)	Cent	0.2	2.6	2.0	3.7	-0.9	60.10
		47	0.5	7.1	2.0	7.7	-0.1	74.44
		48	0.5	2.0	2.0	3.4	-0.9	55.57
		50	0.9	2.0	2.0	3.6	-0.6	52.52
		7	0.9	7.1	2.0	7.7	0.3	73.49

NODE	Mxx	Myy	Mxy	Mmax	Mmin	ANGLE
Cent	1.8	3.9	0.7	4.1	1.6	73.65
47	3.2	1.5	1.6	4.1	0.5	30.83
48	0.2	1.2	1.2	2.0	-0.6	56.28
50	1.0	5.3	3.5	7.2	-1.0	61.03
7	5.0	18.5	3.2	19.2	4.3	77.34

NODE	Vxx	Vyy
Cent	3.6	9.6
47	5.4	30.4

		48	5.4	11.3				
		50	3.2	11.3				
		7	3.2	30.4				

LC		NODE	Fxx	Fyy	Fxy	Fmax	Fmin	ANGLE
RC ENV~1	Max	Cent	2.8	1.9	3.7	5.1	-0.8	32.57
		47	3.4	4.6	3.7	6.4	-0.8	59.60
		48	3.4	3.1	3.7	6.2	-0.3	38.14
		50	7.7	3.1	3.7	9.4	1.4	25.05
		7	7.7	4.6	3.7	8.9	-1.8	18.68
	Min	Cent	-3.4	-3.3	-1.4	-0.3	-5.0	-16.24
		47	-2.2	-9.7	-1.4	-1.2	-9.8	-34.43
		48	-2.2	-0.9	-1.4	0.6	-2.7	-29.43
		50	-10.1	-0.9	-1.4	-0.5	-10.3	-62.46
		7	-10.1	-9.7	-1.4	-3.0	-10.4	-79.08

		NODE	Mxx	Myy	Mxy	Mmax	Mmin	ANGLE
	Max	Cent	10.5	9.6	3.1	12.4	7.5	42.33
		47	12.0	1.0	6.5	15.0	-0.3	24.48
		48	5.2	4.9	4.3	9.3	1.4	43.87
		50	1.2	8.1	4.0	9.8	0.0	67.36
		7	39.9	35.0	4.4	41.0	28.9	13.85
	Min	Cent	-0.7	1.4	0.5	2.9	-0.8	82.04
		47	-3.3	-1.9	-3.4	1.0	-6.0	-51.59
		48	0.9	1.6	0.2	2.4	-0.1	80.87
		50	-2.7	-2.5	-2.9	-0.4	-5.1	-51.00
		7	-13.0	-2.1	-4.3	9.3	-13.8	-15.51

		NODE	Vxx	Vyy
	Max	Cent	26.3	-4.8
		47	20.6	3.0
		48	20.6	10.0
		50	64.6	10.0
		7	64.6	3.0
	Min	Cent	-1.3	-25.1
		47	-12.0	-57.8
		48	-12.0	-12.6
		50	-23.1	-12.6
		7	-23.1	-57.8

LC		NODE	Fxx	Fyy	Fxy	Fmax	Fmin	ANGLE
RC ENV~2	Max	Cent	1.0	-0.6	2.3	1.1	-0.7	46.16
		47	1.7	-2.0	2.3	2.6	-2.1	21.68
		48	1.7	1.6	2.3	3.8	-0.2	42.79
		50	2.4	1.6	2.3	2.4	1.0	70.79
		7	2.4	-2.0	2.3	2.4	-2.1	1.54
	Min	Cent	-1.6	-1.0	0.1	0.5	-3.5	40.51
		47	-0.4	-3.7	0.1	-0.4	-4.5	3.97
		48	-0.4	0.8	0.1	0.9	-0.7	84.71
		50	-5.0	0.8	0.1	1.3	-5.7	68.12
		7	-5.0	-3.7	0.1	-1.6	-6.5	46.42

		NODE	Mxx	Myy	Mxy	Mmax	Mmin	ANGLE
	Max	Cent	7.4	7.1	2.3	9.1	5.5	43.18
		47	7.7	-0.4	3.6	9.1	-0.9	20.64
		48	3.8	3.6	3.1	6.8	1.0	44.09
		50	-0.1	4.8	1.6	5.3	-0.6	73.36
		7	24.0	21.7	1.7	24.3	21.4	-15.15
	Min	Cent	3.6	4.9	1.3	6.4	2.2	53.90
		47	1.8	-1.1	-0.0	1.8	-1.8	-0.65
		48	2.5	2.8	1.7	4.4	0.5	48.99
		50	-1.6	1.7	0.1	1.7	-1.6	88.58
		7	6.3	15.3	-1.1	15.7	6.0	79.56

		NODE	Vxx	Vyy
	Max	Cent	18.7	-14.0
		47	10.2	-27.1
		48	10.2	1.1
		50	38.3	1.1
		7	38.3	-27.1
	Min	Cent	9.5	-18.6

47	-1.2	-35.4	
48	-1.2	-4.5	
50	9.2	-4.5	
7	9.2	-35.4	

ELEM	MAT	SEC	LC		NODE	Fxx	Fyy	Fxy	Fmax	Fmin	ANGLE
50	1	1	SX	(RS)	Cent	0.7	1.5	0.5	1.7	0.5	66.46
					48	0.2	1.0	0.5	1.2	0.0	63.96
					49	0.2	2.1	0.5	2.2	0.1	76.75
					21	1.1	2.1	0.5	2.3	0.9	68.52
					50	1.1	1.0	0.5	1.5	0.6	40.67

	NODE	Mxx	Myy	Mxy	Mmax	Mmin	ANGLE
	Cent	0.8	2.5	1.1	3.0	0.2	63.92
	48	1.0	0.3	1.0	1.7	-0.4	34.87
	49	0.5	3.1	0.9	3.4	0.2	73.28
	21	0.5	1.8	1.0	2.3	-0.0	61.84
	50	2.0	4.7	1.1	5.1	1.6	70.12

	NODE	Vxx	Vyy
	Cent	2.8	2.9
	48	2.0	7.8
	49	2.0	2.1
	21	3.5	2.1
	50	3.5	7.8

LC		NODE	Fxx	Fyy	Fxy	Fmax	Fmin	ANGLE
SY	(RS)	Cent	0.2	1.1	0.3	1.1	0.1	74.44
		48	0.4	2.0	0.3	2.0	0.3	81.28
		49	0.4	0.3	0.3	0.6	0.0	39.68
		21	0.0	0.3	0.3	0.4	-0.1	56.08
		50	0.0	2.0	0.3	2.0	0.0	82.59

	NODE	Mxx	Myy	Mxy	Mmax	Mmin	ANGLE
	Cent	0.3	1.0	0.1	1.0	0.2	79.52
	48	1.6	1.5	0.2	1.8	1.3	38.09
	49	0.2	0.4	0.3	0.6	-0.0	52.18
	21	0.3	0.3	0.5	0.8	-0.2	44.14
	50	0.7	5.2	0.6	5.3	0.6	82.28

	NODE	Vxx	Vyy
	Cent	1.4	5.3
	48	2.6	11.3
	49	2.6	0.8
	21	0.2	0.8
	50	0.2	11.3

LC		NODE	Fxx	Fyy	Fxy	Fmax	Fmin	ANGLE
RC ENV~1	Max	Cent	0.6	2.4	0.6	2.6	0.3	72.20
		48	0.3	3.1	0.6	3.2	0.2	81.46
		49	0.3	2.6	0.6	2.8	0.0	76.27
		21	1.0	2.6	0.6	2.9	0.8	70.96
		50	1.0	3.1	0.6	3.2	0.7	82.29
	Min	Cent	-0.8	-0.7	-0.3	-0.5	-1.0	-49.44
		48	-0.5	-0.9	-0.3	-0.4	-0.9	-9.95
		49	-0.5	-1.6	-0.3	-0.3	-1.6	-12.26
		21	-1.2	-1.6	-0.3	-1.1	-1.7	-29.44
		50	-1.2	-0.9	-0.3	-0.2	-1.3	-6.04

	NODE	Mxx	Myy	Mxy	Mmax	Mmin	ANGLE
Max	Cent	1.6	5.4	1.8	6.1	0.9	68.40
	48	4.2	4.7	2.1	6.5	2.8	47.76
	49	0.5	5.4	1.5	5.8	0.1	74.78
	21	0.2	4.9	1.6	5.3	-0.3	76.26
	50	3.2	8.4	2.1	8.8	2.5	77.47
Min	Cent	0.0	0.3	-0.4	0.6	-0.2	-55.03
	48	0.7	1.3	-0.1	1.7	0.3	56.92
	49	-0.4	-0.8	-0.3	-0.3	-1.0	-28.67

21	-0.8	1.1	-0.4	1.2	-1.1	-77.84
50	-0.8	-2.0	-0.2	-0.8	-2.1	-15.67

	NODE	Vxx	Vyy
Max	Cent	6.4	4.0
	48	7.4	10.0
	49	7.4	0.8
	21	6.2	0.8
	50	6.2	10.0
Min	Cent	0.5	-6.5
	48	1.2	-12.6
	49	1.2	-3.3
	21	-0.9	-3.3
	50	-0.9	-12.6

LC		NODE	Fxx	Fyy	Fxy	Fmax	Fmin	ANGLE
RC ENV~2	Max	Cent	0.2	1.5	0.4	1.6	0.2	79.13
		48	0.0	1.8	0.4	1.9	0.0	79.89
		49	0.0	1.4	0.4	1.5	-0.1	77.44
		21	0.3	1.4	0.4	1.5	0.0	79.56
		50	0.3	1.8	0.4	1.9	0.3	80.92
	Min	Cent	-0.4	0.2	0.0	0.2	-0.5	80.46
		48	-0.2	0.7	0.0	0.7	-0.3	89.25
		49	-0.2	-0.3	0.0	0.0	-0.3	1.84
		21	-0.6	-0.3	0.0	0.2	-0.7	21.46
		50	-0.6	0.7	0.0	0.7	-0.7	88.66

	NODE	Mxx	Myy	Mxy	Mmax	Mmin	ANGLE
Max	Cent	1.2	3.9	1.3	4.4	0.7	68.72
	48	3.1	3.5	1.5	4.8	2.0	48.12
	49	0.2	3.8	1.1	4.0	-0.0	74.90
	21	-0.2	3.7	1.1	3.9	-0.3	76.68
	50	2.1	5.3	1.5	5.8	1.5	68.70
Min	Cent	0.6	2.3	0.5	2.4	0.5	74.03
	48	2.2	2.7	0.8	3.4	1.4	53.28
	49	-0.1	1.6	0.4	1.7	-0.2	76.60
	21	-0.5	2.4	0.3	2.5	-0.8	82.87
	50	0.7	2.2	0.7	2.4	0.4	68.69

	NODE	Vxx	Vyy
Max	Cent	4.7	-0.1
	48	5.4	1.1
	49	5.4	-0.1
	21	4.1	-0.1
	50	4.1	1.1
Min	Cent	2.7	-2.4
	48	3.6	-4.5
	49	3.6	-1.5
	21	1.8	-1.5
	50	1.8	-4.5

ELEM	MAT	SEC	LC		NODE	Fxx	Fyy	Fxy	Fmax	Fmin	ANGLE
51	1	1	SX (RS)		Cent	3.7	1.0	0.3	3.7	1.0	6.85
					51	4.2	1.6	0.3	4.2	1.5	7.00
					52	4.2	0.5	0.3	4.2	0.5	5.05
					59	3.2	0.5	0.3	3.3	0.5	6.70
					58	3.2	1.6	0.3	3.3	1.5	10.56

	NODE	Mxx	Myy	Mxy	Mmax	Mmin	ANGLE
	Cent	5.1	0.9	0.9	5.3	0.7	11.67
	51	6.4	2.3	1.0	6.6	2.1	13.13
	52	3.9	0.8	0.9	4.1	0.6	15.01
	59	4.7	0.9	0.7	4.8	0.8	10.48
	58	5.5	0.6	0.8	5.7	0.5	9.41

	NODE	Vxx	Vyy
	Cent	3.0	2.6
	51	4.0	5.0
	52	4.0	0.2
	59	2.1	0.2

		58	2.1	5.0			

LC		NODE	Fxx	Fyy	Fxy	Fmax	Fmin	ANGLE
SY (RS)		Cent	1.0	0.9	1.3	2.2	-0.3	43.54
		51	0.8	1.8	1.3	2.6	-0.0	55.19
		52	0.8	0.3	1.3	1.9	-0.7	38.93
		59	1.3	0.3	1.3	2.1	-0.6	34.53
		58	1.3	1.8	1.3	2.8	0.2	50.77

	NODE	Mxx	Myy	Mxy	Mmax	Mmin	ANGLE
	Cent	0.8	1.2	1.2	2.2	-0.3	50.49
	51	1.0	5.0	0.8	5.1	0.9	78.77
	52	0.8	0.7	0.9	1.6	-0.2	44.08
	59	1.4	0.7	1.5	2.6	-0.4	38.05
	58	1.2	1.3	1.4	2.7	-0.1	45.70

	NODE	Vxx	Vyy
	Cent	2.1	5.3
	51	1.0	10.6
	52	1.0	0.3
	59	3.3	0.3
	58	3.3	10.6

LC		NODE	Fxx	Fyy	Fxy	Fmax	Fmin	ANGLE
RC ENV~1	Max	Cent	4.1	1.4	1.0	4.1	1.4	1.25
		51	4.6	2.4	1.0	4.6	2.2	1.36
		52	4.6	0.6	1.0	4.6	0.6	0.84
		59	3.5	0.6	1.0	3.5	0.6	1.16
		58	3.5	2.4	1.0	3.5	2.2	2.50
	Min	Cent	-3.3	-0.7	-1.5	-0.6	-3.4	-77.92
		51	-3.7	-1.2	-1.5	-0.8	-3.8	-78.30
		52	-3.7	-0.4	-1.5	-0.3	-3.8	-80.03
		59	-3.0	-0.4	-1.5	-0.3	-3.1	-77.52
		58	-3.0	-1.2	-1.5	-0.8	-3.1	-74.79

		NODE	Mxx	Myy	Mxy	Mmax	Mmin	ANGLE
	Max	Cent	4.9	4.0	-0.0	5.2	3.6	-62.66
		51	7.7	9.1	-0.4	9.2	6.4	-85.09
		52	2.3	5.2	-0.3	5.9	2.3	-73.88
		59	2.9	2.1	0.3	3.0	2.0	-24.87
		58	6.9	3.2	0.1	7.0	2.6	-6.22
	Min	Cent	-5.5	1.6	-2.7	2.6	-6.0	-74.49
		51	-5.1	-0.8	-2.9	2.0	-5.9	-38.12
		52	-7.3	3.1	-2.7	3.6	-7.7	-76.94
		59	-8.3	0.4	-2.6	0.8	-8.8	-75.75
		58	-4.1	0.6	-2.7	2.1	-4.9	-70.68

		NODE	Vxx	Vyy
	Max	Cent	11.0	9.7
		51	10.7	14.7
		52	10.7	6.2
		59	11.5	6.2
		58	11.5	14.7
	Min	Cent	2.3	-0.8
		51	1.1	-6.5
		52	1.1	4.5
		59	2.3	4.5
		58	2.3	-6.5

LC		NODE	Fxx	Fyy	Fxy	Fmax	Fmin	ANGLE
RC ENV~2	Max	Cent	2.2	0.9	-0.1	2.2	0.2	-3.18
		51	2.6	1.5	-0.1	2.6	0.5	-2.78
		52	2.6	0.3	-0.1	2.6	-0.0	-2.71
		59	1.9	0.3	-0.1	1.9	-0.0	-3.70
		58	1.9	1.5	-0.1	1.9	0.4	-3.83
	Min	Cent	-1.1	-0.2	-0.5	0.6	-1.2	-61.20
		51	-1.2	-0.2	-0.5	0.8	-1.3	-51.55
		52	-1.2	-0.1	-0.5	0.4	-1.3	-63.32
		59	-1.0	-0.1	-0.5	0.4	-1.1	-62.51

58	-1.0	-0.2	-0.5	0.7	-1.0	-38.56

	NODE	Mxx	Myy	Mxy	Mmax	Mmin	ANGLE
Max	Cent	0.4	3.0	-1.2	3.9	-0.4	-63.20
	51	2.5	4.8	-1.3	5.9	1.4	-60.08
	52	-1.3	4.0	-1.1	4.5	-1.6	-74.39
	59	-1.5	1.4	-1.1	2.1	-2.0	-67.33
	58	2.6	2.3	-1.2	4.0	0.6	-40.48
Min	Cent	-3.6	2.3	-2.0	2.6	-4.0	-78.06
	51	-2.1	3.0	-2.1	3.3	-2.5	-76.00
	52	-5.0	3.4	-1.9	3.6	-5.2	-81.08
	59	-5.6	0.7	-1.8	1.0	-6.0	-78.80
	58	-1.8	1.7	-2.0	2.3	-2.5	-70.56

	NODE	Vxx	Vyy
Max	Cent	8.0	5.1
	51	7.8	5.4
	52	7.8	4.8
	59	8.3	4.8
	58	8.3	5.4
Min	Cent	4.4	3.3
	51	3.8	1.9
	52	3.8	4.5
	59	5.1	4.5
	58	5.1	1.9

ELEM	MAT	SEC	LC		NODE	Fxx	Fyy	Fxy	Fmax	Fmin	ANGLE
52	1	1	SX	(RS)	Cent	2.4	0.5	0.1	2.4	0.5	4.28
					52	2.5	0.8	0.1	2.5	0.8	4.77
					53	2.5	0.2	0.1	2.5	0.2	3.68
					60	2.4	0.2	0.1	2.4	0.2	3.88
					59	2.4	0.8	0.1	2.4	0.7	5.11

	NODE	Mxx	Myy	Mxy	Mmax	Mmin	ANGLE
	Cent	3.9	0.7	0.6	4.0	0.6	9.76
	52	4.3	0.9	0.6	4.4	0.8	10.13
	53	3.2	0.5	0.5	3.3	0.4	9.48
	60	3.4	0.4	0.5	3.5	0.3	9.83
	59	4.7	0.9	0.7	4.8	0.8	9.99

	NODE	Vxx	Vyy
	Cent	1.9	0.2
	52	1.7	0.2
	53	1.7	0.3
	60	2.1	0.3
	59	2.1	0.2

LC		NODE	Fxx	Fyy	Fxy	Fmax	Fmin	ANGLE
SY	(RS)	Cent	1.2	0.3	0.9	1.8	-0.3	31.71
		52	1.1	0.3	0.9	1.7	-0.3	33.64
		53	1.1	0.3	0.9	1.7	-0.3	33.55
		60	1.4	0.3	0.9	1.9	-0.2	29.66
		59	1.4	0.3	0.9	1.9	-0.2	29.73

	NODE	Mxx	Myy	Mxy	Mmax	Mmin	ANGLE
	Cent	1.2	0.9	1.2	2.3	-0.2	41.88
	52	0.7	0.7	1.4	2.1	-0.6	44.51
	53	1.1	1.4	1.3	2.6	-0.0	48.43
	60	1.6	0.8	1.2	2.5	-0.0	36.59
	59	1.3	0.7	1.2	2.3	-0.3	38.07

	NODE	Vxx	Vyy
	Cent	0.4	0.7
	52	0.6	0.3
	53	0.6	1.2
	60	0.5	1.2
	59	0.5	0.3

LC		NODE	Fxx	Fyy	Fxy	Fmax	Fmin	ANGLE
RC ENV~1	Max	Cent	2.7	0.6	0.7	2.7	0.6	-1.66
		52	2.8	0.8	0.7	2.8	0.8	-1.81
		53	2.8	0.4	0.7	2.8	0.3	-1.44
		60	2.6	0.4	0.7	2.6	0.3	-1.54
		59	2.6	0.8	0.7	2.6	0.8	-1.96
	Min	Cent	-2.2	-0.4	-1.1	-0.4	-2.2	-78.97
		52	-2.2	-0.7	-1.1	-0.6	-2.3	-77.45
		53	-2.2	-0.2	-1.1	-0.1	-2.3	-80.51
		60	-2.1	-0.2	-1.1	-0.1	-2.2	-80.17
		59	-2.1	-0.7	-1.1	-0.6	-2.2	-76.86

		NODE	Mxx	Myy	Mxy	Mmax	Mmin	ANGLE
	Max	Cent	1.3	3.3	0.3	3.7	1.3	-75.29
		52	2.8	5.3	0.3	5.8	2.7	-75.42
		53	-0.1	4.8	0.4	4.8	-0.2	86.90
		60	-0.2	1.9	0.3	2.0	-0.3	85.77
		59	3.0	2.2	0.2	3.1	2.1	-19.20
	Min	Cent	-9.2	1.5	-2.5	2.1	-9.6	-79.77
		52	-7.4	3.1	-2.5	3.4	-7.8	-79.84
		53	-10.3	2.0	-2.4	2.7	-10.6	-72.98
		60	-11.2	0.3	-2.4	1.0	-11.6	-82.49
		59	-7.9	0.4	-2.5	0.8	-8.4	-76.65

		NODE	Vxx	Vyy
	Max	Cent	6.9	5.6
		52	6.3	6.2
		53	6.3	5.3
		60	7.4	5.3
		59	7.4	6.2
	Min	Cent	1.4	3.8
		52	1.5	4.5
		53	1.5	2.8
		60	1.3	2.8
		59	1.3	4.5

LC		NODE	Fxx	Fyy	Fxy	Fmax	Fmin	ANGLE
RC ENV~2	Max	Cent	1.5	0.3	-0.2	1.6	-0.0	-7.82
		52	1.6	0.4	-0.2	1.6	-0.0	-6.93
		53	1.6	0.2	-0.2	1.6	0.0	-8.07
		60	1.4	0.2	-0.2	1.5	-0.0	-8.97
		59	1.4	0.4	-0.2	1.5	-0.1	-7.59
	Min	Cent	-0.7	-0.1	-0.3	0.3	-0.7	-62.97
		52	-0.7	-0.3	-0.3	0.3	-0.8	-49.13
		53	-0.7	-0.0	-0.3	0.2	-0.8	-75.81
		60	-0.6	-0.0	-0.3	0.2	-0.7	-74.43
		59	-0.6	-0.3	-0.3	0.3	-0.7	-49.99

		NODE	Mxx	Myy	Mxy	Mmax	Mmin	ANGLE
	Max	Cent	-2.3	2.5	-0.9	2.8	-2.5	-75.81
		52	-1.2	4.1	-0.9	4.4	-1.4	-76.03
		53	-3.2	3.4	-0.8	3.5	-3.3	-82.36
		60	-3.5	1.1	-0.8	1.3	-3.6	-76.33
		59	-1.4	1.4	-0.9	2.1	-1.7	-67.47
	Min	Cent	-6.3	1.9	-1.7	2.1	-6.6	-82.28
		52	-5.0	3.3	-1.8	3.6	-5.3	-81.66
		53	-7.2	2.8	-1.7	2.9	-7.4	-83.72
		60	-7.8	0.6	-1.7	0.8	-8.0	-82.40
		59	-5.4	0.8	-1.8	1.0	-5.7	-79.14

		NODE	Vxx	Vyy
	Max	Cent	5.0	4.4
		52	4.6	4.8
		53	4.6	4.1
		60	5.3	4.1
		59	5.3	4.8
	Min	Cent	3.0	4.1
		52	2.8	4.5
		53	2.8	3.7
		60	3.2	3.7
		59	3.2	4.5

ELEM	MAT	SEC	LC		NODE	Fxx	Fyy	Fxy	Fmax	Fmin	ANGLE
53	1	1	SX	(RS)	Cent	1.7	0.2	0.3	1.7	0.1	11.49
					53	1.6	0.4	0.3	1.7	0.3	13.65
					54	1.6	0.1	0.3	1.7	0.0	11.11
					61	1.8	0.1	0.3	1.8	0.0	10.17
					60	1.8	0.4	0.3	1.8	0.3	12.28

	NODE	Mxx	Myy	Mxy	Mmax	Mmin	ANGLE
	Cent	2.9	0.3	0.4	2.9	0.3	7.81
	53	3.4	0.5	0.4	3.4	0.4	7.85
	54	2.3	0.3	0.3	2.3	0.2	8.51
	61	2.4	0.2	0.3	2.4	0.2	8.14
	60	3.5	0.4	0.4	3.6	0.4	7.25

	NODE	Vxx	Vyy
	Cent	1.9	0.2
	53	1.8	0.3
	54	1.8	0.1
	61	2.0	0.1
	60	2.0	0.3

LC		NODE	Fxx	Fyy	Fxy	Fmax	Fmin	ANGLE
SY	(RS)	Cent	1.6	0.3	0.6	1.8	0.1	22.47
		53	1.3	0.3	0.6	1.6	0.0	25.19
		54	1.3	0.4	0.6	1.6	0.1	26.92
		61	1.9	0.4	0.6	2.1	0.2	19.91
		60	1.9	0.3	0.6	2.1	0.1	18.82

	NODE	Mxx	Myy	Mxy	Mmax	Mmin	ANGLE
	Cent	1.3	1.1	1.2	2.4	-0.0	42.29
	53	1.1	1.4	1.2	2.5	0.1	48.66
	54	1.1	1.2	1.2	2.4	-0.1	46.43
	61	1.6	0.9	1.3	2.6	-0.1	37.50
	60	1.5	0.8	1.2	2.5	-0.1	37.24

	NODE	Vxx	Vyy
	Cent	0.1	1.0
	53	0.5	1.2
	54	0.5	0.8
	61	0.4	0.8
	60	0.4	1.2

LC		NODE	Fxx	Fyy	Fxy	Fmax	Fmin	ANGLE
RC ENV~1	Max	Cent	1.8	0.4	0.5	1.9	0.2	18.38
		53	1.8	0.5	0.5	1.8	0.4	8.20
		54	1.8	0.5	0.5	1.8	0.3	6.62
		61	2.0	0.5	0.5	2.2	0.3	16.41
		60	2.0	0.5	0.5	2.1	0.4	15.60
	Min	Cent	-1.5	-0.3	-0.7	-0.0	-1.8	-74.01
		53	-1.4	-0.3	-0.7	-0.2	-1.5	-70.76
		54	-1.4	-0.4	-0.7	0.1	-1.5	-81.90
		61	-1.8	-0.4	-0.7	-0.1	-2.1	-66.89
		60	-1.8	-0.3	-0.7	-0.2	-2.0	-73.46

	NODE	Mxx	Myy	Mxy	Mmax	Mmin	ANGLE
Max	Cent	-1.0	3.3	0.5	3.4	-1.1	85.21
	53	-0.1	4.8	0.4	4.8	-0.2	87.12
	54	-1.9	4.6	0.5	4.6	-1.9	85.94
	61	-2.1	2.0	0.7	2.1	-2.1	82.44
	60	-0.0	1.9	0.5	2.0	-0.1	83.29
Min	Cent	-11.2	1.2	-2.4	1.7	-11.6	-74.22
	53	-10.5	2.0	-2.5	2.5	-10.9	-74.20
	54	-11.4	2.1	-2.4	2.6	-11.7	-76.19
	61	-12.3	0.2	-2.3	0.7	-12.7	-74.07
	60	-10.8	0.3	-2.4	0.9	-11.1	-81.63

	NODE	Vxx	Vyy

Max	Cent	3.5	5.1
	53	3.2	5.3
	54	3.2	5.1
	61	4.1	5.1
	60	4.1	5.3
Min	Cent	-0.5	3.1
	53	-0.5	2.8
	54	-0.5	3.2
	61	-0.4	3.2
	60	-0.4	2.8

LC		NODE	Fxx	Fyy	Fxy	Fmax	Fmin	ANGLE
RC ENV~2	Max	Cent	1.1	0.1	-0.1	1.1	0.0	-9.20
		53	1.1	0.2	-0.1	1.1	0.0	-8.31
		54	1.1	0.1	-0.1	1.1	0.0	-9.42
		61	1.0	0.1	-0.1	1.1	0.0	-10.29
		60	1.0	0.2	-0.1	1.0	0.0	-9.00
	Min	Cent	-0.5	-0.0	-0.2	0.1	-0.5	-65.56
		53	-0.4	-0.1	-0.2	0.2	-0.5	-67.54
		54	-0.4	0.0	-0.2	0.1	-0.5	-80.12
		61	-0.5	0.0	-0.2	0.1	-0.5	-81.03
		60	-0.5	-0.1	-0.2	0.2	-0.5	-59.65

	NODE	Mxx	Myy	Mxy	Mmax	Mmin	ANGLE
Max	Cent	-3.8	2.3	-0.7	2.3	-3.8	-83.11
	53	-3.3	3.4	-0.8	3.5	-3.4	-83.00
	54	-4.1	3.4	-0.7	3.4	-4.2	-84.87
	61	-4.3	1.1	-0.6	1.2	-4.4	-83.29
	60	-3.3	1.1	-0.7	1.3	-3.5	-76.96
Min	Cent	-7.8	1.7	-1.6	1.9	-8.1	-83.49
	53	-7.3	2.8	-1.7	2.9	-7.5	-83.60
	54	-8.0	2.8	-1.7	2.9	-8.2	-83.52
	61	-8.6	0.6	-1.6	0.8	-8.8	-83.39
	60	-7.5	0.7	-1.6	0.8	-7.7	-82.50

	NODE	Vxx	Vyy
Max	Cent	2.5	4.0
	53	2.2	4.1
	54	2.2	4.0
	61	2.9	4.0
	60	2.9	4.1
Min	Cent	1.1	3.6
	53	0.8	3.7
	54	0.8	3.6
	61	1.3	3.6
	60	1.3	3.7

ELEM	MAT	SEC	LC		NODE	Fxx	Fyy	Fxy	Fmax	Fmin	ANGLE
54	1	1	SX (RS)		Cent	1.1	0.1	0.4	1.2	-0.1	19.70
					54	0.9	0.1	0.4	1.1	-0.0	23.56
					55	0.9	0.2	0.4	1.1	0.0	24.39
					62	1.3	0.2	0.4	1.4	0.0	18.75
					61	1.3	0.1	0.4	1.4	0.0	18.21

	NODE	Mxx	Myy	Mxy	Mmax	Mmin	ANGLE
	Cent	1.8	0.2	0.2	1.8	0.2	7.60
	54	2.3	0.3	0.2	2.4	0.2	6.37
	55	1.2	0.2	0.2	1.3	0.2	10.10
	62	1.2	0.2	0.2	1.2	0.2	11.13
	61	2.4	0.2	0.2	2.4	0.2	6.59

	NODE	Vxx	Vyy
	Cent	2.0	0.1
	54	1.9	0.1
	55	1.9	0.1
	62	2.1	0.1
	61	2.1	0.1

LC		NODE	Fxx	Fyy	Fxy	Fmax	Fmin	ANGLE

```
      SY (RS)   Cent        1.9        0.4        0.6        2.1        0.2      18.59
                  54        1.6        0.4        0.6        1.9        0.2      22.56
                  55        1.6        0.3        0.6        1.9        0.1      21.17
                  62        2.3        0.3        0.6        2.4        0.1      15.67
                  61        2.3        0.4        0.6        2.5        0.3      16.49

                NODE        Mxx        Myy        Mxy       Mmax       Mmin      ANGLE
           ---- ------ ---------- ---------- ---------- ---------- ---------- ----------
                Cent        1.2        1.1        1.4        2.6       -0.2      43.56
                  54        1.1        1.2        1.3        2.5       -0.1      46.26
                  55        1.0        1.6        1.4        2.7       -0.1      50.40
                  62        1.3        0.7        1.5        2.6       -0.5      39.62
                  61        1.6        0.9        1.4        2.7       -0.2      38.08

                NODE        Vxx        Vyy
           ---- ------ ---------- ----------
                Cent        0.6        1.2
                  54        0.9        0.8
                  55        0.9        1.7
                  62        0.4        1.7
                  61        0.4        0.8


       LC        NODE        Fxx        Fyy        Fxy       Fmax       Fmin      ANGLE
-------- ---- ------ ---------- ---------- ---------- ---------- ---------- ----------
RC ENV~1  Max   Cent        2.0        0.4        0.6        2.2        0.2      17.57
                  54        1.8        0.5        0.6        2.0        0.3      20.68
                  55        1.8        0.4        0.6        2.0        0.3      20.13
                  62        2.4        0.4        0.6        2.5        0.3      15.17
                  61        2.4        0.5        0.6        2.5        0.3      15.51
           Min   Cent       -1.8       -0.3       -0.6       -0.1       -2.1     -70.40
                  54       -1.5       -0.4       -0.6       -0.1       -1.8     -65.53
                  55       -1.5       -0.2       -0.6        0.1       -1.8     -67.82
                  62       -2.2       -0.2       -0.6       -0.0       -2.4     -73.86
                  61       -2.2       -0.4       -0.6       -0.2       -2.4     -72.53

                NODE        Mxx        Myy        Mxy       Mmax       Mmin      ANGLE
           ---- ------ ---------- ---------- ---------- ---------- ---------- ----------
           Max   Cent       -2.4        3.4        0.9        3.6       -2.4      81.75
                  54       -2.0        4.6        0.7        4.6       -2.0      84.66
                  55       -2.8        5.1        1.0        5.2       -2.8      82.98
                  62       -2.7        2.1        1.2        2.4       -2.9      77.20
                  61       -2.0        2.0        0.9        2.2       -2.0      79.87
           Min   Cent      -11.2        1.2       -2.3        1.7      -11.5     -75.40
                  54      -11.7        2.1       -2.4        2.6      -12.0     -76.78
                  55      -10.3        2.0       -2.3        2.4      -10.6     -76.16
                  62      -11.1        0.6       -2.2        1.2      -11.5     -74.15
                  61      -11.7        0.2       -2.3        0.8      -12.1     -74.21

                NODE        Vxx        Vyy
           ---- ------ ---------- ----------
           Max   Cent        1.5        5.2
                  54        1.4        5.1
                  55        1.4        5.6
                  62        1.6        5.6
                  61        1.6        5.1
           Min   Cent       -2.5        2.7
                  54       -2.5        3.2
                  55       -2.5        2.2
                  62       -2.5        2.2
                  61       -2.5        3.2


       LC        NODE        Fxx        Fyy        Fxy       Fmax       Fmin      ANGLE
-------- ---- ------ ---------- ---------- ---------- ---------- ---------- ----------
RC ENV~2  Max   Cent        0.7        0.1        0.0        0.8        0.1      -8.51
                  54        0.7        0.1        0.0        0.7        0.1      -7.58
                  55        0.7        0.2        0.0        0.8        0.2     -10.13
                  62        0.8        0.2        0.0        0.8        0.2      -9.68
                  61        0.8        0.1        0.0        0.8        0.0      -7.32
           Min   Cent       -0.3        0.1       -0.1        0.1       -0.3      87.00
                  54       -0.3       -0.0       -0.1        0.1       -0.3     -80.92
                  55       -0.3        0.1       -0.1        0.1       -0.3      86.45
                  62       -0.4        0.1       -0.1        0.1       -0.4      87.30
                  61       -0.4       -0.0       -0.1        0.0       -0.4     -75.76

                NODE        Mxx        Myy        Mxy       Mmax       Mmin      ANGLE
           ---- ------ ---------- ---------- ---------- ---------- ---------- ----------
           Max   Cent       -4.1        2.4       -0.4        2.4       -4.1     -86.11
```

54	-4.2	3.3	-0.5	3.4	-4.3	-85.86
55	-3.9	3.6	-0.4	3.6	-4.0	-86.96
62	-4.0	1.4	-0.3	1.4	-4.0	-86.49
61	-4.3	1.1	-0.5	1.2	-4.3	-84.61
Min Cent	-7.9	1.8	-1.5	1.9	-8.1	-83.45
54	-8.2	2.7	-1.6	2.9	-8.4	-83.80
55	-7.2	2.9	-1.5	3.0	-7.4	-83.92
62	-7.8	0.9	-1.5	1.1	-8.0	-83.08
61	-8.2	0.7	-1.5	0.8	-8.4	-83.55

	NODE	Vxx	Vyy
Max	Cent	0.1	4.0
	54	-0.2	4.0
	55	-0.2	3.9
	62	0.4	3.9
	61	0.4	4.0
Min	Cent	-1.4	3.6
	54	-1.6	3.6
	55	-1.6	3.5
	62	-1.2	3.5
	61	-1.2	3.6

ELEM	MAT	SEC	LC		NODE	Fxx	Fyy	Fxy	Fmax	Fmin	ANGLE
55	1	1	SX (RS)		Cent	0.6	0.2	0.4	0.9	-0.1	33.99
					55	0.5	0.1	0.4	0.8	-0.2	33.18
					56	0.5	0.4	0.4	0.9	-0.0	41.88
					63	0.7	0.4	0.4	1.0	0.1	34.47
					62	0.7	0.1	0.4	0.9	-0.1	27.25

	NODE	Mxx	Myy	Mxy	Mmax	Mmin	ANGLE
	Cent	0.6	0.4	0.2	0.8	0.2	29.44
	55	1.3	0.2	0.2	1.3	0.2	7.91
	56	0.3	0.6	0.2	0.7	0.2	58.52
	63	0.3	0.6	0.3	0.8	0.1	57.22
	62	1.2	0.2	0.2	1.3	0.1	12.64

	NODE	Vxx	Vyy
	Cent	2.2	0.1
	55	2.1	0.1
	56	2.1	0.1
	63	2.3	0.1
	62	2.3	0.1

LC		NODE	Fxx	Fyy	Fxy	Fmax	Fmin	ANGLE
SY (RS)		Cent	2.2	0.3	0.9	2.6	-0.0	22.20
		55	1.9	0.3	0.9	2.3	-0.1	25.34
		56	1.9	0.3	0.9	2.3	-0.1	25.30
		63	2.6	0.3	0.9	2.9	0.0	19.64
		62	2.6	0.3	0.9	2.9	0.0	19.67

	NODE	Mxx	Myy	Mxy	Mmax	Mmin	ANGLE
	Cent	1.1	0.7	1.7	2.7	-0.9	41.12
	55	1.0	1.6	1.9	3.2	-0.6	49.04
	56	1.4	0.6	2.0	3.1	-1.1	39.36
	63	1.2	0.4	1.7	2.5	-0.9	38.72
	62	1.4	0.7	1.5	2.6	-0.5	38.69

	NODE	Vxx	Vyy
	Cent	1.1	0.6
	55	1.5	1.7
	56	1.5	0.7
	63	0.8	0.7
	62	0.8	1.7

LC		NODE	Fxx	Fyy	Fxy	Fmax	Fmin	ANGLE
RC ENV~1	Max	Cent	2.3	0.5	1.0	2.8	0.3	23.67
		55	1.9	0.4	1.0	2.4	0.2	26.77
		56	1.9	0.5	1.0	2.4	0.4	27.09

		63	2.7	0.5	1.0	3.1	0.4	21.08
		62	2.7	0.4	1.0	3.1	0.2	20.86
	Min	Cent	-2.2	-0.2	-0.9	0.1	-2.5	-69.35
		55	-1.8	-0.2	-0.9	0.1	-2.2	-66.21
		56	-1.8	-0.2	-0.9	0.0	-2.2	-51.75
		63	-2.5	-0.2	-0.9	-0.0	-2.8	-59.21
		62	-2.5	-0.2	-0.9	0.0	-2.8	-71.59

		NODE	Mxx	Myy	Mxy	Mmax	Mmin	ANGLE
	Max	Cent	-2.2	3.6	1.7	3.9	-2.6	74.81
		55	-2.9	5.1	1.6	5.4	-2.9	79.57
		56	-1.2	5.8	2.0	5.9	-1.8	-84.23
		63	-1.3	2.5	1.8	3.1	-2.0	67.68
		62	-2.7	2.1	1.4	2.4	-2.9	74.86
	Min	Cent	-8.8	2.1	-2.1	2.5	-9.1	-87.17
		55	-10.8	1.9	-2.3	2.5	-11.1	-74.42
		56	-6.8	3.8	-2.1	3.9	-7.2	-87.57
		63	-7.5	1.4	-1.9	1.4	-7.9	-87.32
		62	-10.5	0.6	-2.1	1.1	-10.8	-75.83

		NODE	Vxx	Vyy
	Max	Cent	-0.4	5.5
		55	-0.5	5.6
		56	-0.5	5.9
		63	-0.4	5.9
		62	-0.4	5.6
	Min	Cent	-6.3	3.6
		55	-6.7	2.2
		56	-6.7	3.8
		63	-6.0	3.8
		62	-6.0	2.2

LC		NODE	Fxx	Fyy	Fxy	Fmax	Fmin	ANGLE
RC ENV~2	Max	Cent	0.5	0.2	0.2	0.5	0.2	11.94
		55	0.4	0.2	0.2	0.4	0.1	11.89
		56	0.4	0.3	0.2	0.4	0.3	45.95
		63	0.5	0.3	0.2	0.6	0.3	11.99
		62	0.5	0.2	0.2	0.5	0.1	7.42
	Min	Cent	-0.1	0.1	0.0	0.1	-0.2	61.91
		55	-0.1	0.1	0.0	0.2	-0.1	57.81
		56	-0.1	0.0	0.0	0.1	-0.2	58.08
		63	-0.1	0.0	0.0	0.1	-0.2	61.15
		62	-0.1	0.1	0.0	0.2	-0.2	65.16

		NODE	Mxx	Myy	Mxy	Mmax	Mmin	ANGLE
	Max	Cent	-3.3	2.8	-0.1	2.8	-3.3	-84.85
		55	-4.1	3.5	-0.3	3.5	-4.1	-87.87
		56	-2.5	4.5	-0.0	4.5	-2.5	-85.21
		63	-2.4	2.0	0.1	2.0	-2.4	-85.19
		62	-4.1	1.4	-0.1	1.4	-4.1	-88.77
	Min	Cent	-6.1	2.3	-1.3	2.5	-6.3	-84.08
		55	-7.6	2.9	-1.5	3.0	-7.8	-83.99
		56	-4.8	4.0	-1.3	4.1	-5.0	-84.04
		63	-5.2	1.5	-1.2	1.6	-5.4	-83.06
		62	-7.4	0.9	-1.3	1.1	-7.5	-83.98

		NODE	Vxx	Vyy
	Max	Cent	-2.5	4.3
		55	-2.5	3.9
		56	-2.5	4.6
		63	-2.4	4.6
		62	-2.4	3.9
	Min	Cent	-4.5	3.9
		55	-4.8	3.5
		56	-4.8	4.4
		63	-4.4	4.4
		62	-4.4	3.5

ELEM	MAT	SEC	LC		NODE	Fxx	Fyy	Fxy	Fmax	Fmin	ANGLE
56	1	1	SX (RS)		Cent	0.9	0.4	0.4	1.2	0.2	29.23
					56	1.2	0.2	0.4	1.4	0.1	18.68

```
                    57        1.2        0.7        0.4        1.5        0.5      27.50
                    64        0.7        0.7        0.4        1.1        0.3      46.13
                    63        0.7        0.2        0.4        0.9       -0.0      30.14

              NODE        Mxx        Myy        Mxy       Mmax       Mmin      ANGLE
         ---- ------ ---------- ---------- ---------- ---------- ---------- ----------
              Cent        0.9        0.7        0.4        1.3        0.4      37.82
                56        0.4        0.5        0.4        0.8        0.1      46.91
                57        2.2        2.0        0.5        2.5        1.6      38.78
                64        1.5        0.3        0.4        1.7        0.1      17.08
                63        0.3        0.6        0.3        0.8        0.1      55.90

              NODE        Vxx        Vyy
         ---- ------ ---------- ----------
              Cent        3.3        1.9
                56        4.0        0.1
                57        4.0        3.8
                64        2.6        3.8
                63        2.6        0.1


      LC        NODE        Fxx        Fyy        Fxy       Fmax       Fmin      ANGLE
-------- ---- ------ ---------- ---------- ---------- ---------- ---------- ----------
      SY (RS)   Cent        2.4        1.3        1.3        3.2        0.5      33.57
                56        2.1        0.4        1.3        2.7       -0.3      28.13
                57        2.1        2.5        1.3        3.6        1.0      49.61
                64        2.7        2.5        1.3        3.9        1.3      42.20
                63        2.7        0.4        1.3        3.3       -0.2      23.57

              NODE        Mxx        Myy        Mxy       Mmax       Mmin      ANGLE
         ---- ------ ---------- ---------- ---------- ---------- ---------- ----------
              Cent        1.8        1.3        1.6        3.2       -0.1      40.03
                56        1.3        0.6        1.0        2.0       -0.1      34.04
                57        1.1        8.4        0.6        8.4        1.0      85.01
                64        4.8        3.5        1.8        6.0        2.2      35.07
                63        1.3        0.5        2.1        3.1       -1.3      39.12

              NODE        Vxx        Vyy
         ---- ------ ---------- ----------
              Cent        4.5        9.6
                56        2.1        0.7
                57        2.1       19.9
                64        6.8       19.9
                63        6.8        0.7


      LC        NODE        Fxx        Fyy        Fxy       Fmax       Fmin      ANGLE
-------- ---- ------ ---------- ---------- ---------- ---------- ---------- ----------
RC ENV~1  Max   Cent        2.4        1.7        1.4        3.5        0.6      38.00
                56        2.1        0.5        1.4        3.0        0.0      30.56
                57        2.1        3.1        1.4        4.1        1.1      54.44
                64        2.7        3.1        1.4        4.4        1.5      48.43
                63        2.7        0.5        1.4        3.5        0.1      26.14
          Min   Cent       -2.4       -0.9       -1.1       -0.4       -3.0     -61.52
                56       -2.0       -0.2       -1.1       -0.0       -2.6     -79.40
                57       -2.0       -1.9       -1.1       -0.9       -3.0     -47.19
                64       -2.7       -1.9       -1.1       -1.1       -3.5     -55.60
                63       -2.7       -0.2       -1.1        0.0       -3.1     -71.10

              NODE        Mxx        Myy        Mxy       Mmax       Mmin      ANGLE
         ---- ------ ---------- ---------- ---------- ---------- ---------- ----------
          Max   Cent        0.6        5.0        2.2        5.9       -0.3      67.04
                56       -1.7        5.6        1.2        5.7       -2.0     -86.82
                57        2.0       13.4        1.4       13.6        1.7      83.54
                64        5.9        6.8        2.8        9.2        3.5      49.90
                63       -1.3        2.6        2.6        3.7       -2.5      62.79
          Min   Cent       -4.3        2.4       -1.4        2.5       -4.5     -79.82
                56       -7.7        3.7       -1.7        3.8       -7.9     -85.24
                57       -2.4       -3.3       -1.2       -1.2       -3.4       4.15
                64       -3.7       -0.1       -1.0        0.0       -3.9     -77.56
                63       -6.9        1.3       -1.7        1.3       -7.2      88.40

              NODE        Vxx        Vyy
         ---- ------ ---------- ----------
          Max   Cent       -1.1       13.6
                56       -0.9        5.9
                57       -0.9       23.4
                64        0.6       23.4
                63        0.6        5.9
```

	Min	Cent	-12.7	-5.6
		56	-12.8	3.8
		57	-12.8	-16.3
		64	-13.2	-16.3
		63	-13.2	3.8

LC		NODE	Fxx	Fyy	Fxy	Fmax	Fmin	ANGLE
RC ENV~2	Max	Cent	0.2	0.7	0.3	0.8	0.1	67.33
		56	0.2	0.3	0.3	0.5	-0.0	45.81
		57	0.2	1.2	0.3	1.2	0.1	75.67
		64	0.2	1.2	0.3	1.3	0.2	73.97
		63	0.2	0.3	0.3	0.5	0.0	49.18
	Min	Cent	0.0	0.3	0.2	0.4	-0.1	53.95
		56	-0.0	0.1	0.2	0.3	-0.2	55.52
		57	-0.0	0.5	0.2	0.6	-0.1	60.47
		64	0.0	0.5	0.2	0.5	-0.1	67.66
		63	0.0	0.1	0.2	0.3	-0.2	53.98

		NODE	Mxx	Myy	Mxy	Mmax	Mmin	ANGLE
	Max	Cent	-1.1	3.8	0.6	3.8	-1.2	89.59
		56	-3.1	4.3	0.3	4.4	-3.1	-87.85
		57	0.5	5.8	0.8	5.8	0.5	88.11
		64	1.9	3.9	1.0	3.9	1.8	85.03
		63	-2.6	2.0	0.5	2.0	-2.7	-88.44
	Min	Cent	-2.9	3.3	-0.8	3.3	-3.0	-87.20
		56	-5.4	3.9	-1.1	4.0	-5.5	-86.29
		57	-1.2	4.3	-0.6	4.3	-1.3	-89.49
		64	-0.4	3.0	-0.5	3.0	-0.5	-84.12
		63	-4.9	1.6	-0.9	1.6	-5.0	-85.88

		NODE	Vxx	Vyy
	Max	Cent	-5.4	4.9
		56	-4.7	4.6
		57	-4.7	5.2
		64	-6.1	5.2
		63	-6.1	4.6
	Min	Cent	-9.1	3.0
		56	-9.0	4.4
		57	-9.0	1.6
		64	-9.6	1.6
		63	-9.6	4.4

ELEM	MAT	SEC	LC		NODE	Fxx	Fyy	Fxy	Fmax	Fmin	ANGLE
57	1	1	SX (RS)		Cent	2.4	0.1	1.2	2.9	-0.4	22.48
					57	5.7	0.4	1.2	6.0	0.1	11.88
					15	5.7	0.5	1.2	6.0	0.2	12.12
					65	0.9	0.5	1.2	1.9	-0.5	40.17
					64	0.9	0.4	1.2	1.8	-0.6	38.72

		NODE	Mxx	Myy	Mxy	Mmax	Mmin	ANGLE
		Cent	4.5	1.1	0.9	4.8	0.9	14.59
		57	2.1	2.0	1.0	3.1	1.0	42.94
		15	17.9	3.6	3.3	18.6	2.8	12.48
		65	3.7	0.7	3.5	6.1	-1.6	33.61
		64	1.8	0.2	0.8	2.2	-0.1	22.95

		NODE	Vxx	Vyy
		Cent	9.0	1.9
		57	27.7	3.8
		15	27.7	0.0
		65	9.7	0.0
		64	9.7	3.8

LC		NODE	Fxx	Fyy	Fxy	Fmax	Fmin	ANGLE
SY (RS)		Cent	2.5	3.4	3.3	6.3	-0.4	48.80
		57	2.0	2.5	3.3	5.6	-1.1	47.40
		15	2.0	9.3	3.3	10.6	0.7	68.82
		65	3.4	9.3	3.3	10.8	1.9	65.64
		64	3.4	2.5	3.3	6.3	-0.4	41.16

	NODE	Mxx	Myy	Mxy	Mmax	Mmin	ANGLE
	Cent	5.7	8.9	2.4	10.2	4.5	61.91
	57	1.2	8.5	7.9	13.5	-3.8	57.53
	15	12.6	37.9	7.2	39.8	10.7	75.16
	65	8.2	3.3	1.6	8.7	2.8	17.01
	64	2.7	3.0	1.0	3.9	1.8	49.84

	NODE	Vxx	Vyy
	Cent	8.5	20.6
	57	6.8	19.9
	15	6.8	61.0
	65	10.2	61.0
	64	10.2	19.9

LC		NODE	Fxx	Fyy	Fxy	Fmax	Fmin	ANGLE
RC ENV~1	Max	Cent	2.5	2.9	4.0	6.7	-0.8	46.23
		57	5.5	3.1	4.0	6.5	0.6	49.99
		15	5.5	7.6	4.0	9.6	-0.3	63.27
		65	3.7	7.6	4.0	10.1	1.2	58.15
		64	3.7	3.1	4.0	7.4	-0.0	42.98
	Min	Cent	-2.5	-4.0	-2.7	-0.4	-6.0	-74.34
		57	-6.0	-1.9	-2.7	0.3	-6.0	-84.96
		15	-6.0	-11.0	-2.7	-2.1	-11.7	-81.91
		65	-3.2	-11.0	-2.7	-2.3	-11.8	-17.40
		64	-3.2	-1.9	-2.7	0.3	-5.3	-51.44

	NODE	Mxx	Myy	Mxy	Mmax	Mmin	ANGLE
Max	Cent	9.3	15.2	4.1	17.3	8.7	62.76
	57	-0.2	13.2	8.7	17.3	-0.7	64.64
	15	29.9	55.5	7.8	57.4	28.3	76.59
	65	11.3	2.8	5.4	12.5	1.6	19.70
	64	4.2	6.5	3.1	8.6	2.1	54.99
Min	Cent	-2.2	-2.6	-0.6	-1.8	-3.1	-34.78
	57	-4.7	-3.9	-7.0	2.7	-10.7	-88.79
	15	-5.9	-20.2	-6.6	1.4	-22.2	-16.93
	65	-5.2	-3.9	-1.7	-3.8	-5.2	82.37
	64	-1.2	0.4	0.3	1.0	-1.7	62.98

	NODE	Vxx	Vyy
Max	Cent	-3.6	37.2
	57	6.7	23.4
	15	6.7	90.7
	65	6.1	90.7
	64	6.1	23.4
Min	Cent	-28.1	-3.9
	57	-48.9	-16.3
	15	-48.9	-31.3
	65	-14.4	-31.3
	64	-14.4	-16.3

LC		NODE	Fxx	Fyy	Fxy	Fmax	Fmin	ANGLE
RC ENV~2	Max	Cent	0.6	-0.5	1.3	0.9	-0.6	27.42
		57	1.1	1.1	1.3	1.7	0.4	53.98
		15	1.1	-1.6	1.3	1.2	-1.7	7.46
		65	0.9	-1.6	1.3	1.3	-1.7	18.42
		64	0.9	1.1	1.3	2.3	-0.1	47.66
	Min	Cent	-0.5	-0.9	0.4	0.4	-1.9	36.14
		57	-1.8	0.6	0.4	0.9	-2.3	64.74
		15	-1.8	-2.9	0.4	-0.8	-3.6	39.35
		65	0.1	-2.9	0.4	0.2	-3.3	11.68
		64	0.1	0.6	0.4	0.8	-0.3	61.29

	NODE	Mxx	Myy	Mxy	Mmax	Mmin	ANGLE
Max	Cent	6.6	7.9	1.9	8.4	6.1	62.63
	57	-2.0	5.4	1.0	5.4	-2.0	85.89
	15	21.1	24.0	0.8	24.4	20.6	-69.32
	65	6.2	-0.3	2.1	6.6	-0.5	14.43
	64	2.7	4.0	2.2	5.4	1.4	53.68
Min	Cent	2.6	6.0	0.1	6.2	2.3	81.52

57	-3.4	3.8	-0.8	3.9	-3.5	-86.89
15	8.5	17.1	-1.7	17.1	8.5	86.13
65	2.3	-0.9	-0.5	2.3	-1.4	-3.69
64	0.7	3.2	0.5	3.4	0.1	78.66

	NODE	Vxx	Vyy
Max	Cent	-12.1	21.1
	57	-16.7	5.2
	15	-16.7	39.9
	65	-2.3	39.9
	64	-2.3	5.2
Min	Cent	-20.2	16.3
	57	-35.0	1.6
	15	-35.0	28.7
	65	-9.2	28.7
	64	-9.2	1.6

ELEM	MAT	SEC	LC		NODE	Fxx	Fyy	Fxy	Fmax	Fmin	ANGLE
58	1	1	SX (RS)		Cent	1.0	0.1	0.3	1.0	0.1	15.78
					34	0.3	0.1	0.3	0.5	-0.1	32.44
					58	0.3	0.4	0.3	0.6	0.1	46.91
					66	1.8	0.4	0.3	1.8	0.3	10.01
					25	1.8	0.1	0.3	1.8	0.1	8.48

	NODE	Mxx	Myy	Mxy	Mmax	Mmin	ANGLE
	Cent	2.8	0.1	0.3	2.8	0.1	6.16
	34	3.7	1.3	0.9	4.0	1.0	17.91
	58	6.0	1.3	0.5	6.1	1.3	6.02
	66	4.0	0.3	0.5	4.0	0.2	7.51
	25	4.4	0.5	0.9	4.6	0.3	11.78

	NODE	Vxx	Vyy
	Cent	7.9	1.0
	34	16.3	0.3
	58	16.3	2.2
	66	0.8	2.2
	25	0.8	0.3

LC		NODE	Fxx	Fyy	Fxy	Fmax	Fmin	ANGLE
SY (RS)		Cent	1.0	0.6	0.7	1.5	0.1	38.27
		34	0.6	1.0	0.7	1.6	0.1	53.94
		58	0.6	0.2	0.7	1.1	-0.3	37.49
		66	1.3	0.2	0.7	1.7	-0.1	25.66
		25	1.3	1.0	0.7	1.9	0.5	39.09

	NODE	Mxx	Myy	Mxy	Mmax	Mmin	ANGLE
	Cent	1.5	0.5	0.6	1.8	0.3	24.42
	34	2.8	1.4	0.4	2.9	1.3	16.29
	58	0.8	0.7	0.6	1.4	0.1	43.71
	66	0.8	0.1	0.7	1.2	-0.3	32.52
	25	2.4	0.2	0.5	2.5	0.1	11.95

	NODE	Vxx	Vyy
	Cent	3.8	1.9
	34	5.0	2.6
	58	5.0	1.3
	66	3.0	1.3
	25	3.0	2.6

LC		NODE	Fxx	Fyy	Fxy	Fmax	Fmin	ANGLE
RC ENV~1	Max	Cent	1.7	0.5	0.5	1.8	0.3	22.55
		34	1.0	0.8	0.5	1.4	0.3	39.73
		58	1.0	0.4	0.5	1.3	0.4	27.92
		66	2.6	0.4	0.5	2.6	0.4	2.33
		25	2.6	0.8	0.5	2.6	0.6	1.85
	Min	Cent	-0.3	-0.7	-0.9	0.1	-1.4	-47.55
		34	-0.2	-1.3	-0.9	0.3	-1.8	-28.66
		58	-0.2	-0.3	-0.9	0.3	-1.1	-32.29

		66	-0.9	-0.3	-0.9	-0.1	-1.2	-61.74
		25	-0.9	-1.3	-0.9	-0.1	-1.9	-61.05

	NODE	Mxx	Myy	Mxy	Mmax	Mmin	ANGLE
Max	Cent	4.8	1.1	-0.2	4.9	1.1	-5.84
	34	7.3	2.5	0.2	7.3	2.5	2.34
	58	7.7	2.9	-0.4	7.7	2.8	-5.95
	66	5.5	0.3	-0.1	5.5	0.3	-2.48
	25	5.9	-0.0	0.5	6.0	-0.1	4.43
Min	Cent	-0.8	0.0	-1.6	1.1	-1.9	-59.95
	34	-0.1	-0.3	-1.6	1.4	-1.7	-44.35
	58	-4.4	0.2	-2.1	0.6	-4.9	-73.52
	66	-2.5	-0.2	-1.7	0.3	-3.0	-66.26
	25	-2.9	-1.0	-1.3	-0.9	-3.5	-71.22

	NODE	Vxx	Vyy
Max	Cent	9.9	4.4
	34	20.0	4.7
	58	20.0	4.9
	66	3.3	4.9
	25	3.3	4.7
Min	Cent	-5.9	0.5
	34	-12.5	-0.4
	58	-12.5	0.5
	66	-2.8	0.5
	25	-2.8	-0.4

LC		NODE	Fxx	Fyy	Fxy	Fmax	Fmin	ANGLE
RC ENV~2	Max	Cent	1.2	-0.0	-0.0	1.2	-0.0	-7.20
		34	0.7	-0.3	-0.0	0.8	-0.3	-14.72
		58	0.7	0.2	-0.0	0.8	0.2	-20.23
		66	1.8	0.2	-0.0	1.8	0.2	-5.94
		25	1.8	-0.3	-0.0	1.8	-0.3	-4.41
	Min	Cent	0.5	-0.2	-0.3	0.6	-0.3	-19.98
		34	0.3	-0.4	-0.3	0.3	-0.5	-2.24
		58	0.3	-0.1	-0.3	0.3	-0.2	-9.72
		66	0.4	-0.1	-0.3	0.5	-0.2	-22.60
		25	0.4	-0.4	-0.3	0.5	-0.5	-19.29

	NODE	Mxx	Myy	Mxy	Mmax	Mmin	ANGLE
Max	Cent	2.8	0.7	-0.7	3.0	0.4	-18.95
	34	4.7	1.6	-0.5	4.8	1.5	-9.86
	58	2.9	2.1	-1.0	3.6	1.4	-34.58
	66	2.2	0.2	-0.7	2.4	-0.2	-17.19
	25	2.9	-0.4	-0.2	3.1	-0.5	-10.52
Min	Cent	-0.2	0.4	-1.1	1.2	-1.0	-51.85
	34	2.3	0.8	-1.1	2.9	0.2	-28.42
	58	-1.8	0.8	-1.5	1.4	-2.4	-66.76
	66	-1.0	-0.0	-1.2	0.8	-1.8	-58.35
	25	-1.3	-0.7	-0.8	-0.5	-1.5	-54.08

	NODE	Vxx	Vyy
Max	Cent	5.6	3.1
	34	10.8	2.7
	58	10.8	3.7
	66	1.9	3.7
	25	1.9	2.7
Min	Cent	0.3	1.7
	34	-0.2	1.9
	58	-0.2	1.6
	66	-0.3	1.6
	25	-0.3	1.9

ELEM	MAT	SEC	LC		NODE	Fxx	Fyy	Fxy	Fmax	Fmin	ANGLE
59	1	1	SX (RS)		Cent	2.2	0.0	0.7	2.4	-0.2	16.23
					58	3.4	0.6	0.7	3.6	0.5	13.06
					59	3.4	0.5	0.7	3.6	0.4	12.79
					67	1.1	0.5	0.7	1.6	0.1	34.26
					66	1.1	0.6	0.7	1.6	0.1	35.49

	NODE	Mxx	Myy	Mxy	Mmax	Mmin	ANGLE

	Cent	4.9	0.4	0.6	5.0	0.3	7.46
	58	5.9	1.3	0.4	5.9	1.3	5.13
	59	4.6	0.3	0.6	4.7	0.2	7.76
	67	5.2	0.2	0.7	5.3	0.1	7.72
	66	4.0	0.3	0.5	4.0	0.2	7.67

	NODE	Vxx	Vyy
	Cent	0.4	1.3
	58	2.1	2.2
	59	2.1	0.5
	67	2.5	0.5
	66	2.5	2.2

LC		NODE	Fxx	Fyy	Fxy	Fmax	Fmin	ANGLE
SY (RS)		Cent	0.9	0.1	1.0	1.6	-0.6	34.75
		58	1.4	0.5	1.0	2.1	-0.1	32.92
		59	1.4	0.5	1.0	2.1	-0.2	32.03
		67	0.3	0.5	1.0	1.4	-0.6	47.66
		66	0.3	0.5	1.0	1.4	-0.6	48.73

	NODE	Mxx	Myy	Mxy	Mmax	Mmin	ANGLE
	Cent	0.8	0.2	0.9	1.5	-0.4	36.27
	58	1.2	0.9	0.9	2.0	0.1	41.24
	59	1.4	0.5	1.0	2.0	-0.1	32.04
	67	1.4	0.1	0.9	1.8	-0.3	26.40
	66	1.8	0.3	0.8	2.1	-0.1	24.36

	NODE	Vxx	Vyy
	Cent	3.8	0.5
	58	3.3	1.3
	59	3.3	0.7
	67	4.6	0.7
	66	4.6	1.3

LC		NODE	Fxx	Fyy	Fxy	Fmax	Fmin	ANGLE
RC ENV~1	Max	Cent	2.5	0.2	0.8	2.6	0.1	10.83
		58	3.7	0.6	0.8	3.7	0.5	8.72
		59	3.7	0.7	0.8	3.7	0.6	9.00
		67	1.5	0.7	0.8	1.7	0.5	25.07
		66	1.5	0.6	0.8	1.7	0.4	23.39
	Min	Cent	-1.9	-0.1	-1.2	0.4	-2.3	-68.40
		58	-3.2	-0.6	-1.2	-0.4	-3.5	-72.49
		59	-3.2	-0.4	-1.2	-0.1	-3.5	-73.65
		67	-0.7	-0.4	-1.2	0.4	-1.5	-49.46
		66	-0.7	-0.6	-1.2	0.2	-1.6	-45.74

	NODE	Mxx	Myy	Mxy	Mmax	Mmin	ANGLE
Max	Cent	4.6	1.0	-0.1	4.6	1.0	-6.62
	58	7.2	2.8	-0.2	7.3	2.7	-8.58
	59	2.7	1.6	-0.1	2.9	1.3	-17.38
	67	4.4	0.5	0.0	4.4	0.5	-2.16
	66	3.9	0.0	-0.1	4.0	0.0	-5.73
Min	Cent	-5.7	0.3	-2.2	0.7	-6.2	-74.78
	58	-4.6	0.2	-2.2	0.6	-5.0	-73.77
	59	-8.3	0.6	-2.3	1.1	-8.7	-77.84
	67	-6.5	0.1	-2.0	0.5	-6.8	-76.61
	66	-5.2	-0.6	-1.9	-0.1	-5.8	-70.36

	NODE	Vxx	Vyy
Max	Cent	7.9	3.6
	58	11.5	4.9
	59	11.5	2.6
	67	6.2	2.6
	66	6.2	4.9
Min	Cent	-0.2	0.9
	58	2.3	0.5
	59	2.3	1.1
	67	-3.1	1.1
	66	-3.1	0.5

LC		NODE	Fxx	Fyy	Fxy	Fmax	Fmin	ANGLE
RC ENV~2	Max	Cent	1.3	0.1	0.2	1.3	0.1	4.65
		58	1.9	0.3	0.2	1.9	0.3	3.62
		59	1.9	0.4	0.2	1.9	0.0	2.95
		67	0.8	0.4	0.2	1.0	0.1	-38.40
		66	0.8	0.3	0.2	0.9	0.2	-25.96
	Min	Cent	-0.4	0.0	-0.6	0.4	-0.8	-40.25
		58	-1.1	-0.3	-0.6	-0.0	-1.4	-63.53
		59	-1.1	-0.2	-0.6	0.4	-1.3	-57.66
		67	0.3	-0.2	-0.6	0.5	-0.2	-19.05
		66	0.3	-0.3	-0.6	0.5	-0.7	-17.01

	NODE	Mxx	Myy	Mxy	Mmax	Mmin	ANGLE
Max	Cent	0.1	0.8	-1.0	1.9	-0.7	-51.28
	58	2.6	2.1	-1.1	3.7	0.9	-39.70
	59	-1.6	1.1	-1.0	1.7	-1.9	-67.79
	67	-0.3	0.4	-0.8	1.3	-1.0	-52.78
	66	0.4	-0.2	-0.8	1.2	-0.9	-35.95
Min	Cent	-3.7	0.4	-1.6	0.7	-4.1	-75.80
	58	-2.0	0.8	-1.6	1.3	-2.6	-68.63
	59	-5.6	0.8	-1.6	1.1	-5.9	-79.84
	67	-4.3	0.3	-1.4	0.4	-4.6	-79.43
	66	-3.4	-0.4	-1.4	0.1	-3.8	-71.81

	NODE	Vxx	Vyy
Max	Cent	5.7	2.8
	58	8.3	3.7
	59	8.3	1.9
	67	3.3	1.9
	66	3.3	3.7
Min	Cent	3.3	1.5
	58	5.1	1.6
	59	5.1	1.4
	67	1.1	1.4
	66	1.1	1.6

ELEM	MAT	SEC	LC		NODE	Fxx	Fyy	Fxy	Fmax	Fmin	ANGLE
60	1	1	SX (RS)		Cent	2.3	0.3	0.2	2.4	0.3	4.69
					59	2.4	0.5	0.2	2.4	0.5	5.11
					60	2.4	0.0	0.2	2.4	0.0	4.07
					68	2.3	0.0	0.2	2.3	0.0	4.33
					67	2.3	0.5	0.2	2.3	0.5	5.52

	NODE	Mxx	Myy	Mxy	Mmax	Mmin	ANGLE
	Cent	4.1	0.2	0.5	4.2	0.1	7.54
	59	4.6	0.3	0.6	4.7	0.2	7.86
	60	3.4	0.3	0.5	3.5	0.2	8.93
	68	4.0	0.2	0.4	4.0	0.1	6.15
	67	4.4	0.0	0.5	4.4	-0.0	6.66

	NODE	Vxx	Vyy
	Cent	1.4	0.5
	59	2.1	0.5
	60	2.1	0.5
	68	1.1	0.5
	67	1.1	0.5

LC		NODE	Fxx	Fyy	Fxy	Fmax	Fmin	ANGLE
SY (RS)		Cent	1.9	0.1	0.4	1.9	0.0	11.73
		59	1.4	0.3	0.4	1.5	0.2	17.39
		60	1.4	0.2	0.4	1.5	0.1	16.22
		68	2.4	0.2	0.4	2.5	0.1	9.26
		67	2.4	0.3	0.4	2.5	0.2	9.66

	NODE	Mxx	Myy	Mxy	Mmax	Mmin	ANGLE
	Cent	1.4	0.3	1.1	2.1	-0.4	31.50
	59	1.2	0.4	1.0	2.0	-0.3	34.36

		60	1.5	0.6	1.1	2.2	-0.2	33.08
		68	2.2	0.3	1.1	2.7	-0.2	24.36
		67	1.8	0.3	1.1	2.3	-0.3	27.49

	NODE	Vxx	Vyy
	Cent	2.2	0.8
	59	0.5	0.7
	60	0.5	0.8
	68	4.6	0.8
	67	4.6	0.7

LC		NODE	Fxx	Fyy	Fxy	Fmax	Fmin	ANGLE
RC ENV~1	Max	Cent	2.5	0.3	0.3	2.5	0.3	2.88
		59	2.7	0.6	0.3	2.7	0.6	2.99
		60	2.7	0.2	0.3	2.7	0.1	2.33
		68	2.4	0.2	0.3	2.4	0.1	7.89
		67	2.4	0.6	0.3	2.4	0.6	8.60
	Min	Cent	-2.2	-0.2	-0.4	-0.2	-2.3	-83.43
		59	-2.2	-0.4	-0.4	-0.4	-2.2	-82.47
		60	-2.2	-0.2	-0.4	-0.0	-2.2	-83.83
		68	-2.5	-0.2	-0.4	-0.1	-2.5	-79.46
		67	-2.5	-0.4	-0.4	-0.4	-2.5	-82.99

	NODE	Mxx	Myy	Mxy	Mmax	Mmin	ANGLE
Max	Cent	1.4	0.8	0.4	1.5	0.7	-18.25
	59	2.9	1.6	0.2	2.9	1.4	-9.28
	60	-0.3	1.5	0.3	1.5	-0.3	84.71
	68	1.1	0.4	0.5	1.1	0.3	-16.12
	67	1.9	0.2	0.3	2.0	-0.0	-6.39
Min	Cent	-9.6	0.3	-2.1	0.6	-9.9	-80.07
	59	-7.9	0.7	-2.1	1.1	-8.2	-79.01
	60	-11.2	0.4	-2.1	0.8	-11.4	-81.05
	68	-9.6	-0.1	-1.8	0.2	-9.9	-81.52
	67	-9.8	-0.3	-1.9	-0.0	-10.1	-80.87

	NODE	Vxx	Vyy
Max	Cent	4.9	2.5
	59	7.4	2.6
	60	7.4	2.5
	68	5.5	2.5
	67	5.5	2.6
Min	Cent	-0.0	1.0
	59	1.3	1.1
	60	1.3	0.8
	68	-3.6	0.8
	67	-3.6	1.1

LC		NODE	Fxx	Fyy	Fxy	Fmax	Fmin	ANGLE
RC ENV~2	Max	Cent	1.2	0.2	0.0	1.2	0.0	1.16
		59	1.4	0.4	0.0	1.4	0.1	0.92
		60	1.4	0.0	0.0	1.4	-0.0	1.01
		68	0.9	0.0	0.0	0.9	-0.0	2.70
		67	0.9	0.4	0.0	0.9	0.1	2.30
	Min	Cent	-0.7	-0.1	-0.2	0.1	-0.7	-65.93
		59	-0.6	-0.2	-0.2	0.2	-0.7	-60.06
		60	-0.6	-0.0	-0.2	0.0	-0.7	-76.93
		68	-0.7	-0.0	-0.2	0.0	-0.8	-70.24
		67	-0.7	-0.2	-0.2	0.1	-0.8	-67.37

	NODE	Mxx	Myy	Mxy	Mmax	Mmin	ANGLE
Max	Cent	-2.4	0.6	-0.7	0.9	-2.6	-73.06
	59	-1.4	1.2	-0.8	1.7	-1.7	-68.66
	60	-3.5	1.0	-0.7	1.1	-3.6	-78.00
	68	-2.7	0.3	-0.6	0.6	-2.8	-76.63
	67	-2.1	-0.0	-0.7	0.3	-2.4	-69.93
Min	Cent	-6.6	0.4	-1.4	0.5	-6.8	-82.43
	59	-5.4	0.9	-1.5	1.0	-5.6	-81.03
	60	-7.8	0.6	-1.4	0.7	-7.9	-83.69
	68	-6.7	0.1	-1.3	0.2	-6.8	-83.38
	67	-6.7	-0.2	-1.3	0.0	-6.9	-81.87

	NODE	Vxx	Vyy
Max	Cent	3.5	1.8
	59	5.3	1.9
	60	5.3	1.7
	68	2.0	1.7
	67	2.0	1.9
Min	Cent	1.4	1.3
	59	3.2	1.4
	60	3.2	1.1
	68	-0.6	1.1
	67	-0.6	1.4

ELEM	MAT	SEC	LC		NODE	Fxx	Fyy	Fxy	Fmax	Fmin	ANGLE
61	1	1	SX	(RS)	Cent	2.0	0.0	0.1	2.0	0.0	2.77
					60	1.8	0.1	0.1	1.8	0.1	3.21
					61	1.8	0.0	0.1	1.8	0.0	3.10
					69	2.2	0.0	0.1	2.2	0.0	2.51
					68	2.2	0.1	0.1	2.2	0.1	2.58

	NODE	Mxx	Myy	Mxy	Mmax	Mmin	ANGLE
	Cent	3.0	0.1	0.3	3.0	0.1	6.11
	60	3.5	0.3	0.3	3.5	0.3	6.02
	61	2.3	0.1	0.3	2.4	0.1	7.16
	69	2.6	0.1	0.2	2.6	0.1	5.64
	68	3.4	0.0	0.3	3.4	0.0	5.13

	NODE	Vxx	Vyy
	Cent	1.7	0.3
	60	2.0	0.5
	61	2.0	0.2
	69	1.6	0.2
	68	1.6	0.5

LC		NODE	Fxx	Fyy	Fxy	Fmax	Fmin	ANGLE
SY	(RS)	Cent	2.4	0.2	0.2	2.4	0.2	4.92
		60	1.9	0.2	0.2	1.9	0.2	6.71
		61	1.9	0.1	0.2	1.9	0.1	6.26
		69	3.0	0.1	0.2	3.0	0.1	3.83
		68	3.0	0.2	0.2	3.0	0.2	3.99

	NODE	Mxx	Myy	Mxy	Mmax	Mmin	ANGLE
	Cent	1.6	0.3	1.2	2.3	-0.4	30.82
	60	1.5	0.5	1.1	2.2	-0.2	33.71
	61	1.5	0.6	1.1	2.3	-0.2	33.73
	69	2.1	0.2	1.2	2.7	-0.3	25.59
	68	2.2	0.3	1.1	2.7	-0.2	24.81

	NODE	Vxx	Vyy
	Cent	2.0	0.9
	60	0.4	0.8
	61	0.4	0.9
	69	4.4	0.9
	68	4.4	0.8

LC		NODE	Fxx	Fyy	Fxy	Fmax	Fmin	ANGLE
RC ENV~1	Max	Cent	2.4	0.2	0.2	2.4	0.2	4.11
		60	2.0	0.2	0.2	2.0	0.2	5.20
		61	2.0	0.1	0.2	2.0	0.1	4.98
		69	2.9	0.1	0.2	2.9	0.1	3.35
		68	2.9	0.2	0.2	2.9	0.2	3.45
	Min	Cent	-2.4	-0.2	-0.2	-0.2	-2.4	-84.28
		60	-1.8	-0.3	-0.2	-0.2	-1.8	-81.56
		61	-1.8	-0.1	-0.2	-0.1	-1.8	-82.36
		69	-3.1	-0.1	-0.2	-0.1	-3.1	-85.74
		68	-3.1	-0.3	-0.2	-0.2	-3.1	-85.50

	NODE	Mxx	Myy	Mxy	Mmax	Mmin	ANGLE

Max	Cent	-1.1	0.8	0.6	1.0	-1.1	79.48
	60	-0.1	1.5	0.5	1.6	-0.1	82.25
	61	-2.1	1.5	0.6	1.6	-2.1	82.36
	69	-1.3	0.4	0.7	0.7	-1.3	-78.75
	68	-0.7	0.2	0.6	0.4	-0.8	75.72
Min	Cent	-11.6	0.2	-2.0	0.5	-11.9	-83.34
	60	-10.7	0.4	-2.0	0.8	-11.0	-83.05
	61	-12.3	0.3	-2.0	0.8	-12.6	-76.04
	69	-10.5	-0.1	-1.9	0.2	-10.8	-83.79
	68	-13.0	-0.4	-1.9	-0.2	-13.2	-82.41

	NODE	Vxx	Vyy
Max	Cent	2.6	2.5
	60	4.1	2.5
	61	4.1	2.5
	69	4.0	2.5
	68	4.0	2.5
Min	Cent	-1.5	0.7
	60	-0.4	0.8
	61	-0.4	0.7
	69	-4.8	0.7
	68	-4.8	0.8

LC		NODE	Fxx	Fyy	Fxy	Fmax	Fmin	ANGLE
RC ENV~2	Max	Cent	0.9	0.0	-0.0	0.9	-0.0	-2.90
		60	1.0	0.0	-0.0	1.0	-0.0	-2.52
		61	1.0	0.0	-0.0	1.0	0.0	-2.78
		69	0.9	0.0	-0.0	0.9	0.0	-2.65
		68	0.9	0.0	-0.0	0.9	-0.0	-2.40
	Min	Cent	-0.7	-0.0	-0.1	0.0	-0.7	-83.40
		60	-0.5	-0.1	-0.1	0.0	-0.5	-72.67
		61	-0.5	0.0	-0.1	0.0	-0.5	-87.10
		69	-0.8	0.0	-0.1	0.0	-0.8	-88.12
		68	-0.8	-0.1	-0.1	-0.0	-0.8	-82.92

	NODE	Mxx	Myy	Mxy	Mmax	Mmin	ANGLE
Max	Cent	-3.9	0.5	-0.5	0.6	-3.9	-79.62
	60	-3.4	1.0	-0.6	1.1	-3.5	-78.68
	61	-4.4	0.9	-0.5	1.0	-4.4	-84.19
	69	-3.8	0.3	-0.4	0.5	-3.8	-79.22
	68	-4.0	-0.1	-0.5	0.0	-4.0	-82.09
Min	Cent	-8.1	0.3	-1.4	0.4	-8.3	-83.82
	60	-7.5	0.7	-1.4	0.8	-7.7	-83.65
	61	-8.6	0.6	-1.4	0.7	-8.8	-84.38
	69	-7.4	0.2	-1.3	0.2	-7.5	-84.34
	68	-9.0	-0.3	-1.3	-0.1	-9.1	-82.50

	NODE	Vxx	Vyy
Max	Cent	1.1	1.6
	60	2.9	1.7
	61	2.9	1.6
	69	-0.2	1.6
	68	-0.2	1.7
Min	Cent	-0.5	1.1
	60	1.3	1.1
	61	1.3	1.1
	69	-3.0	1.1
	68	-3.0	1.1

ELEM	MAT	SEC	LC		NODE	Fxx	Fyy	Fxy	Fmax	Fmin	ANGLE
62	1	1	SX (RS)		Cent	1.5	0.0	0.1	1.5	0.0	5.69
					61	1.3	0.1	0.1	1.3	0.1	6.97
					62	1.3	0.1	0.1	1.3	0.1	6.92
					70	1.7	0.1	0.1	1.7	0.1	5.18
					69	1.7	0.1	0.1	1.7	0.1	5.21

	NODE	Mxx	Myy	Mxy	Mmax	Mmin	ANGLE
	Cent	1.8	0.1	0.2	1.8	0.0	6.20
	61	2.4	0.1	0.2	2.4	0.1	5.40
	62	1.2	0.1	0.2	1.2	0.1	9.92
	70	1.3	0.1	0.1	1.3	0.0	6.93

```
                    69        2.3        0.0        0.2        2.3        0.0       4.39

                  NODE        Vxx        Vyy
            ---- ------ ---------- ----------
                  Cent        1.9        0.2
                    61        2.1        0.2
                    62        2.1        0.2
                    70        1.8        0.2
                    69        1.8        0.2


      LC        NODE        Fxx        Fyy        Fxy       Fmax       Fmin      ANGLE
-------- ---- ------ ---------- ---------- ---------- ---------- ---------- ----------
      SY (RS)   Cent        2.7        0.2        0.2        2.7        0.2       4.17
                    61        2.2        0.1        0.2        2.3        0.1       5.03
                    62        2.2        0.2        0.2        2.3        0.2       5.26
                    70        3.3        0.2        0.2        3.3        0.2       3.51
                    69        3.3        0.1        0.2        3.3        0.1       3.40

                  NODE        Mxx        Myy        Mxy       Mmax       Mmin      ANGLE
            ---- ------ ---------- ---------- ---------- ---------- ---------- ----------
                  Cent        1.5        0.3        1.3        2.4       -0.5      33.06
                    61        1.5        0.6        1.2        2.4       -0.3      34.49
                    62        1.3        0.5        1.3        2.2       -0.5      36.67
                    70        2.0        0.2        1.3        2.7       -0.5      27.99
                    69        2.4        0.3        1.3        3.0       -0.3      25.11

                  NODE        Vxx        Vyy
            ---- ------ ---------- ----------
                  Cent        2.7        0.8
                    61        0.4        0.9
                    62        0.4        0.7
                    70        5.3        0.7
                    69        5.3        0.9


      LC        NODE        Fxx        Fyy        Fxy       Fmax       Fmin      ANGLE
-------- ---- ------ ---------- ---------- ---------- ---------- ---------- ----------
RC ENV~1  Max   Cent        2.7        0.2        0.2        2.7        0.2       4.05
                    61        2.3        0.2        0.2        2.3        0.1       4.68
                    62        2.3        0.2        0.2        2.3        0.2       4.85
                    70        3.1        0.2        0.2        3.1        0.2       3.51
                    69        3.1        0.2        0.2        3.1        0.1       3.41
           Min   Cent       -2.8       -0.2       -0.2       -0.2       -2.8     -85.71
                    61       -2.2       -0.1       -0.2       -0.1       -2.2     -84.61
                    62       -2.2       -0.2       -0.2       -0.2       -2.2     -84.31
                    70       -3.4       -0.2       -0.2       -0.2       -3.4     -86.49
                    69       -3.4       -0.1       -0.2       -0.1       -3.4     -86.61

                  NODE        Mxx        Myy        Mxy       Mmax       Mmin      ANGLE
            ---- ------ ---------- ---------- ---------- ---------- ---------- ----------
           Max   Cent       -2.5        0.9        1.0        1.1       -2.5      75.52
                    61       -2.0        1.5        0.9        1.7       -2.0      79.37
                    62       -2.8        1.6        1.0        1.8       -2.9      77.56
                    70       -1.7        0.4        1.1        0.8       -2.1      67.07
                    69       -2.3        0.3        0.9        0.6       -2.4      72.88
           Min   Cent      -11.5        0.2       -2.0        0.5      -11.8     -85.46
                    61      -11.7        0.4       -1.9        0.8      -12.0     -76.45
                    62      -11.1        0.6       -1.9        1.0      -11.4     -85.80
                    70       -9.1       -0.1       -1.9        0.1       -9.4     -85.37
                    69      -14.0       -0.4       -1.9       -0.1      -14.2     -82.44

                  NODE        Vxx        Vyy
            ---- ------ ---------- ----------
           Max   Cent        1.6        2.5
                    61        1.6        2.5
                    62        1.6        2.6
                    70        3.6        2.6
                    69        3.6        2.5
           Min   Cent       -4.7        0.9
                    61       -2.5        0.7
                    62       -2.5        1.1
                    70       -8.5        1.1
                    69       -8.5        0.7


      LC        NODE        Fxx        Fyy        Fxy       Fmax       Fmin      ANGLE
-------- ---- ------ ---------- ---------- ---------- ---------- ---------- ----------
RC ENV~2  Max   Cent        0.7        0.0        0.0        0.7        0.0      -2.71
```

		61	0.7	0.1	0.0	0.7	0.0	-2.46
		62	0.7	0.0	0.0	0.7	0.0	-2.59
		70	0.6	0.0	0.0	0.6	0.0	-3.07
		69	0.6	0.1	0.0	0.6	0.0	-2.85
	Min	Cent	-0.5	0.0	-0.0	0.0	-0.5	-88.25
		61	-0.4	-0.0	-0.0	0.0	-0.4	-85.71
		62	-0.4	-0.0	-0.0	-0.0	-0.4	88.33
		70	-0.7	-0.0	-0.0	-0.0	-0.7	89.19
		69	-0.7	-0.0	-0.0	0.0	-0.7	-71.83

	NODE	Mxx	Myy	Mxy	Mmax	Mmin	ANGLE
Max	Cent	-4.1	0.6	-0.3	0.6	-4.2	-81.14
	61	-4.3	0.9	-0.3	1.0	-4.3	-85.83
	62	-4.1	1.1	-0.2	1.1	-4.1	-87.12
	70	-3.6	0.3	-0.2	0.5	-3.7	-78.88
	69	-4.6	0.0	-0.3	0.0	-4.6	-85.41
Min	Cent	-8.0	0.4	-1.3	0.5	-8.2	-83.51
	61	-8.2	0.7	-1.3	0.8	-8.4	-84.64
	62	-7.8	0.7	-1.3	0.9	-7.9	-84.13
	70	-6.4	0.1	-1.2	0.2	-6.6	-86.36
	69	-9.7	-0.2	-1.3	-0.1	-9.9	-82.76

	NODE	Vxx	Vyy
Max	Cent	-1.0	1.7
	61	0.4	1.6
	62	0.4	1.9
	70	-1.6	1.9
	69	-1.6	1.6
Min	Cent	-3.2	1.2
	61	-1.2	1.1
	62	-1.2	1.4
	70	-5.7	1.4
	69	-5.7	1.1

ELEM	MAT	SEC	LC		NODE	Fxx	Fyy	Fxy	Fmax	Fmin	ANGLE
63	1	1	SX	(RS)	Cent	0.9	0.1	0.1	1.0	0.1	9.42
					62	0.7	0.0	0.1	0.7	0.0	11.32
					63	0.7	0.3	0.1	0.7	0.2	16.69
					71	1.2	0.3	0.1	1.2	0.3	8.50
					70	1.2	0.0	0.1	1.2	0.0	6.77

NODE	Mxx	Myy	Mxy	Mmax	Mmin	ANGLE
Cent	0.5	0.1	0.2	0.6	0.0	23.25
62	1.2	0.1	0.2	1.3	0.1	11.55
63	0.3	0.2	0.3	0.5	-0.0	41.79
71	0.1	0.0	0.2	0.3	-0.1	37.01
70	1.0	0.1	0.1	1.0	0.0	9.22

NODE	Vxx	Vyy
Cent	2.1	0.3
62	2.3	0.2
63	2.3	0.3
71	1.8	0.3
70	1.8	0.2

LC		NODE	Fxx	Fyy	Fxy	Fmax	Fmin	ANGLE
SY	(RS)	Cent	3.0	0.2	0.4	3.0	0.1	7.91
		62	2.6	0.2	0.4	2.6	0.1	9.02
		63	2.6	0.4	0.4	2.6	0.4	9.93
		71	3.4	0.4	0.4	3.4	0.4	7.35
		70	3.4	0.2	0.4	3.4	0.1	6.83

NODE	Mxx	Myy	Mxy	Mmax	Mmin	ANGLE
Cent	1.3	0.2	1.4	2.3	-0.8	34.41
62	1.4	0.5	1.4	2.4	-0.6	36.12
63	1.1	0.3	1.3	2.1	-0.7	35.78
71	2.8	0.5	1.3	3.4	-0.1	23.97
70	2.1	0.3	1.4	2.9	-0.4	28.75

NODE Vxx Vyy

Cent	4.0	0.6
62	0.8	0.7
63	0.8	0.5
71	7.2	0.5
70	7.2	0.7

LC		NODE	Fxx	Fyy	Fxy	Fmax	Fmin	ANGLE
RC ENV~1	Max	Cent	2.9	0.3	0.4	3.0	0.2	8.97
		62	2.7	0.2	0.4	2.7	0.1	9.67
		63	2.7	0.5	0.4	2.7	0.5	11.14
		71	3.3	0.5	0.4	3.4	0.5	8.75
		70	3.3	0.2	0.4	3.3	0.1	7.80
	Min	Cent	-3.0	-0.1	-0.3	-0.1	-3.0	-83.11
		62	-2.5	-0.2	-0.3	-0.1	-2.6	-81.68
		63	-2.5	-0.3	-0.3	-0.2	-2.6	-81.26
		71	-3.5	-0.3	-0.3	-0.3	-3.5	-83.88
		70	-3.5	-0.2	-0.3	-0.1	-3.5	-84.10

	NODE	Mxx	Myy	Mxy	Mmax	Mmin	ANGLE
Max	Cent	-1.9	0.9	1.5	1.5	-2.6	67.19
	62	-2.8	1.5	1.4	1.9	-2.9	73.97
	63	-1.4	1.9	1.5	2.4	-2.0	68.59
	71	0.5	0.7	1.4	2.1	-0.8	46.69
	70	-1.8	0.5	1.3	1.1	-2.4	65.19
Min	Cent	-8.8	0.5	-1.8	0.6	-9.1	-87.83
	62	-10.5	0.6	-1.8	1.0	-10.7	-77.43
	63	-7.6	1.2	-1.6	1.3	-7.8	-88.30
	71	-5.2	-0.2	-1.7	0.1	-5.7	-77.18
	70	-12.4	-0.3	-1.9	-0.1	-12.7	-81.41

	NODE	Vxx	Vyy
Max	Cent	1.1	2.7
	62	-0.4	2.6
	63	-0.4	3.0
	71	4.3	3.0
	70	4.3	2.6
Min	Cent	-9.3	1.5
	62	-6.0	1.1
	63	-6.0	1.9
	71	-13.0	1.9
	70	-13.0	1.1

LC		NODE	Fxx	Fyy	Fxy	Fmax	Fmin	ANGLE
RC ENV~2	Max	Cent	0.5	0.1	0.1	0.5	0.1	10.23
		62	0.5	0.0	0.1	0.5	-0.0	7.30
		63	0.5	0.3	0.1	0.5	0.2	13.47
		71	0.5	0.3	0.1	0.5	0.2	10.16
		70	0.5	0.0	0.1	0.5	-0.0	5.89
	Min	Cent	-0.3	0.0	0.0	0.0	-0.3	82.76
		62	-0.1	-0.0	0.0	0.0	-0.1	75.27
		63	-0.1	0.0	0.0	0.1	-0.1	77.62
		71	-0.4	0.0	0.0	0.1	-0.4	85.25
		70	-0.4	-0.0	0.0	0.0	-0.4	78.93

	NODE	Mxx	Myy	Mxy	Mmax	Mmin	ANGLE
Max	Cent	-3.2	0.7	0.1	0.8	-3.2	-81.05
	62	-4.1	1.1	-0.0	1.1	-4.1	-89.71
	63	-2.5	1.5	0.2	1.5	-2.5	87.39
	71	-2.3	0.4	0.2	0.7	-2.3	-76.21
	70	-3.9	0.1	-0.0	0.1	-3.9	-89.27
Min	Cent	-6.1	0.6	-1.1	0.7	-6.3	-84.20
	62	-7.4	0.8	-1.1	0.9	-7.5	-85.03
	63	-5.2	1.2	-1.0	1.3	-5.4	-84.14
	71	-3.7	0.2	-1.1	0.2	-3.9	87.26
	70	-8.6	-0.2	-1.2	-0.0	-8.7	-82.07

	NODE	Vxx	Vyy
Max	Cent	-2.7	2.1
	62	-2.4	1.9
	63	-2.4	2.4

					71	-2.8	2.4				
					70	-2.8	1.9				
				Min	Cent	-6.4	1.7				
					62	-4.4	1.4				
					63	-4.4	2.0				
					71	-8.8	2.0				
					70	-8.8	1.4				

ELEM	MAT	SEC	LC		NODE	Fxx	Fyy	Fxy	Fmax	Fmin	ANGLE
64	1	1	SX (RS)		Cent	0.5	0.0	0.3	0.7	-0.1	25.12
					63	0.7	0.2	0.3	0.9	0.1	24.55
					64	0.7	0.3	0.3	0.9	0.2	27.35
					72	1.1	0.3	0.3	1.2	0.2	17.65
					71	1.1	0.2	0.3	1.2	0.1	16.24
					NODE	Mxx	Myy	Mxy	Mmax	Mmin	ANGLE
					Cent	0.8	0.3	0.3	0.9	0.2	22.65
					63	0.3	0.2	0.3	0.5	-0.0	42.22
					64	1.8	1.0	0.1	1.8	0.9	10.01
					72	0.6	0.2	0.2	0.6	0.1	20.21
					71	0.5	0.1	0.3	0.7	-0.1	27.10
					NODE	Vxx	Vyy				
					Cent	1.4	1.0				
					63	2.6	0.3				
					64	2.6	1.6				
					72	0.4	1.6				
					71	0.4	0.3				

LC		NODE	Fxx	Fyy	Fxy	Fmax	Fmin	ANGLE
SY (RS)		Cent	3.4	0.1	1.2	3.8	-0.2	17.92
		63	2.6	0.6	1.2	3.2	0.1	24.91
		64	2.6	0.6	1.2	3.2	0.1	24.67
		72	4.4	0.6	1.2	4.7	0.3	16.09
		71	4.4	0.6	1.2	4.7	0.3	16.21
		NODE	Mxx	Myy	Mxy	Mmax	Mmin	ANGLE
		Cent	2.6	0.7	0.8	2.9	0.4	20.49
		63	1.3	0.3	1.0	2.0	-0.3	32.01
		64	4.6	2.3	0.9	4.9	2.0	19.97
		72	4.6	0.5	0.7	4.7	0.4	9.37
		71	1.1	0.1	0.8	1.5	-0.4	28.08
		NODE	Vxx	Vyy				
		Cent	7.0	1.5				
		63	6.8	0.5				
		64	6.8	3.3				
		72	7.1	3.3				
		71	7.1	0.5				

LC		NODE	Fxx	Fyy	Fxy	Fmax	Fmin	ANGLE
RC ENV~1	Max	Cent	3.5	0.2	1.4	4.0	-0.1	19.74
		63	2.6	0.8	1.4	3.3	0.0	28.62
		64	2.6	0.5	1.4	3.3	-0.1	26.78
		72	4.7	0.5	1.4	5.1	0.1	16.85
		71	4.7	0.8	1.4	5.1	0.3	17.72
	Min	Cent	-3.3	-0.1	-1.0	0.0	-3.5	-78.53
		63	-2.7	-0.5	-1.0	-0.1	-3.1	-69.27
		64	-2.7	-0.7	-1.0	-0.4	-3.1	-78.78
		72	-4.0	-0.7	-1.0	-0.4	-4.3	-74.90
		71	-4.0	-0.5	-1.0	-0.2	-4.3	-75.59
		NODE	Mxx	Myy	Mxy	Mmax	Mmin	ANGLE
	Max	Cent	1.8	1.7	1.6	3.3	0.2	44.16
		63	-1.5	1.9	1.7	2.5	-2.2	66.93
		64	5.4	4.6	1.8	6.9	3.1	38.47
		72	4.7	0.4	1.4	5.1	0.1	17.03
		71	-0.4	0.5	1.3	1.4	-1.3	53.73

Min	Cent	-4.0	0.3	-1.2	0.3	-4.2	-88.49
	63	-7.0	1.2	-1.2	1.2	-7.1	-85.78
	64	-3.7	-0.1	-0.9	-0.1	-3.7	-89.28
	72	-4.5	-0.6	-1.2	-0.6	-4.5	89.37
	71	-8.0	-0.0	-1.5	0.3	-8.3	-83.14

	NODE	Vxx	Vyy
Max	Cent	2.4	4.7
	63	0.6	3.0
	64	0.6	7.2
	72	4.2	7.2
	71	4.2	3.0
Min	Cent	-14.1	1.7
	63	-13.2	1.9
	64	-13.2	0.6
	72	-16.0	0.6
	71	-16.0	1.9

LC		NODE	Fxx	Fyy	Fxy	Fmax	Fmin	ANGLE
RC ENV~2	Max	Cent	0.6	0.1	0.4	0.8	-0.1	29.82
		63	0.1	0.3	0.4	0.6	-0.1	54.09
		64	0.1	-0.0	0.4	0.3	-0.1	37.45
		72	1.1	-0.0	0.4	1.2	-0.1	16.85
		71	1.1	0.3	0.4	1.2	0.1	23.98
	Min	Cent	0.1	0.0	0.2	0.2	-0.2	44.40
		63	-0.1	0.1	0.2	0.2	-0.3	52.29
		64	-0.1	-0.2	0.2	0.1	-0.5	44.83
		72	0.1	-0.2	0.2	0.2	-0.3	36.60
		71	0.1	0.1	0.2	0.3	-0.1	47.54

	NODE	Mxx	Myy	Mxy	Mmax	Mmin	ANGLE
Max	Cent	-0.7	1.1	0.8	1.4	-1.0	68.70
	63	-2.7	1.5	0.7	1.6	-2.8	81.00
	64	1.7	2.7	0.9	2.9	1.5	61.19
	72	1.2	0.2	0.8	1.3	0.1	6.67
	71	-1.4	0.4	0.5	0.6	-1.5	74.66
Min	Cent	-2.7	0.9	-0.6	0.9	-2.8	-87.91
	63	-4.9	1.3	-0.6	1.3	-5.0	-88.60
	64	-0.7	1.9	-0.4	1.9	-0.7	86.94
	72	0.0	-0.1	-0.7	0.2	-0.8	-49.85
	71	-5.3	0.1	-0.9	0.2	-5.5	-81.13

	NODE	Vxx	Vyy
Max	Cent	-4.5	3.6
	63	-6.1	2.4
	64	-6.1	4.8
	72	-2.9	4.8
	71	-2.9	2.4
Min	Cent	-9.8	2.8
	63	-9.6	2.0
	64	-9.6	3.4
	72	-10.6	3.4
	71	-10.6	2.0

ELEM	MAT	SEC	LC		NODE	Fxx	Fyy	Fxy	Fmax	Fmin	ANGLE
65	1	1	SX (RS)		Cent	0.4	0.1	0.2	0.5	0.0	21.96
					64	0.9	0.3	0.2	0.9	0.2	14.40
					65	0.9	0.1	0.2	0.9	0.1	11.36
					26	0.2	0.1	0.2	0.3	-0.0	35.87
					72	0.2	0.3	0.2	0.4	0.1	51.72

	NODE	Mxx	Myy	Mxy	Mmax	Mmin	ANGLE
	Cent	0.1	0.1	0.2	0.3	-0.1	44.04
	64	2.1	1.0	0.4	2.2	0.9	18.28
	65	3.7	0.7	0.4	3.8	0.7	8.08
	26	1.7	0.3	0.4	1.8	0.2	14.33
	72	0.4	0.2	0.4	0.8	-0.1	39.64

	NODE	Vxx	Vyy
	Cent	3.8	0.8

	64	9.7	1.6	
	65	9.7	0.0	
	26	2.1	0.0	
	72	2.1	1.6	

LC		NODE	Fxx	Fyy	Fxy	Fmax	Fmin	ANGLE
SY (RS)		Cent	4.7	0.8	0.8	4.9	0.6	10.67
		64	3.7	0.2	0.8	3.9	0.1	11.89
		65	3.7	1.3	0.8	4.0	1.1	16.30
		26	5.7	1.3	0.8	5.8	1.2	9.70
		72	5.7	0.2	0.8	5.8	0.1	7.87

	NODE	Mxx	Myy	Mxy	Mmax	Mmin	ANGLE
	Cent	5.4	1.4	0.3	5.4	1.3	3.67
	64	2.5	1.9	0.2	2.5	1.8	13.23
	65	8.2	3.4	0.4	8.3	3.3	4.55
	26	6.1	0.4	0.2	6.1	0.4	2.13
	72	5.0	0.6	0.2	5.0	0.6	2.14

	NODE	Vxx	Vyy
	Cent	6.3	4.6
	64	10.2	3.3
	65	10.2	6.0
	26	2.4	6.0
	72	2.4	3.3

LC		NODE	Fxx	Fyy	Fxy	Fmax	Fmin	ANGLE
RC ENV~1	Max	Cent	5.2	0.7	0.9	5.4	0.5	10.89
		64	4.1	0.3	0.9	4.3	0.2	12.65
		65	4.1	1.1	0.9	4.3	0.8	15.72
		26	6.4	1.1	0.9	6.5	1.0	9.56
		72	6.4	0.3	0.9	6.5	0.1	8.28
	Min	Cent	-4.2	-0.9	-0.6	-0.8	-4.3	-79.63
		64	-3.4	-0.3	-0.6	-0.3	-3.5	-83.76
		65	-3.4	-1.5	-0.6	-1.3	-3.6	-72.80
		26	-5.0	-1.5	-0.6	-1.4	-5.2	-80.10
		72	-5.0	-0.3	-0.6	-0.2	-5.1	-82.65

	NODE	Mxx	Myy	Mxy	Mmax	Mmin	ANGLE
Max	Cent	7.3	2.3	1.1	7.6	2.1	11.93
	64	3.8	4.2	1.5	5.3	3.2	49.87
	65	11.7	5.1	1.3	12.0	4.9	10.47
	26	7.9	-0.0	0.9	8.2	-0.2	-9.83
	72	6.4	0.8	1.2	6.5	0.6	9.04
Min	Cent	-3.5	-0.4	-1.2	-0.3	-3.6	79.57
	64	-1.2	0.5	-0.8	0.9	-1.6	65.29
	65	-4.7	-1.6	-1.1	-1.6	-4.8	81.20
	26	-4.7	-0.9	-1.7	-0.8	-4.7	85.39
	72	-3.5	-0.4	-1.5	-0.3	-3.6	79.76

	NODE	Vxx	Vyy
Max	Cent	4.1	8.2
	64	6.1	7.2
	65	6.1	9.2
	26	2.2	9.2
	72	2.2	7.2
Min	Cent	-14.0	-1.0
	64	-14.4	0.6
	65	-14.4	-2.7
	26	-15.9	-2.7
	72	-15.9	0.6

LC		NODE	Fxx	Fyy	Fxy	Fmax	Fmin	ANGLE
RC ENV~2	Max	Cent	1.2	-0.1	0.3	1.2	-0.1	9.45
		64	1.0	0.1	0.3	1.0	-0.0	12.12
		65	1.0	-0.2	0.3	1.0	-0.2	9.74
		26	1.4	-0.2	0.3	1.4	-0.2	7.72
		72	1.4	0.1	0.3	1.4	0.0	9.18
	Min	Cent	0.5	-0.2	0.1	0.5	-0.2	13.30

64	0.2	-0.1	0.1	0.3	-0.1	36.18
65	0.2	-0.4	0.1	0.2	-0.5	18.09
26	0.6	-0.4	0.1	0.7	-0.4	9.08
72	0.6	-0.1	0.1	0.7	-0.1	12.12

	NODE	Mxx	Myy	Mxy	Mmax	Mmin	ANGLE
Max	Cent	3.5	1.1	0.9	3.5	1.1	4.24
	64	2.5	2.9	1.2	3.3	2.2	54.97
	65	6.7	2.2	0.9	6.7	2.2	2.70
	26	5.3	-0.1	0.6	5.4	-0.2	-8.21
	72	1.7	0.2	0.8	2.0	0.1	22.54
Min	Cent	1.9	0.9	-0.6	2.0	0.4	-0.68
	64	0.4	2.1	-0.3	2.2	0.3	76.19
	65	2.7	1.5	-0.5	2.8	1.3	11.96
	26	1.3	-0.5	-1.0	1.5	-0.6	14.26
	72	-1.1	-0.2	-0.8	0.1	-1.5	89.97

	NODE	Vxx	Vyy
Max	Cent	-1.9	4.4
	64	-2.3	4.8
	65	-2.3	4.1
	26	-0.2	4.1
	72	-0.2	4.8
Min	Cent	-9.3	3.4
	64	-9.2	3.4
	65	-9.2	3.2
	26	-10.1	3.2
	72	-10.1	3.4

ELEM	MAT	SEC	LC	NODE	Fxx	Fyy	Fxy	Fmax	Fmin	ANGLE
66	1	1	SX (RS)	Cent	1.0	0.4	0.4	1.2	0.2	28.57
				73	1.3	0.7	0.4	1.5	0.5	26.98
				74	1.3	0.2	0.4	1.4	0.1	18.31
				81	0.7	0.2	0.4	0.9	-0.0	29.41
				80	0.7	0.7	0.4	1.1	0.3	45.36

NODE	Mxx	Myy	Mxy	Mmax	Mmin	ANGLE
Cent	0.9	0.7	0.4	1.3	0.4	37.83
73	2.2	2.0	0.5	2.5	1.6	38.79
74	0.4	0.5	0.4	0.8	0.1	46.91
81	0.3	0.6	0.3	0.8	0.1	55.90
80	1.5	0.3	0.4	1.7	0.1	17.08

NODE	Vxx	Vyy
Cent	3.3	1.9
73	4.0	3.8
74	4.0	0.1
81	2.6	0.1
80	2.6	3.8

LC	NODE	Fxx	Fyy	Fxy	Fmax	Fmin	ANGLE
SY (RS)	Cent	2.4	1.3	1.3	3.2	0.5	33.55
	73	2.1	2.5	1.3	3.6	1.0	49.75
	74	2.1	0.4	1.3	2.7	-0.3	28.15
	81	2.7	0.4	1.3	3.3	-0.2	23.43
	80	2.7	2.5	1.3	3.9	1.3	42.07

NODE	Mxx	Myy	Mxy	Mmax	Mmin	ANGLE
Cent	1.8	1.3	1.6	3.2	-0.1	40.03
73	1.1	8.4	0.6	8.4	1.0	85.01
74	1.3	0.6	1.0	2.0	-0.1	34.04
81	1.3	0.5	2.1	3.1	-1.3	39.12
80	4.8	3.5	1.8	6.1	2.2	35.07

NODE	Vxx	Vyy
Cent	4.5	9.6
73	2.1	19.9
74	2.1	0.7
81	6.8	0.7

		80	6.8	19.9			

LC		NODE	Fxx	Fyy	Fxy	Fmax	Fmin	ANGLE
RC ENV~1	Max	Cent	2.4	1.7	1.1	3.2	0.9	35.47
		73	2.1	3.1	1.1	3.8	1.4	57.09
		74	2.1	0.5	1.1	2.7	0.3	26.57
		81	2.8	0.5	1.1	3.2	0.2	21.78
		80	2.8	3.1	1.1	4.0	1.8	49.20
	Min	Cent	-2.4	-1.0	-1.5	-0.0	-3.3	-57.81
		73	-2.0	-1.9	-1.5	-0.5	-3.4	-46.18
		74	-2.0	-0.2	-1.5	0.2	-2.8	-67.16
		81	-2.7	-0.2	-1.5	0.3	-3.4	-58.34
		80	-2.7	-1.9	-1.5	-0.8	-3.8	-53.04

		NODE	Mxx	Myy	Mxy	Mmax	Mmin	ANGLE
	Max	Cent	4.9	3.5	2.4	5.5	2.9	-29.22
		73	5.3	10.8	1.5	11.0	3.6	82.45
		74	2.8	2.7	2.2	3.2	2.4	-42.94
		81	3.4	1.9	2.9	4.0	1.3	-28.27
		80	8.2	6.5	2.1	9.1	4.7	-24.99
	Min	Cent	-4.2	0.5	-1.1	0.6	-4.3	-80.58
		73	-3.4	-6.0	-1.2	-2.3	-6.0	2.90
		74	-5.8	0.2	-0.4	0.2	-5.9	87.08
		81	-5.1	0.2	-1.3	0.2	-5.4	84.28
		80	-4.5	-0.5	-1.9	0.0	-5.0	-72.07

		NODE	Vxx	Vyy
	Max	Cent	10.3	9.4
		73	9.2	19.3
		74	9.2	1.7
		81	13.3	1.7
		80	13.3	19.3
	Min	Cent	1.4	-9.8
		73	0.9	-20.5
		74	0.9	-0.5
		81	-0.3	-0.5
		80	-0.3	-20.5

LC		NODE	Fxx	Fyy	Fxy	Fmax	Fmin	ANGLE
RC ENV~2	Max	Cent	0.6	0.7	-0.2	0.8	0.2	-66.84
		73	0.6	1.2	-0.2	1.2	0.4	-75.16
		74	0.6	0.2	-0.2	0.7	0.0	-20.78
		81	0.5	0.2	-0.2	0.6	0.0	-25.88
		80	0.5	1.2	-0.2	1.3	0.3	-73.80
	Min	Cent	-0.0	0.2	-0.3	0.4	-0.1	-61.49
		73	-0.1	0.3	-0.3	0.6	-0.2	-69.20
		74	-0.1	0.1	-0.3	0.3	-0.3	-64.76
		81	-0.0	0.1	-0.3	0.3	-0.2	-55.75
		80	-0.0	0.3	-0.3	0.5	-0.1	-40.34

		NODE	Mxx	Myy	Mxy	Mmax	Mmin	ANGLE
	Max	Cent	2.7	2.6	0.9	3.2	2.1	-41.51
		73	3.2	3.3	0.9	3.8	2.6	-45.60
		74	1.0	1.9	1.3	1.9	1.0	-87.56
		81	1.5	1.4	0.8	2.0	0.8	-42.66
		80	5.3	4.0	0.4	5.9	3.4	-28.02
	Min	Cent	-2.4	1.7	-0.6	1.9	-2.6	78.64
		73	-1.4	2.1	-0.6	2.1	-1.6	82.31
		74	-4.5	0.7	-0.1	1.0	-4.8	76.94
		81	-3.9	0.8	-0.6	0.9	-4.0	80.37
		80	0.2	3.0	-1.1	3.0	0.1	83.45

		NODE	Vxx	Vyy
	Max	Cent	6.9	0.8
		73	5.8	0.7
		74	5.8	1.1
		81	8.0	1.1
		80	8.0	0.7
	Min	Cent	2.8	-0.9
		73	1.5	-2.4
		74	1.5	0.2

				81	4.0	0.2			
				80	4.0	-2.4			

ELEM	MAT	SEC	LC	NODE	Fxx	Fyy	Fxy	Fmax	Fmin	ANGLE
67	1	1	SX (RS)	Cent	0.6	0.2	0.4	0.9	-0.1	34.11
				74	0.5	0.4	0.4	0.9	-0.0	41.81
				75	0.5	0.1	0.4	0.8	-0.2	33.11
				82	0.7	0.1	0.4	0.9	-0.1	27.48
				81	0.7	0.4	0.4	1.0	0.1	34.79

	NODE	Mxx	Myy	Mxy	Mmax	Mmin	ANGLE
	Cent	0.6	0.4	0.2	0.8	0.2	29.44
	74	0.3	0.6	0.2	0.7	0.2	58.52
	75	1.3	0.2	0.2	1.3	0.2	7.91
	82	1.2	0.2	0.2	1.3	0.1	12.64
	81	0.3	0.6	0.3	0.8	0.1	57.22

	NODE	Vxx	Vyy
	Cent	2.2	0.1
	74	2.1	0.1
	75	2.1	0.1
	82	2.3	0.1
	81	2.3	0.1

LC	NODE	Fxx	Fyy	Fxy	Fmax	Fmin	ANGLE
SY (RS)	Cent	2.2	0.3	0.9	2.6	-0.0	22.13
	74	1.9	0.3	0.9	2.3	-0.1	25.31
	75	1.9	0.3	0.9	2.3	-0.1	25.39
	82	2.6	0.3	0.9	3.0	0.0	19.54
	81	2.6	0.3	0.9	3.0	0.0	19.49

	NODE	Mxx	Myy	Mxy	Mmax	Mmin	ANGLE
	Cent	1.1	0.7	1.7	2.7	-0.9	41.12
	74	1.4	0.6	2.0	3.1	-1.1	39.36
	75	1.0	1.6	1.9	3.2	-0.6	49.04
	82	1.4	0.7	1.5	2.6	-0.5	38.69
	81	1.2	0.4	1.7	2.5	-0.9	38.72

	NODE	Vxx	Vyy
	Cent	1.1	0.6
	74	1.5	0.7
	75	1.5	1.7
	82	0.8	1.7
	81	0.8	0.7

LC		NODE	Fxx	Fyy	Fxy	Fmax	Fmin	ANGLE
RC ENV~1	Max	Cent	2.3	0.5	0.8	2.6	0.3	21.02
		74	1.9	0.5	0.8	2.3	0.3	24.49
		75	1.9	0.4	0.8	2.3	0.2	24.25
		82	2.7	0.4	0.8	3.0	0.2	18.28
		81	2.7	0.5	0.8	3.0	0.4	18.44
	Min	Cent	-2.2	-0.2	-1.0	0.2	-2.6	-66.88
		74	-1.8	-0.2	-1.0	0.2	-2.3	-49.30
		75	-1.8	-0.2	-1.0	0.3	-2.3	-63.61
		82	-2.5	-0.2	-1.0	0.1	-2.9	-69.31
		81	-2.5	-0.2	-1.0	0.1	-2.9	-54.90

		NODE	Mxx	Myy	Mxy	Mmax	Mmin	ANGLE
	Max	Cent	3.8	2.0	2.9	3.8	1.9	-4.08
		74	3.9	2.9	3.4	3.9	2.9	-11.87
		75	3.6	1.7	3.2	3.6	1.7	2.93
		82	3.5	1.0	2.6	3.5	1.0	-5.60
		81	4.5	2.2	2.7	4.6	2.0	-14.04
	Min	Cent	-5.5	-0.3	-0.6	-0.2	-5.5	-83.78
		74	-4.9	0.4	-0.7	0.5	-5.0	-82.48
		75	-6.4	-1.8	-0.5	-1.7	-6.6	-83.02
		82	-6.4	-0.7	-0.5	-0.7	-6.4	-85.14
		81	-4.8	0.2	-0.6	0.4	-4.9	80.28

	NODE	Vxx	Vyy
Max	Cent	4.4	1.4
	74	4.4	1.7
	75	4.4	1.4
	82	4.5	1.4
	81	4.5	1.7
Min	Cent	0.0	-0.6
	74	-0.0	-0.5
	75	-0.0	-2.0
	82	-0.2	-2.0
	81	-0.2	-0.5

LC		NODE	Fxx	Fyy	Fxy	Fmax	Fmin	ANGLE
RC ENV~2	Max	Cent	0.5	0.2	-0.0	0.5	0.2	-15.52
		74	0.4	0.3	-0.0	0.4	0.2	-20.44
		75	0.4	0.2	-0.0	0.4	0.1	-21.71
		82	0.5	0.2	-0.0	0.5	0.1	-11.25
		81	0.5	0.3	-0.0	0.5	0.3	-14.60
	Min	Cent	0.1	0.0	-0.2	0.2	-0.0	-50.42
		74	0.1	-0.0	-0.2	0.2	-0.0	-50.12
		75	0.1	0.1	-0.2	0.2	-0.0	-50.80
		82	0.1	0.1	-0.2	0.2	-0.0	-50.72
		81	0.1	-0.0	-0.2	0.2	-0.1	-52.47

	NODE	Mxx	Myy	Mxy	Mmax	Mmin	ANGLE
Max	Cent	1.6	1.3	1.2	1.6	1.3	15.89
	74	1.8	2.0	1.3	2.1	1.8	68.36
	75	1.3	1.0	1.3	1.5	0.8	30.26
	82	1.3	0.6	1.1	1.3	0.6	2.72
	81	2.2	1.5	1.1	2.2	1.4	-16.09
Min	Cent	-4.4	0.4	-0.0	0.6	-4.7	76.62
	74	-3.6	0.9	0.1	1.3	-3.9	74.58
	75	-5.3	-0.3	0.2	0.1	-5.6	76.25
	82	-5.2	-0.0	-0.1	0.2	-5.4	79.36
	81	-3.7	0.8	-0.2	1.0	-3.9	77.24

	NODE	Vxx	Vyy
Max	Cent	2.9	0.9
	74	2.7	1.1
	75	2.7	0.7
	82	3.2	0.7
	81	3.2	1.1
Min	Cent	0.7	-0.1
	74	0.4	0.2
	75	0.4	-0.4
	82	1.0	-0.4
	81	1.0	0.2

ELEM	MAT	SEC	LC		NODE	Fxx	Fyy	Fxy	Fmax	Fmin	ANGLE
68	1	1	SX (RS)		Cent	1.1	0.1	0.4	1.2	-0.1	20.02
					75	0.9	0.2	0.4	1.1	-0.0	24.75
					76	0.9	0.1	0.4	1.1	-0.0	23.93
					83	1.2	0.1	0.4	1.4	0.0	18.57
					82	1.2	0.2	0.4	1.4	0.0	19.11

	NODE	Mxx	Myy	Mxy	Mmax	Mmin	ANGLE
	Cent	1.8	0.2	0.2	1.8	0.2	7.60
	75	1.2	0.2	0.2	1.3	0.2	10.10
	76	2.3	0.3	0.2	2.4	0.2	6.37
	83	2.4	0.2	0.2	2.4	0.2	6.59
	82	1.2	0.2	0.2	1.2	0.2	11.13

	NODE	Vxx	Vyy
	Cent	2.0	0.1
	75	1.9	0.1
	76	1.9	0.1
	83	2.1	0.1
	82	2.1	0.1

LC		NODE	Fxx	Fyy	Fxy	Fmax	Fmin	ANGLE
SY (RS)		Cent	1.9	0.4	0.6	2.1	0.1	18.60
		75	1.6	0.3	0.6	1.9	0.1	21.29
		76	1.6	0.4	0.6	1.9	0.2	22.69
		83	2.3	0.4	0.6	2.5	0.2	16.41
		82	2.3	0.3	0.6	2.5	0.1	15.60

	NODE	Mxx	Myy	Mxy	Mmax	Mmin	ANGLE
	Cent	1.2	1.1	1.4	2.6	-0.2	43.56
	75	1.0	1.6	1.4	2.7	-0.1	50.40
	76	1.1	1.2	1.3	2.5	-0.1	46.26
	83	1.6	0.9	1.4	2.7	-0.2	38.08
	82	1.3	0.7	1.5	2.6	-0.5	39.62

	NODE	Vxx	Vyy
	Cent	0.6	1.2
	75	0.9	1.7
	76	0.9	0.8
	83	0.4	0.8
	82	0.4	1.7

LC		NODE	Fxx	Fyy	Fxy	Fmax	Fmin	ANGLE
RC ENV~1	Max	Cent	2.0	0.4	0.6	2.3	0.2	18.87
		75	1.8	0.4	0.6	2.0	0.3	21.49
		76	1.8	0.5	0.6	2.0	0.2	22.10
		83	2.4	0.5	0.6	2.6	0.3	16.72
		82	2.4	0.4	0.6	2.5	0.3	16.34
	Min	Cent	-1.8	-0.3	-0.6	-0.1	-2.0	-71.69
		75	-1.5	-0.2	-0.6	0.0	-1.7	-68.91
		76	-1.5	-0.4	-0.6	-0.1	-1.7	-66.65
		83	-2.2	-0.4	-0.6	-0.2	-2.4	-73.91
		82	-2.2	-0.2	-0.6	-0.0	-2.4	-75.14

		NODE	Mxx	Myy	Mxy	Mmax	Mmin	ANGLE
	Max	Cent	4.3	1.4	2.4	4.3	1.4	0.16
		75	3.8	1.7	2.5	3.8	1.7	-0.56
		76	4.7	1.9	2.3	4.7	1.9	1.09
		83	4.6	1.0	2.4	4.6	1.0	0.33
		82	3.9	1.1	2.6	3.9	1.1	-1.06
	Min	Cent	-6.6	-1.2	-0.4	-1.2	-6.7	-85.73
		75	-6.0	-1.7	-0.3	-1.7	-6.1	-85.70
		76	-7.0	-1.3	-0.3	-1.3	-7.1	-86.18
		83	-7.1	-1.0	-0.4	-1.0	-7.2	-85.51
		82	-6.4	-0.8	-0.4	-0.7	-6.5	-85.63

		NODE	Vxx	Vyy
	Max	Cent	1.5	1.4
		75	1.7	1.4
		76	1.7	1.6
		83	1.3	1.6
		82	1.3	1.4
	Min	Cent	-2.5	-1.4
		75	-2.2	-2.0
		76	-2.2	-0.8
		83	-2.8	-0.8
		82	-2.8	-2.0

LC		NODE	Fxx	Fyy	Fxy	Fmax	Fmin	ANGLE
RC ENV~2	Max	Cent	0.6	0.1	0.1	0.6	0.1	6.98
		75	0.6	0.2	0.1	0.6	0.2	8.28
		76	0.6	0.1	0.1	0.6	0.1	6.28
		83	0.6	0.1	0.1	0.6	0.1	7.95
		82	0.6	0.2	0.1	0.7	0.2	11.15
	Min	Cent	-0.0	0.1	-0.0	0.1	-0.0	-68.11
		75	0.0	0.0	-0.0	0.1	0.0	-39.49
		76	0.0	-0.0	-0.0	0.1	-0.0	14.52
		83	-0.1	-0.0	-0.0	0.0	-0.1	78.95
		82	-0.1	0.0	-0.0	0.0	-0.1	-75.20

	NODE	Mxx	Myy	Mxy	Mmax	Mmin	ANGLE
Max	Cent	1.8	0.9	1.1	1.9	0.9	10.99
	75	1.5	1.1	1.1	1.6	1.0	18.64
	76	2.2	1.2	1.0	2.2	1.1	11.97
	83	2.1	0.6	1.0	2.1	0.6	7.24
	82	1.6	0.7	1.1	1.6	0.7	9.95
Min	Cent	-5.0	-0.1	0.0	0.0	-5.2	78.91
	75	-4.9	-0.2	0.0	0.0	-5.2	77.85
	76	-4.9	-0.2	0.0	0.0	-5.1	78.88
	83	-5.0	-0.2	0.0	0.0	-5.2	79.58
	82	-5.3	-0.1	0.0	0.1	-5.5	79.22

	NODE	Vxx	Vyy
Max	Cent	0.3	0.9
	75	0.3	0.7
	76	0.3	1.0
	83	0.3	1.0
	82	0.3	0.7
Min	Cent	-1.2	-0.2
	75	-1.1	-0.4
	76	-1.1	-0.1
	83	-1.3	-0.1
	82	-1.3	-0.4

ELEM	MAT	SEC	LC	NODE	Fxx	Fyy	Fxy	Fmax	Fmin	ANGLE
69	1	1	SX (RS)	Cent	1.7	0.2	0.3	1.7	0.1	11.76
				76	1.6	0.1	0.3	1.7	0.0	11.34
				77	1.6	0.4	0.3	1.7	0.3	13.96
				84	1.8	0.4	0.3	1.8	0.3	12.61
				83	1.8	0.1	0.3	1.8	0.0	10.41

	NODE	Mxx	Myy	Mxy	Mmax	Mmin	ANGLE
	Cent	2.9	0.3	0.4	2.9	0.3	7.81
	76	2.3	0.3	0.3	2.3	0.2	8.51
	77	3.4	0.5	0.4	3.4	0.4	7.85
	84	3.5	0.4	0.4	3.6	0.4	7.25
	83	2.4	0.2	0.3	2.4	0.2	8.14

	NODE	Vxx	Vyy
	Cent	1.9	0.2
	76	1.8	0.1
	77	1.8	0.3
	84	2.0	0.3
	83	2.0	0.1

LC	NODE	Fxx	Fyy	Fxy	Fmax	Fmin	ANGLE
SY (RS)	Cent	1.6	0.3	0.6	1.8	0.1	22.58
	76	1.3	0.4	0.6	1.6	0.1	27.25
	77	1.3	0.3	0.6	1.6	-0.0	25.39
	84	1.9	0.3	0.6	2.1	0.1	18.82
	83	1.9	0.4	0.6	2.1	0.2	19.98

	NODE	Mxx	Myy	Mxy	Mmax	Mmin	ANGLE
	Cent	1.3	1.1	1.2	2.4	-0.0	42.30
	76	1.1	1.2	1.2	2.4	-0.1	46.43
	77	1.1	1.4	1.2	2.5	0.1	48.67
	84	1.5	0.8	1.2	2.5	-0.1	37.25
	83	1.6	0.9	1.3	2.6	-0.1	37.50

	NODE	Vxx	Vyy
	Cent	0.1	1.0
	76	0.5	0.8
	77	0.5	1.2
	84	0.4	1.2
	83	0.4	0.8

LC	NODE	Fxx	Fyy	Fxy	Fmax	Fmin	ANGLE

```
RC ENV~1  Max   Cent        1.8        0.4        0.7        2.1        0.2      23.86
                  76        1.8        0.5        0.7        1.9        0.1      13.50
                  77        1.8        0.5        0.7        1.9        0.4      16.40
                  84        2.0        0.5        0.7        2.3        0.4      20.83
                  83        2.0        0.5        0.7        2.3        0.2      21.71
          Min   Cent       -1.5       -0.3       -0.5       -0.1       -1.6     -81.52
                  76       -1.4       -0.4       -0.5       -0.1       -1.4     -62.74
                  77       -1.4       -0.3       -0.5       -0.3       -1.4     -79.39
                  84       -1.8       -0.3       -0.5       -0.3       -1.9     -81.23
                  83       -1.8       -0.4       -0.5       -0.2       -1.9     -72.14

                NODE        Mxx        Myy        Mxy       Mmax       Mmin      ANGLE
          ---- ------ ---------- ---------- ---------- ---------- ---------- ----------
          Max   Cent        5.7        1.9        2.1        5.7        1.9       3.11
                  76        4.5        1.9        2.1        4.5        1.9      -0.01
                  77        6.7        3.0        2.0        6.7        3.0       2.83
                  84        7.0        1.9        2.2        7.0        1.8       4.49
                  83        4.6        1.0        2.3        4.6        1.0       3.53
          Min   Cent       -6.8       -0.9       -0.3       -0.9       -6.8     -85.41
                  76       -7.0       -1.3       -0.4       -1.3       -7.0     -84.78
                  77       -6.3       -0.8       -0.4       -0.7       -6.3     -83.46
                  84       -6.4       -0.4       -0.3       -0.4       -6.4     -85.64
                  83       -7.4       -1.1       -0.3       -1.1       -7.4     -86.63

                NODE        Vxx        Vyy
          ---- ------ ---------- ----------
          Max   Cent       -1.3        1.9
                  76       -1.0        1.6
                  77       -1.0        2.2
                  84       -1.6        2.2
                  83       -1.6        1.6
          Min   Cent       -5.1       -0.8
                  76       -4.7       -0.8
                  77       -4.7       -0.8
                  84       -5.6       -0.8
                  83       -5.6       -0.8

      LC        NODE        Fxx        Fyy        Fxy       Fmax       Fmin      ANGLE
-------- ---- ------ ---------- ---------- ---------- ---------- ---------- ----------
RC ENV~2  Max   Cent        0.9        0.1        0.2        1.0        0.0      10.52
                  76        1.0        0.1        0.2        1.0        0.0      10.81
                  77        1.0        0.2        0.2        1.0        0.1       9.56
                  84        0.9        0.2        0.2        0.9        0.1      10.24
                  83        0.9        0.1        0.2        0.9        0.0      11.68
          Min   Cent       -0.2       -0.0        0.1        0.1       -0.2      79.73
                  76       -0.2        0.0        0.1        0.1       -0.2      73.93
                  77       -0.2       -0.1        0.1        0.2       -0.2      45.84
                  84       -0.2       -0.1        0.1        0.2       -0.3      58.62
                  83       -0.2        0.0        0.1        0.0       -0.3      78.41

                NODE        Mxx        Myy        Mxy       Mmax       Mmin      ANGLE
          ---- ------ ---------- ---------- ---------- ---------- ---------- ----------
          Max   Cent        2.9        1.3        0.9        3.0        1.2       9.67
                  76        2.0        1.2        0.9        2.0        1.1      10.06
                  77        3.7        2.0        0.8        3.8        2.0       8.65
                  84        3.9        1.3        1.0        4.0        1.2       8.87
                  83        2.0        0.6        1.0        2.1        0.5      12.00
          Min   Cent       -4.2        0.1        0.1        0.3       -4.4      79.72
                  76       -5.0       -0.2       -0.1       -0.1       -5.1      81.00
                  77       -3.3        0.6       -0.0        0.7       -3.4      79.72
                  84       -3.3        0.4        0.2        0.6       -3.5      77.41
                  83       -5.3       -0.2        0.1       -0.1       -5.5      80.15

                NODE        Vxx        Vyy
          ---- ------ ---------- ----------
          Max   Cent       -2.2        1.3
                  76       -2.0        1.0
                  77       -2.0        1.5
                  84       -2.3        1.5
                  83       -2.3        1.0
          Min   Cent       -3.5        0.1
                  76       -3.2       -0.1
                  77       -3.2        0.3
                  84       -3.8        0.3
                  83       -3.8       -0.1

  ELEM   MAT    SEC        LC        NODE        Fxx        Fyy        Fxy       Fmax       Fmin      ANGLE
```

```
------ ------ ------ -------- ---- ------ ---------- ---------- ---------- ---------- ---------- ----------
    70      1      1       SX (RS)   Cent        2.5        0.5        0.1        2.5        0.5       4.36
                                       77        2.5        0.2        0.1        2.5        0.2       3.73
                                       78        2.5        0.8        0.1        2.5        0.8       4.82
                                       85        2.4        0.8        0.1        2.4        0.8       5.24
                                       84        2.4        0.2        0.1        2.4        0.2       3.97

                                     NODE        Mxx        Myy        Mxy       Mmax       Mmin      ANGLE
                                 ---- ------ ---------- ---------- ---------- ---------- ---------- ----------
                                     Cent        3.9        0.7        0.6        4.0        0.6       9.76
                                       77        3.2        0.5        0.5        3.3        0.4       9.48
                                       78        4.3        0.9        0.6        4.4        0.8      10.13
                                       85        4.7        0.9        0.7        4.8        0.8       9.99
                                       84        3.4        0.4        0.5        3.5        0.3       9.83

                                     NODE        Vxx        Vyy
                                 ---- ------ ---------- ----------
                                     Cent        1.9        0.2
                                       77        1.7        0.3
                                       78        1.7        0.2
                                       85        2.1        0.2
                                       84        2.1        0.3


                           LC        NODE        Fxx        Fyy        Fxy       Fmax       Fmin      ANGLE
                       -------- ---- ------ ---------- ---------- ---------- ---------- ---------- ----------
                           SY (RS)   Cent        1.2        0.3        1.0        1.8       -0.3      32.08
                                       77        1.1        0.3        1.0        1.7       -0.4      33.82
                                       78        1.1        0.3        1.0        1.7       -0.3      34.10
                                       85        1.4        0.3        1.0        1.9       -0.3      30.15
                                       84        1.4        0.3        1.0        1.9       -0.3      29.90

                                     NODE        Mxx        Myy        Mxy       Mmax       Mmin      ANGLE
                                 ---- ------ ---------- ---------- ---------- ---------- ---------- ----------
                                     Cent        1.2        0.9        1.2        2.3       -0.2      41.88
                                       77        1.1        1.4        1.3        2.6       -0.0      48.43
                                       78        0.7        0.7        1.4        2.1       -0.6      44.51
                                       85        1.3        0.7        1.2        2.3       -0.3      38.08
                                       84        1.6        0.8        1.2        2.5       -0.0      36.59

                                     NODE        Vxx        Vyy
                                 ---- ------ ---------- ----------
                                     Cent        0.4        0.7
                                       77        0.6        1.2
                                       78        0.6        0.3
                                       85        0.5        0.3
                                       84        0.5        1.2


                           LC        NODE        Fxx        Fyy        Fxy       Fmax       Fmin      ANGLE
                       -------- ---- ------ ---------- ---------- ---------- ---------- ---------- ----------
                       RC ENV~1  Max   Cent        2.7        0.6        1.2        2.8        0.5       9.54
                                       77        2.8        0.4        1.2        2.9        0.3       8.27
                                       78        2.8        0.9        1.2        2.9        0.8      10.24
                                       85        2.6        0.9        1.2        2.7        0.8      11.24
                                       84        2.6        0.4        1.2        2.7        0.3       8.92
                                  Min   Cent       -2.2       -0.4       -0.7       -0.4       -2.2      87.79
                                       77       -2.2       -0.2       -0.7       -0.1       -2.2      88.13
                                       78       -2.2       -0.7       -0.7       -0.7       -2.2      87.48
                                       85       -2.1       -0.7       -0.7       -0.7       -2.1      87.31
                                       84       -2.1       -0.2       -0.7       -0.1       -2.1      88.04

                                     NODE        Mxx        Myy        Mxy       Mmax       Mmin      ANGLE
                                 ---- ------ ---------- ---------- ---------- ---------- ---------- ----------
                                  Max   Cent        8.6        3.5        2.2        8.7        3.4       8.64
                                       77        5.5        2.8        2.1        5.6        2.8       6.72
                                       78       11.8        7.1        2.1       11.9        7.1       6.09
                                       85       10.2        2.2        2.3       10.3        2.0       7.49
                                       84        6.8        1.8        2.3        7.0        1.7       9.80
                                  Min   Cent       -5.2        0.4       -0.3        0.4       -5.2     -84.89
                                       77       -7.0       -0.9       -0.5       -0.8       -7.0     -82.64
                                       78       -2.6        2.9       -0.6        2.9       -2.6      88.95
                                       85       -4.6       -0.3       -0.2       -0.3       -4.6      84.99
                                       84       -6.5       -0.4       -0.1       -0.4       -6.5     -88.93

                                     NODE        Vxx        Vyy
                                 ---- ------ ---------- ----------
                                  Max   Cent       -5.2        5.3
                                       77       -6.9        2.2
```

		78	-6.9	8.4			
		85	-3.5	8.4			
		84	-3.5	2.2			
	Min	Cent	-9.4	2.2			
		77	-11.3	-0.8			
		78	-11.3	4.9			
		85	-7.8	4.9			
		84	-7.8	-0.8			

LC		NODE	Fxx	Fyy	Fxy	Fmax	Fmin	ANGLE
RC ENV~2	Max	Cent	1.4	0.3	0.3	1.4	-0.0	9.22
		77	1.4	0.2	0.3	1.5	0.0	9.58
		78	1.4	0.4	0.3	1.5	-0.0	8.21
		85	1.3	0.4	0.3	1.3	-0.0	8.88
		84	1.3	0.2	0.3	1.4	0.0	10.50
	Min	Cent	-0.4	-0.1	0.2	0.3	-0.5	51.07
		77	-0.4	0.0	0.2	0.2	-0.5	72.25
		78	-0.4	-0.2	0.2	0.3	-0.5	54.62
		85	-0.4	-0.2	0.2	0.3	-0.4	48.81
		84	-0.4	0.0	0.2	0.2	-0.4	71.06

		NODE	Mxx	Myy	Mxy	Mmax	Mmin	ANGLE
	Max	Cent	5.2	2.4	1.0	5.4	2.3	13.06
		77	2.8	1.9	0.8	3.0	1.7	17.62
		78	7.8	5.2	0.8	7.9	5.1	9.55
		85	6.5	1.5	1.1	6.7	1.3	9.63
		84	3.8	1.2	1.2	4.0	1.0	15.49
	Min	Cent	-1.6	1.2	0.3	1.5	-1.9	73.95
		77	-4.1	0.4	0.0	0.5	-4.2	81.56
		78	1.3	3.7	0.1	3.8	1.2	76.32
		85	-0.3	0.5	0.5	1.1	-1.0	56.32
		84	-3.4	0.4	0.4	0.6	-3.7	75.68

		NODE	Vxx	Vyy
	Max	Cent	-5.4	3.9
		77	-7.0	1.5
		78	-7.0	6.2
		85	-3.8	6.2
		84	-3.8	1.5
	Min	Cent	-7.3	2.8
		77	-8.8	0.3
		78	-8.8	5.2
		85	-5.9	5.2
		84	-5.9	0.3

ELEM	MAT	SEC	LC		NODE	Fxx	Fyy	Fxy	Fmax	Fmin	ANGLE
71	1	1	SX (RS)		Cent	3.7	1.0	0.3	3.7	1.0	6.86
					78	4.2	0.5	0.3	4.2	0.5	5.05
					79	4.2	1.6	0.3	4.2	1.5	7.00
					86	3.2	1.6	0.3	3.3	1.5	10.57
					85	3.2	0.5	0.3	3.3	0.5	6.72

		NODE	Mxx	Myy	Mxy	Mmax	Mmin	ANGLE
		Cent	5.1	0.9	0.9	5.3	0.7	11.67
		78	3.9	0.8	0.9	4.1	0.6	15.01
		79	6.4	2.3	1.0	6.6	2.1	13.14
		86	5.5	0.6	0.8	5.7	0.5	9.41
		85	4.7	0.9	0.7	4.8	0.8	10.48

		NODE	Vxx	Vyy
		Cent	3.0	2.6
		78	4.0	0.2
		79	4.0	5.0
		86	2.1	5.0
		85	2.1	0.2

LC		NODE	Fxx	Fyy	Fxy	Fmax	Fmin	ANGLE
SY (RS)		Cent	1.0	0.9	1.3	2.2	-0.3	43.33
		78	0.8	0.3	1.3	1.9	-0.7	38.98

		79	0.8	1.8	1.3	2.6	-0.0	55.02
		86	1.3	1.8	1.3	2.8	0.2	50.65
		85	1.3	0.3	1.3	2.1	-0.6	34.64

	NODE	Mxx	Myy	Mxy	Mmax	Mmin	ANGLE
	Cent	0.8	1.2	1.2	2.2	-0.3	50.49
	78	0.8	0.7	0.9	1.6	-0.2	44.08
	79	1.0	5.0	0.8	5.1	0.9	78.77
	86	1.2	1.3	1.4	2.7	-0.1	45.70
	85	1.4	0.7	1.5	2.6	-0.4	38.05

	NODE	Vxx	Vyy
	Cent	2.1	5.3
	78	1.0	0.3
	79	1.0	10.6
	86	3.3	10.6
	85	3.3	0.3

LC		NODE	Fxx	Fyy	Fxy	Fmax	Fmin	ANGLE
RC ENV~1	Max	Cent	4.1	1.4	1.6	4.2	1.3	12.53
		78	4.6	0.6	1.6	4.7	0.5	8.51
		79	4.6	2.5	1.6	4.8	2.1	13.61
		86	3.5	2.5	1.6	3.8	2.0	22.32
		85	3.5	0.6	1.6	3.6	0.5	11.59
	Min	Cent	-3.3	-0.6	-1.0	-0.6	-3.3	-89.26
		78	-3.7	-0.4	-1.0	-0.4	-3.7	-89.39
		79	-3.7	-1.1	-1.0	-0.9	-3.7	-89.30
		86	-3.0	-1.1	-1.0	-0.9	-3.0	-89.06
		85	-3.0	-0.4	-1.0	-0.4	-3.0	-89.23

	NODE	Mxx	Myy	Mxy	Mmax	Mmin	ANGLE
Max	Cent	11.9	5.4	2.0	12.0	5.3	8.83
	78	10.2	6.8	1.6	10.3	6.7	10.36
	79	13.7	9.5	1.7	13.9	8.5	10.87
	86	14.0	4.4	2.3	14.2	4.3	7.16
	85	9.7	2.1	2.3	9.9	1.9	7.99
Min	Cent	-3.0	1.4	-0.4	1.8	-3.0	-88.45
	78	-3.2	2.7	-0.2	2.7	-3.2	-88.12
	79	-2.3	-0.5	-0.3	2.2	-2.3	-86.69
	86	-1.6	0.7	-0.5	1.4	-1.6	88.34
	85	-4.8	-0.4	-0.6	-0.4	-4.8	88.09

	NODE	Vxx	Vyy
Max	Cent	-3.3	10.1
	78	-1.8	8.4
	79	-1.8	15.1
	86	-3.5	15.1
	85	-3.5	8.4
Min	Cent	-9.3	-0.4
	78	-9.7	4.9
	79	-9.7	-6.1
	86	-10.0	-6.1
	85	-10.0	4.9

LC		NODE	Fxx	Fyy	Fxy	Fmax	Fmin	ANGLE
RC ENV~2	Max	Cent	2.0	0.9	0.5	2.1	0.2	4.67
		78	2.4	0.3	0.5	2.4	0.0	3.83
		79	2.4	1.4	0.5	2.4	0.6	4.19
		86	1.7	1.4	0.5	1.7	0.5	5.96
		85	1.7	0.3	0.5	1.7	-0.0	5.27
	Min	Cent	-0.8	-0.1	0.1	0.7	-0.9	67.47
		78	-0.9	-0.1	0.1	0.4	-1.0	55.42
		79	-0.9	-0.1	0.1	0.9	-0.9	47.87
		86	-0.7	-0.1	0.1	0.8	-0.8	38.96
		85	-0.7	-0.1	0.1	0.4	-0.9	56.36

	NODE	Mxx	Myy	Mxy	Mmax	Mmin	ANGLE
Max	Cent	7.9	3.9	1.0	8.1	3.8	10.82
	78	6.6	4.9	0.8	6.8	4.8	16.53
	79	9.4	6.3	1.0	9.6	6.1	13.18

		86	9.6	3.2	1.2	9.8	3.1	8.10
		85	6.2	1.4	1.0	6.3	1.3	9.91
	Min	Cent	1.8	2.6	0.2	3.0	1.4	60.86
		78	0.3	3.5	0.0	3.6	0.2	80.18
		79	3.6	4.3	0.2	4.5	3.2	55.68
		86	3.6	2.0	0.5	4.0	1.6	24.01
		85	-0.5	0.4	0.3	0.9	-0.9	61.08

		NODE	Vxx	Vyy
	Max	Cent	-3.5	6.3
		78	-2.7	6.2
		79	-2.7	6.6
		86	-4.3	6.6
		85	-4.3	6.2
	Min	Cent	-7.0	4.3
		78	-6.6	5.2
		79	-6.6	3.0
		86	-7.6	3.0
		85	-7.6	5.2

ELEM	MAT	SEC	LC		NODE	Fxx	Fyy	Fxy	Fmax	Fmin	ANGLE
72	1	1	SX (RS)		Cent	6.1	0.1	2.8	7.2	-1.0	21.32
					79	12.1	1.1	2.8	12.8	0.4	13.28
					16	12.1	1.2	2.8	12.8	0.5	13.40
					37	0.3	1.2	2.8	3.5	-2.0	49.46
					86	0.3	1.1	2.8	3.5	-2.1	48.89

		NODE	Mxx	Myy	Mxy	Mmax	Mmin	ANGLE
		Cent	9.1	1.3	1.4	9.4	1.0	9.88
		79	6.8	2.4	1.6	7.3	1.9	17.80
		16	27.7	4.2	5.0	28.7	3.2	11.50
		37	3.6	1.0	5.2	7.6	-3.0	37.83
		86	5.7	0.6	1.4	6.0	0.2	14.05

		NODE	Vxx	Vyy
		Cent	10.3	1.6
		79	36.9	5.0
		16	36.9	2.0
		37	16.3	2.0
		86	16.3	5.0

LC		NODE	Fxx	Fyy	Fxy	Fmax	Fmin	ANGLE
SY (RS)		Cent	0.8	2.7	3.0	4.9	-1.4	53.99
		79	1.7	1.8	3.0	4.7	-1.2	45.78
		16	1.7	7.2	3.0	8.5	0.4	66.54
		37	0.2	7.2	3.0	8.3	-0.9	69.93
		86	0.2	1.8	3.0	4.1	-2.1	52.78

		NODE	Mxx	Myy	Mxy	Mmax	Mmin	ANGLE
		Cent	1.9	4.0	1.8	5.1	0.9	60.03
		79	1.3	5.0	4.5	8.0	-1.7	56.27
		16	5.6	18.6	4.4	20.0	4.3	73.15
		37	2.8	1.4	0.8	3.1	1.0	23.29
		86	0.8	1.1	0.5	1.5	0.4	53.61

		NODE	Vxx	Vyy
		Cent	4.1	9.9
		79	3.5	10.6
		16	3.5	30.4
		37	5.0	30.4
		86	5.0	10.6

LC		NODE	Fxx	Fyy	Fxy	Fmax	Fmin	ANGLE
RC ENV~1	Max	Cent	6.8	2.0	3.6	8.1	-0.9	21.36
		79	13.1	2.6	3.6	14.1	1.0	15.60
		16	13.1	4.9	3.6	13.9	0.0	12.85
		37	0.8	4.9	3.6	7.0	-1.6	60.78
		86	0.8	2.6	3.6	5.3	0.6	53.08

Min	Cent	-5.4	-3.5	-2.3	-0.0	-6.3	-68.74
	79	-11.1	-1.1	-2.3	0.1	-11.5	-79.37
	16	-11.1	-9.5	-2.3	-2.9	-11.7	-75.62
	37	-0.0	-9.5	-2.3	0.5	-10.0	7.43
	86	-0.0	-1.1	-2.3	1.0	-2.9	-47.42

	NODE	Mxx	Myy	Mxy	Mmax	Mmin	ANGLE
Max	Cent	16.4	9.6	2.8	16.7	9.5	10.37
	79	10.9	9.2	4.7	11.9	7.9	59.99
	16	40.0	33.8	4.8	41.1	27.3	12.36
	37	13.6	0.7	6.2	14.6	0.3	14.49
	86	14.2	4.4	2.8	14.8	4.0	13.44
Min	Cent	-3.1	1.1	-0.9	3.9	-3.1	-85.97
	79	-4.3	-0.9	-4.3	2.0	-4.6	-77.79
	16	-15.3	-3.5	-5.2	8.5	-16.3	-20.79
	37	1.7	-2.0	-4.1	2.5	-4.4	3.57
	86	-1.6	0.9	0.1	1.4	-1.6	88.45

	NODE	Vxx	Vyy
Max	Cent	1.9	27.1
	79	23.1	15.1
	16	23.1	56.4
	37	13.1	56.4
	86	13.1	15.1
Min	Cent	-18.8	5.3
	79	-50.6	-6.1
	16	-50.6	-4.4
	37	-19.4	-4.4
	86	-19.4	-6.1

LC		NODE	Fxx	Fyy	Fxy	Fmax	Fmin	ANGLE
RC ENV~2	Max	Cent	3.4	-0.6	1.8	3.5	-0.7	-6.30
		79	6.5	1.4	1.8	6.6	0.8	-4.44
		16	6.5	-1.5	1.8	6.6	-1.5	-3.17
		37	0.6	-1.5	1.8	1.2	-1.6	21.69
		86	0.6	1.4	1.8	2.8	0.4	51.40
	Min	Cent	-1.4	-1.2	-0.7	0.6	-2.9	50.21
		79	-3.2	0.2	-0.7	1.4	-3.8	65.34
		16	-3.2	-3.7	-0.7	-1.3	-5.0	41.87
		37	0.3	-3.7	-0.7	0.4	-4.2	9.73
		86	0.3	0.2	-0.7	0.6	-0.9	-55.82

	NODE	Mxx	Myy	Mxy	Mmax	Mmin	ANGLE
Max	Cent	11.6	7.1	1.5	11.8	6.9	11.48
	79	7.4	5.9	0.7	7.6	5.7	19.74
	16	24.2	21.2	1.8	24.9	19.9	-20.42
	37	9.6	-0.3	3.1	10.2	-0.8	14.20
	86	9.7	3.2	2.0	10.2	2.8	14.56
Min	Cent	4.7	5.0	0.7	6.2	3.3	39.77
	79	1.9	3.9	-0.6	3.9	1.9	-89.15
	16	3.6	13.7	-1.8	14.0	3.3	80.02
	37	5.1	-1.1	-0.3	5.2	-1.3	6.81
	86	3.7	2.0	1.0	4.4	1.3	29.27

	NODE	Vxx	Vyy
Max	Cent	-2.9	20.0
	79	1.3	6.6
	16	1.3	35.2
	37	3.0	35.2
	86	3.0	6.6
Min	Cent	-12.3	15.0
	79	-26.7	3.0
	16	-26.7	25.8
	37	-8.0	25.8
	86	-8.0	3.0

ELEM	MAT	SEC	LC		NODE	Fxx	Fyy	Fxy	Fmax	Fmin	ANGLE
73	1	1	SX (RS)		Cent	0.4	0.1	0.2	0.5	0.0	23.14
					65	0.9	0.1	0.2	0.9	0.1	11.82
					80	0.9	0.3	0.2	0.9	0.2	15.09
					87	0.2	0.3	0.2	0.4	0.1	50.33

		26	0.2	0.1	0.2	0.3	-0.0	34.66

	NODE	Mxx	Myy	Mxy	Mmax	Mmin	ANGLE
	Cent	0.1	0.1	0.2	0.3	-0.1	44.04
	65	3.7	0.7	0.4	3.8	0.7	8.08
	80	2.1	1.0	0.4	2.2	0.9	18.28
	87	0.4	0.2	0.4	0.8	-0.1	39.64
	26	1.7	0.3	0.4	1.8	0.2	14.33

	NODE	Vxx	Vyy
	Cent	3.8	0.8
	65	9.7	0.0
	80	9.7	1.6
	87	2.1	1.6
	26	2.1	0.0

LC		NODE	Fxx	Fyy	Fxy	Fmax	Fmin	ANGLE
SY (RS)		Cent	4.7	0.8	0.8	4.9	0.6	10.69
		65	3.7	1.3	0.8	4.0	1.1	16.33
		80	3.7	0.2	0.8	3.9	0.1	11.90
		87	5.7	0.2	0.8	5.8	0.1	7.88
		26	5.7	1.3	0.8	5.9	1.2	9.72

	NODE	Mxx	Myy	Mxy	Mmax	Mmin	ANGLE
	Cent	5.4	1.4	0.3	5.4	1.3	3.67
	65	8.2	3.4	0.4	8.3	3.3	4.55
	80	2.5	1.9	0.2	2.5	1.8	13.26
	87	5.0	0.6	0.2	5.0	0.6	2.15
	26	6.1	0.4	0.2	6.1	0.4	2.13

	NODE	Vxx	Vyy
	Cent	6.3	4.6
	65	10.2	6.0
	80	10.2	3.3
	87	2.4	3.3
	26	2.4	6.0

LC		NODE	Fxx	Fyy	Fxy	Fmax	Fmin	ANGLE
RC ENV~1	Max	Cent	5.2	0.7	0.6	5.3	0.6	7.72
		65	4.1	1.1	0.6	4.2	1.0	11.48
		80	4.1	0.3	0.6	4.2	0.3	9.05
		87	6.4	0.3	0.6	6.4	0.3	5.80
		26	6.4	1.1	0.6	6.5	1.0	6.73
	Min	Cent	-4.2	-0.9	-0.9	-0.6	-4.5	-75.62
		65	-3.4	-1.5	-0.9	-1.2	-3.8	-67.66
		80	-3.4	-0.3	-0.9	-0.1	-3.6	-55.49
		87	-5.1	-0.3	-0.9	-0.1	-5.2	-79.58
		26	-5.1	-1.5	-0.9	-1.3	-5.3	-76.20

	NODE	Mxx	Myy	Mxy	Mmax	Mmin	ANGLE
Max	Cent	7.4	2.2	0.3	8.3	2.2	-19.15
	65	11.7	5.1	0.4	11.7	5.1	3.11
	80	7.5	3.7	0.1	8.7	3.0	-24.70
	87	9.6	0.7	0.5	10.1	0.6	-13.28
	26	8.3	0.1	0.7	8.4	0.0	3.47
Min	Cent	-3.8	-0.5	-2.4	-0.5	-3.9	-85.74
	65	-4.8	-1.7	-2.3	-1.6	-4.9	-82.53
	80	-1.9	0.0	-2.6	0.1	-2.0	-78.84
	87	-4.9	-0.5	-2.4	-0.5	-4.9	-88.92
	26	-3.9	-1.1	-2.1	-0.7	-3.9	88.65

	NODE	Vxx	Vyy
Max	Cent	10.9	7.8
	65	15.4	9.2
	80	15.4	6.4
	87	6.4	6.4
	26	6.4	9.2
Min	Cent	-4.5	-1.5
	65	-5.1	-2.7

		80	-5.1	-0.2			
		87	-10.2	-0.2			
		26	-10.2	-2.7			

LC		NODE	Fxx	Fyy	Fxy	Fmax	Fmin	ANGLE
RC ENV~2	Max	Cent	1.1	-0.1	-0.1	1.1	-0.1	-10.40
		65	0.9	-0.2	-0.1	0.9	-0.2	-11.09
		80	0.9	0.1	-0.1	0.9	0.0	-14.54
		87	1.4	0.1	-0.1	1.4	0.1	-10.06
		26	1.4	-0.2	-0.1	1.4	-0.2	-7.70
	Min	Cent	0.5	-0.2	-0.2	0.5	-0.2	-13.17
		65	0.3	-0.4	-0.2	0.3	-0.4	-14.12
		80	0.3	-0.1	-0.2	0.3	-0.1	-27.74
		87	0.7	-0.1	-0.2	0.7	-0.1	-11.82
		26	0.7	-0.4	-0.2	0.7	-0.4	-9.31

	NODE	Mxx	Myy	Mxy	Mmax	Mmin	ANGLE
Max	Cent	5.0	1.1	0.0	5.5	0.9	-18.56
	65	7.3	2.3	0.0	7.4	2.2	-9.14
	80	4.9	2.5	-0.2	5.7	1.9	-26.20
	87	6.1	0.5	0.1	6.4	0.1	-13.09
	26	4.0	-0.3	0.3	4.1	-0.3	-8.31
Min	Cent	1.5	0.8	-1.5	1.5	0.4	1.10
	65	3.2	1.6	-1.5	3.2	1.3	-2.30
	80	0.4	1.6	-1.7	1.9	0.4	-79.92
	87	0.0	0.1	-1.5	0.1	-0.0	60.32
	26	1.6	-0.7	-1.3	1.7	-1.1	-9.72

	NODE	Vxx	Vyy
Max	Cent	5.0	4.2
	65	7.4	4.1
	80	7.4	4.3
	87	4.2	4.3
	26	4.2	4.1
Min	Cent	-2.1	3.0
	65	1.0	3.2
	80	1.0	2.8
	87	-5.7	2.8
	26	-5.7	3.2

ELEM	MAT	SEC	LC		NODE	Fxx	Fyy	Fxy	Fmax	Fmin	ANGLE
74	1	1	SX (RS)		Cent	0.5	0.0	0.3	0.7	-0.1	25.08
					80	0.8	0.3	0.3	0.9	0.2	26.19
					81	0.8	0.2	0.3	0.9	0.1	23.59
					88	1.1	0.2	0.3	1.2	0.1	16.46
					87	1.1	0.3	0.3	1.2	0.2	17.87

	NODE	Mxx	Myy	Mxy	Mmax	Mmin	ANGLE
	Cent	0.8	0.3	0.3	0.9	0.2	22.65
	80	1.8	1.0	0.1	1.8	0.9	10.01
	81	0.3	0.2	0.3	0.5	-0.0	42.22
	88	0.5	0.1	0.3	0.7	-0.1	27.10
	87	0.6	0.2	0.2	0.6	0.1	20.21

	NODE	Vxx	Vyy
	Cent	1.4	1.0
	80	2.6	1.6
	81	2.6	0.3
	88	0.4	0.3
	87	0.4	1.6

LC		NODE	Fxx	Fyy	Fxy	Fmax	Fmin	ANGLE
SY (RS)		Cent	3.4	0.1	1.2	3.8	-0.3	17.79
		80	2.7	0.6	1.2	3.2	0.1	24.53
		81	2.7	0.6	1.2	3.2	0.1	24.79
		88	4.4	0.6	1.2	4.7	0.3	16.09
		87	4.4	0.6	1.2	4.7	0.3	15.96

	NODE	Mxx	Myy	Mxy	Mmax	Mmin	ANGLE

	Cent	2.6	0.7	0.8	2.9	0.4	20.49
	80	4.6	2.3	0.9	4.9	2.0	19.98
	81	1.3	0.3	1.0	2.0	-0.3	32.00
	88	1.1	0.1	0.8	1.5	-0.4	28.08
	87	4.6	0.5	0.7	4.7	0.4	9.38

	NODE	Vxx	Vyy
	Cent	7.0	1.5
	80	6.8	3.3
	81	6.8	0.5
	88	7.1	0.5
	87	7.1	3.3

LC		NODE	Fxx	Fyy	Fxy	Fmax	Fmin	ANGLE
RC ENV~1	Max	Cent	3.6	0.2	1.0	3.8	0.1	14.89
		80	2.6	0.5	1.0	3.0	0.2	21.58
		81	2.6	0.8	1.0	3.0	0.4	23.47
		88	4.7	0.8	1.0	4.9	0.6	13.20
		87	4.7	0.5	1.0	4.9	0.3	12.49
	Min	Cent	-3.3	-0.1	-1.4	0.3	-3.8	-55.55
		80	-2.7	-0.7	-1.4	-0.1	-3.4	-56.37
		81	-2.7	-0.5	-1.4	0.2	-3.4	-63.11
		88	-4.1	-0.5	-1.4	-0.0	-4.6	-71.13
		87	-4.1	-0.7	-1.4	-0.2	-4.6	-70.39

		NODE	Mxx	Myy	Mxy	Mmax	Mmin	ANGLE
	Max	Cent	5.8	1.3	1.0	6.6	0.7	-20.69
		80	7.9	4.1	1.0	8.7	3.3	-20.93
		81	3.3	1.4	1.3	4.1	0.6	-30.49
		88	6.7	0.8	1.2	7.2	0.4	-14.72
		87	5.5	0.6	0.8	6.2	0.5	-18.09
	Min	Cent	-4.3	-0.0	-2.0	0.1	-4.4	-81.71
		80	-4.5	-0.6	-2.0	-0.4	-4.7	-78.01
		81	-5.2	0.3	-1.6	0.3	-5.2	89.51
		88	-4.5	0.1	-1.7	0.1	-4.5	88.76
		87	-4.3	-0.4	-2.1	-0.3	-4.3	-81.89

		NODE	Vxx	Vyy
	Max	Cent	13.5	3.9
		80	13.3	6.4
		81	13.3	2.3
		88	13.8	2.3
		87	13.8	6.4
	Min	Cent	-0.4	0.4
		80	-0.3	-0.2
		81	-0.3	0.3
		88	-2.8	0.3
		87	-2.8	-0.2

LC		NODE	Fxx	Fyy	Fxy	Fmax	Fmin	ANGLE
RC ENV~2	Max	Cent	0.6	0.1	-0.1	0.7	0.0	-31.09
		80	0.4	0.0	-0.1	0.5	0.0	-21.32
		81	0.4	0.3	-0.1	0.6	0.0	-54.40
		88	1.0	0.3	-0.1	1.1	0.1	-25.18
		87	1.0	0.0	-0.1	1.1	-0.0	-17.82
	Min	Cent	0.1	0.0	-0.4	0.3	-0.2	-38.90
		80	-0.1	-0.2	-0.4	0.1	-0.5	-44.67
		81	-0.1	0.1	-0.4	0.3	-0.3	-55.26
		88	0.2	0.1	-0.4	0.2	-0.0	-29.54
		87	0.2	-0.2	-0.4	0.2	-0.3	-26.04

		NODE	Mxx	Myy	Mxy	Mmax	Mmin	ANGLE
	Max	Cent	3.4	1.0	0.2	3.9	0.5	-22.61
		80	5.0	2.5	0.1	5.6	2.1	-22.40
		81	1.4	1.0	0.3	2.1	0.3	-40.07
		88	3.7	0.6	0.4	3.9	0.3	-16.30
		87	3.6	0.1	0.1	4.0	0.1	-17.65
	Min	Cent	-1.8	0.6	-1.2	0.7	-1.8	84.85
		80	-0.1	1.6	-1.3	1.7	-0.1	87.91
		81	-3.9	0.5	-1.0	0.6	-3.9	86.16

		88	-3.4	0.2	-1.0	0.2	-3.5	83.61
		87	0.3	-0.1	-1.3	0.4	-0.5	31.56

	NODE	Vxx	Vyy
Max	Cent	7.0	2.8
	80	8.0	4.3
	81	8.0	1.6
	88	6.9	1.6
	87	6.9	4.3
Min	Cent	1.8	1.9
	80	4.0	2.8
	81	4.0	0.8
	88	-0.6	0.8
	87	-0.6	2.8

ELEM	MAT	SEC	LC		NODE	Fxx	Fyy	Fxy	Fmax	Fmin	ANGLE
75	1	1	SX (RS)		Cent	0.9	0.1	0.1	1.0	0.1	9.43
					81	0.7	0.3	0.1	0.7	0.3	16.72
					82	0.7	0.0	0.1	0.7	0.0	11.27
					89	1.2	0.0	0.1	1.2	0.0	6.77
					88	1.2	0.3	0.1	1.2	0.3	8.54

	NODE	Mxx	Myy	Mxy	Mmax	Mmin	ANGLE
	Cent	0.5	0.1	0.2	0.6	0.0	23.25
	81	0.3	0.2	0.3	0.5	-0.0	41.80
	82	1.2	0.1	0.2	1.3	0.1	11.55
	89	1.0	0.1	0.1	1.0	0.0	9.23
	88	0.1	0.0	0.2	0.3	-0.1	37.02

	NODE	Vxx	Vyy
	Cent	2.1	0.3
	81	2.3	0.3
	82	2.3	0.2
	89	1.8	0.2
	88	1.8	0.3

LC		NODE	Fxx	Fyy	Fxy	Fmax	Fmin	ANGLE
SY (RS)		Cent	3.0	0.2	0.4	3.0	0.1	7.79
		81	2.6	0.4	0.4	2.7	0.4	9.86
		82	2.6	0.2	0.4	2.7	0.1	8.96
		89	3.5	0.2	0.4	3.5	0.1	6.69
		88	3.5	0.4	0.4	3.5	0.4	7.19

	NODE	Mxx	Myy	Mxy	Mmax	Mmin	ANGLE
	Cent	1.3	0.2	1.4	2.3	-0.8	34.41
	81	1.1	0.3	1.3	2.1	-0.7	35.78
	82	1.4	0.5	1.4	2.4	-0.6	36.12
	89	2.1	0.3	1.4	2.9	-0.4	28.75
	88	2.8	0.5	1.3	3.4	-0.1	23.97

	NODE	Vxx	Vyy
	Cent	4.0	0.6
	81	0.8	0.5
	82	0.8	0.7
	89	7.2	0.7
	88	7.2	0.5

LC		NODE	Fxx	Fyy	Fxy	Fmax	Fmin	ANGLE
RC ENV~1	Max	Cent	3.0	0.3	0.3	3.0	0.2	7.12
		81	2.7	0.5	0.3	2.7	0.5	8.93
		82	2.7	0.2	0.3	2.7	0.1	7.74
		89	3.3	0.2	0.3	3.4	0.2	6.17
		88	3.3	0.5	0.3	3.4	0.5	6.91
	Min	Cent	-3.0	-0.1	-0.4	-0.1	-3.1	-81.59
		81	-2.5	-0.3	-0.4	-0.2	-2.6	-79.27
		82	-2.5	-0.2	-0.4	-0.1	-2.6	-79.78
		89	-3.6	-0.2	-0.4	-0.1	-3.6	-82.82
		88	-3.6	-0.3	-0.4	-0.2	-3.7	-82.57

	NODE	Mxx	Myy	Mxy	Mmax	Mmin	ANGLE
Max	Cent	4.0	0.7	2.2	4.1	0.6	-10.09
	81	4.4	1.6	2.0	4.6	1.4	-16.39
	82	3.4	0.8	2.2	3.5	0.7	-7.82
	89	4.6	0.3	2.2	4.7	0.2	-6.90
	88	3.9	0.8	2.0	4.1	0.3	-14.34
Min	Cent	-5.5	0.0	-0.8	0.1	-5.6	-83.45
	81	-4.8	0.3	-0.9	0.4	-4.9	-83.41
	82	-6.3	-0.4	-0.6	-0.4	-6.4	-84.44
	89	-7.8	-0.5	-0.7	-0.4	-7.8	-85.25
	88	-5.4	-0.1	-1.0	-0.0	-5.5	-83.26

	NODE	Vxx	Vyy
Max	Cent	7.7	1.8
	81	4.5	2.3
	82	4.5	1.4
	89	12.6	1.4
	88	12.6	2.3
Min	Cent	-0.3	-0.2
	81	-0.2	0.3
	82	-0.2	-0.7
	89	-1.8	-0.7
	88	-1.8	0.3

LC		NODE	Fxx	Fyy	Fxy	Fmax	Fmin	ANGLE
RC ENV~2	Max	Cent	0.4	0.1	-0.0	0.5	0.1	-9.12
		81	0.5	0.3	-0.0	0.5	0.2	-10.25
		82	0.5	0.0	-0.0	0.5	0.0	-6.33
		89	0.4	0.0	-0.0	0.4	0.0	-5.47
		88	0.4	0.3	-0.0	0.4	0.2	-8.81
	Min	Cent	-0.1	0.0	-0.1	0.0	-0.1	-57.92
		81	0.0	0.0	-0.1	0.1	0.0	-59.33
		82	0.0	-0.0	-0.1	0.1	-0.0	-32.21
		89	-0.2	-0.0	-0.1	0.0	-0.2	-77.61
		88	-0.2	0.0	-0.1	0.0	-0.2	-82.19

	NODE	Mxx	Myy	Mxy	Mmax	Mmin	ANGLE
Max	Cent	1.8	0.5	0.8	1.8	0.4	-10.27
	81	2.1	1.1	0.7	2.2	1.0	-21.16
	82	1.3	0.5	0.8	1.3	0.5	-6.12
	89	1.9	0.2	0.8	1.9	0.1	-6.24
	88	2.0	0.4	0.7	2.1	0.1	-15.03
Min	Cent	-4.3	0.2	-0.4	0.3	-4.4	80.95
	81	-3.7	0.6	-0.4	0.7	-3.8	80.57
	82	-5.2	-0.0	-0.2	0.1	-5.3	81.55
	89	-5.8	-0.1	-0.3	-0.0	-5.9	82.16
	88	-2.6	0.2	-0.5	0.3	-2.7	-79.11

	NODE	Vxx	Vyy
Max	Cent	4.1	1.2
	81	3.2	1.6
	82	3.2	0.9
	89	5.6	0.9
	88	5.6	1.6
Min	Cent	0.5	0.4
	81	1.0	0.8
	82	1.0	0.0
	89	-0.0	0.0
	88	-0.0	0.8

ELEM	MAT	SEC	LC		NODE	Fxx	Fyy	Fxy	Fmax	Fmin	ANGLE
76	1	1	SX (RS)		Cent	1.5	0.0	0.1	1.5	0.0	5.81
					82	1.2	0.1	0.1	1.3	0.1	7.07
					83	1.2	0.1	0.1	1.3	0.1	7.12
					90	1.7	0.1	0.1	1.7	0.1	5.32
					89	1.7	0.1	0.1	1.7	0.1	5.29

	NODE	Mxx	Myy	Mxy	Mmax	Mmin	ANGLE
	Cent	1.8	0.1	0.2	1.8	0.0	6.20

```
                    82        1.2        0.1        0.2        1.2        0.1       9.92
                    83        2.4        0.1        0.2        2.4        0.1       5.40
                    90        2.3        0.0        0.2        2.3        0.0       4.39
                    89        1.3        0.1        0.1        1.3        0.0       6.93

                  NODE        Vxx        Vyy
            ---- ------ ---------- ----------
                  Cent        1.9        0.2
                    82        2.1        0.2
                    83        2.1        0.2
                    90        1.8        0.2
                    89        1.8        0.2


      LC        NODE        Fxx        Fyy        Fxy       Fmax       Fmin      ANGLE
-------- ---- ------ ---------- ---------- ---------- ---------- ---------- ----------
      SY (RS)   Cent        2.8        0.2        0.2        2.8        0.2       4.14
                  82        2.3        0.2        0.2        2.3        0.2       5.26
                  83        2.3        0.1        0.2        2.3        0.1       5.02
                  90        3.3        0.1        0.2        3.3        0.1       3.36
                  89        3.3        0.2        0.2        3.3        0.2       3.47

                  NODE        Mxx        Myy        Mxy       Mmax       Mmin      ANGLE
            ---- ------ ---------- ---------- ---------- ---------- ---------- ----------
                  Cent        1.5        0.3        1.3        2.4       -0.5      33.06
                  82        1.3        0.5        1.3        2.2       -0.5      36.67
                  83        1.5        0.6        1.2        2.4       -0.3      34.49
                  90        2.4        0.3        1.3        3.0       -0.3      25.12
                  89        2.0        0.2        1.3        2.7       -0.5      27.99

                  NODE        Vxx        Vyy
            ---- ------ ---------- ----------
                  Cent        2.7        0.8
                  82        0.4        0.7
                  83        0.4        0.9
                  90        5.3        0.9
                  89        5.3        0.7


      LC        NODE        Fxx        Fyy        Fxy       Fmax       Fmin      ANGLE
-------- ---- ------ ---------- ---------- ---------- ---------- ---------- ----------
RC ENV~1  Max   Cent        2.7        0.2        0.2        2.7        0.2       4.36
                  82        2.3        0.2        0.2        2.3        0.2       5.24
                  83        2.3        0.2        0.2        2.3        0.1       5.06
                  90        3.1        0.2        0.2        3.2        0.1       3.67
                  89        3.1        0.2        0.2        3.2        0.2       3.77
           Min   Cent       -2.8       -0.2       -0.2       -0.2       -2.8     -86.07
                  82       -2.2       -0.2       -0.2       -0.2       -2.2     -84.73
                  83       -2.2       -0.1       -0.2       -0.1       -2.2     -85.02
                  90       -3.5       -0.1       -0.2       -0.1       -3.5     -86.91
                  89       -3.5       -0.2       -0.2       -0.2       -3.5     -86.80

                  NODE        Mxx        Myy        Mxy       Mmax       Mmin      ANGLE
            ---- ------ ---------- ---------- ---------- ---------- ---------- ----------
           Max   Cent        4.3        0.5        2.2        4.3        0.5      -1.57
                  82        3.9        0.9        2.2        3.9        0.9      -2.54
                  83        4.6        0.8        2.1        4.6        0.8       0.05
                  90        5.0        0.2        2.1        5.0        0.2      -0.74
                  89        3.9        0.4        2.2        3.9        0.1      -3.05
           Min   Cent       -6.7       -0.3       -0.5       -0.3       -6.8     -85.75
                  82       -6.4       -0.5       -0.4       -0.5       -6.4     -85.71
                  83       -7.1       -0.6       -0.4       -0.6       -7.1     -86.19
                  90       -8.1       -0.5       -0.4       -0.5       -8.1     -86.77
                  89       -6.2       -0.1       -0.5       -0.0       -6.2     -85.37

                  NODE        Vxx        Vyy
            ---- ------ ---------- ----------
           Max   Cent        3.7        1.3
                  82        1.3        1.4
                  83        1.3        1.3
                  90        7.9        1.3
                  89        7.9        1.4
           Min   Cent       -1.8       -0.8
                  82       -2.8       -0.7
                  83       -2.8       -1.0
                  90       -2.8       -1.0
                  89       -2.8       -0.7
```

LC		NODE	Fxx	Fyy	Fxy	Fmax	Fmin	ANGLE
RC ENV~2	Max	Cent	0.5	0.0	0.0	0.5	0.0	2.17
		82	0.6	0.0	0.0	0.6	0.0	2.03
		83	0.6	0.0	0.0	0.6	0.0	1.99
		90	0.5	0.0	0.0	0.5	0.0	3.17
		89	0.5	0.0	0.0	0.5	0.0	3.44
	Min	Cent	-0.3	0.0	-0.0	0.0	-0.3	-86.53
		82	-0.1	-0.0	-0.0	-0.0	-0.1	-75.38
		83	-0.1	-0.0	-0.0	0.0	-0.1	89.68
		90	-0.4	-0.0	-0.0	0.0	-0.4	85.38
		89	-0.4	-0.0	-0.0	-0.0	-0.4	-87.95

		NODE	Mxx	Myy	Mxy	Mmax	Mmin	ANGLE
	Max	Cent	1.9	0.3	0.9	1.9	0.3	3.37
		82	1.5	0.6	0.9	1.5	0.6	4.00
		83	2.1	0.5	0.9	2.1	0.5	5.74
		90	2.2	0.1	0.8	2.2	0.1	3.06
		89	1.7	0.2	0.8	1.7	0.1	0.84
	Min	Cent	-5.2	-0.0	-0.0	0.1	-5.3	80.95
		82	-5.3	-0.0	-0.1	0.1	-5.4	80.83
		83	-5.0	-0.1	0.0	0.1	-5.1	80.86
		90	-5.9	-0.2	-0.0	-0.1	-6.0	82.29
		89	-4.4	0.1	-0.1	0.1	-4.5	83.23

		NODE	Vxx	Vyy
	Max	Cent	1.1	0.8
		82	0.3	0.9
		83	0.3	0.8
		90	2.7	0.8
		89	2.7	0.9
	Min	Cent	-0.9	-0.1
		82	-1.3	0.0
		83	-1.3	-0.1
		90	-0.8	-0.1
		89	-0.8	0.0

ELEM	MAT	SEC	LC		NODE	Fxx	Fyy	Fxy	Fmax	Fmin	ANGLE
77	1	1	SX (RS)		Cent	2.0	0.0	0.1	2.0	0.0	2.82
					83	1.8	0.0	0.1	1.8	0.0	3.15
					84	1.8	0.1	0.1	1.8	0.1	3.27
					91	2.2	0.1	0.1	2.2	0.1	2.63
					90	2.2	0.0	0.1	2.2	0.0	2.56

	NODE	Mxx	Myy	Mxy	Mmax	Mmin	ANGLE
	Cent	3.0	0.1	0.3	3.0	0.1	6.11
	83	2.3	0.1	0.3	2.4	0.1	7.16
	84	3.5	0.3	0.3	3.5	0.3	6.02
	91	3.4	0.0	0.3	3.4	0.0	5.13
	90	2.6	0.1	0.2	2.6	0.1	5.64

	NODE	Vxx	Vyy
	Cent	1.7	0.3
	83	2.0	0.2
	84	2.0	0.5
	91	1.6	0.5
	90	1.6	0.2

LC		NODE	Fxx	Fyy	Fxy	Fmax	Fmin	ANGLE
SY (RS)		Cent	2.4	0.2	0.2	2.5	0.2	5.07
		83	1.9	0.1	0.2	1.9	0.1	6.45
		84	1.9	0.2	0.2	1.9	0.2	6.92
		91	3.1	0.2	0.2	3.1	0.2	4.11
		90	3.1	0.1	0.2	3.1	0.1	3.94

	NODE	Mxx	Myy	Mxy	Mmax	Mmin	ANGLE
	Cent	1.6	0.3	1.2	2.3	-0.4	30.83
	83	1.5	0.6	1.1	2.3	-0.2	33.73
	84	1.5	0.5	1.1	2.2	-0.2	33.72
	91	2.2	0.3	1.1	2.7	-0.2	24.81

		90	2.1	0.2	1.2	2.7	-0.3	25.59

	NODE	Vxx	Vyy
	Cent	2.0	0.9
	83	0.4	0.9
	84	0.4	0.8
	91	4.4	0.8
	90	4.4	0.9

LC		NODE	Fxx	Fyy	Fxy	Fmax	Fmin	ANGLE
RC ENV~1	Max	Cent	2.4	0.2	0.2	2.4	0.2	5.87
		83	2.0	0.1	0.2	2.0	0.1	7.07
		84	2.0	0.2	0.2	2.0	0.2	7.37
		91	2.9	0.2	0.2	2.9	0.2	4.94
		90	2.9	0.1	0.2	2.9	0.1	4.80
	Min	Cent	-2.5	-0.2	-0.2	-0.2	-2.5	-85.72
		83	-1.8	-0.1	-0.2	-0.1	-1.8	-84.22
		84	-1.8	-0.3	-0.2	-0.2	-1.8	-83.60
		91	-3.2	-0.3	-0.2	-0.3	-3.2	-86.65
		90	-3.2	-0.1	-0.2	-0.1	-3.2	-86.83

	NODE	Mxx	Myy	Mxy	Mmax	Mmin	ANGLE
Max	Cent	5.9	0.6	2.1	5.9	0.6	3.77
	83	4.6	0.8	2.0	4.6	0.8	4.11
	84	6.9	1.3	2.0	6.9	1.3	4.65
	91	6.8	0.1	1.9	6.8	0.1	3.28
	90	5.2	0.4	2.0	5.3	0.2	2.27
Min	Cent	-6.9	-0.3	-0.3	-0.3	-6.9	-86.62
	83	-7.3	-0.7	-0.3	-0.7	-7.4	-87.28
	84	-6.4	-0.2	-0.2	-0.2	-6.5	-86.83
	91	-7.3	-0.5	-0.3	-0.4	-7.3	-86.64
	90	-6.6	-0.1	-0.4	-0.0	-6.6	-86.41

	NODE	Vxx	Vyy
Max	Cent	0.1	1.8
	83	-1.6	1.3
	84	-1.6	2.2
	91	4.1	2.2
	90	4.1	1.3
Min	Cent	-4.0	-0.7
	83	-5.6	-1.0
	84	-5.6	-0.3
	91	-4.8	-0.3
	90	-4.8	-1.0

LC		NODE	Fxx	Fyy	Fxy	Fmax	Fmin	ANGLE
RC ENV~2	Max	Cent	0.8	0.0	0.1	0.8	-0.0	3.25
		83	0.9	0.0	0.1	0.9	0.0	3.08
		84	0.9	0.0	0.1	0.9	-0.0	2.75
		91	0.7	0.0	0.1	0.7	-0.0	2.67
		90	0.7	0.0	0.1	0.7	0.0	3.01
	Min	Cent	-0.4	-0.0	0.0	0.0	-0.4	80.04
		83	-0.3	0.0	0.0	0.0	-0.3	86.56
		84	-0.3	-0.1	0.0	0.0	-0.3	84.06
		91	-0.6	-0.1	0.0	-0.0	-0.6	77.87
		90	-0.6	0.0	0.0	0.0	-0.6	88.37

	NODE	Mxx	Myy	Mxy	Mmax	Mmin	ANGLE
Max	Cent	3.0	0.4	0.9	3.1	0.3	8.08
	83	2.0	0.5	0.9	2.1	0.4	11.80
	84	3.9	0.9	0.9	3.9	0.8	8.46
	91	3.6	0.0	0.8	3.6	0.0	6.16
	90	2.6	0.2	0.8	2.6	0.1	6.22
Min	Cent	-4.3	0.0	0.2	0.2	-4.4	79.62
	83	-5.3	-0.1	0.1	0.0	-5.4	81.24
	84	-3.3	0.3	0.2	0.4	-3.5	77.56
	91	-4.2	-0.2	0.2	-0.0	-4.3	79.82
	90	-4.4	0.1	0.1	0.1	-4.5	82.88

	NODE	Vxx	Vyy

Max	Cent	-1.5	1.2
	83	-2.3	0.8
	84	-2.3	1.5
	91	-0.3	1.5
	90	-0.3	0.8
Min	Cent	-2.8	0.2
	83	-3.8	-0.1
	84	-3.8	0.5
	91	-2.1	0.5
	90	-2.1	-0.1

ELEM	MAT	SEC	LC		NODE	Fxx	Fyy	Fxy	Fmax	Fmin	ANGLE
78	1	1	SX (RS)		Cent	2.3	0.3	0.2	2.4	0.3	4.65
					84	2.4	0.0	0.2	2.4	0.0	4.03
					85	2.4	0.5	0.2	2.4	0.5	5.06
					92	2.3	0.5	0.2	2.3	0.5	5.48
					91	2.3	0.0	0.2	2.3	0.0	4.29

	NODE	Mxx	Myy	Mxy	Mmax	Mmin	ANGLE
	Cent	4.1	0.2	0.5	4.2	0.1	7.54
	84	3.4	0.3	0.5	3.5	0.2	8.93
	85	4.6	0.3	0.6	4.7	0.2	7.86
	92	4.4	0.0	0.5	4.4	-0.0	6.66
	91	4.0	0.2	0.4	4.0	0.1	6.15

	NODE	Vxx	Vyy
	Cent	1.4	0.5
	84	2.1	0.5
	85	2.1	0.5
	92	1.1	0.5
	91	1.1	0.5

LC		NODE	Fxx	Fyy	Fxy	Fmax	Fmin	ANGLE
SY (RS)		Cent	1.9	0.1	0.4	2.0	0.0	12.01
		84	1.4	0.2	0.4	1.5	0.0	16.55
		85	1.4	0.3	0.4	1.5	0.1	17.69
		92	2.4	0.3	0.4	2.5	0.2	9.87
		91	2.4	0.2	0.4	2.5	0.1	9.48

	NODE	Mxx	Myy	Mxy	Mmax	Mmin	ANGLE
	Cent	1.4	0.3	1.1	2.1	-0.4	31.51
	84	1.5	0.6	1.1	2.2	-0.2	33.09
	85	1.2	0.4	1.0	2.0	-0.3	34.37
	92	1.8	0.3	1.1	2.3	-0.3	27.50
	91	2.2	0.3	1.1	2.7	-0.2	24.36

	NODE	Vxx	Vyy
	Cent	2.2	0.8
	84	0.5	0.8
	85	0.5	0.7
	92	4.6	0.7
	91	4.6	0.8

LC		NODE	Fxx	Fyy	Fxy	Fmax	Fmin	ANGLE
RC ENV~1	Max	Cent	2.4	0.3	0.5	2.5	0.3	6.40
		84	2.7	0.2	0.5	2.7	0.0	5.13
		85	2.7	0.6	0.5	2.7	0.6	6.61
		92	2.4	0.6	0.5	2.5	0.6	12.39
		91	2.4	0.2	0.5	2.5	0.1	11.34
	Min	Cent	-2.3	-0.2	-0.3	-0.2	-2.3	-87.17
		84	-2.2	-0.2	-0.3	-0.1	-2.2	-73.08
		85	-2.2	-0.4	-0.3	-0.4	-2.2	-86.74
		92	-2.5	-0.4	-0.3	-0.4	-2.6	-87.02
		91	-2.5	-0.2	-0.3	-0.1	-2.6	-82.34

		NODE	Mxx	Myy	Mxy	Mmax	Mmin	ANGLE
	Max	Cent	8.5	0.9	2.0	8.6	0.8	6.54
		84	6.7	1.3	2.0	6.9	1.2	8.17

		85	10.2	2.0	2.0	10.3	1.9	6.85
		92	9.3	0.2	1.8	9.4	0.1	5.42
		91	7.9	0.4	1.9	8.0	0.3	5.15
	Min	Cent	-5.6	-0.0	-0.2	0.0	-5.6	-85.55
		84	-6.5	-0.3	-0.2	-0.3	-6.5	-87.74
		85	-4.4	0.3	-0.1	0.4	-4.5	-85.43
		92	-5.2	-0.4	-0.3	-0.4	-5.3	-83.18
		91	-6.2	-0.1	-0.3	-0.1	-6.2	-85.71

	NODE	Vxx	Vyy
Max	Cent	-1.9	2.7
	84	-3.5	2.2
	85	-3.5	3.2
	92	2.1	3.2
	91	2.1	2.2
Min	Cent	-6.3	0.1
	84	-7.8	-0.3
	85	-7.8	0.5
	92	-7.1	0.5
	91	-7.1	-0.3

LC		NODE	Fxx	Fyy	Fxy	Fmax	Fmin	ANGLE
RC ENV~2	Max	Cent	1.1	0.2	0.2	1.1	0.0	-0.66
		84	1.3	0.0	0.2	1.3	-0.0	-0.56
		85	1.3	0.3	0.2	1.3	0.1	-0.52
		92	0.8	0.3	0.2	0.8	0.1	-1.93
		91	0.8	0.0	0.2	0.8	-0.0	-2.22
	Min	Cent	-0.5	-0.1	-0.0	0.1	-0.5	65.52
		84	-0.4	-0.0	-0.0	0.0	-0.4	72.76
		85	-0.4	-0.1	-0.0	0.2	-0.4	57.50
		92	-0.6	-0.1	-0.0	0.1	-0.6	47.03
		91	-0.6	-0.0	-0.0	0.0	-0.6	70.95

	NODE	Mxx	Myy	Mxy	Mmax	Mmin	ANGLE
Max	Cent	5.2	0.6	0.9	5.3	0.5	8.87
	84	3.7	0.9	0.9	3.9	0.7	12.64
	85	6.5	1.4	1.0	6.6	1.3	8.76
	92	5.8	0.1	0.8	5.9	0.0	6.89
	91	4.6	0.2	0.8	4.7	0.2	7.36
Min	Cent	-1.9	0.2	0.4	0.5	-2.2	71.51
	84	-3.5	0.2	0.4	0.4	-3.6	77.73
	85	-0.3	0.7	0.4	1.2	-0.7	60.42
	92	-1.2	-0.1	0.4	0.2	-1.6	63.76
	91	-2.7	0.1	0.3	0.2	-2.9	67.10

	NODE	Vxx	Vyy
Max	Cent	-2.8	1.9
	84	-3.8	1.5
	85	-3.8	2.3
	92	-1.8	2.3
	91	-1.8	1.5
Min	Cent	-4.7	0.8
	84	-5.9	0.5
	85	-5.9	1.2
	92	-3.7	1.2
	91	-3.7	0.5

ELEM	MAT	SEC	LC		NODE	Fxx	Fyy	Fxy	Fmax	Fmin	ANGLE
79	1	1	SX (RS)		Cent	2.2	0.0	0.7	2.4	-0.2	16.19
					85	3.5	0.5	0.7	3.6	0.4	12.75
					86	3.5	0.6	0.7	3.6	0.5	13.01
					93	1.1	0.6	0.7	1.6	0.1	35.47
					92	1.1	0.5	0.7	1.6	0.1	34.25

	NODE	Mxx	Myy	Mxy	Mmax	Mmin	ANGLE
	Cent	4.9	0.4	0.6	5.0	0.3	7.46
	85	4.6	0.3	0.6	4.7	0.2	7.76
	86	5.9	1.3	0.4	5.9	1.3	5.13
	93	4.0	0.3	0.5	4.0	0.2	7.67
	92	5.2	0.2	0.7	5.3	0.1	7.72

	NODE	Vxx	Vyy
	Cent	0.4	1.3
	85	2.1	0.5
	86	2.1	2.2
	93	2.5	2.2
	92	2.5	0.5

LC		NODE	Fxx	Fyy	Fxy	Fmax	Fmin	ANGLE
SY (RS)		Cent	0.9	0.1	1.0	1.6	-0.6	34.91
		85	1.4	0.5	1.0	2.1	-0.2	32.13
		86	1.4	0.5	1.0	2.1	-0.1	33.11
		93	0.3	0.5	1.0	1.4	-0.6	48.89
		92	0.3	0.5	1.0	1.4	-0.7	47.72

	NODE	Mxx	Myy	Mxy	Mmax	Mmin	ANGLE
	Cent	0.8	0.2	0.9	1.5	-0.4	36.27
	85	1.4	0.5	1.0	2.0	-0.1	32.05
	86	1.2	0.9	0.9	2.0	0.1	41.24
	93	1.8	0.3	0.8	2.1	-0.1	24.36
	92	1.4	0.1	0.9	1.8	-0.3	26.41

	NODE	Vxx	Vyy
	Cent	3.8	0.5
	85	3.3	0.7
	86	3.3	1.3
	93	4.6	1.3
	92	4.6	0.7

LC		NODE	Fxx	Fyy	Fxy	Fmax	Fmin	ANGLE
RC ENV~1	Max	Cent	2.5	0.2	1.3	2.8	0.1	18.73
		85	3.6	0.7	1.3	3.9	0.4	16.18
		86	3.6	0.6	1.3	3.9	0.3	15.60
		93	1.5	0.6	1.3	2.1	0.3	31.64
		92	1.5	0.7	1.3	2.1	0.1	33.34
	Min	Cent	-1.9	-0.1	-0.8	0.1	-2.0	-77.44
		85	-3.3	-0.4	-0.8	-0.3	-3.3	-81.21
		86	-3.3	-0.7	-0.8	-0.6	-3.3	-80.37
		93	-0.7	-0.7	-0.8	-0.2	-1.1	-45.65
		92	-0.7	-0.4	-0.8	-0.1	-1.0	-53.82

		NODE	Mxx	Myy	Mxy	Mmax	Mmin	ANGLE
	Max	Cent	11.6	1.4	1.8	11.8	1.2	7.79
		85	9.7	1.9	1.9	9.9	1.7	9.41
		86	13.9	3.4	1.9	14.0	3.3	6.96
		93	11.5	-0.0	1.6	11.6	-0.3	5.82
		92	11.6	0.5	1.7	11.7	0.4	6.42
	Min	Cent	-3.2	0.2	0.0	0.2	-3.2	84.67
		85	-4.6	0.3	0.0	0.3	-4.7	89.96
		86	-2.0	0.3	-0.0	0.4	-2.1	78.15
		93	-1.6	-0.6	-0.1	-0.5	-1.7	76.41
		92	-4.3	0.0	-0.1	0.0	-4.3	88.56

		NODE	Vxx	Vyy
	Max	Cent	-1.0	4.6
		85	-3.5	3.2
		86	-3.5	6.0
		93	1.8	6.0
		92	1.8	3.2
	Min	Cent	-8.6	0.7
		85	-10.0	0.5
		86	-10.0	0.7
		93	-7.4	0.7
		92	-7.4	0.5

LC		NODE	Fxx	Fyy	Fxy	Fmax	Fmin	ANGLE
RC ENV~2	Max	Cent	1.3	0.1	0.6	1.3	0.1	-2.08
		85	1.7	0.4	0.6	1.7	0.1	-1.38
		86	1.7	0.2	0.6	1.7	0.2	-1.64

		93	0.9	0.2	0.6	0.9	0.2	24.75
		92	0.9	0.4	0.6	1.0	0.1	36.11
	Min	Cent	-0.3	0.0	-0.1	0.4	-0.6	53.44
		85	-0.8	-0.1	-0.1	0.4	-1.0	56.75
		86	-0.8	-0.3	-0.1	0.0	-1.1	60.50
		93	0.3	-0.3	-0.1	0.5	-0.6	19.51
		92	0.3	-0.1	-0.1	0.5	-0.1	23.44

	NODE	Mxx	Myy	Mxy	Mmax	Mmin	ANGLE
Max	Cent	7.7	1.0	1.1	7.8	0.8	8.85
	85	6.2	1.4	1.1	6.4	1.2	11.45
	86	9.5	2.5	1.1	9.6	2.3	7.79
	93	7.7	-0.2	1.0	7.8	-0.2	6.41
	92	7.5	0.4	1.0	7.6	0.3	7.42
Min	Cent	1.4	0.5	0.6	1.9	-0.0	31.70
	85	-0.5	0.7	0.6	1.2	-0.9	61.86
	86	3.5	1.4	0.7	3.8	1.2	21.07
	93	2.1	-0.4	0.6	2.3	-0.5	16.08
	92	0.4	0.2	0.5	1.0	-0.4	41.42

	NODE	Vxx	Vyy
Max	Cent	-2.6	3.3
	85	-4.3	2.3
	86	-4.3	4.4
	93	-0.2	4.4
	92	-0.2	2.3
Min	Cent	-5.3	2.0
	85	-7.6	1.2
	86	-7.6	2.5
	93	-3.7	2.5
	92	-3.7	1.2

ELEM	MAT	SEC	LC		NODE	Fxx	Fyy	Fxy	Fmax	Fmin	ANGLE
80	1	1	SX (RS)		Cent	1.0	0.1	0.3	1.0	0.1	15.76
					86	0.3	0.4	0.3	0.6	0.1	46.88
					37	0.3	0.1	0.3	0.5	-0.1	32.48
					27	1.8	0.1	0.3	1.8	0.1	8.48
					93	1.8	0.4	0.3	1.8	0.3	10.01

	NODE	Mxx	Myy	Mxy	Mmax	Mmin	ANGLE
	Cent	2.8	0.1	0.3	2.8	0.1	6.16
	86	6.0	1.3	0.5	6.1	1.3	6.02
	37	3.7	1.3	0.9	4.0	1.0	17.91
	27	4.4	0.5	0.9	4.6	0.3	11.78
	93	4.0	0.3	0.5	4.0	0.2	7.51

	NODE	Vxx	Vyy
	Cent	7.9	1.0
	86	16.3	2.2
	37	16.3	0.3
	27	0.8	0.3
	93	0.8	2.2

LC		NODE	Fxx	Fyy	Fxy	Fmax	Fmin	ANGLE
SY (RS)		Cent	1.0	0.6	0.7	1.5	0.1	38.13
		86	0.6	0.2	0.7	1.1	-0.3	37.51
		37	0.6	1.0	0.7	1.6	0.1	53.91
		27	1.4	1.0	0.7	1.9	0.5	38.77
		93	1.4	0.2	0.7	1.7	-0.1	25.50

	NODE	Mxx	Myy	Mxy	Mmax	Mmin	ANGLE
	Cent	1.5	0.5	0.6	1.8	0.3	24.41
	86	0.8	0.7	0.6	1.4	0.1	43.72
	37	2.8	1.4	0.4	2.9	1.3	16.29
	27	2.4	0.2	0.5	2.5	0.1	11.95
	93	0.8	0.1	0.7	1.2	-0.3	32.51

	NODE	Vxx	Vyy
	Cent	3.8	1.9

		86	5.0	1.3
		37	5.0	2.6
		27	3.0	2.6
		93	3.0	1.3

LC		NODE	Fxx	Fyy	Fxy	Fmax	Fmin	ANGLE
RC ENV~1	Max	Cent	1.7	0.5	0.9	2.1	-0.0	28.49
		86	1.0	0.4	0.9	1.6	0.3	33.27
		37	1.0	0.7	0.9	1.8	-0.0	40.71
		27	2.7	0.7	0.9	2.8	0.3	8.40
		93	2.7	0.4	0.9	2.8	0.3	10.43
	Min	Cent	-0.3	-0.8	-0.5	-0.2	-1.1	-47.77
		86	-0.2	-0.3	-0.5	0.1	-0.7	-9.06
		37	-0.2	-1.3	-0.5	0.0	-1.5	-20.83
		27	-0.8	-1.3	-0.5	-0.4	-1.6	-81.00
		93	-0.8	-0.3	-0.5	-0.3	-0.8	-82.03

		NODE	Mxx	Myy	Mxy	Mmax	Mmin	ANGLE
	Max	Cent	12.5	1.3	1.0	12.6	1.2	4.26
		86	14.0	3.5	1.4	14.1	3.4	5.92
		37	14.3	3.0	1.2	14.3	3.0	1.01
		27	10.1	0.0	1.0	10.1	-0.1	2.85
		93	13.4	0.2	1.2	13.4	0.1	3.90
	Min	Cent	1.5	0.1	-0.1	1.5	0.1	10.47
		86	-2.1	0.3	0.1	0.3	-2.1	84.47
		37	2.0	0.0	-0.5	2.2	0.0	-14.53
		27	-0.8	-0.9	-0.7	-0.2	-1.6	-42.75
		93	-0.4	-0.3	-0.1	-0.3	-0.4	69.22

		NODE	Vxx	Vyy
	Max	Cent	6.3	5.3
		86	13.1	6.0
		37	13.1	5.2
		27	6.9	5.2
		93	6.9	6.0
	Min	Cent	-9.6	0.8
		86	-19.4	0.7
		37	-19.4	0.0
		27	-3.2	0.0
		93	-3.2	0.7

LC		NODE	Fxx	Fyy	Fxy	Fmax	Fmin	ANGLE
RC ENV~2	Max	Cent	1.2	-0.1	0.3	1.3	-0.1	7.63
		86	0.8	0.2	0.3	0.9	0.2	19.60
		37	0.8	-0.3	0.3	0.8	-0.3	14.11
		27	1.8	-0.3	0.3	1.9	-0.3	4.73
		93	1.8	0.2	0.3	1.9	0.2	6.36
	Min	Cent	0.5	-0.2	0.1	0.6	-0.3	18.31
		86	0.4	-0.1	0.1	0.4	-0.2	14.39
		37	0.4	-0.5	0.1	0.4	-0.5	4.29
		27	0.5	-0.5	0.1	0.6	-0.5	17.08
		93	0.5	-0.1	0.1	0.6	-0.2	20.30

		NODE	Mxx	Myy	Mxy	Mmax	Mmin	ANGLE
	Max	Cent	8.7	0.9	0.7	8.7	0.9	4.47
		86	9.6	2.5	1.0	9.7	2.4	6.50
		37	10.1	2.2	0.7	10.1	2.2	1.27
		27	7.1	-0.4	0.5	7.1	-0.4	2.78
		93	9.1	0.1	0.9	9.2	0.0	4.14
	Min	Cent	4.0	0.6	0.4	4.1	0.6	7.59
		86	3.6	1.4	0.7	3.8	1.1	18.11
		37	5.5	1.2	0.0	5.6	1.2	5.56
		27	3.3	-0.7	-0.1	3.3	-0.7	-0.48
		93	3.3	-0.1	0.5	3.4	-0.1	9.08

		NODE	Vxx	Vyy
	Max	Cent	2.9	3.9
		86	3.0	4.4
		37	3.0	3.5
		27	4.4	3.5
		93	4.4	4.4

Min	Cent	-3.1	2.7	
	86	-8.0	2.5	
	37	-8.0	2.6	
	27	-0.4	2.6	
	93	-0.4	2.5	

ELEM	MAT	SEC	LC		NODE	Fxx	Fyy	Fxy	Fmax	Fmin	ANGLE
81	1	1	SX (RS)		Cent	2.2	0.0	0.7	2.4	-0.2	16.31
					94	1.1	0.6	0.7	1.6	0.1	35.77
					95	1.1	0.5	0.7	1.6	0.1	34.52
					102	3.5	0.5	0.7	3.6	0.4	12.83
					101	3.5	0.6	0.7	3.6	0.5	13.10

	NODE	Mxx	Myy	Mxy	Mmax	Mmin	ANGLE
	Cent	4.9	0.4	0.6	5.0	0.3	7.38
	94	4.0	0.3	0.5	4.0	0.2	7.57
	95	5.2	0.2	0.7	5.3	0.1	7.66
	102	4.6	0.3	0.6	4.7	0.2	7.67
	101	5.9	1.3	0.4	6.0	1.3	5.03

	NODE	Vxx	Vyy
	Cent	0.4	1.4
	94	2.5	2.2
	95	2.5	0.5
	102	2.1	0.5
	101	2.1	2.2

LC		NODE	Fxx	Fyy	Fxy	Fmax	Fmin	ANGLE
SY (RS)		Cent	0.8	0.1	1.0	1.6	-0.6	35.02
		94	0.3	0.5	1.0	1.4	-0.6	49.07
		95	0.3	0.5	1.0	1.4	-0.7	47.88
		102	1.4	0.5	1.0	2.1	-0.2	32.19
		101	1.4	0.5	1.0	2.1	-0.1	33.19

	NODE	Mxx	Myy	Mxy	Mmax	Mmin	ANGLE
	Cent	0.8	0.2	0.9	1.5	-0.4	36.27
	94	1.8	0.3	0.8	2.1	-0.1	24.36
	95	1.4	0.1	0.9	1.8	-0.3	26.40
	102	1.4	0.5	1.0	2.0	-0.1	32.04
	101	1.2	0.9	0.9	2.0	0.1	41.24

	NODE	Vxx	Vyy
	Cent	3.8	0.5
	94	4.6	1.3
	95	4.6	0.7
	102	3.3	0.7
	101	3.3	1.3

LC		NODE	Fxx	Fyy	Fxy	Fmax	Fmin	ANGLE
RC ENV~1	Max	Cent	2.5	0.2	1.3	2.8	0.1	19.35
		94	1.5	0.6	1.3	2.1	0.3	32.13
		95	1.5	0.7	1.3	2.1	0.1	34.14
		102	3.6	0.7	1.3	3.9	0.4	16.86
		101	3.6	0.6	1.3	3.9	0.3	16.15
	Min	Cent	-1.9	-0.0	-0.7	0.1	-2.0	-78.06
		94	-0.7	-0.7	-0.7	-0.2	-1.1	-45.16
		95	-0.7	-0.4	-0.7	-0.1	-1.0	-54.62
		102	-3.3	-0.4	-0.7	-0.3	-3.4	-81.74
		101	-3.3	-0.7	-0.7	-0.6	-3.4	-80.87

		NODE	Mxx	Myy	Mxy	Mmax	Mmin	ANGLE
	Max	Cent	5.3	1.3	1.5	5.6	1.0	14.11
		94	5.5	0.1	1.2	5.6	-0.1	9.18
		95	4.2	0.3	1.3	4.5	0.0	15.16
		102	3.1	1.6	1.6	3.7	0.7	26.42
		101	8.6	3.7	1.5	8.8	3.5	9.97
	Min	Cent	-4.5	0.3	-0.4	0.3	-4.5	-89.41
		94	-2.5	-0.5	-0.4	-0.5	-2.5	-87.17

95	-6.3	-0.0	-0.4	-0.0	-6.3	-87.68
102	-6.1	0.5	-0.3	0.6	-6.1	-84.39
101	-3.2	0.5	-0.4	0.5	-3.2	87.38

	NODE	Vxx	Vyy
Max	Cent	11.5	-1.2
	94	10.2	-1.2
	95	10.2	-1.0
	102	13.2	-1.0
	101	13.2	-1.2
Min	Cent	2.1	-4.5
	94	0.1	-6.5
	95	0.1	-2.6
	102	3.9	-2.6
	101	3.9	-6.5

LC		NODE	Fxx	Fyy	Fxy	Fmax	Fmin	ANGLE
RC ENV~2	Max	Cent	1.2	0.1	0.7	1.2	0.1	-1.18
		94	0.8	0.2	0.7	0.9	0.2	28.36
		95	0.8	0.5	0.7	1.1	0.1	48.24
		102	1.7	0.5	0.7	1.7	0.1	-0.76
		101	1.7	0.2	0.7	1.7	0.2	-0.90
	Min	Cent	-0.6	0.0	-0.1	0.4	-1.0	53.85
		94	0.2	-0.4	-0.1	0.5	-0.8	24.76
		95	0.2	-0.1	-0.1	0.5	-0.3	6.02
		102	-1.3	-0.1	-0.1	0.4	-1.5	48.67
		101	-1.3	-0.4	-0.1	-0.1	-1.7	64.54

	NODE	Mxx	Myy	Mxy	Mmax	Mmin	ANGLE
Max	Cent	2.2	0.9	0.6	2.4	0.7	22.40
	94	3.5	-0.1	0.5	3.5	-0.1	5.55
	95	0.5	0.2	0.5	0.9	-0.2	38.08
	102	-0.2	1.2	0.7	1.5	-0.5	67.04
	101	5.2	2.7	0.6	5.3	2.6	11.56
Min	Cent	-1.4	0.6	0.2	0.6	-1.4	79.84
	94	0.2	-0.3	0.1	0.3	-0.4	28.86
	95	-3.3	0.1	0.1	0.1	-3.3	88.32
	102	-3.4	0.9	0.3	1.0	-3.4	85.63
	101	0.6	1.4	0.3	1.6	0.4	65.41

	NODE	Vxx	Vyy
Max	Cent	8.4	-2.1
	94	7.4	-2.6
	95	7.4	-1.6
	102	9.7	-1.6
	101	9.7	-2.6
Min	Cent	5.8	-3.4
	94	4.7	-4.8
	95	4.7	-2.0
	102	6.5	-2.0
	101	6.5	-4.8

ELEM	MAT	SEC	LC		NODE	Fxx	Fyy	Fxy	Fmax	Fmin	ANGLE
82	1	1	SX (RS)		Cent	2.4	0.3	0.2	2.4	0.3	4.71
					95	2.3	0.5	0.2	2.3	0.5	5.54
					96	2.3	0.0	0.2	2.3	0.0	4.34
					103	2.4	0.0	0.2	2.4	0.0	4.08
					102	2.4	0.5	0.2	2.5	0.5	5.13

	NODE	Mxx	Myy	Mxy	Mmax	Mmin	ANGLE
	Cent	4.1	0.2	0.5	4.2	0.1	7.44
	95	4.4	0.0	0.5	4.5	-0.0	6.56
	96	4.0	0.2	0.4	4.0	0.1	6.05
	103	3.4	0.3	0.5	3.5	0.2	8.81
	102	4.6	0.3	0.6	4.7	0.2	7.78

	NODE	Vxx	Vyy
	Cent	1.5	0.5
	95	1.1	0.5
	96	1.1	0.5

	103	2.1	0.5	
	102	2.1	0.5	

LC		NODE	Fxx	Fyy	Fxy	Fmax	Fmin	ANGLE
SY (RS)		Cent	1.9	0.1	0.4	2.0	0.0	12.05
		95	2.4	0.3	0.4	2.5	0.2	9.91
		96	2.4	0.2	0.4	2.5	0.1	9.51
		103	1.4	0.2	0.4	1.5	0.0	16.62
		102	1.4	0.3	0.4	1.5	0.1	17.76

		NODE	Mxx	Myy	Mxy	Mmax	Mmin	ANGLE
		Cent	1.4	0.3	1.1	2.1	-0.4	31.50
		95	1.8	0.3	1.1	2.3	-0.3	27.49
		96	2.2	0.3	1.1	2.7	-0.2	24.36
		103	1.5	0.6	1.1	2.2	-0.2	33.08
		102	1.2	0.4	1.0	2.0	-0.3	34.36

		NODE	Vxx	Vyy
		Cent	2.2	0.8
		95	4.6	0.7
		96	4.6	0.8
		103	0.5	0.8
		102	0.5	0.7

LC		NODE	Fxx	Fyy	Fxy	Fmax	Fmin	ANGLE
RC ENV~1	Max	Cent	2.4	0.3	0.5	2.4	0.3	6.79
		95	2.3	0.7	0.5	2.4	0.6	13.05
		96	2.3	0.2	0.5	2.4	0.1	11.85
		103	2.6	0.2	0.5	2.7	0.0	5.38
		102	2.6	0.7	0.5	2.7	0.6	6.99
	Min	Cent	-2.3	-0.2	-0.3	-0.2	-2.3	-87.37
		95	-2.6	-0.4	-0.3	-0.4	-2.6	-87.26
		96	-2.6	-0.2	-0.3	-0.1	-2.6	-82.67
		103	-2.2	-0.2	-0.3	-0.1	-2.2	-73.72
		102	-2.2	-0.4	-0.3	-0.4	-2.2	-86.96

		NODE	Mxx	Myy	Mxy	Mmax	Mmin	ANGLE
	Max	Cent	1.0	0.7	1.6	1.9	-0.2	39.07
		95	2.4	0.2	1.5	2.7	-0.3	19.00
		96	-0.2	0.4	1.5	1.1	-0.8	64.31
		103	-1.2	1.1	1.6	1.7	-1.6	71.02
		102	3.1	1.6	1.6	3.7	0.7	26.07
	Min	Cent	-7.2	0.1	-0.6	0.2	-7.2	-82.63
		95	-6.4	-0.3	-0.6	-0.2	-6.4	-79.91
		96	-8.8	-0.2	-0.7	-0.1	-8.8	-89.88
		103	-8.6	0.0	-0.5	0.1	-8.6	-85.11
		102	-6.1	0.6	-0.5	0.6	-6.1	-82.10

		NODE	Vxx	Vyy
	Max	Cent	8.9	-0.6
		95	8.9	-1.0
		96	8.9	-0.2
		103	9.2	-0.2
		102	9.2	-1.0
	Min	Cent	2.5	-2.1
		95	-0.6	-2.6
		96	-0.6	-1.9
		103	3.3	-1.9
		102	3.3	-2.6

LC		NODE	Fxx	Fyy	Fxy	Fmax	Fmin	ANGLE
RC ENV~2	Max	Cent	1.0	0.2	0.2	1.0	0.0	-0.44
		95	0.7	0.4	0.2	0.7	0.0	-1.89
		96	0.7	0.0	0.2	0.7	-0.0	-2.21
		103	1.3	0.0	0.2	1.3	-0.0	-0.35
		102	1.3	0.4	0.2	1.3	0.1	-0.33
	Min	Cent	-0.9	-0.1	-0.0	0.1	-0.9	55.30
		95	-1.0	-0.1	-0.0	0.1	-1.0	56.36
		96	-1.0	-0.0	-0.0	0.0	-1.0	68.70

103	-0.8	-0.0	-0.0	0.0	-0.8	74.24
102	-0.8	-0.1	-0.0	0.2	-0.8	65.63

	NODE	Mxx	Myy	Mxy	Mmax	Mmin	ANGLE
Max	Cent	-2.1	0.5	0.5	0.6	-2.2	79.44
	95	-0.6	0.1	0.4	0.2	-0.8	63.06
	96	-3.5	0.1	0.4	0.1	-3.6	84.76
	103	-4.0	0.7	0.6	0.7	-4.0	83.49
	102	-0.2	1.2	0.6	1.4	-0.4	68.84
Min	Cent	-4.9	0.3	0.1	0.4	-4.9	87.81
	95	-3.7	-0.1	0.0	-0.0	-3.7	86.25
	96	-6.4	-0.0	0.0	-0.0	-6.4	89.66
	103	-6.3	0.4	0.2	0.4	-6.3	88.46
	102	-3.4	0.9	0.2	0.9	-3.4	86.62

	NODE	Vxx	Vyy
Max	Cent	6.5	-1.2
	95	6.4	-1.6
	96	6.4	-0.8
	103	6.8	-0.8
	102	6.8	-1.6
Min	Cent	4.4	-1.6
	95	3.8	-2.0
	96	3.8	-1.2
	103	4.8	-1.2
	102	4.8	-2.0

ELEM	MAT	SEC	LC	NODE	Fxx	Fyy	Fxy	Fmax	Fmin	ANGLE
83	1	1	SX (RS)	Cent	2.0	0.0	0.1	2.0	0.0	2.72
				96	2.2	0.1	0.1	2.2	0.1	2.53
				97	2.2	0.0	0.1	2.2	0.0	2.46
				104	1.8	0.0	0.1	1.8	0.0	3.04
				103	1.8	0.1	0.1	1.8	0.1	3.15

NODE	Mxx	Myy	Mxy	Mmax	Mmin	ANGLE
Cent	3.0	0.1	0.3	3.0	0.1	5.97
96	3.4	0.0	0.3	3.4	0.0	5.01
97	2.6	0.1	0.2	2.6	0.1	5.48
104	2.4	0.1	0.3	2.4	0.1	6.99
103	3.5	0.3	0.3	3.5	0.3	5.90

NODE	Vxx	Vyy
Cent	1.7	0.3
96	1.6	0.5
97	1.6	0.2
104	2.0	0.2
103	2.0	0.5

LC	NODE	Fxx	Fyy	Fxy	Fmax	Fmin	ANGLE
SY (RS)	Cent	2.4	0.2	0.2	2.4	0.2	5.06
	96	3.0	0.2	0.2	3.0	0.2	4.10
	97	3.0	0.1	0.2	3.0	0.1	3.93
	104	1.9	0.1	0.2	1.9	0.1	6.45
	103	1.9	0.2	0.2	1.9	0.2	6.92

NODE	Mxx	Myy	Mxy	Mmax	Mmin	ANGLE
Cent	1.6	0.3	1.2	2.3	-0.4	30.82
96	2.2	0.3	1.1	2.7	-0.2	24.81
97	2.1	0.2	1.2	2.7	-0.3	25.59
104	1.5	0.6	1.1	2.3	-0.2	33.73
103	1.5	0.5	1.1	2.2	-0.2	33.71

NODE	Vxx	Vyy
Cent	2.0	0.9
96	4.4	0.8
97	4.4	0.9
104	0.4	0.9
103	0.4	0.8

LC		NODE	Fxx	Fyy	Fxy	Fmax	Fmin	ANGLE
RC ENV~1	Max	Cent	2.4	0.2	0.2	2.4	0.2	6.04
		96	2.8	0.2	0.2	2.8	0.2	5.09
		97	2.8	0.1	0.2	2.8	0.1	4.95
		104	1.9	0.1	0.2	2.0	0.1	7.24
		103	1.9	0.2	0.2	2.0	0.2	7.55
	Min	Cent	-2.5	-0.2	-0.2	-0.2	-2.5	-85.86
		96	-3.3	-0.3	-0.2	-0.3	-3.3	-86.76
		97	-3.3	-0.1	-0.2	-0.1	-3.3	-86.93
		104	-1.8	-0.1	-0.2	-0.1	-1.8	-84.39
		103	-1.8	-0.3	-0.2	-0.2	-1.8	-83.79

		NODE	Mxx	Myy	Mxy	Mmax	Mmin	ANGLE
	Max	Cent	-2.5	0.6	1.6	1.1	-2.6	71.68
		96	-1.7	0.2	1.5	0.9	-1.9	67.42
		97	-3.2	0.3	1.5	0.9	-3.3	71.26
		104	-3.9	0.9	1.6	1.3	-4.0	75.31
		103	-1.1	1.1	1.6	1.6	-1.4	71.57
	Min	Cent	-9.7	-0.1	-0.7	-0.0	-9.7	-83.98
		96	-9.0	-0.4	-0.7	-0.3	-9.0	-84.08
		97	-10.5	-0.1	-0.8	-0.0	-10.5	-84.12
		104	-10.6	-0.3	-0.7	-0.2	-10.6	-84.70
		103	-8.8	0.0	-0.6	0.1	-8.8	-84.22

		NODE	Vxx	Vyy
	Max	Cent	4.4	0.1
		96	5.7	-0.2
		97	5.7	0.4
		104	4.9	0.4
		103	4.9	-0.2
	Min	Cent	0.0	-1.7
		96	-3.1	-1.9
		97	-3.1	-1.5
		104	0.8	-1.5
		103	0.8	-1.9

LC		NODE	Fxx	Fyy	Fxy	Fmax	Fmin	ANGLE
RC ENV~2	Max	Cent	0.7	0.0	0.0	0.7	-0.0	3.46
		96	0.6	0.0	0.0	0.6	-0.0	2.99
		97	0.6	0.0	0.0	0.6	0.0	3.45
		104	0.8	0.0	0.0	0.8	0.0	3.10
		103	0.8	0.0	0.0	0.8	-0.0	2.75
	Min	Cent	-0.9	-0.0	0.0	0.0	-0.9	83.18
		96	-1.1	-0.1	0.0	-0.0	-1.1	80.48
		97	-1.1	0.0	0.0	0.0	-1.1	88.82
		104	-0.7	0.0	0.0	0.0	-0.7	88.21
		103	-0.7	-0.1	0.0	-0.0	-0.7	82.55

		NODE	Mxx	Myy	Mxy	Mmax	Mmin	ANGLE
	Max	Cent	-5.0	0.3	0.4	0.3	-5.0	86.20
		96	-4.3	-0.0	0.4	-0.0	-4.3	87.39
		97	-5.6	0.1	0.4	0.1	-5.7	86.39
		104	-6.1	0.3	0.4	0.3	-6.1	86.08
		103	-4.0	0.7	0.5	0.7	-4.0	84.99
	Min	Cent	-7.2	0.1	0.1	0.1	-7.2	88.95
		96	-6.6	-0.1	0.1	-0.1	-6.7	88.42
		97	-7.7	0.0	0.1	0.0	-7.7	89.39
		104	-7.8	0.2	0.1	0.2	-7.8	88.58
		103	-6.5	0.4	0.2	0.4	-6.5	88.61

		NODE	Vxx	Vyy
	Max	Cent	3.2	-0.5
		96	2.9	-0.8
		97	2.9	-0.3
		104	3.6	-0.3
		103	3.6	-0.8
	Min	Cent	1.6	-0.8
		96	1.1	-1.2
		97	1.1	-0.5
		104	2.1	-0.5
		103	2.1	-1.2

ELEM	MAT	SEC	LC		NODE	Fxx	Fyy	Fxy	Fmax	Fmin	ANGLE
84	1	1	SX	(RS)	Cent	1.5	0.0	0.1	1.5	0.0	5.69
					97	1.7	0.1	0.1	1.7	0.1	5.20
					98	1.7	0.1	0.1	1.7	0.1	5.18
					105	1.3	0.1	0.1	1.3	0.1	6.94
					104	1.3	0.1	0.1	1.3	0.1	6.98

		NODE	Mxx	Myy	Mxy	Mmax	Mmin	ANGLE
		Cent	1.8	0.1	0.2	1.8	0.0	5.96
		97	2.3	0.0	0.2	2.3	0.0	4.20
		98	1.3	0.1	0.1	1.3	0.0	6.58
		105	1.2	0.1	0.2	1.2	0.1	9.62
		104	2.4	0.1	0.2	2.4	0.1	5.23

	NODE	Vxx	Vyy
	Cent	2.0	0.2
	97	1.9	0.2
	98	1.9	0.2
	105	2.1	0.2
	104	2.1	0.2

LC		NODE	Fxx	Fyy	Fxy	Fmax	Fmin	ANGLE
SY	(RS)	Cent	2.7	0.2	0.2	2.8	0.2	4.13
		97	3.3	0.1	0.2	3.3	0.1	3.35
		98	3.3	0.2	0.2	3.3	0.2	3.46
		105	2.2	0.2	0.2	2.3	0.2	5.24
		104	2.2	0.1	0.2	2.3	0.1	5.01

	NODE	Mxx	Myy	Mxy	Mmax	Mmin	ANGLE
	Cent	1.5	0.3	1.3	2.4	-0.5	33.06
	97	2.4	0.3	1.3	3.0	-0.3	25.11
	98	2.0	0.2	1.3	2.7	-0.5	27.99
	105	1.3	0.5	1.3	2.2	-0.5	36.67
	104	1.5	0.6	1.2	2.4	-0.3	34.49

	NODE	Vxx	Vyy
	Cent	2.7	0.8
	97	5.3	0.9
	98	5.3	0.7
	105	0.4	0.7
	104	0.4	0.9

LC		NODE	Fxx	Fyy	Fxy	Fmax	Fmin	ANGLE
RC ENV~1	Max	Cent	2.6	0.2	0.2	2.6	0.2	4.41
		97	3.0	0.2	0.2	3.1	0.1	3.72
		98	3.0	0.2	0.2	3.1	0.2	3.82
		105	2.3	0.2	0.2	2.3	0.2	5.28
		104	2.3	0.2	0.2	2.3	0.1	5.09
	Min	Cent	-2.9	-0.2	-0.2	-0.2	-2.9	-86.13
		97	-3.6	-0.1	-0.2	-0.1	-3.6	-86.96
		98	-3.6	-0.2	-0.2	-0.2	-3.6	-86.85
		105	-2.2	-0.2	-0.2	-0.2	-2.2	-84.79
		104	-2.2	-0.1	-0.2	-0.1	-2.2	-85.08

		NODE	Mxx	Myy	Mxy	Mmax	Mmin	ANGLE
	Max	Cent	-4.1	0.6	1.7	1.1	-4.2	73.20
		97	-4.1	0.3	1.6	0.8	-4.3	71.82
		98	-3.3	0.4	1.6	1.0	-3.9	69.26
		105	-4.5	1.0	1.6	1.4	-4.6	74.90
		104	-3.8	0.9	1.6	1.3	-3.9	75.16
	Min	Cent	-9.8	-0.1	-1.0	0.0	-9.8	-82.39
		97	-10.6	-0.4	-0.9	-0.3	-10.6	-83.98
		98	-8.9	-0.1	-1.0	0.0	-8.9	-81.98
		105	-9.1	0.0	-1.0	0.2	-9.1	-82.00
		104	-10.6	-0.2	-0.9	-0.1	-10.6	-83.36

	NODE	Vxx	Vyy

Max	Cent	1.3	0.1
	97	3.3	0.4
	98	3.3	-0.1
	105	1.4	-0.1
	104	1.4	0.4
Min	Cent	-4.1	-1.5
	97	-7.4	-1.5
	98	-7.4	-1.6
	105	-2.8	-1.6
	104	-2.8	-1.5

LC		NODE	Fxx	Fyy	Fxy	Fmax	Fmin	ANGLE
RC ENV~2	Max	Cent	0.5	0.0	0.0	0.5	0.0	2.71
		97	0.4	0.1	0.0	0.4	0.0	3.23
		98	0.4	0.0	0.0	0.4	0.0	3.57
		105	0.6	0.0	0.0	0.6	0.0	2.35
		104	0.6	0.1	0.0	0.6	0.0	2.23
	Min	Cent	-0.7	0.0	-0.0	0.0	-0.7	-89.51
		97	-0.9	-0.0	-0.0	0.0	-0.9	87.19
		98	-0.9	-0.0	-0.0	-0.0	-0.9	-88.76
		105	-0.5	-0.0	-0.0	-0.0	-0.5	-87.73
		104	-0.5	-0.0	-0.0	0.0	-0.5	-86.40

		NODE	Mxx	Myy	Mxy	Mmax	Mmin	ANGLE
	Max	Cent	-5.8	0.3	0.3	0.3	-5.9	88.49
		97	-6.2	0.0	0.3	0.0	-6.2	88.93
		98	-5.3	0.1	0.3	0.1	-5.3	87.05
		105	-5.7	0.6	0.3	0.6	-5.7	88.84
		104	-6.0	0.3	0.4	0.3	-6.0	87.01
	Min	Cent	-7.3	0.1	0.1	0.1	-7.3	88.99
		97	-7.9	-0.0	0.1	-0.0	-7.9	87.11
		98	-6.6	0.1	0.0	0.1	-6.6	89.07
		105	-6.8	0.4	0.0	0.4	-6.8	89.13
		104	-7.8	0.2	0.1	0.2	-7.8	88.91

		NODE	Vxx	Vyy
	Max	Cent	-0.7	-0.5
		97	-1.1	-0.3
		98	-1.1	-0.6
		105	-0.3	-0.6
		104	-0.3	-0.3
	Min	Cent	-2.1	-0.7
		97	-2.4	-0.5
		98	-2.4	-1.0
		105	-1.8	-1.0
		104	-1.8	-0.5

ELEM	MAT	SEC	LC		NODE	Fxx	Fyy	Fxy	Fmax	Fmin	ANGLE
85	1	1	SX (RS)		Cent	0.9	0.1	0.1	1.0	0.1	9.41
					98	1.2	0.0	0.1	1.2	0.0	6.73
					99	1.2	0.3	0.1	1.2	0.3	8.47
					106	0.7	0.3	0.1	0.7	0.3	16.74
					105	0.7	0.0	0.1	0.7	0.0	11.27

		NODE	Mxx	Myy	Mxy	Mmax	Mmin	ANGLE
		Cent	0.5	0.1	0.2	0.6	0.0	22.92
		98	1.0	0.1	0.1	1.0	0.0	8.82
		99	0.2	0.0	0.2	0.3	-0.1	35.77
		106	0.3	0.2	0.3	0.5	-0.0	41.68
		105	1.2	0.1	0.2	1.3	0.1	11.33

		NODE	Vxx	Vyy
		Cent	2.1	0.3
		98	1.8	0.2
		99	1.8	0.3
		106	2.3	0.3
		105	2.3	0.2

LC	NODE	Fxx	Fyy	Fxy	Fmax	Fmin	ANGLE

```
-------- ---- ------ ---------- ---------- ---------- ---------- ---------- ----------
      SY (RS)   Cent        3.0        0.2        0.4        3.0        0.1       7.87
                  98        3.4        0.2        0.4        3.5        0.1       6.77
                  99        3.4        0.4        0.4        3.5        0.4       7.29
                 106        2.6        0.4        0.4        2.7        0.4       9.92
                 105        2.6        0.2        0.4        2.6        0.1       9.00

                NODE        Mxx        Myy        Mxy       Mmax       Mmin      ANGLE
           ---- ------ ---------- ---------- ---------- ---------- ---------- ----------
                Cent        1.3        0.2        1.4        2.3       -0.8      34.41
                  98        2.1        0.3        1.4        2.9       -0.4      28.75
                  99        2.8        0.5        1.3        3.4       -0.1      23.97
                 106        1.1        0.3        1.3        2.1       -0.7      35.78
                 105        1.4        0.5        1.4        2.4       -0.6      36.12

                NODE        Vxx        Vyy
           ---- ------ ---------- ----------
                Cent        4.0        0.6
                  98        7.2        0.7
                  99        7.2        0.5
                 106        0.8        0.5
                 105        0.8        0.7


      LC        NODE        Fxx        Fyy        Fxy       Fmax       Fmin      ANGLE
-------- ---- ------ ---------- ---------- ---------- ---------- ---------- ----------
RC ENV~1  Max   Cent        2.9        0.3        0.3        2.9        0.2       7.20
                  98        3.2        0.2        0.3        3.3        0.1       6.25
                  99        3.2        0.5        0.3        3.3        0.5       7.06
                 106        2.6        0.5        0.3        2.7        0.5       9.01
                 105        2.6        0.2        0.3        2.7        0.1       7.73
           Min   Cent       -3.0       -0.1       -0.4       -0.1       -3.1     -81.53
                  98       -3.6       -0.2       -0.4       -0.1       -3.7     -82.77
                  99       -3.6       -0.3       -0.4       -0.2       -3.7     -82.52
                 106       -2.5       -0.3       -0.4       -0.2       -2.6     -79.25
                 105       -2.5       -0.2       -0.4       -0.1       -2.6     -79.73

                NODE        Mxx        Myy        Mxy       Mmax       Mmin      ANGLE
           ---- ------ ---------- ---------- ---------- ---------- ---------- ----------
           Max   Cent       -3.0        0.8        1.4        1.2       -3.5      71.19
                  98       -3.5        0.4        1.5        0.9       -4.0      70.82
                  99        0.1        0.7        1.3        1.7       -0.9      52.08
                 106       -2.0        1.8        1.2        1.9       -2.4      72.42
                 105       -4.5        1.0        1.5        1.4       -4.6      75.43
           Min   Cent       -6.6        0.3       -1.4        0.4       -6.6     -88.01
                  98       -8.6       -0.3       -1.2       -0.1       -8.6     -80.75
                  99       -5.5       -0.2       -1.4        0.1       -5.9     -76.61
                 106       -4.7        1.0       -1.4        1.1       -4.7     -85.52
                 105       -9.3        0.0       -1.3        0.3       -9.3     -80.20

                NODE        Vxx        Vyy
           ---- ------ ---------- ----------
           Max   Cent       -0.8       -0.8
                  98        2.2       -0.1
                  99        2.2       -1.5
                 106       -2.2       -1.5
                 105       -2.2       -0.1
           Min   Cent       -8.8       -2.0
                  98      -12.2       -1.6
                  99      -12.2       -2.8
                 106       -8.6       -2.8
                 105       -8.6       -1.6


      LC        NODE        Fxx        Fyy        Fxy       Fmax       Fmin      ANGLE
-------- ---- ------ ---------- ---------- ---------- ---------- ---------- ----------
RC ENV~2  Max   Cent        0.3        0.1       -0.0        0.3        0.1     -20.33
                  98        0.3        0.0       -0.0        0.3       -0.0     -12.25
                  99        0.3        0.3       -0.0        0.3        0.2     -47.32
                 106        0.4        0.3       -0.0        0.4        0.2     -25.92
                 105        0.4        0.0       -0.0        0.4       -0.0     -11.27
           Min   Cent       -0.4        0.0       -0.1        0.0       -0.5     -84.51
                  98       -0.7       -0.0       -0.1        0.0       -0.7     -80.09
                  99       -0.7        0.0       -0.1        0.0       -0.7     -86.06
                 106       -0.3        0.0       -0.1        0.0       -0.3     -81.69
                 105       -0.3       -0.0       -0.1        0.0       -0.3     -81.02

                NODE        Mxx        Myy        Mxy       Mmax       Mmin      ANGLE
           ---- ------ ---------- ---------- ---------- ---------- ---------- ----------
```

Max	Cent	-4.3	0.6	0.0	0.6	-4.3	-88.17
	98	-5.6	0.1	0.2	0.1	-5.6	-89.18
	99	-2.7	0.3	-0.0	0.3	-2.7	-85.36
	106	-3.1	1.4	-0.1	1.4	-3.1	-85.32
	105	-5.8	0.6	0.1	0.6	-5.8	-89.38
Min	Cent	-5.0	0.5	-0.3	0.5	-5.0	-89.24
	98	-6.5	0.1	-0.1	0.1	-6.5	89.61
	99	-3.4	0.2	-0.3	0.2	-3.4	-88.11
	106	-3.5	1.2	-0.4	1.2	-3.6	-88.48
	105	-7.0	0.3	-0.2	0.3	-7.0	-89.74

	NODE	Vxx	Vyy
Max	Cent	-4.4	-1.3
	98	-4.5	-0.6
	99	-4.5	-1.9
	106	-4.3	-1.9
	105	-4.3	-0.6
Min	Cent	-6.2	-1.6
	98	-6.1	-1.0
	99	-6.1	-2.1
	106	-6.3	-2.1
	105	-6.3	-1.0

ELEM	MAT	SEC	LC	NODE	Fxx	Fyy	Fxy	Fmax	Fmin	ANGLE
86	1	1	SX (RS)	Cent	0.5	0.0	0.3	0.7	-0.1	25.22
				99	1.1	0.2	0.3	1.2	0.1	16.40
				100	1.1	0.3	0.3	1.2	0.2	17.80
				107	0.8	0.3	0.3	0.9	0.2	26.78
				106	0.8	0.2	0.3	0.9	0.1	24.10

	NODE	Mxx	Myy	Mxy	Mmax	Mmin	ANGLE
	Cent	0.8	0.3	0.2	0.9	0.2	22.32
	99	0.5	0.1	0.3	0.7	-0.1	26.92
	100	0.6	0.2	0.2	0.7	0.1	19.61
	107	1.8	1.0	0.1	1.8	0.9	9.67
	106	0.3	0.2	0.3	0.5	-0.0	41.95

	NODE	Vxx	Vyy
	Cent	1.4	1.0
	99	0.4	0.3
	100	0.4	1.6
	107	2.6	1.6
	106	2.6	0.3

LC	NODE	Fxx	Fyy	Fxy	Fmax	Fmin	ANGLE
SY (RS)	Cent	3.4	0.1	1.2	3.8	-0.3	17.96
	99	4.4	0.6	1.2	4.7	0.3	16.24
	100	4.4	0.6	1.2	4.7	0.3	16.13
	107	2.6	0.6	1.2	3.2	0.1	24.77
	106	2.6	0.6	1.2	3.2	0.1	25.01

	NODE	Mxx	Myy	Mxy	Mmax	Mmin	ANGLE
	Cent	2.6	0.7	0.8	2.9	0.4	20.49
	99	1.1	0.1	0.8	1.5	-0.4	28.08
	100	4.6	0.5	0.7	4.7	0.4	9.37
	107	4.6	2.3	0.9	4.9	2.0	19.97
	106	1.3	0.3	1.0	2.0	-0.3	32.01

	NODE	Vxx	Vyy
	Cent	7.0	1.5
	99	7.1	0.5
	100	7.1	3.3
	107	6.8	3.3
	106	6.8	0.5

LC		NODE	Fxx	Fyy	Fxy	Fmax	Fmin	ANGLE
RC ENV~1	Max	Cent	3.5	0.2	1.0	3.8	0.1	14.87
		99	4.7	0.8	1.0	4.9	0.6	13.14

		100	4.7	0.5	1.0	4.9	0.3	12.36
		107	2.5	0.5	1.0	2.9	0.2	21.71
		106	2.5	0.8	1.0	3.0	0.4	23.86
	Min	Cent	-3.3	-0.1	-1.4	0.2	-3.8	-62.25
		99	-4.1	-0.5	-1.4	0.0	-4.5	-70.83
		100	-4.1	-0.7	-1.4	-0.2	-4.6	-69.97
		107	-2.7	-0.7	-1.4	-0.1	-3.4	-56.32
		106	-2.7	-0.5	-1.4	0.2	-3.4	-63.26

		NODE	Mxx	Myy	Mxy	Mmax	Mmin	ANGLE
	Max	Cent	2.0	1.7	0.2	2.5	1.6	-57.78
		99	-1.0	0.7	0.4	1.0	-1.1	-73.03
		100	5.7	0.4	0.1	5.7	0.4	1.03
		107	6.5	4.7	0.1	6.5	4.7	4.16
		106	-2.0	1.8	0.5	2.0	-2.1	-78.83
	Min	Cent	-3.2	0.3	-1.5	0.8	-3.7	-69.85
		99	-3.2	0.3	-1.2	0.4	-3.5	-77.63
		100	-3.5	-0.6	-1.4	-0.1	-4.0	-69.03
		107	-2.6	0.1	-1.7	0.9	-3.5	-63.82
		106	-5.2	0.9	-1.6	1.2	-5.4	-79.91

		NODE	Vxx	Vyy
	Max	Cent	-0.5	-1.6
		99	1.2	-1.5
		100	1.2	-0.9
		107	-2.2	-0.9
		106	-2.2	-1.5
	Min	Cent	-14.4	-4.9
		99	-13.1	-2.8
		100	-13.1	-7.5
		107	-16.4	-7.5
		106	-16.4	-2.8

LC		NODE	Fxx	Fyy	Fxy	Fmax	Fmin	ANGLE
RC ENV~2	Max	Cent	0.4	0.1	-0.2	0.7	-0.1	-35.00
		99	0.9	0.3	-0.2	1.1	0.1	-28.81
		100	0.9	0.0	-0.2	1.0	-0.2	-19.81
		107	-0.1	0.0	-0.2	0.3	-0.2	-42.32
		106	-0.1	0.3	-0.2	0.6	-0.2	-57.82
	Min	Cent	-0.1	0.0	-0.4	0.2	-0.3	-58.83
		99	-0.1	0.1	-0.4	0.2	-0.2	-63.06
		100	-0.1	-0.2	-0.4	0.1	-0.3	-55.69
		107	-0.1	-0.2	-0.4	0.1	-0.6	-53.83
		106	-0.1	0.1	-0.4	0.2	-0.4	-61.65

		NODE	Mxx	Myy	Mxy	Mmax	Mmin	ANGLE
	Max	Cent	0.1	1.2	-0.6	1.8	-0.5	-59.27
		99	-1.7	0.5	-0.4	0.7	-1.9	-74.26
		100	2.1	-0.1	-0.6	2.4	-0.3	-19.85
		107	3.5	3.0	-0.8	4.5	2.1	-39.24
		106	-3.3	1.3	-0.6	1.5	-3.4	-79.40
	Min	Cent	-0.9	0.9	-1.1	1.2	-1.2	-70.97
		99	-2.4	0.4	-0.7	0.4	-2.4	-82.13
		100	0.9	-0.2	-1.0	1.3	-0.6	-27.58
		107	1.5	2.2	-1.2	2.8	0.9	-55.10
		106	-3.9	1.2	-1.0	1.3	-4.0	-82.53

		NODE	Vxx	Vyy
	Max	Cent	-7.4	-2.9
		99	-5.7	-1.9
		100	-5.7	-3.9
		107	-8.9	-3.9
		106	-8.9	-1.9
	Min	Cent	-9.6	-3.7
		99	-7.3	-2.1
		100	-7.3	-5.3
		107	-12.1	-5.3
		106	-12.1	-2.1

ELEM	MAT	SEC	LC		NODE	Fxx	Fyy	Fxy	Fmax	Fmin	ANGLE
87	1	1	SX (RS)		Cent	0.4	0.1	0.2	0.5	0.0	22.44

100	0.2	0.3	0.2	0.4	0.1	51.31
29	0.2	0.1	0.2	0.3	-0.0	35.37
108	0.9	0.1	0.2	0.9	0.1	11.54
107	0.9	0.3	0.2	0.9	0.2	14.71

NODE	Mxx	Myy	Mxy	Mmax	Mmin	ANGLE
Cent	0.1	0.1	0.2	0.3	-0.1	43.96
100	0.4	0.2	0.4	0.8	-0.1	39.73
29	1.7	0.3	0.4	1.8	0.2	14.21
108	3.7	0.7	0.4	3.8	0.7	8.02
107	2.1	1.0	0.4	2.2	0.9	18.28

NODE	Vxx	Vyy
Cent	3.8	0.8
100	2.1	1.6
29	2.1	0.0
108	9.8	0.0
107	9.8	1.6

LC		NODE	Fxx	Fyy	Fxy	Fmax	Fmin	ANGLE
SY (RS)		Cent	4.7	0.8	0.8	4.8	0.6	10.74
		100	5.7	0.2	0.8	5.8	0.1	7.92
		29	5.7	1.3	0.8	5.8	1.2	9.77
		108	3.7	1.3	0.8	4.0	1.1	16.42
		107	3.7	0.2	0.8	3.9	0.1	11.95

NODE	Mxx	Myy	Mxy	Mmax	Mmin	ANGLE
Cent	5.4	1.4	0.3	5.4	1.3	3.67
100	5.0	0.6	0.2	5.0	0.6	2.14
29	6.1	0.4	0.2	6.1	0.4	2.13
108	8.2	3.4	0.4	8.3	3.3	4.55
107	2.5	1.9	0.2	2.5	1.8	13.23

NODE	Vxx	Vyy
Cent	6.3	4.6
100	2.4	3.3
29	2.4	6.0
108	10.2	6.0
107	10.2	3.3

LC		NODE	Fxx	Fyy	Fxy	Fmax	Fmin	ANGLE
RC ENV~1	Max	Cent	5.2	0.6	0.6	5.3	0.6	7.55
		100	6.4	0.3	0.6	6.4	0.3	5.68
		29	6.4	1.1	0.6	6.4	1.0	6.57
		108	4.1	1.1	0.6	4.2	1.0	11.21
		107	4.1	0.3	0.6	4.2	0.3	8.89
	Min	Cent	-4.2	-0.9	-0.9	-0.6	-4.4	-75.27
		100	-5.0	-0.3	-0.9	-0.1	-5.2	-79.34
		29	-5.0	-1.6	-0.9	-1.3	-5.2	-75.79
		108	-3.4	-1.6	-0.9	-1.2	-3.8	-67.11
		107	-3.4	-0.3	-0.9	-0.1	-3.6	-55.35

NODE	Mxx	Myy	Mxy	Mmax	Mmin	ANGLE
Max Cent	8.9	2.5	-0.4	8.9	2.4	-3.45
100	7.2	0.7	-0.1	7.2	0.7	-3.66
29	9.6	-0.2	0.1	9.6	-0.2	-0.39
108	14.0	5.7	-0.2	14.0	5.6	-1.75
107	5.6	4.3	-0.6	6.8	3.8	-34.14
Min Cent	-1.9	-0.3	-1.4	0.1	-2.3	-66.30
100	-2.7	-0.4	-1.3	-0.2	-2.9	-73.40
29	-2.7	-1.1	-0.8	-0.8	-2.8	-75.30
108	-2.5	-1.1	-1.4	-0.5	-3.0	-62.00
107	-0.1	0.6	-1.9	1.4	-0.9	-53.55

NODE	Vxx	Vyy
Max Cent	2.1	0.4
100	-0.0	-0.9
29	-0.0	1.7
108	4.1	1.7

		107	4.1	-0.9
	Min	Cent	-10.6	-8.9
		100	-4.8	-7.5
		29	-4.8	-10.2
		108	-16.3	-10.2
		107	-16.3	-7.5

LC		NODE	Fxx	Fyy	Fxy	Fmax	Fmin	ANGLE
RC ENV~2	Max	Cent	1.0	-0.1	-0.1	1.1	-0.1	-11.22
		100	1.2	0.1	-0.1	1.3	0.0	-10.83
		29	1.2	-0.2	-0.1	1.3	-0.2	-8.83
		108	0.8	-0.2	-0.1	0.9	-0.2	-11.63
		107	0.8	0.1	-0.1	0.9	-0.1	-15.22
	Min	Cent	0.3	-0.2	-0.3	0.4	-0.3	-20.53
		100	0.6	-0.1	-0.3	0.7	-0.1	-14.99
		29	0.6	-0.4	-0.3	0.6	-0.5	-10.60
		108	-0.0	-0.4	-0.3	0.1	-0.5	-26.46
		107	-0.0	-0.1	-0.3	0.2	-0.1	-52.88

		NODE	Mxx	Myy	Mxy	Mmax	Mmin	ANGLE
	Max	Cent	5.2	1.3	-0.6	5.4	1.1	-13.07
		100	3.8	0.2	-0.6	3.9	-0.0	-11.83
		29	5.3	-0.5	-0.2	5.3	-0.5	-4.95
		108	8.9	2.8	-0.6	9.0	2.7	-7.81
		107	4.1	3.1	-0.9	5.0	2.2	-35.14
	Min	Cent	3.5	1.1	-1.0	3.6	0.8	-14.31
		100	2.2	0.1	-0.9	2.4	-0.1	-15.12
		29	3.1	-0.8	-0.6	3.2	-0.8	-3.67
		108	4.9	2.1	-1.0	5.2	1.8	-16.48
		107	2.0	2.3	-1.4	3.3	0.9	-46.98

		NODE	Vxx	Vyy
	Max	Cent	-3.0	-4.1
		100	-1.9	-3.9
		29	-1.9	-4.3
		108	-3.4	-4.3
		107	-3.4	-3.9
	Min	Cent	-6.3	-5.2
		100	-3.1	-5.3
		29	-3.1	-5.1
		108	-10.3	-5.1
		107	-10.3	-5.3

ELEM	MAT	SEC	LC		NODE	Fxx	Fyy	Fxy	Fmax	Fmin	ANGLE
88	1	1	SX (RS)		Cent	6.1	0.1	2.8	7.2	-1.0	21.34
					44	0.3	1.2	2.8	3.6	-2.1	49.55
					101	0.3	1.1	2.8	3.5	-2.1	48.93
					109	12.2	1.1	2.8	12.8	0.4	13.33
					5	12.2	1.2	2.8	12.8	0.5	13.46

		NODE	Mxx	Myy	Mxy	Mmax	Mmin	ANGLE
		Cent	9.2	1.3	1.4	9.4	1.0	9.92
		44	3.6	1.0	5.2	7.7	-3.0	37.86
		101	5.7	0.6	1.4	6.0	0.2	14.01
		109	6.8	2.4	1.5	7.3	1.9	17.55
		5	27.8	4.3	5.0	28.8	3.3	11.54

		NODE	Vxx	Vyy
		Cent	10.4	1.7
		44	16.3	1.8
		101	16.3	5.0
		109	37.0	5.0
		5	37.0	1.8

LC		NODE	Fxx	Fyy	Fxy	Fmax	Fmin	ANGLE
SY (RS)		Cent	0.8	2.7	3.0	4.9	-1.4	54.04
		44	0.2	7.2	3.0	8.3	-0.9	69.95
		101	0.2	1.8	3.0	4.1	-2.1	52.76
		109	1.7	1.8	3.0	4.7	-1.2	45.78

		5	1.7	7.2	3.0	8.5	0.4	66.57

	NODE	Mxx	Myy	Mxy	Mmax	Mmin	ANGLE
	Cent	1.9	4.0	1.8	5.1	0.8	60.04
	44	2.8	1.4	0.8	3.1	1.0	23.30
	101	0.8	1.1	0.5	1.5	0.4	53.60
	109	1.3	5.0	4.5	8.0	-1.7	56.27
	5	5.6	18.6	4.4	20.0	4.3	73.15

	NODE	Vxx	Vyy
	Cent	4.1	9.9
	44	5.0	30.4
	101	5.0	10.6
	109	3.5	10.6
	5	3.5	30.4

LC		NODE	Fxx	Fyy	Fxy	Fmax	Fmin	ANGLE
RC ENV~1	Max	Cent	6.7	1.9	3.7	8.1	-0.9	21.66
		44	0.7	4.8	3.7	6.9	-1.6	59.97
		101	0.7	2.6	3.7	5.4	0.5	53.12
		109	13.1	2.6	3.7	14.1	1.2	16.09
		5	13.1	4.8	3.7	13.9	-0.2	13.08
	Min	Cent	-5.5	-3.5	-2.2	-0.1	-6.3	-69.20
		44	-0.0	-9.7	-2.2	0.3	-10.1	-4.99
		101	-0.0	-1.0	-2.2	0.7	-2.7	-57.41
		109	-11.2	-1.0	-2.2	0.1	-11.6	-79.79
		5	-11.2	-9.7	-2.2	-3.1	-11.8	-75.83

		NODE	Mxx	Myy	Mxy	Mmax	Mmin	ANGLE
	Max	Cent	14.6	10.6	2.4	15.1	10.6	14.02
		44	8.9	1.0	5.9	11.5	0.7	28.40
		101	8.7	4.1	2.5	9.6	3.1	20.10
		109	8.4	10.0	4.3	12.0	6.5	65.06
		5	40.0	35.3	4.3	41.0	28.5	12.22
	Min	Cent	-3.8	1.9	-1.3	4.2	-3.9	-29.11
		44	1.1	-1.7	-4.5	1.9	-4.8	-1.23
		101	-2.7	1.2	-0.2	1.7	-2.7	-86.80
		109	-5.2	-0.0	-4.7	3.0	-5.6	-77.82
		5	-15.6	-2.0	-5.7	8.9	-16.7	-24.67

		NODE	Vxx	Vyy
	Max	Cent	23.2	-6.8
		44	20.2	2.4
		101	20.2	5.1
		109	51.9	5.1
		5	51.9	2.4
	Min	Cent	-1.0	-29.4
		44	-12.4	-58.4
		101	-12.4	-16.1
		109	-22.2	-16.1
		5	-22.2	-58.4

LC		NODE	Fxx	Fyy	Fxy	Fmax	Fmin	ANGLE
RC ENV~2	Max	Cent	3.4	-0.6	2.3	3.5	-0.7	-5.51
		44	0.5	-1.5	2.3	1.4	-1.7	22.92
		101	0.5	1.6	2.3	3.4	0.3	52.07
		109	6.5	1.6	2.3	6.5	0.9	-3.92
		5	6.5	-1.5	2.3	6.5	-1.6	-2.74
	Min	Cent	-2.1	-1.3	-0.6	0.6	-3.8	46.49
		44	0.2	-4.2	-0.6	0.3	-4.9	-1.53
		101	0.2	0.2	-0.6	0.5	-1.3	-75.86
		109	-4.5	0.2	-0.6	1.5	-5.2	59.04
		5	-4.5	-4.2	-0.6	-1.8	-6.4	46.99

		NODE	Mxx	Myy	Mxy	Mmax	Mmin	ANGLE
	Max	Cent	9.7	7.8	1.0	9.7	7.8	-0.62
		44	6.5	-0.0	2.4	7.1	-0.4	18.67
		101	5.6	3.0	1.6	6.4	2.2	24.38
		109	3.6	6.1	0.1	6.1	3.6	87.68
		5	25.2	23.5	1.1	27.1	20.9	-33.33

Min	Cent	2.2	5.4	-0.0	5.7	1.9	73.31
	44	4.3	-0.9	-1.1	4.5	-1.1	-11.73
	101	1.1	2.3	0.7	2.8	0.8	68.48
	109	-1.1	4.3	-1.1	4.5	-1.2	-80.97
	5	2.9	14.7	-2.9	14.8	2.8	84.63

	NODE	Vxx	Vyy
Max	Cent	16.6	-16.0
	44	10.1	-27.6
	101	10.1	-3.7
	109	33.3	-3.7
	5	33.3	-27.6
Min	Cent	6.1	-21.7
	44	-1.0	-38.0
	101	-1.0	-7.2
	109	3.0	-7.2
	5	3.0	-38.0

ELEM	MAT	SEC	LC		NODE	Fxx	Fyy	Fxy	Fmax	Fmin	ANGLE
89	1	1	SX	(RS)	Cent	3.7	1.0	0.3	3.8	1.0	6.94
					101	3.3	1.6	0.3	3.3	1.5	10.70
					102	3.3	0.5	0.3	3.3	0.5	6.79
					110	4.2	0.5	0.3	4.2	0.5	5.11
					109	4.2	1.6	0.3	4.2	1.5	7.09

	NODE	Mxx	Myy	Mxy	Mmax	Mmin	ANGLE
	Cent	5.1	0.9	0.9	5.3	0.7	11.56
	101	5.6	0.6	0.8	5.7	0.5	9.30
	102	4.7	0.9	0.7	4.8	0.8	10.35
	110	3.9	0.8	0.9	4.1	0.6	14.92
	109	6.4	2.3	1.0	6.6	2.1	13.02

	NODE	Vxx	Vyy
	Cent	3.0	2.6
	101	2.1	5.0
	102	2.1	0.2
	110	4.0	0.2
	109	4.0	5.0

LC		NODE	Fxx	Fyy	Fxy	Fmax	Fmin	ANGLE
SY	(RS)	Cent	1.0	0.9	1.3	2.2	-0.3	43.35
		101	1.3	1.8	1.3	2.8	0.2	50.71
		102	1.3	0.3	1.3	2.1	-0.6	34.69
		110	0.8	0.3	1.3	1.9	-0.7	39.00
		109	0.8	1.8	1.3	2.6	-0.0	55.04

	NODE	Mxx	Myy	Mxy	Mmax	Mmin	ANGLE
	Cent	0.8	1.2	1.2	2.2	-0.3	50.49
	101	1.2	1.3	1.4	2.7	-0.1	45.70
	102	1.4	0.7	1.5	2.6	-0.4	38.05
	110	0.8	0.7	0.9	1.6	-0.2	44.08
	109	1.0	5.0	0.8	5.1	0.9	78.77

	NODE	Vxx	Vyy
	Cent	2.1	5.3
	101	3.3	10.6
	102	3.3	0.3
	110	1.0	0.3
	109	1.0	10.6

LC		NODE	Fxx	Fyy	Fxy	Fmax	Fmin	ANGLE
RC ENV~1	Max	Cent	4.1	1.5	1.6	4.2	1.3	13.34
		101	3.5	2.5	1.6	3.8	2.0	24.22
		102	3.5	0.6	1.6	3.6	0.5	12.24
		110	4.6	0.6	1.6	4.7	0.5	8.95
		109	4.6	2.5	1.6	4.8	2.2	14.63
	Min	Cent	-3.4	-0.6	-0.9	-0.6	-3.4	-89.70
		101	-3.0	-1.0	-0.9	-0.8	-3.0	-89.62

102	-3.0	-0.4	-0.9	-0.4	-3.0	-89.68
110	-3.7	-0.4	-0.9	-0.4	-3.7	-89.75
109	-3.7	-1.0	-0.9	-0.8	-3.7	-89.71

	NODE	Mxx	Myy	Mxy	Mmax	Mmin	ANGLE
Max	Cent	6.1	5.1	1.7	6.8	3.5	27.30
	101	8.3	4.0	1.9	8.7	3.9	13.45
	102	3.2	1.7	2.0	3.9	1.0	29.16
	110	3.3	6.6	1.3	6.6	2.7	85.10
	109	9.5	10.3	1.4	10.5	7.3	78.86
Min	Cent	-4.2	2.0	-0.8	2.3	-4.3	-70.14
	101	-2.8	0.9	-0.8	1.6	-2.8	-86.49
	102	-6.2	-0.1	-0.9	-0.1	-6.2	-88.07
	110	-4.6	3.8	-0.5	3.8	-4.6	-86.75
	109	-3.3	0.3	-0.5	2.1	-3.4	-11.57

	NODE	Vxx	Vyy
Max	Cent	12.8	-0.8
	101	13.2	5.1
	102	13.2	-6.3
	110	12.6	-6.3
	109	12.6	5.1
Min	Cent	3.8	-11.3
	101	3.9	-16.1
	102	3.9	-8.8
	110	2.4	-8.8
	109	2.4	-16.1

LC		NODE	Fxx	Fyy	Fxy	Fmax	Fmin	ANGLE
RC ENV~2	Max	Cent	2.0	1.1	0.6	2.0	0.3	5.52
		101	1.7	1.7	0.6	1.9	0.5	78.81
		102	1.7	0.4	0.6	1.7	-0.0	6.29
		110	2.4	0.4	0.6	2.4	-0.0	4.45
		109	2.4	1.7	0.6	2.4	0.6	4.92
	Min	Cent	-1.3	-0.1	0.1	0.7	-1.4	52.05
		101	-1.2	-0.0	0.1	0.8	-1.3	50.54
		102	-1.2	-0.1	0.1	0.4	-1.3	68.28
		110	-1.4	-0.1	0.1	0.4	-1.5	69.12
		109	-1.4	-0.0	0.1	0.9	-1.5	60.51

	NODE	Mxx	Myy	Mxy	Mmax	Mmin	ANGLE
Max	Cent	2.7	3.8	0.6	4.0	2.4	67.39
	101	5.2	2.9	0.7	5.3	2.8	12.31
	102	-0.2	1.2	0.6	1.4	-0.4	70.33
	110	0.3	5.0	0.4	5.0	0.3	84.97
	109	5.5	6.5	0.6	6.7	5.3	66.07
Min	Cent	-1.0	3.1	-0.1	3.1	-1.0	87.47
	101	0.8	2.2	0.1	2.5	0.8	79.43
	102	-3.5	0.5	0.0	0.5	-3.5	88.01
	110	-2.4	4.4	-0.2	4.4	-2.4	-89.49
	109	0.8	4.7	-0.1	4.7	0.8	-89.80

	NODE	Vxx	Vyy
Max	Cent	9.4	-5.1
	101	9.7	-3.7
	102	9.7	-6.6
	110	9.2	-6.6
	109	9.2	-3.7
Min	Cent	5.8	-7.0
	101	6.5	-7.2
	102	6.5	-6.7
	110	5.2	-6.7
	109	5.2	-7.2

ELEM	MAT	SEC	LC		NODE	Fxx	Fyy	Fxy	Fmax	Fmin	ANGLE
90	1	1	SX	(RS)	Cent	2.5	0.5	0.1	2.5	0.5	3.89
					102	2.4	0.8	0.1	2.4	0.8	4.68
					103	2.4	0.2	0.1	2.4	0.2	3.55
					111	2.5	0.2	0.1	2.5	0.2	3.33
					110	2.5	0.8	0.1	2.5	0.8	4.30

	NODE	Mxx	Myy	Mxy	Mmax	Mmin	ANGLE
	Cent	3.9	0.7	0.6	4.0	0.6	9.62
	102	4.7	0.9	0.7	4.8	0.8	9.87
	103	3.4	0.4	0.5	3.5	0.3	9.69
	111	3.3	0.5	0.5	3.3	0.4	9.31
	110	4.3	0.9	0.6	4.4	0.8	9.99

	NODE	Vxx	Vyy
	Cent	1.9	0.2
	102	2.1	0.2
	103	2.1	0.3
	111	1.7	0.3
	110	1.7	0.2

LC		NODE	Fxx	Fyy	Fxy	Fmax	Fmin	ANGLE
SY (RS)		Cent	1.2	0.3	0.9	1.8	-0.3	32.12
		102	1.4	0.3	0.9	1.9	-0.2	30.23
		103	1.4	0.3	0.9	1.9	-0.3	29.97
		111	1.1	0.3	0.9	1.7	-0.4	33.83
		110	1.1	0.3	0.9	1.7	-0.3	34.12

	NODE	Mxx	Myy	Mxy	Mmax	Mmin	ANGLE
	Cent	1.2	0.9	1.2	2.3	-0.2	41.88
	102	1.3	0.7	1.2	2.3	-0.3	38.07
	103	1.6	0.8	1.2	2.5	-0.0	36.59
	111	1.1	1.4	1.3	2.6	-0.0	48.43
	110	0.7	0.7	1.4	2.1	-0.6	44.51

	NODE	Vxx	Vyy
	Cent	0.4	0.7
	102	0.5	0.3
	103	0.5	1.2
	111	0.6	1.2
	110	0.6	0.3

LC		NODE	Fxx	Fyy	Fxy	Fmax	Fmin	ANGLE
RC ENV~1	Max	Cent	2.7	0.6	1.2	2.8	0.5	9.62
		102	2.6	0.9	1.2	2.7	0.8	11.41
		103	2.6	0.4	1.2	2.7	0.3	9.00
		111	2.8	0.4	1.2	2.9	0.3	8.29
		110	2.8	0.9	1.2	2.9	0.8	10.32
	Min	Cent	-2.2	-0.4	-0.7	-0.4	-2.2	86.93
		102	-2.2	-0.7	-0.7	-0.7	-2.2	86.30
		103	-2.2	-0.2	-0.7	-0.1	-2.2	87.26
		111	-2.3	-0.2	-0.7	-0.1	-2.3	87.37
		110	-2.3	-0.7	-0.7	-0.7	-2.3	86.50

	NODE	Mxx	Myy	Mxy	Mmax	Mmin	ANGLE
Max	Cent	1.2	3.0	1.9	3.6	0.5	69.85
	102	3.2	1.7	2.0	4.0	0.9	30.62
	103	-1.1	1.6	1.9	2.3	-1.7	69.94
	111	-2.0	3.1	1.7	3.5	-2.2	77.17
	110	4.6	6.9	1.8	7.0	4.0	85.44
Min	Cent	-6.7	1.1	-0.6	1.2	-6.7	-83.33
	102	-6.2	-0.1	-0.5	-0.1	-6.2	89.77
	103	-8.6	-0.1	-0.5	-0.0	-8.6	-85.71
	111	-9.5	0.2	-0.8	0.4	-9.5	-82.78
	110	-4.0	3.9	-1.0	3.9	-4.0	-88.53

	NODE	Vxx	Vyy
Max	Cent	11.3	-3.6
	102	9.2	-6.3
	103	9.2	-0.6
	111	13.5	-0.6
	110	13.5	-6.3
Min	Cent	5.2	-5.6
	102	3.3	-8.8
	103	3.3	-3.1
	111	7.1	-3.1

		110	7.1	-8.8			

LC		NODE	Fxx	Fyy	Fxy	Fmax	Fmin	ANGLE
RC ENV~2	Max	Cent	1.4	0.3	0.4	1.4	-0.0	9.70
		102	1.3	0.5	0.4	1.3	-0.1	9.52
		103	1.3	0.2	0.4	1.3	0.0	11.28
		111	1.4	0.2	0.4	1.5	0.0	9.89
		110	1.4	0.5	0.4	1.5	-0.1	8.50
	Min	Cent	-0.8	-0.1	0.2	0.3	-0.9	72.04
		102	-0.8	-0.2	0.2	0.3	-0.8	53.62
		103	-0.8	0.0	0.2	0.3	-0.9	70.22
		111	-0.9	0.0	0.2	0.3	-0.9	70.88
		110	-0.9	-0.2	0.2	0.4	-0.9	51.82

	NODE	Mxx	Myy	Mxy	Mmax	Mmin	ANGLE
Max	Cent	-1.8	2.3	0.7	2.3	-1.9	82.01
	102	-0.2	1.2	0.7	1.5	-0.5	66.94
	103	-3.9	0.9	0.8	1.0	-4.0	81.99
	111	-4.7	1.7	0.4	1.7	-4.7	87.26
	110	1.5	5.2	0.4	5.3	1.5	85.11
Min	Cent	-4.5	1.8	0.2	1.8	-4.6	88.42
	102	-3.5	0.5	0.2	0.6	-3.5	85.44
	103	-6.3	0.6	0.3	0.6	-6.3	87.47
	111	-7.0	1.3	-0.0	1.3	-7.0	-89.71
	110	-1.5	4.6	-0.1	4.6	-1.5	89.72

	NODE	Vxx	Vyy
Max	Cent	8.5	-4.0
	102	6.8	-6.6
	103	6.8	-1.5
	111	10.1	-1.5
	110	10.1	-6.6
Min	Cent	6.6	-4.3
	102	4.8	-6.7
	103	4.8	-1.9
	111	8.3	-1.9
	110	8.3	-6.7

ELEM	MAT	SEC	LC		NODE	Fxx	Fyy	Fxy	Fmax	Fmin	ANGLE
91	1	1	SX (RS)		Cent	1.7	0.2	0.3	1.7	0.1	11.43
					103	1.8	0.4	0.3	1.8	0.3	12.25
					104	1.8	0.1	0.3	1.8	0.0	10.12
					112	1.6	0.1	0.3	1.7	0.0	11.04
					111	1.6	0.4	0.3	1.7	0.3	13.59

	NODE	Mxx	Myy	Mxy	Mmax	Mmin	ANGLE
	Cent	2.9	0.3	0.3	2.9	0.3	7.65
	103	3.5	0.4	0.4	3.6	0.4	7.11
	104	2.4	0.2	0.3	2.4	0.2	7.95
	112	2.3	0.3	0.3	2.3	0.2	8.33
	111	3.4	0.5	0.4	3.4	0.4	7.71

	NODE	Vxx	Vyy
	Cent	1.9	0.2
	103	2.0	0.3
	104	2.0	0.1
	112	1.8	0.1
	111	1.8	0.3

LC		NODE	Fxx	Fyy	Fxy	Fmax	Fmin	ANGLE
SY (RS)		Cent	1.6	0.3	0.6	1.8	0.1	22.55
		103	1.9	0.3	0.6	2.1	0.1	18.82
		104	1.9	0.4	0.6	2.1	0.2	19.96
		112	1.3	0.4	0.6	1.6	0.1	27.16
		111	1.3	0.3	0.6	1.6	-0.0	25.33

	NODE	Mxx	Myy	Mxy	Mmax	Mmin	ANGLE
	Cent	1.3	1.1	1.2	2.4	-0.0	42.29

103	1.5	0.8	1.2	2.5	-0.1	37.25
104	1.6	0.9	1.3	2.6	-0.1	37.50
112	1.1	1.2	1.2	2.4	-0.1	46.43
111	1.1	1.4	1.2	2.5	0.1	48.66

	NODE	Vxx	Vyy
	Cent	0.1	1.0
	103	0.4	1.2
	104	0.4	0.8
	112	0.5	0.8
	111	0.5	1.2

LC		NODE	Fxx	Fyy	Fxy	Fmax	Fmin	ANGLE
RC ENV~1	Max	Cent	1.8	0.4	0.7	2.0	0.2	24.26
		103	2.0	0.5	0.7	2.3	0.4	21.32
		104	2.0	0.5	0.7	2.3	0.2	22.15
		112	1.8	0.5	0.7	1.9	0.1	13.48
		111	1.8	0.5	0.7	1.9	0.4	16.45
	Min	Cent	-1.5	-0.3	-0.5	-0.1	-1.6	-82.21
		103	-1.8	-0.3	-0.5	-0.3	-1.9	-82.02
		104	-1.8	-0.3	-0.5	-0.2	-2.0	-72.63
		112	-1.4	-0.3	-0.5	-0.1	-1.4	-63.31
		111	-1.4	-0.3	-0.5	-0.3	-1.4	-80.22

		NODE	Mxx	Myy	Mxy	Mmax	Mmin	ANGLE
	Max	Cent	-2.5	2.1	1.7	2.5	-2.6	75.56
		103	-1.1	1.6	1.8	2.2	-1.4	71.48
		104	-3.9	1.2	1.8	1.7	-4.0	74.36
		112	-3.8	2.4	1.7	2.8	-3.9	77.89
		111	-1.2	3.2	1.6	3.6	-1.3	76.99
	Min	Cent	-9.5	-0.1	-0.8	0.0	-9.5	-83.46
		103	-8.8	-0.1	-0.7	0.0	-8.8	-83.27
		104	-10.6	-0.6	-0.8	-0.5	-10.6	-83.80
		112	-10.2	-0.0	-0.8	0.1	-10.2	-83.37
		111	-8.4	0.4	-0.8	0.5	-8.4	-82.96

	NODE	Vxx	Vyy
Max	Cent	4.7	-0.7
	103	4.9	-0.6
	104	4.9	-0.7
	112	4.5	-0.7
	111	4.5	-0.6
Min	Cent	0.7	-2.7
	103	0.8	-3.1
	104	0.8	-2.3
	112	0.7	-2.3
	111	0.7	-3.1

LC		NODE	Fxx	Fyy	Fxy	Fmax	Fmin	ANGLE
RC ENV~2	Max	Cent	0.9	0.2	0.2	0.9	0.0	10.37
		103	0.8	0.3	0.2	0.9	-0.0	10.49
		104	0.8	0.1	0.2	0.9	0.0	11.95
		112	1.0	0.1	0.2	1.0	0.1	10.25
		111	1.0	0.3	0.2	1.0	0.0	9.14
	Min	Cent	-0.6	0.0	0.1	0.1	-0.6	79.89
		103	-0.7	-0.1	0.1	0.2	-0.7	65.75
		104	-0.7	0.0	0.1	0.1	-0.7	83.96
		112	-0.6	0.0	0.1	0.1	-0.6	83.04
		111	-0.6	-0.1	0.1	0.2	-0.6	54.94

		NODE	Mxx	Myy	Mxy	Mmax	Mmin	ANGLE
	Max	Cent	-5.0	1.0	0.5	1.1	-5.0	86.65
		103	-3.9	0.9	0.5	0.9	-4.0	85.10
		104	-6.1	0.3	0.5	0.4	-6.1	85.60
		112	-5.9	1.2	0.4	1.2	-5.9	86.86
		111	-3.9	1.9	0.4	1.9	-3.9	86.90
	Min	Cent	-7.0	0.7	0.1	0.7	-7.0	89.32
		103	-6.4	0.5	0.1	0.5	-6.4	88.98
		104	-7.9	0.1	0.1	0.1	-7.9	88.46
		112	-7.6	0.8	0.0	0.8	-7.6	89.38
		111	-6.2	1.4	0.0	1.4	-6.2	89.84

	NODE	Vxx	Vyy
Max	Cent	3.5	-1.3
	103	3.6	-1.5
	104	3.6	-1.2
	112	3.3	-1.2
	111	3.3	-1.5
Min	Cent	2.1	-1.7
	103	2.1	-1.9
	104	2.1	-1.5
	112	2.0	-1.5
	111	2.0	-1.9

ELEM	MAT	SEC	LC		NODE	Fxx	Fyy	Fxy	Fmax	Fmin	ANGLE
92	1	1	SX (RS)		Cent	1.1	0.1	0.4	1.2	-0.1	19.79
					104	1.3	0.1	0.4	1.4	0.0	18.27
					105	1.3	0.2	0.4	1.4	0.1	18.88
					113	0.9	0.2	0.4	1.1	0.0	24.59
					112	0.9	0.1	0.4	1.1	-0.0	23.66

	NODE	Mxx	Myy	Mxy	Mmax	Mmin	ANGLE
	Cent	1.8	0.2	0.2	1.8	0.2	7.37
	104	2.4	0.2	0.2	2.4	0.2	6.40
	105	1.2	0.2	0.2	1.2	0.2	10.79
	113	1.2	0.2	0.2	1.3	0.2	9.78
	112	2.3	0.3	0.2	2.4	0.2	6.18

	NODE	Vxx	Vyy
	Cent	2.0	0.1
	104	2.1	0.1
	105	2.1	0.1
	113	2.0	0.1
	112	2.0	0.1

LC		NODE	Fxx	Fyy	Fxy	Fmax	Fmin	ANGLE
SY (RS)		Cent	1.9	0.3	0.6	2.1	0.1	18.55
		104	2.3	0.4	0.6	2.5	0.2	16.40
		105	2.3	0.3	0.6	2.4	0.1	15.58
		113	1.6	0.3	0.6	1.8	0.1	21.18
		112	1.6	0.4	0.6	1.9	0.2	22.59

	NODE	Mxx	Myy	Mxy	Mmax	Mmin	ANGLE
	Cent	1.2	1.1	1.4	2.6	-0.2	43.56
	104	1.6	0.9	1.4	2.7	-0.2	38.08
	105	1.3	0.7	1.5	2.6	-0.5	39.62
	113	1.0	1.6	1.4	2.7	-0.1	50.40
	112	1.1	1.2	1.3	2.5	-0.1	46.26

	NODE	Vxx	Vyy
	Cent	0.6	1.2
	104	0.4	0.8
	105	0.4	1.7
	113	0.9	1.7
	112	0.9	0.8

LC		NODE	Fxx	Fyy	Fxy	Fmax	Fmin	ANGLE
RC ENV~1	Max	Cent	2.0	0.4	0.6	2.2	0.2	19.01
		104	2.3	0.5	0.6	2.5	0.3	16.91
		105	2.3	0.4	0.6	2.5	0.3	16.54
		113	1.7	0.4	0.6	2.0	0.3	21.55
		112	1.7	0.5	0.6	2.0	0.2	22.13
	Min	Cent	-1.9	-0.3	-0.6	-0.1	-2.0	-71.92
		104	-2.3	-0.4	-0.6	-0.2	-2.4	-74.11
		105	-2.3	-0.2	-0.6	-0.0	-2.4	-75.34
		113	-1.5	-0.2	-0.6	0.0	-1.7	-69.20
		112	-1.5	-0.4	-0.6	-0.1	-1.7	-66.91

NODE	Mxx	Myy	Mxy	Mmax	Mmin	ANGLE

Max	Cent	-4.1	2.0	1.9	2.5	-4.2	75.27
	104	-3.8	1.2	1.8	1.7	-3.9	74.01
	105	-4.4	1.4	1.9	2.0	-4.6	73.08
	113	-4.3	3.0	1.9	3.5	-4.4	76.44
	112	-3.7	2.4	1.8	2.8	-3.8	76.87
Min	Cent	-9.7	-0.2	-0.9	-0.1	-9.7	-82.43
	104	-10.6	-0.5	-1.0	-0.4	-10.6	-82.53
	105	-9.0	-0.1	-1.1	0.1	-9.0	-81.37
	113	-8.8	-0.1	-0.9	-0.0	-8.8	-82.06
	112	-10.2	-0.0	-0.8	0.1	-10.2	-83.65

	NODE	Vxx	Vyy
Max	Cent	1.3	-0.2
	104	1.4	-0.7
	105	1.4	0.4
	113	1.2	0.4
	112	1.2	-0.7
Min	Cent	-2.8	-2.7
	104	-2.8	-2.3
	105	-2.8	-3.1
	113	-2.7	-3.1
	112	-2.7	-2.3

LC		NODE	Fxx	Fyy	Fxy	Fmax	Fmin	ANGLE
RC ENV~2	Max	Cent	0.6	0.1	0.1	0.6	0.1	8.36
		104	0.6	0.1	0.1	0.6	0.0	7.28
		105	0.6	0.2	0.1	0.6	0.2	10.47
		113	0.6	0.2	0.1	0.6	0.2	9.80
		112	0.6	0.1	0.1	0.6	0.1	6.94
	Min	Cent	-0.4	0.1	-0.0	0.1	-0.4	-85.57
		104	-0.5	0.0	-0.0	0.0	-0.5	74.04
		105	-0.5	0.1	-0.0	0.1	-0.5	-85.72
		113	-0.4	0.1	-0.0	0.1	-0.4	-84.21
		112	-0.4	0.0	-0.0	0.1	-0.4	75.25

	NODE	Mxx	Myy	Mxy	Mmax	Mmin	ANGLE
Max	Cent	-5.8	0.9	0.5	0.9	-5.8	87.72
	104	-6.0	0.3	0.4	0.4	-6.1	86.12
	105	-5.7	0.7	0.4	0.7	-5.7	87.89
	113	-5.5	1.5	0.5	1.5	-5.5	87.47
	112	-5.8	1.2	0.5	1.2	-5.9	86.13
Min	Cent	-7.2	0.6	0.2	0.6	-7.2	88.09
	104	-7.8	0.1	0.1	0.1	-7.9	88.62
	105	-6.8	0.5	0.1	0.5	-6.8	88.06
	113	-6.6	1.0	0.2	1.0	-6.6	87.62
	112	-7.5	0.8	0.2	0.8	-7.5	88.18

	NODE	Vxx	Vyy
Max	Cent	-0.3	-1.0
	104	-0.3	-1.2
	105	-0.3	-0.9
	113	-0.2	-0.9
	112	-0.2	-1.2
Min	Cent	-1.7	-1.5
	104	-1.8	-1.5
	105	-1.8	-1.4
	113	-1.6	-1.4
	112	-1.6	-1.5

ELEM	MAT	SEC	LC		NODE	Fxx	Fyy	Fxy	Fmax	Fmin	ANGLE
93	1	1	SX	(RS)	Cent	0.6	0.2	0.4	0.9	-0.1	34.15
					105	0.7	0.1	0.4	0.9	-0.1	27.35
					106	0.7	0.4	0.4	1.0	0.1	34.83
					114	0.5	0.4	0.4	0.9	-0.0	41.95
					113	0.5	0.1	0.4	0.8	-0.2	33.03

	NODE	Mxx	Myy	Mxy	Mmax	Mmin	ANGLE
	Cent	0.6	0.4	0.2	0.8	0.2	29.26
	105	1.2	0.2	0.2	1.3	0.2	12.38
	106	0.3	0.6	0.3	0.8	0.1	57.35

114	0.3	0.6	0.2	0.7	0.2	58.88
113	1.3	0.2	0.2	1.3	0.2	7.61

NODE	Vxx	Vyy
Cent	2.2	0.1
105	2.3	0.1
106	2.3	0.1
114	2.1	0.1
113	2.1	0.1

LC		NODE	Fxx	Fyy	Fxy	Fmax	Fmin	ANGLE
SY (RS)		Cent	2.2	0.3	0.9	2.6	-0.1	22.10
		105	2.6	0.3	0.9	2.9	0.0	19.59
		106	2.6	0.3	0.9	2.9	-0.0	19.47
		114	1.9	0.3	0.9	2.3	-0.1	25.19
		113	1.9	0.3	0.9	2.3	-0.1	25.37

NODE	Mxx	Myy	Mxy	Mmax	Mmin	ANGLE
Cent	1.1	0.7	1.7	2.7	-0.9	41.12
105	1.4	0.7	1.5	2.6	-0.5	38.69
106	1.2	0.4	1.7	2.5	-0.9	38.72
114	1.4	0.6	2.0	3.1	-1.1	39.36
113	1.0	1.6	1.9	3.2	-0.6	49.04

NODE	Vxx	Vyy
Cent	1.1	0.6
105	0.8	1.7
106	0.8	0.7
114	1.5	0.7
113	1.5	1.7

LC		NODE	Fxx	Fyy	Fxy	Fmax	Fmin	ANGLE
RC ENV~1	Max	Cent	2.3	0.5	0.8	2.6	0.3	21.05
		105	2.7	0.4	0.8	2.9	0.2	18.37
		106	2.7	0.5	0.8	2.9	0.4	18.48
		114	1.9	0.5	0.8	2.3	0.3	24.45
		113	1.9	0.4	0.8	2.3	0.2	24.28
	Min	Cent	-2.2	-0.2	-1.0	0.2	-2.6	-67.43
		105	-2.6	-0.2	-1.0	0.2	-2.9	-69.33
		106	-2.6	-0.2	-1.0	0.1	-2.9	-67.82
		114	-1.8	-0.2	-1.0	0.1	-2.3	-62.79
		113	-1.8	-0.2	-1.0	0.2	-2.3	-63.95

NODE	Mxx	Myy	Mxy	Mmax	Mmin	ANGLE
Max Cent	-3.4	2.4	2.1	3.1	-3.9	71.82
105	-4.4	1.3	1.8	1.9	-4.6	74.02
106	-1.9	2.7	1.8	2.9	-2.5	69.19
114	-1.9	4.3	2.5	4.6	-2.8	68.75
113	-4.6	2.9	2.5	3.7	-4.7	73.79
Min Cent	-6.9	1.0	-1.4	1.3	-6.9	-78.71
105	-9.3	-0.1	-1.3	0.1	-9.3	-80.27
106	-4.6	1.2	-1.6	1.2	-4.6	-87.64
114	-4.9	2.5	-1.6	2.5	-5.0	87.71
113	-9.4	-0.2	-1.2	0.0	-9.4	-79.90

NODE	Vxx	Vyy
Max Cent	-2.2	-1.3
105	-2.2	0.4
106	-2.2	-1.6
114	-2.1	-1.6
113	-2.1	0.4
Min Cent	-8.2	-2.5
105	-8.6	-3.1
106	-8.6	-3.1
114	-7.8	-3.1
113	-7.8	-3.1

LC		NODE	Fxx	Fyy	Fxy	Fmax	Fmin	ANGLE

RC ENV~2	Max	Cent	0.3	0.2	-0.0	0.4	0.2	-44.13
		105	0.4	0.2	-0.0	0.4	0.1	-17.46
		106	0.4	0.3	-0.0	0.4	0.2	-45.55
		114	0.3	0.3	-0.0	0.4	0.2	-54.90
		113	0.3	0.2	-0.0	0.3	0.1	-42.71
	Min	Cent	-0.2	0.1	-0.2	0.1	-0.3	-66.64
		105	-0.3	0.1	-0.2	0.2	-0.3	-69.98
		106	-0.3	0.0	-0.2	0.1	-0.3	-67.16
		114	-0.2	0.0	-0.2	0.1	-0.3	-62.37
		113	-0.2	0.1	-0.2	0.2	-0.3	-63.01

	NODE	Mxx	Myy	Mxy	Mmax	Mmin	ANGLE
Max	Cent	-4.5	1.9	0.4	1.9	-4.5	88.67
	105	-5.8	0.7	0.3	0.7	-5.8	89.46
	106	-3.0	2.0	0.1	2.0	-3.0	-88.37
	114	-3.2	3.2	0.5	3.3	-3.3	87.72
	113	-5.9	1.4	0.6	1.5	-5.9	86.82
Min	Cent	-5.2	1.5	0.1	1.5	-5.2	87.84
	105	-6.9	0.4	-0.0	0.4	-6.9	89.16
	106	-3.4	1.6	-0.2	1.6	-3.4	89.24
	114	-3.7	2.8	0.2	2.9	-3.7	86.34
	113	-7.0	0.9	0.4	1.0	-7.0	86.14

	NODE	Vxx	Vyy
Max	Cent	-4.1	-1.6
	105	-4.3	-0.9
	106	-4.3	-2.2
	114	-3.9	-2.2
	113	-3.9	-0.9
Min	Cent	-6.0	-1.9
	105	-6.3	-1.4
	106	-6.3	-2.4
	114	-5.7	-2.4
	113	-5.7	-1.4

ELEM	MAT	SEC	LC	NODE	Fxx	Fyy	Fxy	Fmax	Fmin	ANGLE
94	1	1	SX (RS)	Cent	1.0	0.4	0.4	1.2	0.2	28.36
				106	0.7	0.2	0.4	0.9	-0.0	29.71
				107	0.7	0.7	0.4	1.1	0.3	45.83
				115	1.3	0.7	0.4	1.5	0.5	26.30
				114	1.3	0.2	0.4	1.4	0.1	17.92

	NODE	Mxx	Myy	Mxy	Mmax	Mmin	ANGLE
	Cent	0.9	0.7	0.4	1.3	0.4	37.74
	106	0.3	0.6	0.3	0.8	0.1	55.88
	107	1.5	0.3	0.4	1.7	0.1	16.95
	115	2.2	2.0	0.5	2.5	1.6	38.74
	114	0.4	0.5	0.4	0.8	0.1	47.05

	NODE	Vxx	Vyy
	Cent	3.3	1.9
	106	2.6	0.1
	107	2.6	3.8
	115	4.0	3.8
	114	4.0	0.1

LC	NODE	Fxx	Fyy	Fxy	Fmax	Fmin	ANGLE
SY (RS)	Cent	2.4	1.3	1.3	3.2	0.5	33.69
	106	2.7	0.3	1.3	3.3	-0.2	23.51
	107	2.7	2.5	1.3	3.9	1.3	42.29
	115	2.1	2.5	1.3	3.6	1.0	49.68
	114	2.1	0.3	1.3	2.7	-0.3	28.04

	NODE	Mxx	Myy	Mxy	Mmax	Mmin	ANGLE
	Cent	1.8	1.3	1.6	3.2	-0.1	40.03
	106	1.3	0.5	2.1	3.1	-1.3	39.12
	107	4.8	3.5	1.8	6.0	2.2	35.07
	115	1.1	8.4	0.6	8.4	1.0	85.01
	114	1.3	0.6	1.0	2.0	-0.1	34.04

	NODE	Vxx	Vyy
	Cent	4.5	9.6
	106	6.8	0.7
	107	6.8	19.9
	115	2.1	19.9
	114	2.1	0.7

LC		NODE	Fxx	Fyy	Fxy	Fmax	Fmin	ANGLE
RC ENV~1	Max	Cent	2.4	1.7	1.1	3.2	0.9	36.27
		106	2.7	0.5	1.1	3.1	0.2	21.90
		107	2.7	3.1	1.1	4.0	1.8	50.79
		115	2.1	3.1	1.1	3.8	1.4	58.11
		114	2.1	0.5	1.1	2.6	0.3	26.48
	Min	Cent	-2.4	-0.9	-1.5	0.0	-3.3	-58.05
		106	-2.7	-0.2	-1.5	0.3	-3.4	-58.63
		107	-2.7	-1.8	-1.5	-0.7	-3.8	-53.61
		115	-2.0	-1.8	-1.5	-0.4	-3.4	-47.01
		114	-2.0	-0.2	-1.5	0.2	-2.9	-67.42

	NODE	Mxx	Myy	Mxy	Mmax	Mmin	ANGLE
Max	Cent	1.0	5.1	1.2	5.3	0.6	-79.68
	106	-1.9	2.6	1.7	2.8	-2.5	69.68
	107	6.9	6.8	1.0	7.8	5.9	43.20
	115	4.4	14.4	0.3	14.4	4.3	88.36
	114	-3.3	3.9	1.1	3.9	-3.4	-88.90
Min	Cent	-2.7	2.2	-2.0	2.9	-3.5	-70.40
	106	-5.1	1.1	-2.5	1.2	-5.5	-81.54
	107	-2.7	-0.2	-2.6	1.5	-4.3	-57.64
	115	-0.1	-2.3	-1.0	1.3	-2.6	-14.79
	114	-6.8	2.2	-0.8	2.3	-6.8	-88.21

	NODE	Vxx	Vyy
Max	Cent	-5.5	5.9
	106	-2.2	-1.6
	107	-2.2	14.9
	115	-6.9	14.9
	114	-6.9	-1.6
Min	Cent	-17.2	-13.3
	106	-16.4	-3.1
	107	-16.4	-24.8
	115	-18.0	-24.8
	114	-18.0	-3.1

LC		NODE	Fxx	Fyy	Fxy	Fmax	Fmin	ANGLE
RC ENV~2	Max	Cent	0.1	0.7	-0.2	0.8	-0.1	-68.28
		106	0.0	0.3	-0.2	0.5	-0.1	-54.02
		107	0.0	1.2	-0.2	1.3	-0.0	-74.56
		115	0.2	1.2	-0.2	1.3	0.1	-75.38
		114	0.2	0.3	-0.2	0.5	-0.1	-48.25
	Min	Cent	-0.0	0.3	-0.4	0.4	-0.1	-58.64
		106	-0.1	0.1	-0.4	0.2	-0.3	-54.35
		107	-0.1	0.5	-0.4	0.6	-0.1	-70.17
		115	-0.1	0.5	-0.4	0.6	-0.2	-62.35
		114	-0.1	0.1	-0.4	0.3	-0.3	-59.22

	NODE	Mxx	Myy	Mxy	Mmax	Mmin	ANGLE
Max	Cent	-0.4	3.9	-0.4	4.0	-0.5	-80.45
	106	-3.2	2.0	-0.4	2.1	-3.2	-82.84
	107	3.7	4.2	-0.8	5.1	2.7	-49.18
	115	3.2	7.0	-0.3	7.1	3.1	-81.87
	114	-4.6	2.9	0.2	3.0	-4.6	-89.24
Min	Cent	-1.3	3.3	-0.8	3.4	-1.3	-85.07
	106	-3.8	1.6	-0.8	1.6	-3.9	-85.32
	107	1.8	3.3	-1.3	3.7	1.4	-64.46
	115	1.5	5.5	-0.7	5.6	1.5	-84.26
	114	-5.1	2.6	-0.2	2.6	-5.1	89.13

	NODE	Vxx	Vyy
Max	Cent	-9.6	-2.6
	106	-8.9	-2.2

```
                                    107       -8.9       -3.0
                                    115      -10.3       -3.0
                                    114      -10.3       -2.2
                              Min   Cent     -12.8       -4.4
                                    106      -12.1       -2.4
                                    107      -12.1       -6.5
                                    115      -13.4       -6.5
                                    114      -13.4       -2.4

  ELEM   MAT    SEC        LC        NODE        Fxx        Fyy        Fxy       Fmax       Fmin      ANGLE
------ ------ ------ -------- ---- ------ ---------- ---------- ---------- ---------- ---------- ----------
    95      1      1       SX (RS)   Cent        2.5        0.1        1.2        3.0       -0.4      22.37
                                    107        0.9        0.4        1.2        1.9       -0.6      39.08
                                    108        0.9        0.5        1.2        1.9       -0.5      40.40
                                      6        5.8        0.5        1.2        6.1        0.2      12.11
                                    115        5.8        0.4        1.2        6.1        0.1      11.88

                                    NODE        Mxx        Myy        Mxy       Mmax       Mmin      ANGLE
                              ---- ------ ---------- ---------- ---------- ---------- ---------- ----------
                                    Cent        4.6        1.2        0.9        4.8        0.9      14.61
                                    107        1.8        0.2        0.8        2.2       -0.1      22.88
                                    108        3.7        0.7        3.6        6.1       -1.6      33.61
                                      6       18.0        3.6        3.4       18.7        2.9      12.49
                                    115        2.1        2.0        1.0        3.1        1.0      42.93

                                    NODE        Vxx        Vyy
                              ---- ------ ---------- ----------
                                    Cent        9.1        1.9
                                    107        9.8        3.8
                                    108        9.8        0.0
                                      6       27.9        0.0
                                    115       27.9        3.8

                                LC        NODE        Fxx        Fyy        Fxy       Fmax       Fmin      ANGLE
                          -------- ---- ------ ---------- ---------- ---------- ---------- ---------- ----------
                                SY (RS)   Cent        2.5        3.4        3.4        6.3       -0.4      48.85
                                    107        3.4        2.5        3.4        6.3       -0.4      41.20
                                    108        3.4        9.3        3.4       10.8        1.9      65.64
                                      6        2.0        9.3        3.4       10.6        0.7      68.81
                                    115        2.0        2.5        3.4        5.6       -1.1      47.42

                                    NODE        Mxx        Myy        Mxy       Mmax       Mmin      ANGLE
                              ---- ------ ---------- ---------- ---------- ---------- ---------- ----------
                                    Cent        5.7        8.9        2.4       10.2        4.5      61.91
                                    107        2.7        3.0        1.0        3.9        1.8      49.84
                                    108        8.2        3.3        1.6        8.7        2.8      17.01
                                      6       12.6       37.9        7.2       39.8       10.7      75.16
                                    115        1.2        8.5        7.9       13.5       -3.8      57.53

                                    NODE        Vxx        Vyy
                              ---- ------ ---------- ----------
                                    Cent        8.5       20.6
                                    107       10.2       19.9
                                    108       10.2       61.0
                                      6        6.8       61.0
                                    115        6.8       19.9

                                LC        NODE        Fxx        Fyy        Fxy       Fmax       Fmin      ANGLE
                          -------- ---- ------ ---------- ---------- ---------- ---------- ---------- ----------
                          RC ENV~1  Max   Cent        2.5        2.8        2.7        5.3        0.0      46.60
                                    107        3.7        3.2        2.7        6.1        0.8      42.39
                                    108        3.7        7.5        2.7        8.8        2.3      62.76
                                      6        5.6        7.5        2.7        8.5        0.7      68.54
                                    115        5.6        3.2        2.7        5.7        1.0       6.23
                              Min   Cent       -2.5       -4.0       -4.0        0.5       -7.4     -42.19
                                    107       -3.2       -1.9       -4.0        0.9       -6.6     -69.30
                                    108       -3.2      -11.1       -4.0       -1.5      -12.8     -22.70
                                      6       -6.0      -11.1       -4.0       -1.5      -12.7     -67.17
                                    115       -6.0       -1.9       -4.0        0.8       -6.5     -74.54

                                    NODE        Mxx        Myy        Mxy       Mmax       Mmin      ANGLE
                              ---- ------ ---------- ---------- ---------- ---------- ---------- ----------
                              Max   Cent       11.7       16.4        1.1       16.6       11.0      78.22
                                    107        5.9        6.4       -0.8        9.5        4.9     -43.91
                                    108       13.5        3.3        2.0       13.5        3.3       0.76
                                      6       33.1       59.0        7.4       60.7       32.3      77.28
```

		115	1.0	13.9	7.8	17.4	0.8	65.86
	Min	Cent	-0.3	-1.5	-3.6	2.8	-4.5	-40.38
		107	-0.1	0.4	-3.8	3.0	-2.7	-47.30
		108	-2.9	-3.4	-5.1	0.0	-6.3	-42.95
		6	-2.9	-16.7	-7.0	4.8	-19.0	-17.93
		115	-3.3	-3.2	-7.9	3.6	-10.7	-80.92

		NODE	Vxx	Vyy
	Max	Cent	-5.7	0.7
		107	4.1	14.9
		108	4.1	26.2
		6	4.4	26.2
		115	4.4	14.9
	Min	Cent	-29.1	-40.4
		107	-16.3	-24.8
		108	-16.3	-95.8
		6	-51.4	-95.8
		115	-51.4	-24.8

LC		NODE	Fxx	Fyy	Fxy	Fmax	Fmin	ANGLE
RC ENV~2	Max	Cent	0.6	-0.5	-0.4	0.9	-0.7	-27.48
		107	0.7	1.1	-0.4	2.2	-0.2	-49.92
		108	0.7	-1.7	-0.4	1.1	-1.8	-18.85
		6	1.2	-1.7	-0.4	1.3	-1.8	-7.00
		115	1.2	1.1	-0.4	1.8	0.4	-52.79
	Min	Cent	-0.5	-1.0	-1.3	0.4	-2.0	-41.07
		107	-0.1	0.6	-1.3	0.7	-0.4	-66.31
		108	-0.1	-3.0	-1.3	-0.0	-3.4	-12.32
		6	-1.7	-3.0	-1.3	-0.8	-3.7	-37.03
		115	-1.7	0.6	-1.3	1.0	-2.2	-60.69

		NODE	Mxx	Myy	Mxy	Mmax	Mmin	ANGLE
	Max	Cent	8.5	9.3	-1.2	10.5	7.3	-52.49
		107	4.3	4.3	-1.8	6.9	1.5	-44.56
		108	8.3	-0.0	-0.7	9.1	-0.4	-16.29
		6	23.7	28.0	1.1	28.2	23.5	78.06
		115	-0.7	6.3	0.2	6.4	-0.7	-84.12
	Min	Cent	4.5	7.4	-2.0	8.0	3.7	-65.24
		107	2.2	3.4	-2.7	4.8	1.0	-52.29
		108	4.4	-0.6	-3.0	4.5	-1.2	-8.04
		6	11.1	21.0	-0.9	21.0	11.1	89.48
		115	-2.0	4.8	-0.8	4.8	-2.0	88.31

		NODE	Vxx	Vyy
	Max	Cent	-13.6	-19.8
		107	-3.4	-3.0
		108	-3.4	-34.7
		6	-17.8	-34.7
		115	-17.8	-3.0
	Min	Cent	-21.3	-25.1
		107	-10.3	-6.5
		108	-10.3	-46.6
		6	-36.2	-46.6
		115	-36.2	-6.5

ELEM	MAT	SEC	LC		NODE	Fxx	Fyy	Fxy	Fmax	Fmin	ANGLE
96	1	1	SX	(RS)	Cent	0.5	0.0	0.3	0.7	-0.1	25.22
					116	1.1	0.3	0.3	1.2	0.2	17.81
					117	1.1	0.2	0.3	1.2	0.1	16.40
					124	0.8	0.2	0.3	0.9	0.1	24.09
					123	0.8	0.3	0.3	0.9	0.2	26.76

	NODE	Mxx	Myy	Mxy	Mmax	Mmin	ANGLE
	Cent	0.8	0.3	0.2	0.9	0.2	22.32
	116	0.6	0.2	0.2	0.7	0.1	19.61
	117	0.5	0.1	0.3	0.7	-0.1	26.92
	124	0.3	0.2	0.3	0.5	-0.0	41.94
	123	1.8	1.0	0.1	1.8	0.9	9.67

	NODE	Vxx	Vyy

	Cent	1.4	1.0	
	116	0.4	1.6	
	117	0.4	0.3	
	124	2.6	0.3	
	123	2.6	1.6	

LC		NODE	Fxx	Fyy	Fxy	Fmax	Fmin	ANGLE
SY (RS)		Cent	3.4	0.1	1.2	3.8	-0.3	17.96
		116	4.4	0.6	1.2	4.7	0.3	16.13
		117	4.4	0.6	1.2	4.7	0.3	16.24
		124	2.6	0.6	1.2	3.2	0.1	25.01
		123	2.6	0.6	1.2	3.2	0.1	24.77

	NODE	Mxx	Myy	Mxy	Mmax	Mmin	ANGLE
	Cent	2.6	0.7	0.8	2.9	0.4	20.49
	116	4.6	0.5	0.7	4.7	0.4	9.38
	117	1.1	0.1	0.8	1.5	-0.4	28.08
	124	1.3	0.3	1.0	2.0	-0.3	32.00
	123	4.6	2.3	0.9	4.9	2.0	19.98

	NODE	Vxx	Vyy
	Cent	7.0	1.5
	116	7.1	3.3
	117	7.1	0.5
	124	6.8	0.5
	123	6.8	3.3

LC		NODE	Fxx	Fyy	Fxy	Fmax	Fmin	ANGLE
RC ENV~1	Max	Cent	3.5	0.2	1.4	4.0	-0.1	20.13
		116	4.7	0.5	1.4	5.1	0.1	17.14
		117	4.7	0.8	1.4	5.1	0.3	18.09
		124	2.5	0.8	1.4	3.3	0.0	29.25
		123	2.5	0.5	1.4	3.3	-0.0	27.27
	Min	Cent	-3.3	-0.1	-1.0	0.0	-3.5	-81.85
		116	-4.0	-0.7	-1.0	-0.4	-4.3	-75.19
		117	-4.0	-0.5	-1.0	-0.2	-4.3	-75.94
		124	-2.7	-0.5	-1.0	-0.1	-3.1	-69.77
		123	-2.7	-0.7	-1.0	-0.4	-3.1	-82.32

	NODE	Mxx	Myy	Mxy	Mmax	Mmin	ANGLE
Max	Cent	2.0	1.6	1.3	3.1	0.5	41.01
	116	5.9	0.4	1.1	6.1	0.2	11.01
	117	-1.2	0.6	1.0	0.9	-1.7	64.49
	124	-2.0	1.7	1.4	2.0	-2.5	70.49
	123	6.4	4.7	1.6	7.3	3.8	30.23
Min	Cent	-3.2	0.3	-0.4	0.3	-3.3	-83.61
	116	-3.3	-0.5	-0.3	-0.5	-3.3	-84.05
	117	-3.8	0.3	-0.6	0.3	-3.8	-87.93
	124	-5.1	0.9	-0.6	1.0	-5.1	-83.42
	123	-2.7	0.1	-0.3	0.1	-2.7	-83.27

	NODE	Vxx	Vyy
Max	Cent	14.7	-1.5
	116	13.7	-0.9
	117	13.7	-1.4
	124	16.4	-1.4
	123	16.4	-0.9
Min	Cent	0.8	-4.9
	116	-0.5	-7.5
	117	-0.5	-2.7
	124	2.1	-2.7
	123	2.1	-7.5

LC		NODE	Fxx	Fyy	Fxy	Fmax	Fmin	ANGLE
RC ENV~2	Max	Cent	0.3	0.1	0.4	0.6	-0.1	37.52
		116	0.8	0.0	0.4	1.0	-0.1	20.49
		117	0.8	0.3	0.4	1.0	0.1	30.22
		124	0.1	0.3	0.4	0.6	-0.0	60.83
		123	0.1	0.0	0.4	0.3	-0.1	40.69

Min	Cent	0.1	0.0	0.1	0.2	-0.3	42.16
	116	0.0	-0.2	0.1	0.1	-0.3	42.71
	117	0.0	0.1	0.1	0.2	-0.1	51.69
	124	-0.3	0.1	0.1	0.2	-0.5	41.61
	123	-0.3	-0.2	0.1	0.1	-0.6	49.56

	NODE	Mxx	Myy	Mxy	Mmax	Mmin	ANGLE
Max	Cent	0.1	1.2	0.7	1.5	-0.2	64.98
	116	2.4	0.0	0.6	2.6	-0.1	12.48
	117	-2.1	0.5	0.3	0.5	-2.2	82.49
	124	-3.3	1.3	0.6	1.4	-3.3	83.36
	123	3.5	3.0	0.8	4.1	2.4	37.10
Min	Cent	-1.0	0.9	0.3	1.0	-1.0	80.77
	116	1.2	-0.1	0.3	1.3	-0.3	13.58
	117	-2.8	0.3	0.0	0.3	-2.8	89.51
	124	-3.8	1.2	0.3	1.2	-3.8	86.90
	123	1.3	2.1	0.5	2.4	1.1	63.44

	NODE	Vxx	Vyy
Max	Cent	10.2	-2.8
	116	8.5	-3.8
	117	8.5	-1.9
	124	12.0	-1.9
	123	12.0	-3.8
Min	Cent	7.7	-3.7
	116	6.6	-5.3
	117	6.6	-2.1
	124	8.6	-2.1
	123	8.6	-5.3

ELEM	MAT	SEC	LC		NODE	Fxx	Fyy	Fxy	Fmax	Fmin	ANGLE
97	1	1	SX	(RS)	Cent	0.9	0.1	0.1	1.0	0.1	9.41
					117	1.2	0.3	0.1	1.2	0.3	8.47
					118	1.2	0.0	0.1	1.2	0.0	6.73
					125	0.7	0.0	0.1	0.7	0.0	11.27
					124	0.7	0.3	0.1	0.7	0.3	16.74

	NODE	Mxx	Myy	Mxy	Mmax	Mmin	ANGLE
	Cent	0.5	0.1	0.2	0.6	0.0	22.92
	117	0.2	0.0	0.2	0.3	-0.1	35.76
	118	1.0	0.1	0.1	1.0	0.0	8.81
	125	1.2	0.1	0.2	1.3	0.1	11.33
	124	0.3	0.2	0.3	0.5	-0.0	41.68

	NODE	Vxx	Vyy
	Cent	2.1	0.3
	117	1.8	0.3
	118	1.8	0.2
	125	2.3	0.2
	124	2.3	0.3

LC		NODE	Fxx	Fyy	Fxy	Fmax	Fmin	ANGLE
SY	(RS)	Cent	3.0	0.2	0.4	3.0	0.1	7.87
		117	3.4	0.4	0.4	3.5	0.4	7.29
		118	3.4	0.2	0.4	3.5	0.1	6.77
		125	2.6	0.2	0.4	2.6	0.1	9.00
		124	2.6	0.4	0.4	2.7	0.4	9.93

	NODE	Mxx	Myy	Mxy	Mmax	Mmin	ANGLE
	Cent	1.3	0.2	1.4	2.3	-0.8	34.41
	117	2.8	0.5	1.3	3.4	-0.1	23.97
	118	2.1	0.3	1.4	2.9	-0.4	28.75
	125	1.4	0.5	1.4	2.4	-0.6	36.12
	124	1.1	0.3	1.3	2.1	-0.7	35.78

	NODE	Vxx	Vyy
	Cent	4.0	0.6
	117	7.2	0.5
	118	7.2	0.7

		125	0.8	0.7
		124	0.8	0.5

LC		NODE	Fxx	Fyy	Fxy	Fmax	Fmin	ANGLE
RC ENV~1	Max	Cent	2.9	0.3	0.4	3.0	0.2	9.24
		117	3.2	0.5	0.4	3.3	0.5	9.07
		118	3.2	0.2	0.4	3.3	0.1	8.04
		125	2.6	0.2	0.4	2.7	0.1	9.91
		124	2.6	0.5	0.4	2.7	0.5	11.49
	Min	Cent	-3.0	-0.1	-0.3	-0.1	-3.1	-83.41
		117	-3.6	-0.3	-0.3	-0.3	-3.6	-84.19
		118	-3.6	-0.2	-0.3	-0.1	-3.6	-84.38
		125	-2.5	-0.2	-0.3	-0.1	-2.6	-81.97
		124	-2.5	-0.3	-0.3	-0.2	-2.6	-81.58

		NODE	Mxx	Myy	Mxy	Mmax	Mmin	ANGLE
	Max	Cent	-3.1	0.7	1.2	1.0	-3.4	73.83
		117	0.2	0.7	1.2	1.7	-0.7	51.29
		118	-3.7	0.4	1.1	0.6	-4.0	76.25
		125	-4.5	0.9	1.1	1.2	-4.6	78.93
		124	-2.0	1.8	1.2	1.9	-2.4	72.89
	Min	Cent	-6.8	0.3	-1.6	0.4	-6.8	-85.34
		117	-5.4	-0.2	-1.4	0.2	-5.8	-75.52
		118	-9.3	-0.3	-1.7	-0.0	-9.3	-86.02
		125	-9.4	0.0	-1.7	0.4	-9.4	-85.99
		124	-4.9	1.0	-1.4	1.1	-4.9	-85.17

		NODE	Vxx	Vyy
	Max	Cent	9.2	-0.8
		117	12.9	-1.4
		118	12.9	-0.1
		125	8.4	-0.1
		124	8.4	-1.4
	Min	Cent	1.1	-2.0
		117	-1.5	-2.7
		118	-1.5	-1.5
		125	2.1	-1.5
		124	2.1	-2.7

LC		NODE	Fxx	Fyy	Fxy	Fmax	Fmin	ANGLE
RC ENV~2	Max	Cent	0.2	0.1	0.1	0.2	0.1	39.50
		117	0.1	0.3	0.1	0.3	0.1	74.53
		118	0.1	0.0	0.1	0.2	-0.0	19.20
		125	0.2	0.0	0.1	0.2	-0.0	17.46
		124	0.2	0.3	0.1	0.3	0.2	57.57
	Min	Cent	-0.2	0.0	0.0	0.0	-0.2	82.71
		117	-0.4	0.0	0.0	0.0	-0.4	85.74
		118	-0.4	-0.0	0.0	0.0	-0.4	83.28
		125	-0.0	-0.0	0.0	0.0	-0.1	67.75
		124	-0.0	0.0	0.0	0.0	-0.1	70.50

		NODE	Mxx	Myy	Mxy	Mmax	Mmin	ANGLE
	Max	Cent	-4.3	0.5	-0.1	0.5	-4.4	-88.24
		117	-2.6	0.3	-0.1	0.4	-2.6	-85.97
		118	-5.8	0.0	-0.3	0.1	-5.8	-87.37
		125	-5.8	0.5	-0.2	0.5	-5.8	-87.52
		124	-3.2	1.3	0.0	1.3	-3.2	89.90
	Min	Cent	-5.1	0.5	-0.4	0.5	-5.1	-87.28
		117	-2.9	0.3	-0.3	0.3	-2.9	-87.53
		118	-6.9	-0.0	-0.4	0.0	-6.9	-86.87
		125	-7.0	0.3	-0.4	0.3	-7.0	-87.26
		124	-3.7	1.2	-0.3	1.2	-3.7	-86.87

		NODE	Vxx	Vyy
	Max	Cent	6.8	-1.2
		117	7.4	-1.9
		118	7.4	-0.6
		125	6.2	-0.6
		124	6.2	-1.9
	Min	Cent	4.9	-1.4
		117	5.6	-2.1

```
                                    118        5.6       -0.8
                                    125        4.0       -0.8
                                    124        4.0       -2.1

  ELEM   MAT    SEC        LC        NODE        Fxx        Fyy        Fxy       Fmax       Fmin      ANGLE
------ ------ ------ -------- ---- ------ ---------- ---------- ---------- ---------- ---------- ----------
    98      1      1       SX (RS)   Cent        1.5        0.0        0.1        1.5        0.0       5.69
                                     118        1.7        0.1        0.1        1.7        0.1       5.18
                                     119        1.7        0.1        0.1        1.7        0.1       5.21
                                     126        1.3        0.1        0.1        1.3        0.1       6.98
                                     125        1.3        0.1        0.1        1.3        0.1       6.95

                                    NODE        Mxx        Myy        Mxy       Mmax       Mmin      ANGLE
                                ---- ------ ---------- ---------- ---------- ---------- ---------- ----------
                                    Cent        1.8        0.1        0.2        1.8        0.0       5.96
                                     118        1.3        0.1        0.1        1.3        0.0       6.58
                                     119        2.3        0.0        0.2        2.3        0.0       4.20
                                     126        2.4        0.1        0.2        2.4        0.1       5.23
                                     125        1.2        0.1        0.2        1.2        0.1       9.61

                                    NODE        Vxx        Vyy
                                ---- ------ ---------- ----------
                                    Cent        2.0        0.2
                                     118        1.9        0.2
                                     119        1.9        0.2
                                     126        2.1        0.2
                                     125        2.1        0.2

                          LC        NODE        Fxx        Fyy        Fxy       Fmax       Fmin      ANGLE
                    -------- ---- ------ ---------- ---------- ---------- ---------- ---------- ----------
                          SY (RS)   Cent        2.7        0.2        0.2        2.8        0.2       4.13
                                     118        3.3        0.2        0.2        3.3        0.2       3.46
                                     119        3.3        0.1        0.2        3.3        0.1       3.36
                                     126        2.2        0.1        0.2        2.3        0.1       5.01
                                     125        2.2        0.2        0.2        2.3        0.2       5.25

                                    NODE        Mxx        Myy        Mxy       Mmax       Mmin      ANGLE
                                ---- ------ ---------- ---------- ---------- ---------- ---------- ----------
                                    Cent        1.5        0.3        1.3        2.4       -0.5      33.06
                                     118        2.0        0.2        1.3        2.7       -0.5      27.99
                                     119        2.4        0.3        1.3        3.0       -0.3      25.12
                                     126        1.5        0.6        1.2        2.4       -0.3      34.49
                                     125        1.3        0.5        1.3        2.2       -0.5      36.67

                                    NODE        Vxx        Vyy
                                ---- ------ ---------- ----------
                                    Cent        2.7        0.8
                                     118        5.3        0.7
                                     119        5.3        0.9
                                     126        0.4        0.9
                                     125        0.4        0.7

                          LC        NODE        Fxx        Fyy        Fxy       Fmax       Fmin      ANGLE
                    -------- ---- ------ ---------- ---------- ---------- ---------- ---------- ----------
                    RC ENV~1  Max   Cent        2.6        0.2        0.2        2.6        0.2       4.19
                                     118        3.1        0.2        0.2        3.1        0.2       3.63
                                     119        3.1        0.2        0.2        3.1        0.1       3.53
                                     126        2.3        0.2        0.2        2.3        0.1       4.84
                                     125        2.3        0.2        0.2        2.3        0.2       5.02
                               Min   Cent       -2.8       -0.2       -0.2       -0.2       -2.9     -85.91
                                     118       -3.5       -0.2       -0.2       -0.2       -3.5     -86.68
                                     119       -3.5       -0.1       -0.2       -0.1       -3.5     -86.79
                                     126       -2.2       -0.1       -0.2       -0.1       -2.2     -84.81
                                     125       -2.2       -0.2       -0.2       -0.2       -2.2     -84.51

                                    NODE        Mxx        Myy        Mxy       Mmax       Mmin      ANGLE
                                ---- ------ ---------- ---------- ---------- ---------- ---------- ----------
                               Max   Cent       -4.2        0.5        0.8        0.7       -4.2      80.98
                                     118       -3.2        0.4        0.9        0.6       -3.4      77.06
                                     119       -4.3        0.3        0.7        0.4       -4.4      80.99
                                     126       -3.8        0.9        0.7        0.9       -3.9      82.84
                                     125       -4.5        1.0        0.8        1.1       -4.6      81.61
                               Min   Cent      -10.0       -0.1       -1.8        0.2      -10.0     -87.09
                                     118       -8.7       -0.1       -1.8        0.2       -8.7     -84.78
                                     119      -11.3       -0.4       -1.8       -0.1      -11.3     -87.27
                                     126      -10.7       -0.3       -1.8        0.1      -10.7     -87.33
```

125	-9.3	-0.0	-1.8	0.4	-9.3	-84.96

	NODE	Vxx	Vyy
Max	Cent	4.4	0.2
	118	8.0	-0.1
	119	8.0	0.4
	126	2.7	0.4
	125	2.7	-0.1
Min	Cent	-1.1	-1.5
	118	-2.7	-1.5
	119	-2.7	-1.4
	126	-1.4	-1.4
	125	-1.4	-1.5

LC		NODE	Fxx	Fyy	Fxy	Fmax	Fmin	ANGLE
RC ENV~2	Max	Cent	0.3	0.0	0.0	0.3	0.0	-5.38
		118	0.3	0.0	0.0	0.3	0.0	-7.35
		119	0.3	0.0	0.0	0.3	-0.0	-6.32
		126	0.4	0.0	0.0	0.4	0.0	-4.24
		125	0.4	0.0	0.0	0.4	0.0	-4.59
	Min	Cent	-0.5	0.0	-0.0	0.0	-0.5	89.69
		118	-0.7	-0.0	-0.0	-0.0	-0.7	88.95
		119	-0.7	-0.0	-0.0	0.0	-0.7	-86.39
		126	-0.3	-0.0	-0.0	0.0	-0.3	-88.74
		125	-0.3	-0.0	-0.0	-0.0	-0.3	87.37

	NODE	Mxx	Myy	Mxy	Mmax	Mmin	ANGLE
Max	Cent	-5.9	0.2	-0.4	0.3	-5.9	-84.21
	118	-5.1	0.2	-0.4	0.2	-5.2	-84.00
	119	-6.6	-0.1	-0.4	-0.0	-6.6	-85.39
	126	-6.0	0.3	-0.4	0.4	-6.1	-84.20
	125	-5.8	0.5	-0.4	0.5	-5.8	-85.94
Min	Cent	-7.4	0.1	-0.6	0.1	-7.4	-86.91
	118	-6.4	0.1	-0.6	0.1	-6.5	-86.61
	119	-8.4	-0.1	-0.6	-0.1	-8.4	-87.10
	126	-7.9	0.1	-0.6	0.1	-7.9	-87.14
	125	-6.9	0.3	-0.6	0.4	-7.0	-86.16

	NODE	Vxx	Vyy
Max	Cent	2.5	-0.4
	118	3.5	-0.6
	119	3.5	-0.2
	126	1.6	-0.2
	125	1.6	-0.6
Min	Cent	1.3	-0.7
	118	2.5	-0.8
	119	2.5	-0.5
	126	0.1	-0.5
	125	0.1	-0.8

ELEM	MAT	SEC	LC		NODE	Fxx	Fyy	Fxy	Fmax	Fmin	ANGLE
99	1	1	SX (RS)		Cent	2.0	0.0	0.1	2.0	0.0	2.72
					119	2.2	0.0	0.1	2.2	0.0	2.46
					120	2.2	0.1	0.1	2.2	0.1	2.53
					127	1.8	0.1	0.1	1.8	0.1	3.15
					126	1.8	0.0	0.1	1.8	0.0	3.05

	NODE	Mxx	Myy	Mxy	Mmax	Mmin	ANGLE
	Cent	3.0	0.1	0.3	3.0	0.1	5.97
	119	2.6	0.1	0.2	2.6	0.1	5.48
	120	3.4	0.0	0.3	3.4	0.0	5.01
	127	3.5	0.3	0.3	3.5	0.3	5.90
	126	2.4	0.1	0.3	2.4	0.1	6.99

	NODE	Vxx	Vyy
	Cent	1.7	0.3
	119	1.6	0.2
	120	1.6	0.5
	127	2.0	0.5
	126	2.0	0.2

LC		NODE	Fxx	Fyy	Fxy	Fmax	Fmin	ANGLE
SY (RS)		Cent	2.4	0.2	0.2	2.4	0.2	5.07
		119	3.0	0.1	0.2	3.0	0.1	3.94
		120	3.0	0.2	0.2	3.0	0.2	4.11
		127	1.9	0.2	0.2	1.9	0.2	6.93
		126	1.9	0.1	0.2	1.9	0.1	6.46

		NODE	Mxx	Myy	Mxy	Mmax	Mmin	ANGLE
		Cent	1.6	0.3	1.2	2.3	-0.4	30.83
		119	2.1	0.2	1.2	2.7	-0.3	25.59
		120	2.2	0.3	1.1	2.7	-0.2	24.81
		127	1.5	0.5	1.1	2.2	-0.2	33.72
		126	1.5	0.6	1.1	2.3	-0.2	33.73

		NODE	Vxx	Vyy
		Cent	2.0	0.9
		119	4.4	0.9
		120	4.4	0.8
		127	0.4	0.8
		126	0.4	0.9

LC		NODE	Fxx	Fyy	Fxy	Fmax	Fmin	ANGLE
RC ENV~1	Max	Cent	2.4	0.2	0.2	2.4	0.2	4.38
		119	2.8	0.1	0.2	2.8	0.1	3.58
		120	2.8	0.2	0.2	2.8	0.2	3.68
		127	2.0	0.2	0.2	2.0	0.2	5.51
		126	2.0	0.1	0.2	2.0	0.1	5.28
	Min	Cent	-2.5	-0.2	-0.2	-0.1	-2.5	-84.28
		119	-3.2	-0.1	-0.2	-0.1	-3.3	-85.76
		120	-3.2	-0.3	-0.2	-0.2	-3.3	-85.52
		127	-1.8	-0.3	-0.2	-0.2	-1.8	-81.50
		126	-1.8	-0.1	-0.2	-0.1	-1.8	-82.31

		NODE	Mxx	Myy	Mxy	Mmax	Mmin	ANGLE
	Max	Cent	-2.5	0.6	0.6	0.6	-2.6	82.71
		119	-3.1	0.4	0.6	0.5	-3.1	80.89
		120	-1.9	0.2	0.6	0.3	-1.9	80.36
		127	-1.1	1.1	0.5	1.1	-1.2	83.79
		126	-4.0	0.9	0.5	0.9	-4.0	84.58
	Min	Cent	-9.9	-0.1	-1.8	0.1	-9.9	-87.13
		119	-10.3	-0.1	-1.7	0.1	-10.3	-87.60
		120	-9.6	-0.4	-1.7	-0.1	-9.6	-86.88
		127	-8.9	0.0	-1.8	0.3	-9.0	-83.45
		126	-10.8	-0.3	-1.7	0.0	-10.9	-77.62

		NODE	Vxx	Vyy
	Max	Cent	0.2	0.2
		119	3.7	0.4
		120	3.7	-0.1
		127	-0.9	-0.1
		126	-0.9	0.4
	Min	Cent	-3.9	-1.6
		119	-5.1	-1.4
		120	-5.1	-1.8
		127	-5.0	-1.8
		126	-5.0	-1.4

LC		NODE	Fxx	Fyy	Fxy	Fmax	Fmin	ANGLE
RC ENV~2	Max	Cent	0.6	0.0	-0.0	0.6	-0.0	-4.94
		119	0.5	0.0	-0.0	0.5	0.0	-5.11
		120	0.5	0.0	-0.0	0.5	-0.0	-4.29
		127	0.7	0.0	-0.0	0.7	-0.0	-3.91
		126	0.7	0.0	-0.0	0.7	0.0	-4.54
	Min	Cent	-0.6	-0.0	-0.1	0.0	-0.6	-85.78
		119	-0.8	0.0	-0.1	0.0	-0.8	-88.37
		120	-0.8	-0.1	-0.1	-0.0	-0.8	-74.77
		127	-0.5	-0.1	-0.1	-0.0	-0.5	-75.39
		126	-0.5	0.0	-0.1	0.0	-0.5	-87.23

	NODE	Mxx	Myy	Mxy	Mmax	Mmin	ANGLE
Max	Cent	-5.1	0.2	-0.4	0.3	-5.2	-82.17
	119	-5.3	0.2	-0.4	0.2	-5.4	-83.47
	120	-4.8	-0.1	-0.4	-0.0	-4.9	-81.74
	127	-4.0	0.6	-0.4	0.7	-4.2	-80.62
	126	-6.2	0.3	-0.4	0.3	-6.3	-83.59
Min	Cent	-7.3	0.1	-0.7	0.1	-7.3	-86.81
	119	-7.6	0.1	-0.6	0.1	-7.6	-87.34
	120	-7.1	-0.1	-0.7	-0.1	-7.1	-86.58
	127	-6.5	0.3	-0.8	0.4	-6.6	-86.43
	126	-8.0	0.1	-0.7	0.1	-8.1	-87.02

	NODE	Vxx	Vyy
Max	Cent	-1.3	-0.4
	119	-0.3	-0.2
	120	-0.3	-0.6
	127	-2.3	-0.6
	126	-2.3	-0.2
Min	Cent	-2.5	-0.8
	119	-1.5	-0.5
	120	-1.5	-1.0
	127	-3.7	-1.0
	126	-3.7	-0.5

ELEM	MAT	SEC	LC	NODE	Fxx	Fyy	Fxy	Fmax	Fmin	ANGLE
100	1	1	SX (RS)	Cent	2.4	0.3	0.2	2.4	0.3	4.70
				120	2.3	0.0	0.2	2.3	0.0	4.34
				121	2.3	0.5	0.2	2.3	0.5	5.54
				128	2.4	0.5	0.2	2.5	0.5	5.13
				127	2.4	0.0	0.2	2.4	0.0	4.08

	NODE	Mxx	Myy	Mxy	Mmax	Mmin	ANGLE
	Cent	4.1	0.2	0.5	4.2	0.1	7.44
	120	4.0	0.2	0.4	4.0	0.1	6.04
	121	4.4	0.0	0.5	4.5	-0.0	6.56
	128	4.6	0.3	0.6	4.7	0.2	7.78
	127	3.4	0.3	0.5	3.5	0.2	8.81

	NODE	Vxx	Vyy
	Cent	1.5	0.5
	120	1.1	0.5
	121	1.1	0.5
	128	2.1	0.5
	127	2.1	0.5

LC	NODE	Fxx	Fyy	Fxy	Fmax	Fmin	ANGLE
SY (RS)	Cent	1.9	0.1	0.4	2.0	0.0	12.07
	120	2.4	0.2	0.4	2.5	0.1	9.52
	121	2.4	0.3	0.4	2.5	0.2	9.92
	128	1.4	0.3	0.4	1.5	0.1	17.79
	127	1.4	0.2	0.4	1.5	0.0	16.64

	NODE	Mxx	Myy	Mxy	Mmax	Mmin	ANGLE
	Cent	1.4	0.3	1.1	2.1	-0.4	31.51
	120	2.2	0.3	1.1	2.7	-0.2	24.36
	121	1.8	0.3	1.1	2.3	-0.3	27.50
	128	1.2	0.4	1.0	2.0	-0.3	34.37
	127	1.5	0.6	1.1	2.2	-0.2	33.09

	NODE	Vxx	Vyy
	Cent	2.2	0.8
	120	4.6	0.8
	121	4.6	0.7
	128	0.5	0.7
	127	0.5	0.8

LC	NODE	Fxx	Fyy	Fxy	Fmax	Fmin	ANGLE

LC		NODE	Fxx	Fyy	Fxy	Fmax	Fmin	ANGLE
RC ENV~1	Max	Cent	2.4	0.3	0.3	2.4	0.3	2.71
		120	2.3	0.2	0.3	2.4	0.1	8.21
		121	2.3	0.6	0.3	2.4	0.6	9.05
		128	2.7	0.6	0.3	2.7	0.6	2.80
		127	2.7	0.2	0.3	2.7	0.1	2.15
	Min	Cent	-2.3	-0.2	-0.5	-0.2	-2.3	-83.35
		120	-2.5	-0.2	-0.5	-0.1	-2.6	-79.32
		121	-2.5	-0.4	-0.5	-0.4	-2.6	-83.05
		128	-2.2	-0.4	-0.5	-0.4	-2.2	-82.35
		127	-2.2	-0.2	-0.5	0.0	-2.2	-83.64

		NODE	Mxx	Myy	Mxy	Mmax	Mmin	ANGLE
	Max	Cent	0.9	0.7	0.5	1.0	0.5	-17.76
		120	-0.1	0.4	0.6	0.5	-0.2	77.20
		121	2.1	0.2	0.5	2.1	-0.0	-1.19
		128	3.1	1.4	0.3	3.1	1.2	-3.84
		127	-1.3	1.1	0.4	1.1	-1.3	84.88
	Min	Cent	-7.3	0.1	-1.8	0.4	-7.4	-81.25
		120	-8.7	-0.1	-1.6	0.0	-8.7	-87.94
		121	-6.7	-0.4	-1.6	-0.1	-6.8	-84.28
		128	-6.1	0.5	-1.8	0.9	-6.4	-79.34
		127	-8.9	-0.0	-1.8	0.4	-8.9	-81.99

		NODE	Vxx	Vyy
	Max	Cent	-2.3	-0.5
		120	1.1	-0.1
		121	1.1	-0.9
		128	-3.4	-0.9
		127	-3.4	-0.1
	Min	Cent	-8.0	-2.1
		120	-8.0	-1.8
		121	-8.0	-2.4
		128	-9.2	-2.4
		127	-9.2	-1.8

LC		NODE	Fxx	Fyy	Fxy	Fmax	Fmin	ANGLE
RC ENV~2	Max	Cent	0.9	0.2	0.0	0.9	0.0	-0.10
		120	0.6	0.0	0.0	0.6	-0.0	1.58
		121	0.6	0.3	0.0	0.6	0.0	1.34
		128	1.1	0.3	0.0	1.1	0.1	-0.07
		127	1.1	0.0	0.0	1.1	-0.0	-0.08
	Min	Cent	-0.7	-0.1	-0.2	0.1	-0.7	-67.13
		120	-0.8	-0.0	-0.2	0.0	-0.8	-76.41
		121	-0.8	-0.1	-0.2	0.1	-0.8	-56.24
		128	-0.6	-0.1	-0.2	0.2	-0.6	-59.55
		127	-0.6	-0.0	-0.2	0.0	-0.6	-76.53

		NODE	Mxx	Myy	Mxy	Mmax	Mmin	ANGLE
	Max	Cent	-2.2	0.4	-0.4	0.7	-2.5	-73.54
		120	-3.3	0.2	-0.3	0.3	-3.4	-79.01
		121	-1.2	-0.0	-0.3	0.3	-1.6	-62.97
		128	-0.3	1.1	-0.4	1.6	-0.8	-62.91
		127	-4.1	0.6	-0.4	0.8	-4.3	-79.55
	Min	Cent	-5.1	0.3	-0.9	0.3	-5.1	-85.62
		120	-6.3	0.0	-0.7	0.0	-6.3	-87.50
		121	-4.0	-0.1	-0.8	-0.0	-4.1	-83.65
		128	-3.5	0.8	-1.0	0.9	-3.5	-84.05
		127	-6.5	0.3	-0.9	0.4	-6.6	-86.48

		NODE	Vxx	Vyy
	Max	Cent	-4.2	-1.0
		120	-3.3	-0.6
		121	-3.3	-1.4
		128	-5.1	-1.4
		127	-5.1	-0.6
	Min	Cent	-5.9	-1.4
		120	-5.1	-1.0
		121	-5.1	-1.8
		128	-6.9	-1.8
		127	-6.9	-1.0

ELEM	MAT	SEC	LC		NODE	Fxx	Fyy	Fxy	Fmax	Fmin	ANGLE
101	1	1	SX	(RS)	Cent	2.2	0.0	0.7	2.4	-0.2	16.31
					121	1.1	0.5	0.7	1.6	0.1	34.52
					122	1.1	0.6	0.7	1.6	0.1	35.77
					129	3.5	0.6	0.7	3.6	0.5	13.10
					128	3.5	0.5	0.7	3.6	0.4	12.83

		NODE	Mxx	Myy	Mxy	Mmax	Mmin	ANGLE
		Cent	4.9	0.4	0.6	5.0	0.3	7.38
		121	5.2	0.2	0.7	5.3	0.1	7.66
		122	4.0	0.3	0.5	4.0	0.2	7.57
		129	5.9	1.3	0.4	6.0	1.3	5.03
		128	4.6	0.3	0.6	4.7	0.2	7.67

		NODE	Vxx	Vyy
		Cent	0.4	1.4
		121	2.5	0.5
		122	2.5	2.2
		129	2.1	2.2
		128	2.1	0.5

LC		NODE	Fxx	Fyy	Fxy	Fmax	Fmin	ANGLE
SY	(RS)	Cent	0.8	0.1	1.0	1.6	-0.6	35.04
		121	0.3	0.5	1.0	1.4	-0.7	47.90
		122	0.3	0.5	1.0	1.4	-0.6	49.09
		129	1.4	0.5	1.0	2.1	-0.1	33.21
		128	1.4	0.5	1.0	2.1	-0.2	32.21

		NODE	Mxx	Myy	Mxy	Mmax	Mmin	ANGLE
		Cent	0.8	0.2	0.9	1.5	-0.4	36.27
		121	1.4	0.1	0.9	1.8	-0.3	26.41
		122	1.8	0.3	0.8	2.1	-0.1	24.36
		129	1.2	0.9	0.9	2.0	0.1	41.24
		128	1.4	0.5	1.0	2.0	-0.1	32.05

		NODE	Vxx	Vyy
		Cent	3.8	0.5
		121	4.6	0.7
		122	4.6	1.3
		129	3.3	1.3
		128	3.3	0.7

LC		NODE	Fxx	Fyy	Fxy	Fmax	Fmin	ANGLE
RC ENV~1	Max	Cent	2.5	0.2	0.8	2.6	0.1	10.15
		121	1.5	0.7	0.8	1.7	0.5	24.47
		122	1.5	0.6	0.8	1.7	0.4	22.03
		129	3.6	0.6	0.8	3.7	0.5	8.13
		128	3.6	0.7	0.8	3.7	0.6	8.51
	Min	Cent	-1.9	-0.0	-1.3	0.4	-2.3	-67.87
		121	-0.7	-0.4	-1.3	0.4	-1.5	-49.37
		122	-0.7	-0.7	-1.3	0.3	-1.6	-45.14
		129	-3.3	-0.7	-1.3	-0.4	-3.6	-72.00
		128	-3.3	-0.4	-1.3	-0.1	-3.6	-73.37

		NODE	Mxx	Myy	Mxy	Mmax	Mmin	ANGLE
	Max	Cent	5.3	1.1	0.2	5.3	1.0	-0.95
		121	4.2	0.3	0.3	4.2	0.3	2.00
		122	5.3	0.0	0.3	5.3	0.0	-0.15
		129	8.5	3.3	0.3	8.6	3.1	-3.00
		128	3.0	1.4	0.2	3.0	1.2	-4.79
	Min	Cent	-4.6	0.3	-1.6	0.6	-4.9	-76.23
		121	-6.2	-0.0	-1.4	0.2	-6.5	-86.54
		122	-2.7	-0.6	-1.4	-0.2	-3.1	-68.23
		129	-3.3	0.4	-1.6	0.7	-3.6	-74.82
		128	-6.2	0.5	-1.7	0.9	-6.4	-79.32

		NODE	Vxx	Vyy
	Max	Cent	-1.9	-1.1

		121	0.4	-0.9
		122	0.4	-1.0
		129	-3.9	-1.0
		128	-3.9	-0.9
	Min	Cent	-10.6	-4.1
		121	-9.4	-2.4
		122	-9.4	-5.9
		129	-12.9	-5.9
		128	-12.9	-2.4

LC		NODE	Fxx	Fyy	Fxy	Fmax	Fmin	ANGLE
RC ENV~2	Max	Cent	1.1	0.1	0.1	1.1	0.1	0.73
		121	0.8	0.4	0.1	1.0	0.1	-39.99
		122	0.8	0.2	0.1	0.8	0.2	-27.05
		129	1.5	0.2	0.1	1.5	0.2	0.57
		128	1.5	0.4	0.1	1.5	0.1	0.48
	Min	Cent	-0.4	0.0	-0.6	0.3	-0.8	-51.15
		121	0.2	-0.1	-0.6	0.5	-0.2	-1.84
		122	0.2	-0.3	-0.6	0.5	-0.6	-21.48
		129	-1.1	-0.3	-0.6	-0.0	-1.3	-63.22
		128	-1.1	-0.1	-0.6	0.4	-1.2	-38.21

		NODE	Mxx	Myy	Mxy	Mmax	Mmin	ANGLE
	Max	Cent	1.8	0.8	-0.4	2.4	0.3	-30.47
		121	0.5	0.2	-0.3	1.2	-0.5	-40.42
		122	2.8	-0.2	-0.3	2.9	-0.3	-11.29
		129	4.8	2.4	-0.5	5.0	2.2	-17.73
		128	-0.4	1.1	-0.5	1.6	-0.9	-63.04
	Min	Cent	-1.5	0.5	-0.9	0.6	-1.6	-78.41
		121	-3.2	0.1	-0.8	0.1	-3.2	-85.50
		122	-0.0	-0.4	-0.7	0.3	-0.6	-39.12
		129	0.6	1.3	-0.9	1.7	0.2	-59.66
		128	-3.5	0.8	-1.0	0.9	-3.6	-83.43

		NODE	Vxx	Vyy
	Max	Cent	-5.7	-2.0
		121	-4.0	-1.4
		122	-4.0	-2.5
		129	-6.7	-2.5
		128	-6.7	-1.4
	Min	Cent	-7.8	-3.1
		121	-6.8	-1.8
		122	-6.8	-4.4
		129	-9.5	-4.4
		128	-9.5	-1.8

ELEM	MAT	SEC	LC		NODE	Fxx	Fyy	Fxy	Fmax	Fmin	ANGLE
102	1	1	SX (RS)		Cent	1.0	0.1	0.3	1.0	0.1	16.15
					122	1.8	0.4	0.3	1.8	0.3	10.22
					30	1.8	0.1	0.3	1.8	0.0	8.60
					47	0.3	0.1	0.3	0.5	-0.1	32.78
					129	0.3	0.4	0.3	0.6	0.1	47.60

		NODE	Mxx	Myy	Mxy	Mmax	Mmin	ANGLE
		Cent	2.8	0.1	0.3	2.8	0.1	6.06
		122	4.0	0.3	0.5	4.1	0.2	7.50
		30	4.4	0.5	0.9	4.6	0.3	11.71
		47	3.7	1.3	0.9	4.0	1.0	17.91
		129	6.1	1.4	0.5	6.1	1.3	6.02

		NODE	Vxx	Vyy
		Cent	8.0	1.0
		122	0.8	2.2
		30	0.8	0.3
		47	16.3	0.3
		129	16.3	2.2

LC		NODE	Fxx	Fyy	Fxy	Fmax	Fmin	ANGLE
SY (RS)		Cent	1.0	0.6	0.7	1.5	0.1	37.97

		122	1.4	0.2	0.7	1.7	-0.1	25.35
		30	1.4	1.0	0.7	1.9	0.5	38.57
		47	0.6	1.0	0.7	1.6	0.1	53.82
		129	0.6	0.2	0.7	1.1	-0.3	37.39

		NODE	Mxx	Myy	Mxy	Mmax	Mmin	ANGLE
		Cent	1.5	0.5	0.6	1.8	0.3	24.41
		122	0.8	0.1	0.7	1.2	-0.3	32.52
		30	2.4	0.2	0.5	2.5	0.1	11.95
		47	2.8	1.4	0.4	2.9	1.3	16.29
		129	0.8	0.7	0.6	1.4	0.1	43.72

		NODE	Vxx	Vyy
		Cent	3.8	1.9
		122	3.0	1.3
		30	3.0	2.6
		47	5.0	2.6
		129	5.0	1.3

LC		NODE	Fxx	Fyy	Fxy	Fmax	Fmin	ANGLE
RC ENV~1	Max	Cent	1.7	0.5	0.5	1.9	0.3	20.44
		122	2.7	0.4	0.5	2.7	0.4	1.60
		30	2.7	0.7	0.5	2.7	0.6	1.26
		47	1.0	0.7	0.5	1.4	0.3	37.00
		129	1.0	0.4	0.5	1.3	0.4	26.27
	Min	Cent	-0.3	-0.8	-0.9	0.2	-1.5	-44.45
		122	-0.8	-0.3	-0.9	-0.1	-1.2	-58.59
		30	-0.8	-1.4	-0.9	-0.1	-1.9	-57.02
		47	-0.2	-1.4	-0.9	0.3	-1.8	-28.22
		129	-0.2	-0.3	-0.9	0.4	-1.1	-31.75

		NODE	Mxx	Myy	Mxy	Mmax	Mmin	ANGLE
	Max	Cent	6.5	1.3	0.4	6.5	1.2	-2.50
		122	6.1	0.2	0.4	6.1	0.1	2.39
		30	7.7	0.1	1.0	7.8	-0.1	7.18
		47	9.5	3.0	0.7	9.5	3.0	2.63
		129	8.9	3.4	0.1	8.9	3.4	0.07
	Min	Cent	0.5	0.2	-0.8	1.1	-0.1	-48.55
		122	-1.9	-0.4	-0.9	-0.1	-2.2	-67.82
		30	-1.2	-0.9	-0.7	-0.3	-1.8	-50.90
		47	1.3	0.2	-1.0	2.0	-0.3	-31.60
		129	-3.2	0.5	-1.1	0.7	-3.5	-75.79

		NODE	Vxx	Vyy
	Max	Cent	4.8	-1.2
		122	0.8	-1.0
		30	0.8	-0.4
		47	12.3	-0.4
		129	12.3	-1.0
	Min	Cent	-11.1	-5.3
		122	-5.5	-5.9
		30	-5.5	-5.6
		47	-20.3	-5.6
		129	-20.3	-5.9

LC		NODE	Fxx	Fyy	Fxy	Fmax	Fmin	ANGLE
RC ENV~2	Max	Cent	1.2	-0.1	-0.1	1.2	-0.1	-8.57
		122	1.7	0.2	-0.1	1.7	0.2	-7.19
		30	1.7	-0.2	-0.1	1.7	-0.3	-5.30
		47	0.7	-0.2	-0.1	0.8	-0.3	-15.20
		129	0.7	0.2	-0.1	0.8	0.2	-20.94
	Min	Cent	0.4	-0.2	-0.3	0.5	-0.3	-20.71
		122	0.4	-0.1	-0.3	0.5	-0.2	-23.73
		30	0.4	-0.5	-0.3	0.5	-0.5	-20.13
		47	0.3	-0.5	-0.3	0.3	-0.5	-5.77
		129	0.3	-0.1	-0.3	0.3	-0.2	-20.86

		NODE	Mxx	Myy	Mxy	Mmax	Mmin	ANGLE
	Max	Cent	4.8	0.9	-0.1	4.8	0.9	-2.65
		122	3.6	-0.0	-0.1	3.6	-0.1	-1.37

		30	5.4	-0.3	0.5	5.4	-0.3	-0.43
		47	7.0	2.2	0.2	7.0	2.1	2.22
		129	5.2	2.5	-0.4	5.3	2.5	-8.51
	Min	Cent	2.4	0.7	-0.3	2.4	0.7	-6.31
		122	0.7	-0.2	-0.4	0.9	-0.2	-19.51
		30	1.9	-0.6	-0.2	1.9	-0.7	9.17
		47	4.3	1.2	-0.4	4.4	1.2	-7.94
		129	0.9	1.4	-0.6	1.8	0.5	-54.88

		NODE	Vxx	Vyy
	Max	Cent	-0.9	-2.7
		122	-2.2	-2.5
		30	-2.2	-3.0
		47	0.9	-3.0
		129	0.9	-2.5
	Min	Cent	-6.5	-3.9
		122	-3.9	-4.4
		30	-3.9	-3.6
		47	-10.1	-3.6
		129	-10.1	-4.4

ELEM	MAT	SEC	LC		NODE	Fxx	Fyy	Fxy	Fmax	Fmin	ANGLE
103	1	1	SX	(RS)	Cent	2.5	0.1	1.2	3.0	-0.4	22.36
					108	0.9	0.5	1.2	1.9	-0.5	40.41
					123	0.9	0.4	1.2	1.9	-0.6	39.09
					130	5.8	0.4	1.2	6.1	0.1	11.88
					6	5.8	0.5	1.2	6.1	0.2	12.11

	NODE	Mxx	Myy	Mxy	Mmax	Mmin	ANGLE
	Cent	4.6	1.2	0.9	4.8	0.9	14.61
	108	3.7	0.7	3.6	6.1	-1.6	33.61
	123	1.8	0.2	0.8	2.2	-0.1	22.88
	130	2.1	2.0	1.0	3.1	1.0	42.93
	6	18.0	3.6	3.4	18.7	2.9	12.49

	NODE	Vxx	Vyy
	Cent	9.1	1.9
	108	9.8	0.0
	123	9.8	3.8
	130	27.9	3.8
	6	27.9	0.0

LC		NODE	Fxx	Fyy	Fxy	Fmax	Fmin	ANGLE
SY	(RS)	Cent	2.5	3.4	3.4	6.3	-0.4	48.85
		108	3.4	9.3	3.4	10.8	1.9	65.64
		123	3.4	2.5	3.4	6.3	-0.4	41.20
		130	2.0	2.5	3.4	5.6	-1.1	47.42
		6	2.0	9.3	3.4	10.6	0.7	68.81

	NODE	Mxx	Myy	Mxy	Mmax	Mmin	ANGLE
	Cent	5.7	8.9	2.4	10.2	4.5	61.91
	108	8.2	3.3	1.6	8.7	2.8	17.01
	123	2.7	3.0	1.0	3.9	1.8	49.84
	130	1.2	8.5	7.9	13.5	-3.8	57.53
	6	12.6	37.9	7.2	39.8	10.7	75.16

	NODE	Vxx	Vyy
	Cent	8.5	20.6
	108	10.2	61.0
	123	10.2	19.9
	130	6.8	19.9
	6	6.8	61.0

LC		NODE	Fxx	Fyy	Fxy	Fmax	Fmin	ANGLE
RC ENV~1	Max	Cent	2.5	2.8	4.0	6.7	-0.7	46.08
		108	3.7	7.5	4.0	10.0	1.1	57.56
		123	3.7	3.2	4.0	7.5	-0.1	43.27
		130	5.6	3.2	4.0	6.6	0.7	50.11

		6	5.6	7.5	4.0	9.5	-0.4	62.69
	Min	Cent	-2.5	-4.0	-2.7	-0.5	-6.0	-75.39
		108	-3.2	-11.1	-2.7	-2.3	-11.9	-16.85
		123	-3.2	-1.9	-2.7	0.2	-5.2	-51.86
		130	-6.0	-1.9	-2.7	0.3	-6.1	-85.45
		6	-6.0	-11.1	-2.7	-2.3	-11.9	-82.35

		NODE	Mxx	Myy	Mxy	Mmax	Mmin	ANGLE
	Max	Cent	11.9	16.4	3.4	18.1	10.7	63.69
		108	13.5	3.3	4.8	14.2	2.5	14.92
		123	6.1	6.4	3.2	9.1	3.2	43.13
		130	1.0	13.9	7.7	17.3	0.8	66.04
		6	33.4	59.0	6.7	60.4	32.6	78.36
	Min	Cent	-0.3	-1.5	-1.4	0.6	-2.4	-33.20
		108	-3.0	-3.4	-2.3	-2.8	-3.6	-30.65
		123	-0.1	0.4	0.6	0.8	-0.5	54.97
		130	-3.3	-3.2	-8.0	3.6	-10.8	-80.13
		6	-2.8	-16.7	-7.7	5.3	-19.4	-19.26

		NODE	Vxx	Vyy
	Max	Cent	29.5	0.7
		108	16.1	26.2
		123	16.1	14.9
		130	51.6	14.9
		6	51.6	26.2
	Min	Cent	5.7	-40.4
		108	-4.3	-95.8
		123	-4.3	-24.8
		130	-4.2	-24.8
		6	-4.2	-95.8

LC		NODE	Fxx	Fyy	Fxy	Fmax	Fmin	ANGLE
RC ENV~2	Max	Cent	0.8	-0.5	1.3	0.9	-0.6	17.10
		108	0.6	-1.5	1.3	1.0	-1.6	17.95
		123	0.6	1.2	1.3	2.3	-0.1	51.22
		130	1.5	1.2	1.3	1.7	0.4	66.90
		6	1.5	-1.5	1.3	1.5	-1.5	5.16
	Min	Cent	-0.7	-1.0	0.3	0.3	-2.1	42.96
		108	0.1	-3.1	0.3	0.1	-3.6	9.51
		123	0.1	0.5	0.3	0.6	-0.5	63.95
		130	-2.0	0.5	0.3	0.9	-2.5	62.13
		6	-2.0	-3.1	0.3	-1.0	-3.9	38.32

		NODE	Mxx	Myy	Mxy	Mmax	Mmin	ANGLE
	Max	Cent	8.6	9.4	1.4	10.2	7.8	54.60
		108	8.1	-0.0	2.4	8.6	-0.3	14.18
		123	4.4	4.2	2.3	6.6	2.0	43.94
		130	-0.7	6.1	0.2	6.1	-0.7	88.20
		6	24.2	28.5	0.5	29.0	23.7	-72.94
	Min	Cent	4.4	7.2	0.8	7.8	3.9	68.87
		108	4.5	-0.7	0.3	4.5	-0.9	3.42
		123	2.2	3.4	1.3	4.4	1.4	58.52
		130	-2.0	4.9	-0.6	4.9	-2.1	-85.49
		6	10.8	20.4	-1.7	20.4	10.8	86.89

		NODE	Vxx	Vyy
	Max	Cent	21.5	-19.7
		108	9.8	-34.7
		123	9.8	-3.1
		130	37.1	-3.1
		6	37.1	-34.7
	Min	Cent	13.2	-25.4
		108	3.3	-46.6
		123	3.3	-6.2
		130	17.6	-6.2
		6	17.6	-46.6

ELEM	MAT	SEC	LC		NODE	Fxx	Fyy	Fxy	Fmax	Fmin	ANGLE
104	1	1	SX (RS)		Cent	1.0	0.4	0.4	1.2	0.2	28.35
					123	0.7	0.7	0.4	1.1	0.3	45.82
					124	0.7	0.2	0.4	0.9	-0.0	29.70

131	1.3	0.2	0.4	1.4	0.1	17.92
130	1.3	0.7	0.4	1.5	0.5	26.29

NODE	Mxx	Myy	Mxy	Mmax	Mmin	ANGLE
Cent	0.9	0.7	0.4	1.3	0.4	37.73
123	1.5	0.3	0.4	1.7	0.1	16.95
124	0.3	0.6	0.3	0.8	0.1	55.88
131	0.4	0.5	0.4	0.8	0.1	47.05
130	2.2	2.0	0.5	2.5	1.6	38.74

NODE	Vxx	Vyy
Cent	3.3	1.9
123	2.6	3.8
124	2.6	0.1
131	4.0	0.1
130	4.0	3.8

LC	NODE	Fxx	Fyy	Fxy	Fmax	Fmin	ANGLE
SY (RS)	Cent	2.4	1.3	1.3	3.2	0.5	33.70
	123	2.7	2.5	1.3	3.9	1.3	42.29
	124	2.7	0.3	1.3	3.3	-0.2	23.51
	131	2.1	0.3	1.3	2.7	-0.3	28.05
	130	2.1	2.5	1.3	3.6	1.0	49.68

NODE	Mxx	Myy	Mxy	Mmax	Mmin	ANGLE
Cent	1.8	1.3	1.6	3.2	-0.1	40.03
123	4.8	3.5	1.8	6.1	2.2	35.07
124	1.3	0.5	2.1	3.1	-1.3	39.12
131	1.3	0.6	1.0	2.0	-0.1	34.04
130	1.1	8.4	0.6	8.4	1.0	85.01

NODE	Vxx	Vyy
Cent	4.5	9.6
123	6.8	19.9
124	6.8	0.7
131	2.1	0.7
130	2.1	19.9

LC		NODE	Fxx	Fyy	Fxy	Fmax	Fmin	ANGLE
RC ENV~1	Max	Cent	2.4	1.7	1.5	3.6	0.5	38.64
		123	2.7	3.1	1.5	4.4	1.4	49.20
		124	2.7	0.5	1.5	3.4	-0.1	26.54
		131	2.1	0.5	1.5	3.0	0.1	30.77
		130	2.1	3.1	1.5	4.2	1.0	54.81
	Min	Cent	-2.4	-0.9	-1.1	-0.4	-2.9	-62.10
		123	-2.7	-1.8	-1.1	-1.1	-3.4	-56.62
		124	-2.7	-0.2	-1.1	-0.0	-3.1	-73.98
		131	-2.0	-0.2	-1.1	-0.0	-2.5	-81.06
		130	-2.0	-1.8	-1.1	-0.8	-3.0	-47.84

	NODE	Mxx	Myy	Mxy	Mmax	Mmin	ANGLE
Max	Cent	0.9	5.0	1.8	5.4	0.2	68.33
	123	6.9	6.8	2.4	9.2	4.4	44.40
	124	-1.9	2.6	2.3	3.2	-2.9	65.79
	131	-3.3	3.7	0.6	3.7	-3.4	-87.87
	130	4.5	14.4	0.7	14.5	4.4	86.27
Min	Cent	-2.8	2.1	-1.4	2.5	-3.1	-74.75
	123	-2.7	-0.2	-1.2	0.3	-3.2	-68.10
	124	-5.0	1.1	-2.0	1.1	-5.1	-87.79
	131	-7.0	2.1	-1.3	2.3	-7.0	-84.44
	130	-0.1	-2.4	-0.6	1.2	-2.5	-8.95

	NODE	Vxx	Vyy
Max	Cent	17.4	6.0
	123	16.4	14.9
	124	16.4	-1.6
	131	18.4	-1.6
	130	18.4	14.9
Min	Cent	5.5	-13.2

		123	2.1	-24.8
		124	2.1	-3.0
		131	7.0	-3.0
		130	7.0	-24.8

LC		NODE	Fxx	Fyy	Fxy	Fmax	Fmin	ANGLE
RC ENV~2	Max	Cent	0.3	0.7	0.3	0.9	0.1	71.49
		123	0.2	1.2	0.3	1.3	0.1	76.53
		124	0.2	0.3	0.3	0.5	-0.1	48.48
		131	0.4	0.3	0.3	0.5	0.0	29.74
		130	0.4	1.2	0.3	1.3	0.2	77.49
	Min	Cent	-0.3	0.2	0.2	0.4	-0.3	54.01
		123	-0.2	0.4	0.2	0.5	-0.2	62.29
		124	-0.2	0.1	0.2	0.2	-0.3	54.91
		131	-0.4	0.1	0.2	0.2	-0.5	68.17
		130	-0.4	0.4	0.2	0.6	-0.4	62.07

	NODE	Mxx	Myy	Mxy	Mmax	Mmin	ANGLE
Max	Cent	-0.4	3.8	0.3	3.8	-0.4	85.66
	123	3.7	4.1	0.8	4.7	3.1	51.33
	124	-3.2	1.9	0.3	1.9	-3.2	86.94
	131	-4.6	2.8	-0.3	2.8	-4.7	-87.84
	130	3.3	6.8	0.3	6.8	3.2	87.00
Min	Cent	-1.3	3.3	-0.0	3.3	-1.3	-89.60
	123	1.6	3.3	0.4	3.5	1.5	69.61
	124	-3.7	1.6	-0.0	1.6	-3.7	-89.99
	131	-5.2	2.5	-0.6	2.5	-5.3	-85.70
	130	1.5	5.7	-0.1	5.7	1.5	-88.78

	NODE	Vxx	Vyy
Max	Cent	12.8	-2.6
	123	12.0	-3.1
	124	12.0	-2.1
	131	13.7	-2.1
	130	13.7	-3.1
Min	Cent	9.4	-4.2
	123	8.6	-6.2
	124	8.6	-2.3
	131	10.3	-2.3
	130	10.3	-6.2

ELEM	MAT	SEC	LC		NODE	Fxx	Fyy	Fxy	Fmax	Fmin	ANGLE
105	1	1	SX (RS)		Cent	0.6	0.2	0.4	0.9	-0.1	34.14
					124	0.7	0.4	0.4	1.0	0.1	34.83
					125	0.7	0.1	0.4	0.9	-0.1	27.35
					132	0.5	0.1	0.4	0.8	-0.2	33.02
					131	0.5	0.4	0.4	0.9	-0.0	41.95

	NODE	Mxx	Myy	Mxy	Mmax	Mmin	ANGLE
	Cent	0.6	0.4	0.2	0.8	0.2	29.26
	124	0.3	0.6	0.3	0.8	0.1	57.35
	125	1.2	0.2	0.2	1.3	0.2	12.38
	132	1.3	0.2	0.2	1.3	0.2	7.61
	131	0.3	0.6	0.2	0.7	0.2	58.88

	NODE	Vxx	Vyy
	Cent	2.2	0.1
	124	2.3	0.1
	125	2.3	0.1
	132	2.1	0.1
	131	2.1	0.1

LC		NODE	Fxx	Fyy	Fxy	Fmax	Fmin	ANGLE
SY (RS)		Cent	2.2	0.3	0.9	2.6	-0.1	22.11
		124	2.6	0.3	0.9	2.9	-0.0	19.48
		125	2.6	0.3	0.9	2.9	0.0	19.60
		132	1.9	0.3	0.9	2.3	-0.1	25.38
		131	1.9	0.3	0.9	2.3	-0.1	25.20

	NODE	Mxx	Myy	Mxy	Mmax	Mmin	ANGLE
	Cent	1.1	0.7	1.7	2.7	-0.9	41.12
	124	1.2	0.4	1.7	2.5	-0.9	38.72
	125	1.4	0.7	1.5	2.6	-0.5	38.69
	132	1.0	1.6	1.9	3.2	-0.6	49.04
	131	1.4	0.6	2.0	3.1	-1.1	39.36

	NODE	Vxx	Vyy
	Cent	1.1	0.6
	124	0.8	0.7
	125	0.8	1.7
	132	1.5	1.7
	131	1.5	0.7

LC		NODE	Fxx	Fyy	Fxy	Fmax	Fmin	ANGLE
RC ENV~1	Max	Cent	2.3	0.5	1.0	2.7	0.2	24.02
		124	2.7	0.5	1.0	3.1	0.3	21.39
		125	2.7	0.4	1.0	3.1	0.2	21.26
		132	1.9	0.4	1.0	2.4	0.0	27.18
		131	1.9	0.5	1.0	2.4	0.1	27.36
	Min	Cent	-2.2	-0.2	-0.8	0.1	-2.5	-60.70
		124	-2.6	-0.2	-0.8	-0.0	-2.8	-60.54
		125	-2.6	-0.2	-0.8	0.0	-2.8	-72.16
		132	-1.8	-0.2	-0.8	0.1	-2.2	-66.60
		131	-1.8	-0.2	-0.8	0.0	-2.1	-52.56

	NODE	Mxx	Myy	Mxy	Mmax	Mmin	ANGLE
Max	Cent	-3.4	2.3	1.2	2.5	-3.6	78.83
	124	-1.9	2.6	1.4	2.6	-2.3	-87.55
	125	-4.4	1.3	1.0	1.5	-4.6	79.97
	132	-4.7	2.9	1.0	3.0	-4.7	82.62
	131	-1.9	4.1	1.4	4.2	-2.2	-84.30
Min	Cent	-7.1	1.0	-2.3	1.4	-7.1	-83.08
	124	-4.8	1.2	-2.0	1.2	-4.9	-82.37
	125	-9.4	-0.1	-2.0	0.4	-9.4	-75.27
	132	-9.6	-0.3	-2.7	0.6	-9.7	-70.62
	131	-4.9	2.4	-2.7	2.5	-5.6	-81.60

	NODE	Vxx	Vyy
Max	Cent	8.2	-1.2
	124	8.4	-1.6
	125	8.4	0.4
	132	8.0	0.4
	131	8.0	-1.6
Min	Cent	2.2	-2.4
	124	2.1	-3.0
	125	2.1	-3.0
	132	2.2	-3.0
	131	2.2	-3.0

LC		NODE	Fxx	Fyy	Fxy	Fmax	Fmin	ANGLE
RC ENV~2	Max	Cent	0.1	0.3	0.2	0.3	0.1	57.00
		124	0.2	0.3	0.2	0.4	0.2	56.65
		125	0.2	0.2	0.2	0.3	0.1	41.77
		132	0.1	0.2	0.2	0.3	0.0	51.62
		131	0.1	0.3	0.2	0.4	0.0	67.56
	Min	Cent	0.0	0.1	0.0	0.2	-0.1	50.95
		124	-0.0	0.0	0.0	0.1	-0.1	52.42
		125	-0.0	0.1	0.0	0.2	-0.1	55.81
		132	0.0	0.1	0.0	0.1	-0.1	62.25
		131	0.0	0.0	0.0	0.2	-0.1	45.72

	NODE	Mxx	Myy	Mxy	Mmax	Mmin	ANGLE
Max	Cent	-4.5	1.7	-0.5	1.8	-4.6	-85.49
	124	-3.1	2.0	-0.2	2.0	-3.1	-87.41
	125	-5.8	0.6	-0.4	0.6	-5.8	-85.98
	132	-5.9	1.3	-0.8	1.4	-6.0	-83.68
	131	-3.2	3.1	-0.6	3.2	-3.3	-84.27
Min	Cent	-5.3	1.4	-0.7	1.5	-5.3	-84.20
	124	-3.6	1.6	-0.5	1.7	-3.6	-84.39

125	-7.0	0.4	-0.6	0.4	-7.0	-85.75
132	-7.2	0.8	-1.0	0.9	-7.3	-83.01
131	-3.7	2.8	-0.9	2.9	-3.8	-82.49

	NODE	Vxx	Vyy
Max	Cent	6.0	-1.5
	124	6.2	-2.1
	125	6.2	-0.8
	132	5.9	-0.8
	131	5.9	-2.1
Min	Cent	4.0	-1.8
	124	4.0	-2.3
	125	4.0	-1.3
	132	4.0	-1.3
	131	4.0	-2.3

ELEM	MAT	SEC	LC		NODE	Fxx	Fyy	Fxy	Fmax	Fmin	ANGLE
106	1	1	SX	(RS)	Cent	1.1	0.1	0.4	1.2	-0.1	19.80
					125	1.3	0.2	0.4	1.4	0.1	18.89
					126	1.3	0.1	0.4	1.4	0.0	18.27
					133	0.9	0.1	0.4	1.1	-0.0	23.66
					132	0.9	0.2	0.4	1.1	0.0	24.59

	NODE	Mxx	Myy	Mxy	Mmax	Mmin	ANGLE
	Cent	1.8	0.2	0.2	1.8	0.2	7.37
	125	1.2	0.2	0.2	1.2	0.2	10.79
	126	2.4	0.2	0.2	2.4	0.2	6.40
	133	2.3	0.3	0.2	2.4	0.2	6.18
	132	1.2	0.2	0.2	1.3	0.2	9.78

	NODE	Vxx	Vyy
	Cent	2.0	0.1
	125	2.1	0.1
	126	2.1	0.1
	133	2.0	0.1
	132	2.0	0.1

LC		NODE	Fxx	Fyy	Fxy	Fmax	Fmin	ANGLE
SY	(RS)	Cent	1.9	0.3	0.6	2.1	0.1	18.56
		125	2.3	0.3	0.6	2.4	0.1	15.59
		126	2.3	0.4	0.6	2.5	0.2	16.42
		133	1.6	0.4	0.6	1.9	0.2	22.61
		132	1.6	0.3	0.6	1.8	0.1	21.20

	NODE	Mxx	Myy	Mxy	Mmax	Mmin	ANGLE
	Cent	1.2	1.1	1.4	2.6	-0.2	43.56
	125	1.3	0.7	1.5	2.6	-0.5	39.62
	126	1.6	0.9	1.4	2.7	-0.2	38.08
	133	1.1	1.2	1.3	2.5	-0.1	46.26
	132	1.0	1.6	1.4	2.7	-0.1	50.40

	NODE	Vxx	Vyy
	Cent	0.6	1.2
	125	0.4	1.7
	126	0.4	0.8
	133	0.9	0.8
	132	0.9	1.7

LC		NODE	Fxx	Fyy	Fxy	Fmax	Fmin	ANGLE
RC ENV~1	Max	Cent	2.0	0.4	0.6	2.2	0.2	17.94
		125	2.3	0.4	0.6	2.5	0.3	15.53
		126	2.3	0.5	0.6	2.5	0.3	15.88
		133	1.7	0.5	0.6	2.0	0.2	21.03
		132	1.7	0.4	0.6	2.0	0.3	20.47
	Min	Cent	-1.8	-0.3	-0.6	-0.0	-2.1	-70.83
		125	-2.2	-0.2	-0.6	-0.0	-2.4	-74.35
		126	-2.2	-0.4	-0.6	-0.2	-2.4	-73.05
		133	-1.5	-0.4	-0.6	-0.1	-1.8	-65.77

132	-1.5	-0.2	-0.6	0.0	-1.7	80.19

	NODE	Mxx	Myy	Mxy	Mmax	Mmin	ANGLE
Max	Cent	-4.1	1.9	0.7	2.0	-4.2	83.74
	125	-4.5	1.3	0.9	1.5	-4.6	81.65
	126	-3.8	1.2	0.8	1.3	-3.9	82.64
	133	-3.7	2.3	0.6	2.4	-3.8	85.34
	132	-4.3	2.9	0.7	3.0	-4.4	84.65
Min	Cent	-9.8	-0.3	-2.1	0.3	-9.9	-74.47
	125	-9.3	-0.1	-2.1	0.5	-9.4	-74.19
	126	-10.7	-0.6	-2.0	-0.1	-10.8	-75.35
	133	-10.4	-0.1	-2.0	0.4	-10.4	-75.16
	132	-8.9	-0.2	-2.1	0.4	-9.0	-73.09

	NODE	Vxx	Vyy
Max	Cent	2.8	-0.1
	125	2.7	0.4
	126	2.7	-0.6
	133	2.8	-0.6
	132	2.8	0.4
Min	Cent	-1.3	-2.6
	125	-1.4	-3.0
	126	-1.4	-2.2
	133	-1.1	-2.2
	132	-1.1	-3.0

LC		NODE	Fxx	Fyy	Fxy	Fmax	Fmin	ANGLE
RC ENV~2	Max	Cent	0.4	0.1	0.0	0.5	0.1	-15.80
		125	0.4	0.2	0.0	0.5	0.2	-20.24
		126	0.4	0.1	0.0	0.5	0.0	-12.19
		133	0.4	0.1	0.0	0.4	0.1	-12.84
		132	0.4	0.2	0.0	0.5	0.2	-21.87
	Min	Cent	-0.2	0.1	-0.1	0.1	-0.2	-89.95
		125	-0.3	0.0	-0.1	0.0	-0.3	85.13
		126	-0.3	0.0	-0.1	0.1	-0.3	-80.78
		133	-0.1	0.0	-0.1	0.1	-0.1	-89.92
		132	-0.1	0.0	-0.1	0.0	-0.1	80.94

	NODE	Mxx	Myy	Mxy	Mmax	Mmin	ANGLE
Max	Cent	-5.8	0.8	-0.6	0.9	-5.9	-84.16
	125	-5.7	0.6	-0.5	0.7	-5.8	-84.58
	126	-6.0	0.3	-0.5	0.4	-6.1	-83.16
	133	-5.9	1.1	-0.6	1.2	-6.0	-84.20
	132	-5.5	1.4	-0.6	1.4	-5.6	-84.35
Min	Cent	-7.3	0.5	-0.8	0.5	-7.3	-85.96
	125	-6.9	0.4	-0.8	0.5	-7.0	-84.71
	126	-7.9	-0.0	-0.8	0.0	-8.0	-86.57
	133	-7.7	0.6	-0.9	0.6	-7.7	-86.14
	132	-6.7	0.9	-0.9	1.0	-6.7	-84.25

	NODE	Vxx	Vyy
Max	Cent	1.7	-0.9
	125	1.6	-0.8
	126	1.6	-1.0
	133	1.8	-1.0
	132	1.8	-0.8
Min	Cent	0.2	-1.3
	125	0.1	-1.3
	126	0.1	-1.4
	133	0.4	-1.4
	132	0.4	-1.3

ELEM	MAT	SEC	LC		NODE	Fxx	Fyy	Fxy	Fmax	Fmin	ANGLE
107	1	1	SX (RS)		Cent	1.7	0.2	0.3	1.7	0.1	11.43
					126	1.8	0.1	0.3	1.8	0.0	10.12
					127	1.8	0.4	0.3	1.8	0.3	12.25
					134	1.6	0.4	0.3	1.7	0.3	13.59
					133	1.6	0.1	0.3	1.7	0.0	11.04

	NODE	Mxx	Myy	Mxy	Mmax	Mmin	ANGLE

Cent	2.9	0.3	0.3	2.9	0.3	7.65
126	2.4	0.2	0.3	2.4	0.2	7.95
127	3.5	0.4	0.4	3.6	0.4	7.11
134	3.4	0.5	0.4	3.4	0.4	7.71
133	2.3	0.3	0.3	2.3	0.2	8.33

NODE	Vxx	Vyy
Cent	1.9	0.2
126	2.0	0.1
127	2.0	0.3
134	1.8	0.3
133	1.8	0.1

LC		NODE	Fxx	Fyy	Fxy	Fmax	Fmin	ANGLE
SY (RS)		Cent	1.6	0.3	0.6	1.8	0.1	22.58
		126	1.9	0.4	0.6	2.1	0.2	19.99
		127	1.9	0.3	0.6	2.1	0.1	18.85
		134	1.3	0.3	0.6	1.6	-0.0	25.36
		133	1.3	0.4	0.6	1.6	0.1	27.19

	NODE	Mxx	Myy	Mxy	Mmax	Mmin	ANGLE
	Cent	1.3	1.1	1.2	2.4	-0.0	42.30
	126	1.6	0.9	1.3	2.6	-0.1	37.50
	127	1.5	0.8	1.2	2.5	-0.1	37.25
	134	1.1	1.4	1.2	2.5	0.1	48.67
	133	1.1	1.2	1.2	2.4	-0.1	46.43

NODE	Vxx	Vyy
Cent	0.1	1.0
126	0.4	0.8
127	0.4	1.2
134	0.5	1.2
133	0.5	0.8

LC		NODE	Fxx	Fyy	Fxy	Fmax	Fmin	ANGLE
RC ENV~1	Max	Cent	1.8	0.4	0.5	1.9	0.3	18.73
		126	2.0	0.5	0.5	2.1	0.3	16.75
		127	2.0	0.5	0.5	2.1	0.5	15.96
		134	1.8	0.5	0.5	1.8	0.5	8.11
		133	1.8	0.5	0.5	1.8	0.3	6.47
	Min	Cent	-1.5	-0.3	-0.7	-0.0	-1.8	-74.23
		126	-1.8	-0.3	-0.7	-0.0	-2.1	-67.15
		127	-1.8	-0.3	-0.7	-0.2	-2.1	-73.86
		134	-1.4	-0.3	-0.7	-0.2	-1.6	-70.96
		133	-1.4	-0.3	-0.7	0.1	-1.5	-81.98

	NODE	Mxx	Myy	Mxy	Mmax	Mmin	ANGLE
Max	Cent	-2.5	2.0	0.6	2.1	-2.6	84.61
	126	-4.0	1.2	0.6	1.2	-4.0	84.17
	127	-1.1	1.5	0.5	1.6	-1.1	83.41
	134	-1.2	3.1	0.6	3.1	-1.3	85.07
	133	-3.8	2.3	0.6	2.4	-3.8	84.99
Min	Cent	-9.7	-0.2	-1.9	0.3	-9.7	-75.15
	126	-10.9	-0.7	-2.0	-0.2	-10.9	-75.80
	127	-8.9	-0.1	-1.9	0.4	-8.9	-82.76
	134	-8.6	0.3	-1.8	0.8	-8.7	-74.43
	133	-10.4	-0.1	-1.9	0.3	-10.4	-76.15

NODE	Vxx	Vyy
Max Cent	-0.8	-0.6
126	-0.9	-0.6
127	-0.9	-0.5
134	-0.6	-0.5
133	-0.6	-0.6
Min Cent	-4.6	-2.6
126	-5.0	-2.2
127	-5.0	-3.0
134	-4.3	-3.0
133	-4.3	-2.2

LC		NODE	Fxx	Fyy	Fxy	Fmax	Fmin	ANGLE
RC ENV~2	Max	Cent	0.7	0.1	-0.1	0.8	-0.0	-13.73
		126	0.7	0.1	-0.1	0.8	0.0	-15.66
		127	0.7	0.2	-0.1	0.7	-0.0	-13.46
		134	0.8	0.2	-0.1	0.8	0.0	-12.20
		133	0.8	0.1	-0.1	0.8	0.0	-14.02
	Min	Cent	-0.4	-0.0	-0.2	0.1	-0.4	-72.89
		126	-0.4	0.0	-0.2	0.0	-0.4	-81.54
		127	-0.4	-0.1	-0.2	0.2	-0.4	-76.79
		134	-0.3	-0.1	-0.2	0.2	-0.3	-73.53
		133	-0.3	0.0	-0.2	0.1	-0.3	-79.36

		NODE	Mxx	Myy	Mxy	Mmax	Mmin	ANGLE
	Max	Cent	-5.0	1.0	-0.4	1.1	-5.1	-82.56
		126	-6.2	0.3	-0.5	0.4	-6.3	-82.77
		127	-4.0	0.8	-0.4	1.0	-4.1	-80.20
		134	-4.0	1.7	-0.3	1.8	-4.1	-82.56
		133	-5.9	1.1	-0.4	1.2	-6.0	-85.00
	Min	Cent	-7.2	0.5	-0.8	0.6	-7.2	-87.01
		126	-8.1	-0.0	-0.8	0.0	-8.1	-86.58
		127	-6.5	0.4	-0.9	0.5	-6.5	-86.53
		134	-6.3	1.2	-0.8	1.2	-6.4	-87.52
		133	-7.7	0.6	-0.7	0.6	-7.7	-87.36

		NODE	Vxx	Vyy
	Max	Cent	-2.1	-1.1
		126	-2.3	-1.0
		127	-2.3	-1.3
		134	-1.9	-1.3
		133	-1.9	-1.0
	Min	Cent	-3.4	-1.6
		126	-3.7	-1.4
		127	-3.7	-1.7
		134	-3.2	-1.7
		133	-3.2	-1.4

ELEM	MAT	SEC	LC		NODE	Fxx	Fyy	Fxy	Fmax	Fmin	ANGLE
108	1	1	SX (RS)		Cent	2.5	0.5	0.1	2.5	0.5	3.89
					127	2.4	0.2	0.1	2.4	0.2	3.55
					128	2.4	0.8	0.1	2.4	0.8	4.68
					135	2.5	0.8	0.1	2.5	0.8	4.30
					134	2.5	0.2	0.1	2.5	0.2	3.33

		NODE	Mxx	Myy	Mxy	Mmax	Mmin	ANGLE
		Cent	3.9	0.7	0.6	4.0	0.6	9.62
		127	3.4	0.4	0.5	3.5	0.3	9.69
		128	4.7	0.9	0.7	4.8	0.8	9.87
		135	4.3	0.9	0.6	4.4	0.8	9.98
		134	3.3	0.5	0.5	3.3	0.4	9.31

		NODE	Vxx	Vyy
		Cent	1.9	0.2
		127	2.1	0.3
		128	2.1	0.2
		135	1.7	0.2
		134	1.7	0.3

LC		NODE	Fxx	Fyy	Fxy	Fmax	Fmin	ANGLE
SY (RS)		Cent	1.2	0.3	0.9	1.8	-0.3	32.14
		127	1.4	0.3	0.9	1.9	-0.3	29.99
		128	1.4	0.3	0.9	1.9	-0.3	30.25
		135	1.1	0.3	0.9	1.7	-0.3	34.14
		134	1.1	0.3	0.9	1.7	-0.4	33.84

		NODE	Mxx	Myy	Mxy	Mmax	Mmin	ANGLE
		Cent	1.2	0.9	1.2	2.3	-0.2	41.88
		127	1.6	0.8	1.2	2.5	-0.0	36.59
		128	1.3	0.7	1.2	2.3	-0.3	38.08

		135	0.7	0.7	1.4	2.1	-0.6	44.51
		134	1.1	1.4	1.3	2.6	-0.0	48.43

	NODE	Vxx	Vyy
	Cent	0.4	0.7
	127	0.5	1.2
	128	0.5	0.3
	135	0.6	0.3
	134	0.6	1.2

LC		NODE	Fxx	Fyy	Fxy	Fmax	Fmin	ANGLE
RC ENV~1	Max	Cent	2.7	0.6	0.7	2.7	0.6	-2.61
		127	2.6	0.4	0.7	2.6	0.3	-2.43
		128	2.6	0.9	0.7	2.6	0.9	-3.13
		135	2.8	0.9	0.7	2.8	0.9	-2.81
		134	2.8	0.4	0.7	2.8	0.3	-2.24
	Min	Cent	-2.2	-0.4	-1.2	-0.3	-2.3	-78.99
		127	-2.2	-0.2	-1.2	-0.1	-2.2	-80.12
		128	-2.2	-0.7	-1.2	-0.6	-2.2	-76.93
		135	-2.2	-0.7	-1.2	-0.6	-2.3	-77.58
		134	-2.2	-0.2	-1.2	-0.1	-2.3	-80.50

	NODE	Mxx	Myy	Mxy	Mmax	Mmin	ANGLE
Max	Cent	1.1	2.8	0.4	3.1	1.1	-76.12
	127	-1.2	1.6	0.3	1.6	-1.3	86.45
	128	3.2	1.6	0.4	3.2	1.6	-6.63
	135	4.5	6.5	0.8	6.7	4.5	-77.84
	134	-2.0	3.0	0.7	3.0	-2.0	84.66
Min	Cent	-6.7	1.0	-2.1	1.5	-7.0	-80.42
	127	-8.9	-0.1	-2.1	0.5	-8.9	-72.64
	128	-6.3	-0.2	-2.1	0.2	-6.6	-76.51
	135	-4.1	3.8	-1.9	3.9	-4.2	-81.57
	134	-9.6	0.1	-1.9	0.6	-9.6	-74.82

	NODE	Vxx	Vyy
Max	Cent	-5.2	-3.5
	127	-3.4	-0.5
	128	-3.4	-6.2
	135	-7.1	-6.2
	134	-7.1	-0.5
Min	Cent	-11.2	-5.2
	127	-9.2	-3.0
	128	-9.2	-8.3
	135	-13.2	-8.3
	134	-13.2	-3.0

LC		NODE	Fxx	Fyy	Fxy	Fmax	Fmin	ANGLE
RC ENV~2	Max	Cent	1.2	0.3	-0.2	1.2	-0.0	-11.21
		127	1.1	0.2	-0.2	1.2	-0.0	-12.93
		128	1.1	0.4	-0.2	1.2	-0.1	-10.80
		135	1.3	0.4	-0.2	1.3	-0.1	-9.87
		134	1.3	0.2	-0.2	1.3	-0.0	-11.64
	Min	Cent	-0.6	-0.1	-0.3	0.3	-0.6	-68.00
		127	-0.6	0.0	-0.3	0.2	-0.6	-65.76
		128	-0.6	-0.2	-0.3	0.3	-0.6	-69.35
		135	-0.6	-0.2	-0.3	0.3	-0.7	-69.93
		134	-0.6	0.0	-0.3	0.2	-0.7	-66.51

	NODE	Mxx	Myy	Mxy	Mmax	Mmin	ANGLE
Max	Cent	-2.0	2.1	-0.4	2.3	-2.2	-76.71
	127	-4.1	0.8	-0.6	1.0	-4.3	-77.73
	128	-0.3	1.1	-0.5	1.7	-0.9	-60.76
	135	1.3	4.9	-0.1	5.1	1.1	-78.57
	134	-4.8	1.6	-0.2	1.7	-4.9	-83.20
Min	Cent	-4.7	1.6	-1.0	1.6	-4.7	-85.89
	127	-6.5	0.4	-1.1	0.5	-6.6	-85.23
	128	-3.6	0.4	-1.1	0.5	-3.6	-82.37
	135	-1.6	4.3	-0.8	4.3	-1.6	-87.53
	134	-7.1	1.0	-0.8	1.0	-7.1	-88.26

	NODE	Vxx	Vyy

Max	Cent	-6.7	-3.8
	127	-5.1	-1.3
	128	-5.1	-6.2
	135	-8.4	-6.2
	134	-8.4	-1.3
Min	Cent	-8.4	-4.1
	127	-6.9	-1.7
	128	-6.9	-6.5
	135	-9.9	-6.5
	134	-9.9	-1.7

ELEM	MAT	SEC	LC		NODE	Fxx	Fyy	Fxy	Fmax	Fmin	ANGLE
109	1	1	SX (RS)		Cent	3.7	1.0	0.3	3.8	1.0	6.94
					128	3.3	0.5	0.3	3.3	0.5	6.79
					129	3.3	1.6	0.3	3.3	1.5	10.70
					136	4.2	1.6	0.3	4.2	1.5	7.09
					135	4.2	0.5	0.3	4.2	0.5	5.11

	NODE	Mxx	Myy	Mxy	Mmax	Mmin	ANGLE
	Cent	5.1	0.9	0.9	5.3	0.7	11.56
	128	4.7	0.9	0.7	4.8	0.8	10.35
	129	5.6	0.6	0.8	5.7	0.5	9.30
	136	6.4	2.3	1.0	6.6	2.1	13.02
	135	3.9	0.8	0.9	4.1	0.6	14.92

	NODE	Vxx	Vyy
	Cent	3.0	2.6
	128	2.1	0.2
	129	2.1	5.0
	136	4.0	5.0
	135	4.0	0.2

LC		NODE	Fxx	Fyy	Fxy	Fmax	Fmin	ANGLE
SY (RS)		Cent	1.0	0.9	1.3	2.2	-0.3	43.36
		128	1.3	0.3	1.3	2.1	-0.6	34.70
		129	1.3	1.8	1.3	2.8	0.2	50.71
		136	0.8	1.8	1.3	2.6	-0.0	55.05
		135	0.8	0.3	1.3	1.9	-0.7	39.01

	NODE	Mxx	Myy	Mxy	Mmax	Mmin	ANGLE
	Cent	0.8	1.2	1.2	2.2	-0.3	50.49
	128	1.4	0.7	1.5	2.6	-0.4	38.05
	129	1.2	1.3	1.4	2.7	-0.1	45.70
	136	1.0	5.0	0.8	5.1	0.9	78.77
	135	0.8	0.7	0.9	1.6	-0.2	44.08

	NODE	Vxx	Vyy
	Cent	2.1	5.3
	128	3.3	0.3
	129	3.3	10.6
	136	1.0	10.6
	135	1.0	0.3

LC		NODE	Fxx	Fyy	Fxy	Fmax	Fmin	ANGLE
RC ENV~1	Max	Cent	4.1	1.5	1.0	4.1	1.5	0.51
		128	3.5	0.6	1.0	3.5	0.6	0.46
		129	3.5	2.5	1.0	3.5	2.3	1.10
		136	4.7	2.5	1.0	4.7	2.3	0.56
		135	4.7	0.6	1.0	4.7	0.6	0.33
	Min	Cent	-3.3	-0.6	-1.6	-0.5	-3.5	-77.49
		128	-3.0	-0.4	-1.6	-0.3	-3.2	-76.94
		129	-3.0	-1.0	-1.6	-0.7	-3.2	-74.76
		136	-3.7	-1.0	-1.6	-0.7	-3.8	-78.00
		135	-3.7	-0.4	-1.6	-0.3	-3.8	-79.43

	NODE	Mxx	Myy	Mxy	Mmax	Mmin	ANGLE
Max	Cent	6.0	4.8	0.6	6.0	4.0	8.63

		128	3.1	1.6	0.8	3.1	1.6	2.20
		129	8.2	3.7	0.7	8.2	3.2	1.43
		136	9.4	10.2	0.4	10.2	7.5	87.81
		135	3.2	6.2	0.4	6.4	3.2	-79.65
	Min	Cent	-4.3	1.9	-1.8	2.6	-4.6	-77.60
		128	-6.3	-0.2	-2.1	0.1	-6.6	-77.86
		129	-2.9	0.8	-2.1	2.0	-3.3	-72.62
		136	-3.4	0.2	-1.6	2.7	-3.8	-29.01
		135	-4.6	3.6	-1.5	3.9	-4.9	-80.44

		NODE	Vxx	Vyy
	Max	Cent	-3.7	-0.7
		128	-3.9	-6.2
		129	-3.9	5.2
		136	-2.4	5.2
		135	-2.4	-6.2
	Min	Cent	-12.4	-11.2
		128	-12.9	-8.3
		129	-12.9	-16.0
		136	-12.1	-16.0
		135	-12.1	-8.3

LC		NODE	Fxx	Fyy	Fxy	Fmax	Fmin	ANGLE
RC ENV~2	Max	Cent	1.8	0.9	-0.1	1.8	0.2	-6.11
		128	1.5	0.3	-0.1	1.5	-0.1	-6.88
		129	1.5	1.5	-0.1	1.6	0.5	-78.06
		136	2.2	1.5	-0.1	2.2	0.5	-5.48
		135	2.2	0.3	-0.1	2.2	-0.0	-4.92
	Min	Cent	-1.0	-0.1	-0.5	0.6	-1.1	-42.26
		128	-0.9	-0.1	-0.5	0.3	-1.0	-65.99
		129	-0.9	-0.0	-0.5	0.7	-1.0	-60.14
		136	-1.1	-0.0	-0.5	0.8	-1.2	-50.63
		135	-1.1	-0.1	-0.5	0.3	-1.2	-66.93

		NODE	Mxx	Myy	Mxy	Mmax	Mmin	ANGLE
	Max	Cent	2.4	3.6	-0.2	4.1	1.9	-60.93
		128	-0.4	1.0	-0.3	1.5	-0.9	-63.51
		129	4.7	2.8	-0.4	5.1	2.4	-19.16
		136	5.2	6.4	-0.1	6.8	4.7	-61.52
		135	0.2	4.7	-0.1	4.9	0.0	-80.22
	Min	Cent	-1.1	2.9	-0.9	2.9	-1.1	-87.00
		128	-3.6	0.4	-1.0	0.4	-3.6	-85.02
		129	0.8	2.1	-1.1	2.5	0.7	-73.08
		136	0.9	4.7	-0.9	4.7	0.9	-87.82
		135	-2.5	4.1	-0.8	4.1	-2.5	-88.98

		NODE	Vxx	Vyy
	Max	Cent	-6.0	-5.1
		128	-6.7	-6.2
		129	-6.7	-3.8
		136	-5.4	-3.8
		135	-5.4	-6.2
	Min	Cent	-9.1	-6.9
		128	-9.5	-6.5
		129	-9.5	-7.4
		136	-8.9	-7.4
		135	-8.9	-6.5

ELEM	MAT	SEC	LC		NODE	Fxx	Fyy	Fxy	Fmax	Fmin	ANGLE
110	1	1	SX (RS)		Cent	6.1	0.1	2.8	7.2	-1.0	21.34
					129	0.3	1.1	2.8	3.5	-2.1	48.93
					47	0.3	1.2	2.8	3.6	-2.1	49.55
					7	12.2	1.2	2.8	12.8	0.5	13.46
					136	12.2	1.1	2.8	12.8	0.4	13.33

		NODE	Mxx	Myy	Mxy	Mmax	Mmin	ANGLE
		Cent	9.2	1.3	1.4	9.4	1.0	9.92
		129	5.7	0.6	1.4	6.0	0.2	14.01
		47	3.6	1.0	5.2	7.7	-3.0	37.86
		7	27.8	4.3	5.0	28.8	3.3	11.54
		136	6.8	2.4	1.5	7.3	1.9	17.55

	NODE	Vxx	Vyy
	Cent	10.4	1.7
	129	16.3	5.0
	47	16.3	1.8
	7	37.0	1.8
	136	37.0	5.0

LC		NODE	Fxx	Fyy	Fxy	Fmax	Fmin	ANGLE
SY (RS)		Cent	0.8	2.7	3.0	4.9	-1.4	54.04
		129	0.2	1.8	3.0	4.1	-2.1	52.75
		47	0.2	7.2	3.0	8.3	-0.9	69.95
		7	1.7	7.2	3.0	8.5	0.4	66.57
		136	1.7	1.8	3.0	4.7	-1.2	45.78

	NODE	Mxx	Myy	Mxy	Mmax	Mmin	ANGLE
	Cent	1.9	4.0	1.8	5.1	0.9	60.03
	129	0.8	1.1	0.5	1.5	0.4	53.61
	47	2.8	1.4	0.8	3.1	1.0	23.29
	7	5.6	18.6	4.4	20.0	4.3	73.15
	136	1.3	5.0	4.5	8.0	-1.7	56.27

	NODE	Vxx	Vyy
	Cent	4.1	9.9
	129	5.0	10.6
	47	5.0	30.4
	7	3.5	30.4
	136	3.5	10.6

LC		NODE	Fxx	Fyy	Fxy	Fmax	Fmin	ANGLE
RC ENV~1	Max	Cent	6.8	1.9	2.3	7.3	-0.6	14.57
		129	0.7	2.6	2.3	4.0	0.5	-51.46
		47	0.7	4.8	2.3	5.8	-0.5	66.98
		7	13.2	4.8	2.3	13.5	1.2	8.12
		136	13.2	2.6	2.3	13.5	1.5	10.13
	Min	Cent	-5.5	-3.5	-3.7	0.6	-7.3	-48.44
		129	-0.0	-1.0	-3.7	0.7	-4.2	66.04
		47	-0.0	-9.6	-3.7	0.3	-10.8	10.82
		7	-11.2	-9.6	-3.7	-2.2	-12.5	-68.76
		136	-11.2	-1.0	-3.7	0.7	-12.2	-73.68

	NODE	Mxx	Myy	Mxy	Mmax	Mmin	ANGLE
Max	Cent	14.5	9.7	1.2	14.5	9.5	5.73
	129	8.6	3.9	0.1	8.6	2.8	1.42
	47	8.8	0.9	4.4	10.3	0.9	24.45
	7	39.8	34.8	5.5	41.3	26.6	14.86
	136	8.3	9.9	4.6	12.2	6.1	64.00
Min	Cent	-3.9	1.7	-2.5	4.9	-4.4	-76.68
	129	-2.8	1.1	-2.6	2.8	-4.0	-65.17
	47	1.0	-1.8	-6.0	2.4	-6.3	-20.01
	7	-15.9	-2.5	-4.5	7.8	-16.6	-20.49
	136	-5.3	-0.1	-4.4	2.8	-5.6	-79.63

	NODE	Vxx	Vyy
Max	Cent	1.0	-6.5
	129	12.3	5.2
	47	12.3	3.0
	7	22.3	3.0
	136	22.3	5.2
Min	Cent	-22.0	-27.6
	129	-20.3	-16.0
	47	-20.3	-57.8
	7	-51.8	-57.8
	136	-51.8	-16.0

LC		NODE	Fxx	Fyy	Fxy	Fmax	Fmin	ANGLE
RC ENV~2	Max	Cent	3.2	-0.6	0.6	3.2	-0.6	5.28
		129	0.5	1.4	0.6	2.9	0.3	-51.63

	47	0.5	-1.5	0.6	1.3	-1.5	-22.67
	7	6.0	-1.5	0.6	6.0	-1.5	2.62
	136	6.0	1.4	0.6	6.0	0.8	3.79
Min	Cent	-1.7	-1.2	-1.9	0.5	-3.2	-45.79
	129	0.2	0.2	-1.9	0.5	-1.1	54.63
	47	0.2	-3.7	-1.9	0.2	-4.3	5.41
	7	-3.7	-3.7	-1.9	-1.5	-5.3	-45.80
	136	-3.7	0.2	-1.9	1.4	-4.3	-69.20

	NODE	Mxx	Myy	Mxy	Mmax	Mmin	ANGLE
Max	Cent	9.1	7.2	-0.4	9.2	7.0	-9.08
	129	5.2	2.8	-0.8	6.1	1.8	-26.83
	47	6.5	-0.3	0.8	7.2	-0.5	-18.69
	7	23.8	21.7	2.2	24.9	19.5	27.44
	136	3.5	6.0	0.7	6.2	3.3	-76.41
Min	Cent	2.3	5.2	-1.2	5.6	1.9	-69.61
	129	1.1	2.2	-1.8	2.8	0.7	-64.10
	47	3.9	-1.1	-2.5	4.0	-1.2	9.24
	7	3.2	14.2	-1.3	14.3	3.0	-83.12
	136	-1.1	4.3	-0.7	4.3	-1.2	83.67

	NODE	Vxx	Vyy
Max	Cent	-6.5	-15.7
	129	0.9	-3.8
	47	0.9	-27.1
	7	-3.7	-27.1
	136	-3.7	-3.8
Min	Cent	-15.8	-20.6
	129	-10.1	-7.4
	47	-10.1	-35.4
	7	-31.7	-35.4
	136	-31.7	-7.4

ELEM	MAT	SEC	LC	NODE	Fxx	Fyy	Fxy	Fmax	Fmin	ANGLE
111	1	1	SX (RS)	Cent	3.3	0.9	3.8	6.0	-1.9	36.14
				45	9.1	0.4	3.8	10.5	-1.0	20.49
				5	9.1	2.2	3.8	10.7	0.5	23.71
				139	2.5	2.2	3.8	6.1	-1.4	43.61
				138	2.5	0.4	3.8	5.4	-2.4	37.16

	NODE	Mxx	Myy	Mxy	Mmax	Mmin	ANGLE
	Cent	5.9	3.1	2.6	7.5	1.5	31.20
	45	1.8	4.0	0.7	4.2	1.6	74.37
	5	26.9	8.7	6.6	29.0	6.5	18.02
	139	7.0	1.1	6.7	11.3	-3.3	33.09
	138	1.7	0.9	0.7	2.1	0.5	30.07

	NODE	Vxx	Vyy
	Cent	14.5	6.1
	45	43.9	6.6
	5	43.9	5.8
	139	14.8	5.8
	138	14.8	6.6

LC	NODE	Fxx	Fyy	Fxy	Fmax	Fmin	ANGLE
SY (RS)	Cent	0.1	4.5	2.0	5.3	-0.6	68.55
	45	0.8	0.6	2.0	2.7	-1.3	43.58
	5	0.8	9.2	2.0	9.7	0.3	77.28
	139	0.8	9.2	2.0	9.7	0.4	77.23
	138	0.8	0.6	2.0	2.7	-1.3	43.30

	NODE	Mxx	Myy	Mxy	Mmax	Mmin	ANGLE
	Cent	1.0	6.5	1.2	6.7	0.7	78.58
	45	0.6	2.6	3.8	5.5	-2.3	52.45
	5	3.1	19.6	3.5	20.3	2.4	78.34
	139	2.1	5.4	0.9	5.7	1.9	75.22
	138	0.6	3.7	0.8	3.9	0.4	76.60

	NODE	Vxx	Vyy

	Cent	1.5	7.5	
	45	3.2	12.0	
	5	3.2	27.0	
	139	4.3	27.0	
	138	4.3	12.0	

LC		NODE	Fxx	Fyy	Fxy	Fmax	Fmin	ANGLE
RC ENV~1	Max	Cent	3.0	6.6	3.2	7.0	-0.3	-56.01
		45	8.4	1.0	3.2	9.6	-0.4	20.21
		5	8.4	13.1	3.2	13.3	3.8	83.47
		139	2.6	13.1	3.2	13.3	1.0	83.12
		138	2.6	1.0	3.2	5.0	0.5	37.55
	Min	Cent	-3.6	-2.4	-4.3	1.3	-6.1	-34.67
		45	-9.7	-0.2	-4.3	0.8	-11.3	79.91
		5	-9.7	-5.4	-4.3	-0.2	-11.1	-25.84
		139	-2.5	-5.4	-4.3	0.3	-6.5	-23.85
		138	-2.5	-0.2	-4.3	1.0	-5.7	-55.24

		NODE	Mxx	Myy	Mxy	Mmax	Mmin	ANGLE
	Max	Cent	10.8	10.8	3.7	13.1	7.8	32.53
		45	1.4	9.4	5.1	10.3	0.9	62.89
		5	38.2	25.9	7.7	40.5	14.0	16.78
		139	13.2	7.5	7.1	16.8	6.5	27.31
		138	4.9	7.5	1.4	7.9	4.5	73.38
	Min	Cent	-0.9	-2.2	-1.6	2.1	-2.2	-61.57
		45	-2.1	1.0	-2.4	1.2	-2.3	78.61
		5	-15.6	-13.3	-5.5	-0.4	-17.6	-69.96
		139	-0.8	-3.4	-6.3	4.1	-6.2	-4.16
		138	0.9	0.1	-0.1	2.0	0.1	-4.39

		NODE	Vxx	Vyy
	Max	Cent	0.6	12.3
		45	23.2	15.5
		5	23.2	33.2
		139	7.6	33.2
		138	7.6	15.5
	Min	Cent	-28.5	-2.7
		45	-64.5	-8.6
		5	-64.5	-20.8
		139	-22.1	-20.8
		138	-22.1	-8.6

LC		NODE	Fxx	Fyy	Fxy	Fmax	Fmin	ANGLE
RC ENV~2	Max	Cent	1.2	3.6	1.3	4.9	-0.3	-57.36
		45	3.5	0.7	1.3	4.7	-0.6	-29.84
		5	3.5	6.7	1.3	7.7	1.9	-60.64
		139	1.2	6.7	1.3	7.1	0.7	-76.48
		138	1.2	0.7	1.3	2.2	0.4	-53.69
	Min	Cent	-1.8	1.4	-2.5	1.8	-2.2	79.67
		45	-4.8	0.3	-2.5	0.4	-5.0	-85.28
		5	-4.8	2.4	-2.5	2.6	-4.9	80.00
		139	-1.1	2.4	-2.5	3.0	-1.9	77.30
		138	-1.1	0.3	-2.5	0.5	-2.9	-59.86

		NODE	Mxx	Myy	Mxy	Mmax	Mmin	ANGLE
	Max	Cent	7.3	5.7	1.9	7.3	5.7	4.49
		45	0.2	6.9	1.6	7.3	-0.1	77.46
		5	21.7	10.2	3.3	21.8	10.1	-6.04
		139	9.3	2.1	2.5	10.0	2.1	17.52
		138	3.6	4.5	0.8	4.8	3.3	63.68
	Min	Cent	3.8	3.8	0.1	5.6	1.9	38.91
		45	-1.0	4.3	1.2	4.6	-1.4	77.35
		5	4.3	5.0	-1.2	8.0	1.3	47.98
		139	4.0	0.9	-2.0	5.0	0.4	-30.52
		138	2.5	3.8	0.4	4.0	2.3	67.90

		NODE	Vxx	Vyy
	Max	Cent	-11.1	8.5
		45	-9.4	6.5
		5	-9.4	11.4
		139	-2.2	11.4

		138	-2.2	6.5
	Min	Cent	-19.9	4.6
		45	-37.7	2.0
		5	-37.7	6.0
		139	-12.7	6.0
		138	-12.7	2.0

ELEM	MAT	SEC	LC		NODE	Fxx	Fyy	Fxy	Fmax	Fmin	ANGLE
112	1	1	SX (RS)		Cent	0.0	0.8	1.3	1.7	-0.9	53.33
					137	0.7	0.4	1.3	1.8	-0.7	40.73
					138	0.7	1.6	1.3	2.5	-0.2	54.30
					141	0.7	1.6	1.3	2.5	-0.2	54.80
					140	0.7	0.4	1.3	1.8	-0.7	41.28

	NODE	Mxx	Myy	Mxy	Mmax	Mmin	ANGLE
	Cent	0.4	0.7	1.1	1.7	-0.6	49.92
	137	0.3	2.4	1.1	2.8	-0.1	66.83
	138	1.4	2.1	1.2	3.0	0.5	53.10
	141	0.6	1.1	1.2	2.1	-0.4	51.20
	140	0.1	1.3	1.1	1.9	-0.5	59.24

	NODE	Vxx	Vyy
	Cent	0.8	5.6
	137	2.0	6.5
	138	2.0	5.1
	141	1.0	5.1
	140	1.0	6.5

LC		NODE	Fxx	Fyy	Fxy	Fmax	Fmin	ANGLE
SY (RS)		Cent	0.1	1.4	0.5	1.6	-0.1	72.87
		137	0.5	0.8	0.5	1.1	0.2	55.05
		138	0.5	2.2	0.5	2.4	0.4	76.16
		141	0.4	2.2	0.5	2.4	0.3	76.74
		140	0.4	0.8	0.5	1.1	0.1	57.46

	NODE	Mxx	Myy	Mxy	Mmax	Mmin	ANGLE
	Cent	0.3	3.3	0.4	3.4	0.2	83.31
	137	0.2	2.6	0.3	2.7	0.2	83.16
	138	1.0	4.0	0.2	4.1	1.0	85.78
	141	0.2	3.2	0.4	3.2	0.2	83.16
	140	0.1	3.5	0.4	3.5	0.0	82.58

	NODE	Vxx	Vyy
	Cent	1.0	0.2
	137	1.6	1.6
	138	1.6	1.6
	141	0.4	1.6
	140	0.4	1.6

LC		NODE	Fxx	Fyy	Fxy	Fmax	Fmin	ANGLE
RC ENV~1	Max	Cent	0.1	2.9	1.1	3.2	0.0	-70.66
		137	0.9	2.3	1.1	2.7	0.5	-59.46
		138	0.9	3.6	1.1	4.0	0.6	-71.11
		141	0.6	3.6	1.1	3.9	0.3	-76.40
		140	0.6	2.3	1.1	2.5	0.2	-75.01
	Min	Cent	-0.0	-0.3	-1.4	0.4	-1.2	-38.60
		137	-0.6	0.1	-1.4	0.5	-1.5	-55.27
		138	-0.6	-0.9	-1.4	0.0	-1.8	-31.58
		141	-0.8	-0.9	-1.4	-0.1	-1.9	-34.79
		140	-0.8	0.1	-1.4	0.5	-1.6	-58.47

		NODE	Mxx	Myy	Mxy	Mmax	Mmin	ANGLE
	Max	Cent	1.4	5.6	1.3	5.7	1.4	83.16
		137	0.2	5.4	1.2	5.4	0.1	85.28
		138	3.1	7.0	1.5	7.1	3.0	83.11
		141	2.9	4.8	1.4	4.9	2.0	79.32
		140	0.3	5.2	1.1	5.2	0.3	84.47
	Min	Cent	0.5	-1.0	-1.0	0.6	-1.1	-6.26

137	-0.4	0.2	-0.9	0.2	-1.0	-73.89
138	0.3	-1.0	-0.9	0.7	-1.0	2.75
141	1.1	-1.6	-1.0	1.4	-1.6	-2.99
140	0.1	-1.7	-1.0	0.1	-1.8	-12.24

	NODE	Vxx	Vyy
Max	Cent	-2.0	8.1
	137	-1.1	8.6
	138	-1.1	7.8
	141	-1.8	7.8
	140	-1.8	8.6
Min	Cent	-4.7	-3.2
	137	-5.5	-4.3
	138	-5.5	-2.4
	141	-4.7	-2.4
	140	-4.7	-4.3

LC		NODE	Fxx	Fyy	Fxy	Fmax	Fmin	ANGLE
RC ENV~2	Max	Cent	0.1	2.1	0.5	2.3	0.0	-71.47
		137	0.6	1.6	0.5	1.9	0.2	-60.72
		138	0.6	2.6	0.5	2.9	0.3	-71.95
		141	0.2	2.6	0.5	2.8	0.0	-76.92
		140	0.2	1.6	0.5	1.8	0.0	-75.56
	Min	Cent	0.0	0.5	-0.7	0.8	-0.3	58.99
		137	-0.2	0.6	-0.7	0.8	-0.4	74.87
		138	-0.2	0.4	-0.7	0.7	-0.5	61.31
		141	-0.4	0.4	-0.7	0.8	-0.6	50.37
		140	-0.4	0.6	-0.7	0.8	-0.7	72.07

	NODE	Mxx	Myy	Mxy	Mmax	Mmin	ANGLE
Max	Cent	1.1	2.7	0.3	2.7	1.0	-87.47
	137	0.0	3.8	0.2	3.8	0.0	-86.45
	138	2.3	4.0	0.5	4.0	2.3	-89.77
	141	2.1	1.6	0.3	2.2	1.5	27.77
	140	0.2	1.7	0.1	1.7	0.2	88.61
Min	Cent	0.8	1.8	-0.3	1.8	0.8	-82.00
	137	-0.1	2.6	-0.3	2.6	-0.2	85.21
	138	1.5	2.3	-0.1	2.4	1.3	66.11
	141	1.5	0.8	-0.3	1.6	0.7	-41.76
	140	0.1	0.7	-0.5	1.0	-0.1	-62.63

	NODE	Vxx	Vyy
Max	Cent	-3.0	5.2
	137	-3.0	5.7
	138	-3.0	4.9
	141	-2.5	4.9
	140	-2.5	5.7
Min	Cent	-3.5	1.7
	137	-4.1	1.7
	138	-4.1	1.7
	141	-3.5	1.7
	140	-3.5	1.7

ELEM	MAT	SEC	LC		NODE	Fxx	Fyy	Fxy	Fmax	Fmin	ANGLE
113	1	1	SX (RS)		Cent	1.4	1.0	1.4	2.6	-0.2	40.92
					138	2.5	1.3	1.4	3.4	0.4	33.29
					139	2.5	0.7	1.4	3.2	-0.1	28.26
					142	0.3	0.7	1.4	1.9	-0.9	49.31
					141	0.3	1.3	1.4	2.3	-0.7	55.40

	NODE	Mxx	Myy	Mxy	Mmax	Mmin	ANGLE
	Cent	1.7	0.4	1.7	2.9	-0.7	34.42
	138	2.0	2.2	1.9	4.0	0.2	47.00
	139	6.9	0.8	1.1	7.1	0.6	10.00
	142	1.1	0.4	1.3	2.1	-0.6	36.85
	141	0.9	1.2	2.0	3.1	-1.0	47.17

	NODE	Vxx	Vyy
	Cent	7.7	3.3
	138	14.8	5.1

	139	14.8	1.6	
	142	0.7	1.6	
	141	0.7	5.1	

LC		NODE	Fxx	Fyy	Fxy	Fmax	Fmin	ANGLE
SY (RS)		Cent	0.8	2.6	0.2	2.6	0.8	85.12
		138	1.2	2.1	0.2	2.1	1.2	80.45
		139	1.2	3.2	0.2	3.2	1.2	85.56
		142	0.4	3.2	0.2	3.2	0.4	86.75
		141	0.4	2.1	0.2	2.1	0.4	84.63

	NODE	Mxx	Myy	Mxy	Mmax	Mmin	ANGLE
	Cent	0.7	3.6	0.6	3.7	0.6	79.23
	138	0.6	3.7	0.5	3.8	0.5	81.47
	139	2.0	4.9	0.6	5.0	1.9	78.60
	142	0.7	2.7	0.6	2.8	0.5	75.10
	141	0.6	3.3	0.5	3.3	0.6	80.34

	NODE	Vxx	Vyy
	Cent	2.3	2.7
	138	4.3	1.6
	139	4.3	3.8
	142	0.3	3.8
	141	0.3	1.6

LC		NODE	Fxx	Fyy	Fxy	Fmax	Fmin	ANGLE
RC ENV~1	Max	Cent	1.3	4.1	1.3	4.1	0.7	88.07
		138	2.4	3.4	1.3	3.9	1.2	47.28
		139	2.4	4.9	1.3	4.9	1.1	88.26
		142	0.3	4.9	1.3	4.9	0.3	88.55
		141	0.3	3.4	1.3	3.6	0.3	-75.95
	Min	Cent	-1.5	-1.1	-1.4	-0.8	-2.2	-32.50
		138	-2.6	-0.8	-1.4	-0.7	-3.2	-71.11
		139	-2.6	-1.5	-1.4	-1.1	-3.1	-32.95
		142	-0.6	-1.5	-1.4	-0.5	-1.5	-11.91
		141	-0.6	-0.8	-1.4	-0.4	-1.6	-31.11

		NODE	Mxx	Myy	Mxy	Mmax	Mmin	ANGLE
	Max	Cent	7.2	6.2	1.9	7.2	4.5	3.31
		138	4.8	6.9	2.2	7.2	4.4	51.16
		139	13.4	8.3	1.3	13.6	7.6	7.98
		142	8.6	4.6	1.3	8.7	4.5	-3.59
		141	3.3	4.9	2.2	5.0	2.3	76.44
	Min	Cent	2.4	-1.1	-1.5	3.5	-1.1	-4.97
		138	0.5	-0.6	-1.5	1.9	-0.8	-2.88
		139	-0.4	-1.4	-0.9	2.9	-1.5	-74.54
		142	4.7	-0.7	-1.3	5.1	-0.8	-19.64
		141	0.9	-1.7	-1.8	1.2	-1.7	-5.93

		NODE	Vxx	Vyy
	Max	Cent	0.5	5.9
		138	7.6	7.8
		139	7.6	6.3
		142	-6.4	6.3
		141	-6.4	7.8
	Min	Cent	-14.8	-0.7
		138	-22.1	-2.4
		139	-22.1	-1.3
		142	-9.8	-1.3
		141	-9.8	-2.4

LC		NODE	Fxx	Fyy	Fxy	Fmax	Fmin	ANGLE
RC ENV~2	Max	Cent	0.5	2.7	0.6	2.7	0.2	-82.24
		138	1.0	2.5	0.6	2.6	0.5	-79.87
		139	1.0	2.9	0.6	2.9	0.7	-83.20
		142	0.0	2.9	0.6	2.9	-0.1	-82.06
		141	0.0	2.5	0.6	2.6	-0.1	-76.73
	Min	Cent	-0.8	0.9	-0.7	1.2	-0.9	71.99
		138	-1.3	0.5	-0.7	1.0	-1.4	56.30

139	-1.3	1.3	-0.7	1.5	-1.4	71.86
142	-0.3	1.3	-0.7	1.5	-0.5	68.57
141	-0.3	0.5	-0.7	0.9	-0.5	56.79

	NODE	Mxx	Myy	Mxy	Mmax	Mmin	ANGLE
Max	Cent	5.3	2.8	0.4	5.3	2.7	3.74
	138	3.5	4.1	0.8	4.2	3.3	-67.83
	139	9.7	3.7	0.2	9.7	3.7	0.16
	142	6.5	2.0	0.0	6.5	2.0	-3.09
	141	2.4	1.7	0.5	2.6	1.6	28.52
Min	Cent	3.6	1.9	-0.6	3.7	1.9	-18.29
	138	2.3	2.5	-0.3	3.1	1.7	41.91
	139	4.3	3.0	-0.4	4.3	2.9	-4.84
	142	5.4	0.7	-0.7	5.5	0.7	-4.82
	141	1.6	0.9	-0.6	1.8	0.6	25.41

	NODE	Vxx	Vyy
Max	Cent	-4.5	4.3
	138	-2.2	4.9
	139	-2.2	3.9
	142	-6.8	3.9
	141	-6.8	4.9
Min	Cent	-10.1	2.3
	138	-12.7	1.7
	139	-12.7	2.5
	142	-7.4	2.5
	141	-7.4	1.7

ELEM	MAT	SEC	LC	NODE	Fxx	Fyy	Fxy	Fmax	Fmin	ANGLE
114	1	1	SX (RS)	Cent	0.2	1.9	0.4	2.0	0.1	76.43
				140	0.5	2.6	0.4	2.7	0.4	79.08
				141	0.5	1.2	0.4	1.4	0.3	64.32
				144	0.1	1.2	0.4	1.3	-0.1	71.04
				143	0.1	2.6	0.4	2.7	-0.0	80.73

NODE	Mxx	Myy	Mxy	Mmax	Mmin	ANGLE
Cent	0.4	1.2	1.4	2.2	-0.7	53.35
140	0.4	1.6	1.3	2.4	-0.5	57.68
141	0.6	1.0	1.3	2.1	-0.6	49.55
144	0.8	1.4	1.4	2.5	-0.3	51.47
143	0.3	2.5	1.4	3.2	-0.3	64.52

NODE	Vxx	Vyy
Cent	1.1	3.3
140	1.0	6.4
141	1.0	0.8
144	1.2	0.8
143	1.2	6.4

LC	NODE	Fxx	Fyy	Fxy	Fmax	Fmin	ANGLE
SY (RS)	Cent	0.2	1.5	0.1	1.5	0.2	84.67
	140	0.4	1.4	0.1	1.4	0.4	83.32
	141	0.4	1.6	0.1	1.6	0.4	84.17
	144	0.0	1.6	0.1	1.6	0.0	85.58
	143	0.0	1.4	0.1	1.4	0.0	85.11

NODE	Mxx	Myy	Mxy	Mmax	Mmin	ANGLE
Cent	0.1	2.7	0.4	2.8	0.1	82.17
140	0.0	2.9	0.3	3.0	0.0	83.27
141	0.2	3.2	0.4	3.2	0.2	82.17
144	0.2	2.2	0.4	2.3	0.1	80.35
143	0.1	2.6	0.3	2.6	0.1	83.35

NODE	Vxx	Vyy
Cent	0.3	1.3
140	0.4	0.7
141	0.4	1.9
144	0.2	1.9
143	0.2	0.7

LC		NODE	Fxx	Fyy	Fxy	Fmax	Fmin	ANGLE
RC ENV~1	Max	Cent	0.1	3.7	0.4	3.8	0.1	-84.61
		140	0.4	4.4	0.4	4.4	0.4	-85.52
		141	0.4	3.2	0.4	3.2	0.3	-85.40
		144	0.0	3.2	0.4	3.2	-0.0	-85.08
		143	0.0	4.4	0.4	4.4	-0.0	-85.15
	Min	Cent	-0.3	-0.7	-0.5	-0.1	-1.0	-45.68
		140	-0.5	-1.4	-0.5	-0.3	-1.6	-24.03
		141	-0.5	-0.3	-0.5	-0.2	-0.8	-56.50
		144	-0.1	-0.3	-0.5	0.0	-0.5	-26.52
		143	-0.1	-1.4	-0.5	-0.0	-1.6	17.65

		NODE	Mxx	Myy	Mxy	Mmax	Mmin	ANGLE
	Max	Cent	1.5	4.0	1.3	4.0	1.4	84.75
		140	0.5	4.5	1.3	4.6	0.3	86.17
		141	2.8	4.7	1.3	4.8	1.9	82.50
		144	2.7	3.2	1.2	3.6	1.7	45.83
		143	0.4	3.4	1.2	3.8	0.1	70.20
	Min	Cent	0.5	-1.5	-1.5	0.8	-1.6	-11.11
		140	-0.2	-1.3	-1.4	0.2	-1.5	-14.72
		141	1.1	-1.6	-1.4	1.5	-1.7	-8.14
		144	0.8	-1.2	-1.5	1.5	-1.4	-10.07
		143	-0.3	-1.8	-1.5	0.0	-2.7	-13.10

		NODE	Vxx	Vyy
	Max	Cent	-1.7	4.5
		140	-1.8	7.9
		141	-1.8	3.0
		144	-1.5	3.0
		143	-1.5	7.9
	Min	Cent	-4.6	-2.0
		140	-4.7	-4.8
		141	-4.7	-0.9
		144	-4.5	-0.9
		143	-4.5	-4.8

LC		NODE	Fxx	Fyy	Fxy	Fmax	Fmin	ANGLE
RC ENV~2	Max	Cent	0.0	2.7	0.1	2.7	-0.0	-84.80
		140	0.2	3.1	0.1	3.1	0.0	-85.63
		141	0.2	2.3	0.1	2.3	0.1	-85.57
		144	-0.0	2.3	0.1	2.3	-0.1	-85.28
		143	-0.0	3.1	0.1	3.1	-0.1	-85.29
	Min	Cent	-0.2	0.1	-0.3	0.2	-0.2	52.29
		140	-0.3	-0.3	-0.3	0.2	-0.4	15.80
		141	-0.3	0.6	-0.3	0.6	-0.3	72.33
		144	-0.1	0.6	-0.3	0.6	-0.1	77.51
		143	-0.1	-0.3	-0.3	0.0	-0.4	24.17

		NODE	Mxx	Myy	Mxy	Mmax	Mmin	ANGLE
	Max	Cent	1.1	1.3	-0.1	1.5	1.0	-32.61
		140	0.3	2.0	-0.0	2.1	0.2	-71.42
		141	2.1	1.6	-0.0	2.2	1.6	-18.59
		144	2.0	1.0	-0.1	2.2	1.0	-19.31
		143	0.1	0.9	-0.1	1.0	0.1	-77.35
	Min	Cent	0.7	0.4	-0.8	1.2	-0.2	-62.49
		140	0.1	1.5	-0.7	1.6	0.0	-85.61
		141	1.5	0.7	-0.7	1.7	0.3	-32.15
		144	1.3	0.1	-0.8	1.5	-0.3	-27.55
		143	-0.1	-0.9	-0.8	0.4	-1.4	-37.63

		NODE	Vxx	Vyy
	Max	Cent	-2.4	2.9
		140	-2.5	4.7
		141	-2.5	1.3
		144	-2.3	1.3
		143	-2.3	4.7
	Min	Cent	-3.4	1.1
		140	-3.5	1.3
		141	-3.5	0.8
		144	-3.4	0.8

					143	-3.4	1.3			
ELEM	MAT	SEC	LC		NODE	Fxx	Fyy	Fxy	Fmax	Fmin	ANGLE
115	1	1	SX	(RS)	Cent	0.2	0.9	0.8	1.5	-0.4	56.80
					141	0.3	1.2	0.8	1.7	-0.2	58.92
					142	0.3	0.7	0.8	1.4	-0.4	52.65
					145	0.1	0.7	0.8	1.3	-0.5	54.92
					144	0.1	1.2	0.8	1.6	-0.4	60.80
					NODE	Mxx	Myy	Mxy	Mmax	Mmin	ANGLE
					Cent	1.3	0.9	1.7	2.8	-0.6	41.79
					141	0.8	1.0	1.7	2.6	-0.7	46.68
					142	1.1	0.3	1.9	2.7	-1.2	39.11
					145	2.2	0.9	1.8	3.4	-0.3	35.39
					144	1.2	1.5	1.5	2.9	-0.2	47.83
					NODE	Vxx	Vyy				
					Cent	1.3	0.8				
					141	0.7	0.8				
					142	0.7	1.0				
					145	2.0	1.0				
					144	2.0	0.8				
			LC		NODE	Fxx	Fyy	Fxy	Fmax	Fmin	ANGLE
			SY	(RS)	Cent	0.4	1.6	0.3	1.6	0.3	77.99
					141	0.7	1.5	0.3	1.6	0.6	74.50
					142	0.7	1.6	0.3	1.7	0.6	75.32
					145	0.1	1.6	0.3	1.6	0.1	80.19
					144	0.1	1.5	0.3	1.6	0.1	79.82
					NODE	Mxx	Myy	Mxy	Mmax	Mmin	ANGLE
					Cent	0.5	2.6	0.4	2.7	0.4	80.88
					141	0.6	3.3	0.5	3.3	0.5	80.38
					142	0.7	3.0	0.4	3.1	0.7	81.18
					145	0.3	2.1	0.3	2.2	0.2	81.77
					144	0.2	2.2	0.4	2.3	0.1	80.10
					NODE	Vxx	Vyy				
					Cent	0.3	1.8				
					141	0.3	1.9				
					142	0.3	1.6				
					145	0.2	1.6				
					144	0.2	1.9				
			LC		NODE	Fxx	Fyy	Fxy	Fmax	Fmin	ANGLE
			RC ENV~1	Max	Cent	0.3	2.9	0.9	2.9	0.2	-88.66
					141	0.5	3.1	0.9	3.1	0.4	-88.77
					142	0.5	2.8	0.9	2.8	0.4	81.39
					145	0.0	2.8	0.9	2.8	-0.0	82.68
					144	0.0	3.1	0.9	3.1	-0.0	-88.69
				Min	Cent	-0.5	-0.3	-0.7	-0.3	-0.8	-61.06
					141	-0.9	-0.3	-0.7	-0.3	-1.0	-75.21
					142	-0.9	-0.4	-0.7	-0.3	-0.9	-73.29
					145	-0.3	-0.4	-0.7	-0.1	-0.7	-32.26
					144	-0.3	-0.3	-0.7	-0.1	-0.8	-38.52
					NODE	Mxx	Myy	Mxy	Mmax	Mmin	ANGLE
				Max	Cent	6.0	4.2	1.6	6.1	3.9	-5.60
					141	3.3	4.8	1.6	4.9	2.3	80.34
					142	8.7	5.2	1.9	8.7	5.1	-2.00
					145	8.8	3.6	1.6	8.8	3.6	-4.49
					144	3.3	3.3	1.4	4.1	1.9	41.14
				Min	Cent	2.4	-1.1	-1.8	3.3	-1.1	-5.83
					141	0.9	-1.7	-1.7	1.2	-1.8	-9.59
					142	4.7	-0.8	-2.0	5.1	-0.8	-3.99
					145	3.4	-0.6	-1.9	4.4	-0.6	-26.73
					144	0.6	-1.2	-1.7	1.6	-1.7	-10.00

	NODE	Vxx	Vyy
Max	Cent	-5.6	2.9
	141	-6.4	3.0
	142	-6.4	2.8
	145	-4.7	2.8
	144	-4.7	3.0
Min	Cent	-9.8	-0.7
	141	-9.8	-0.9
	142	-9.8	-0.4
	145	-9.9	-0.4
	144	-9.9	-0.9

LC		NODE	Fxx	Fyy	Fxy	Fmax	Fmin	ANGLE
RC ENV~2	Max	Cent	-0.0	2.1	0.4	2.1	-0.1	-89.10
		141	-0.0	2.2	0.4	2.2	-0.2	-89.17
		142	-0.0	2.0	0.4	2.0	-0.2	-89.08
		145	0.0	2.0	0.4	2.0	-0.1	-89.01
		144	0.0	2.2	0.4	2.2	-0.1	-89.11
	Min	Cent	-0.3	0.7	-0.2	0.9	-0.3	65.38
		141	-0.4	0.5	-0.2	0.8	-0.4	62.40
		142	-0.4	0.8	-0.2	1.0	-0.4	68.38
		145	-0.2	0.8	-0.2	1.0	-0.3	67.91
		144	-0.2	0.5	-0.2	0.8	-0.3	61.73

	NODE	Mxx	Myy	Mxy	Mmax	Mmin	ANGLE
Max	Cent	4.5	1.6	-0.0	4.5	1.6	-5.07
	141	2.4	1.6	0.0	2.5	1.6	-17.59
	142	6.6	2.4	0.1	6.6	2.3	-1.70
	145	6.6	1.5	-0.1	6.6	1.5	-4.09
	144	2.4	1.1	-0.1	2.6	1.1	-19.18
Min	Cent	3.3	0.7	-0.9	3.4	0.4	-14.60
	141	1.6	0.7	-0.9	1.8	0.3	-25.31
	142	5.5	1.2	-1.0	5.6	1.1	-10.17
	145	4.8	0.3	-1.1	4.9	0.2	-9.45
	144	1.3	0.1	-0.9	1.6	-0.3	-28.25

	NODE	Vxx	Vyy
Max	Cent	-6.4	1.5
	141	-6.8	1.3
	142	-6.8	1.8
	145	-6.0	1.8
	144	-6.0	1.3
Min	Cent	-7.5	1.1
	141	-7.4	0.8
	142	-7.4	1.2
	145	-7.5	1.2
	144	-7.5	0.8

ELEM	MAT	SEC	LC		NODE	Fxx	Fyy	Fxy	Fmax	Fmin	ANGLE
116	1	1	SX (RS)		Cent	0.1	2.3	0.1	2.3	0.1	87.23
					143	0.1	3.2	0.1	3.2	0.1	88.00
					144	0.1	1.5	0.1	1.5	0.1	85.44
					147	0.1	1.5	0.1	1.5	0.1	85.54
					146	0.1	3.2	0.1	3.2	0.1	88.02

	NODE	Mxx	Myy	Mxy	Mmax	Mmin	ANGLE
	Cent	0.5	1.6	1.4	2.5	-0.4	56.70
	143	0.3	2.0	1.3	2.7	-0.4	61.08
	144	0.8	1.4	1.3	2.5	-0.3	52.22
	147	0.8	1.5	1.3	2.5	-0.2	52.82
	146	0.3	2.6	1.3	3.2	-0.3	65.43

	NODE	Vxx	Vyy
	Cent	1.2	2.4
	143	1.2	5.2
	144	1.2	0.5
	147	1.3	0.5
	146	1.3	5.2

LC		NODE	Fxx	Fyy	Fxy	Fmax	Fmin	ANGLE
SY (RS)		Cent	0.0	1.3	0.1	1.3	0.0	87.16
		143	0.1	1.5	0.1	1.5	0.1	87.32
		144	0.1	1.2	0.1	1.2	0.1	86.66
		147	0.1	1.2	0.1	1.2	0.1	86.62
		146	0.1	1.5	0.1	1.5	0.1	87.29

		NODE	Mxx	Myy	Mxy	Mmax	Mmin	ANGLE
		Cent	0.0	1.8	0.3	1.9	-0.0	81.21
		143	0.0	2.1	0.3	2.1	-0.0	82.82
		144	0.2	2.3	0.3	2.4	0.1	82.69
		147	0.1	1.4	0.3	1.4	0.1	77.76
		146	0.0	1.5	0.3	1.6	-0.0	80.40

		NODE	Vxx	Vyy
		Cent	0.1	1.6
		143	0.2	1.2
		144	0.2	2.1
		147	0.2	2.1
		146	0.2	1.2

LC		NODE	Fxx	Fyy	Fxy	Fmax	Fmin	ANGLE
RC ENV~1	Max	Cent	0.1	3.9	0.1	3.9	0.1	88.78
		143	0.1	4.9	0.1	4.9	0.1	89.05
		144	0.1	2.8	0.1	2.8	0.1	88.37
		147	0.1	2.8	0.1	2.8	0.1	88.29
		146	0.1	4.9	0.1	4.9	0.1	89.02
	Min	Cent	-0.2	-1.1	-0.1	-0.1	-1.1	-3.77
		143	-0.2	-1.9	-0.1	-0.2	-1.9	-2.21
		144	-0.2	-0.4	-0.1	-0.2	-0.4	-16.15
		147	-0.1	-0.4	-0.1	-0.1	-0.4	-11.79
		146	-0.1	-1.9	-0.1	-0.1	-1.9	-2.09

		NODE	Mxx	Myy	Mxy	Mmax	Mmin	ANGLE
	Max	Cent	1.5	2.8	1.0	3.2	0.9	61.57
		143	0.5	3.3	1.1	3.5	0.2	71.03
		144	2.6	3.2	1.1	3.4	1.7	45.39
		147	3.0	2.7	1.0	3.9	1.8	-30.58
		146	0.3	3.4	1.0	3.7	0.1	73.95
	Min	Cent	0.4	-0.8	-1.7	1.0	-1.9	-18.35
		143	-0.2	-0.9	-1.6	0.3	-2.1	-22.94
		144	0.8	-1.4	-1.6	1.5	-1.6	-10.40
		147	0.9	-0.3	-1.7	1.7	-1.5	-18.43
		146	-0.3	-1.8	-1.7	0.3	-2.9	-29.75

		NODE	Vxx	Vyy
	Max	Cent	-1.5	2.4
		143	-1.5	5.9
		144	-1.5	1.5
		147	-1.6	1.5
		146	-1.6	5.9
	Min	Cent	-4.7	-2.3
		143	-4.5	-4.5
		144	-4.5	-2.6
		147	-4.9	-2.6
		146	-4.9	-4.5

LC		NODE	Fxx	Fyy	Fxy	Fmax	Fmin	ANGLE
RC ENV~2	Max	Cent	0.0	2.7	0.1	2.8	0.0	88.73
		143	-0.0	3.5	0.1	3.5	-0.0	89.01
		144	-0.0	2.0	0.1	2.0	-0.0	88.33
		147	0.1	2.0	0.1	2.0	0.1	88.24
		146	0.1	3.5	0.1	3.5	0.1	88.98
	Min	Cent	-0.1	-0.1	0.0	-0.0	-0.1	52.17
		143	-0.1	-0.5	0.0	-0.1	-0.5	5.50
		144	-0.1	0.3	0.0	0.3	-0.1	85.39
		147	-0.1	0.3	0.0	0.3	-0.1	84.99
		146	-0.1	-0.5	0.0	-0.1	-0.5	5.02

		NODE	Mxx	Myy	Mxy	Mmax	Mmin	ANGLE

Max	Cent	1.1	1.2	-0.3	1.9	0.6	-36.65
	143	0.4	1.6	-0.3	1.9	0.1	-61.06
	144	2.0	0.9	-0.3	2.3	0.8	-22.15
	147	2.2	1.4	-0.3	2.8	1.1	-30.44
	146	0.1	0.9	-0.3	1.3	-0.1	-61.37
Min	Cent	0.7	0.1	-1.1	1.1	-0.7	-43.83
	143	0.1	0.9	-1.0	1.2	-0.4	-66.55
	144	1.3	-0.3	-1.0	1.5	-0.7	-26.43
	147	1.4	0.5	-1.2	1.7	-0.2	-30.75
	146	-0.1	-0.7	-1.2	0.5	-1.6	-50.19

	NODE	Vxx	Vyy
Max	Cent	-2.3	0.8
	143	-2.3	3.0
	144	-2.3	-0.5
	147	-2.3	-0.5
	146	-2.3	3.0
Min	Cent	-3.5	0.0
	143	-3.4	0.7
	144	-3.4	-1.7
	147	-3.6	-1.7
	146	-3.6	0.7

ELEM	MAT	SEC	LC	NODE	Fxx	Fyy	Fxy	Fmax	Fmin	ANGLE
117	1	1	SX (RS)	Cent	0.1	1.1	0.4	1.2	0.0	71.57
				144	0.1	1.4	0.4	1.5	0.0	76.02
				145	0.1	0.8	0.4	0.9	-0.1	66.38
				148	0.2	0.8	0.4	0.9	0.1	62.69
				147	0.2	1.4	0.4	1.5	0.1	74.53

	NODE	Mxx	Myy	Mxy	Mmax	Mmin	ANGLE
	Cent	1.7	1.3	1.5	3.0	-0.0	40.77
	144	1.2	1.5	1.5	2.9	-0.2	48.27
	145	2.1	0.9	1.5	3.1	-0.1	33.34
	148	2.3	1.1	1.5	3.3	0.1	33.53
	147	1.2	1.6	1.5	2.9	-0.1	48.79

	NODE	Vxx	Vyy
	Cent	2.1	0.3
	144	2.0	0.5
	145	2.0	0.5
	148	2.3	0.5
	147	2.3	0.5

LC	NODE	Fxx	Fyy	Fxy	Fmax	Fmin	ANGLE
SY (RS)	Cent	0.0	1.1	0.3	1.2	-0.1	73.20
	144	0.3	1.2	0.3	1.3	0.2	71.21
	145	0.3	1.0	0.3	1.1	0.2	66.99
	148	0.3	1.0	0.3	1.1	0.2	66.52
	147	0.3	1.2	0.3	1.3	0.2	70.88

	NODE	Mxx	Myy	Mxy	Mmax	Mmin	ANGLE
	Cent	0.1	1.8	0.3	1.9	0.1	81.72
	144	0.2	2.3	0.3	2.4	0.2	82.35
	145	0.3	2.3	0.2	2.3	0.3	83.12
	148	0.2	1.4	0.2	1.4	0.2	79.28
	147	0.1	1.4	0.3	1.4	0.1	77.85

	NODE	Vxx	Vyy
	Cent	0.1	1.9
	144	0.2	2.1
	145	0.2	1.8
	148	0.3	1.8
	147	0.3	2.1

LC		NODE	Fxx	Fyy	Fxy	Fmax	Fmin	ANGLE
RC ENV~1	Max	Cent	-0.0	2.5	0.6	2.5	-0.1	81.06

```
                                   144        0.2        2.7        0.6        2.8        0.0       82.75
                                   145        0.2        2.2        0.6        2.3        0.0       79.87
                                   148        0.1        2.2        0.6        2.3       -0.0       80.73
                                   147        0.1        2.7        0.6        2.8       -0.0       83.24
                            Min   Cent       -0.6       -0.1       -0.2        0.0       -0.6      -62.85
                                   144       -0.4       -0.4       -0.2       -0.1       -0.5      -30.37
                                   145       -0.4        0.0       -0.2        0.1       -0.5      -74.06
                                   148       -0.7        0.0       -0.2        0.1       -0.8      -76.41
                                   147       -0.7       -0.4       -0.2       -0.3       -0.8      -49.44

                                  NODE        Mxx        Myy        Mxy       Mmax       Mmin      ANGLE
                            ---- ------ ---------- ---------- ---------- ---------- ---------- ----------
                            Max   Cent        6.3        3.2        1.2        6.6        3.2     -12.59
                                   144        3.2        3.3        1.3        4.0        1.9      40.19
                                   145        8.8        3.8        1.3        8.9        3.8      -6.52
                                   148        9.7        3.1        1.2        9.9        3.1      -9.02
                                   147        3.6        2.9        1.1        4.6        2.0     -29.10
                            Min   Cent        2.1       -0.5       -1.8        3.1       -0.9     -30.42
                                   144        0.5       -1.4       -1.8        1.6       -1.9     -10.35
                                   145        3.4       -0.8       -1.7        4.2       -0.8     -25.06
                                   148        3.6        0.4       -1.7        4.4       -0.1     -24.84
                                   147        0.7       -0.3       -1.9        1.9       -1.8     -17.45

                                  NODE        Vxx        Vyy
                            ---- ------ ---------- ----------
                            Max   Cent       -4.8        1.4
                                   144       -4.7        1.5
                                   145       -4.7        1.4
                                   148       -4.9        1.4
                                   147       -4.9        1.5
                            Min   Cent      -10.5       -2.4
                                   144       -9.9       -2.6
                                   145       -9.9       -2.2
                                   148      -11.0       -2.2
                                   147      -11.0       -2.6

                     LC          NODE        Fxx        Fyy        Fxy       Fmax       Fmin      ANGLE
                -------- ---- ------ ---------- ---------- ---------- ---------- ---------- ----------
                RC ENV~2  Max   Cent       -0.0        1.8        0.3        1.8       -0.1      81.03
                                   144       -0.0        2.0        0.3        2.0       -0.1      82.59
                                   145       -0.0        1.6        0.3        1.7       -0.1      79.89
                                   148       -0.1        1.6        0.3        1.7       -0.1      80.73
                                   147       -0.1        2.0        0.3        2.0       -0.1      83.08
                            Min   Cent       -0.4        0.5        0.1        0.6       -0.4      76.40
                                   144       -0.3        0.3        0.1        0.4       -0.4      70.71
                                   145       -0.3        0.7        0.1        0.8       -0.4      79.25
                                   148       -0.5        0.7        0.1        0.8       -0.5      79.62
                                   147       -0.5        0.3        0.1        0.4       -0.5      71.76

                                  NODE        Mxx        Myy        Mxy       Mmax       Mmin      ANGLE
                            ---- ------ ---------- ---------- ---------- ---------- ---------- ----------
                            Max   Cent        4.7        1.4       -0.3        4.9        1.4     -11.87
                                   144        2.4        1.0       -0.3        2.7        0.9     -21.44
                                   145        6.6        1.5       -0.2        6.6        1.5      -5.97
                                   148        7.2        1.8       -0.3        7.4        1.8      -8.36
                                   147        2.6        1.5       -0.3        3.3        1.2     -28.85
                            Min   Cent        3.1        0.4       -1.1        3.2        0.1     -12.55
                                   144        1.3       -0.2       -1.1        1.6       -0.7     -27.46
                                   145        4.8        0.3       -1.0        4.8        0.2      -7.48
                                   148        5.0        0.9       -1.2        5.0        0.6      -7.20
                                   147        1.4        0.5       -1.3        1.7       -0.2     -30.23

                                  NODE        Vxx        Vyy
                            ---- ------ ---------- ----------
                            Max   Cent       -6.1       -0.3
                                   144       -6.0       -0.5
                                   145       -6.0       -0.1
                                   148       -6.2       -0.1
                                   147       -6.2       -0.5
                            Min   Cent       -7.9       -1.3
                                   144       -7.5       -1.7
                                   145       -7.5       -1.0
                                   148       -8.3       -1.0
                                   147       -8.3       -1.7

  ELEM    MAT    SEC         LC         NODE        Fxx        Fyy        Fxy       Fmax       Fmin      ANGLE
------ ------ ------ -------- ---- ------ ---------- ---------- ---------- ---------- ---------- ----------
```

118	1	1	SX (RS)	Cent	0.2	2.2	0.3	2.3	0.2	81.41
				146	0.1	3.0	0.3	3.0	0.1	83.91
				147	0.1	1.6	0.3	1.6	0.0	78.49
				150	0.5	1.6	0.3	1.6	0.4	74.80
				149	0.5	3.0	0.3	3.0	0.5	82.96

	NODE	Mxx	Myy	Mxy	Mmax	Mmin	ANGLE
	Cent	0.4	1.6	1.3	2.5	-0.5	57.45
	146	0.3	2.3	1.3	2.9	-0.3	63.52
	147	0.8	1.7	1.3	2.7	-0.1	54.52
	150	0.6	1.5	1.3	2.4	-0.3	54.70
	149	0.4	2.2	1.3	2.8	-0.3	63.25

	NODE	Vxx	Vyy
	Cent	1.2	2.6
	146	1.3	5.6
	147	1.3	0.6
	150	1.1	0.6
	149	1.1	5.6

LC		NODE	Fxx	Fyy	Fxy	Fmax	Fmin	ANGLE
SY (RS)		Cent	0.3	1.3	0.2	1.3	0.2	80.42
		146	0.0	1.5	0.2	1.5	-0.0	83.31
		147	0.0	1.3	0.2	1.3	-0.0	82.19
		150	0.5	1.3	0.2	1.3	0.5	77.72
		149	0.5	1.5	0.2	1.5	0.5	80.22

	NODE	Mxx	Myy	Mxy	Mmax	Mmin	ANGLE
	Cent	0.1	1.0	0.3	1.1	-0.0	70.39
	146	0.1	1.1	0.3	1.2	0.0	75.98
	147	0.1	1.4	0.3	1.5	0.0	76.17
	150	0.2	0.8	0.4	1.0	0.0	61.96
	149	0.1	0.9	0.3	1.0	-0.1	70.49

	NODE	Vxx	Vyy
	Cent	0.3	1.8
	146	0.2	1.3
	147	0.2	2.4
	150	0.4	2.4
	149	0.4	1.3

LC		NODE	Fxx	Fyy	Fxy	Fmax	Fmin	ANGLE
RC ENV~1	Max	Cent	0.1	3.2	0.7	3.3	0.0	80.32
		146	0.1	4.1	0.7	4.2	-0.0	81.18
		147	0.1	2.4	0.7	2.5	-0.0	78.99
		150	0.2	2.4	0.7	2.5	0.2	78.22
		149	0.2	4.1	0.7	4.2	0.2	82.79
	Min	Cent	-0.5	-1.3	-0.1	-0.4	-1.3	-8.96
		146	-0.1	-1.9	-0.1	-0.1	-1.9	-4.58
		147	-0.1	-0.7	-0.1	-0.1	-0.7	-13.63
		150	-1.0	-0.7	-0.1	-0.6	-1.2	-53.34
		149	-1.0	-1.9	-0.1	-0.7	-1.9	-7.08

	NODE	Mxx	Myy	Mxy	Mmax	Mmin	ANGLE
Max	Cent	1.7	3.3	0.7	4.3	1.1	-47.14
	146	0.7	4.0	0.8	4.5	0.4	-59.87
	147	2.8	2.7	0.8	4.1	1.8	-30.68
	150	3.6	4.1	0.6	6.3	2.4	-47.01
	149	0.4	3.8	0.6	3.9	0.2	79.60
Min	Cent	0.6	0.0	-2.5	1.7	-1.6	-42.77
	146	-0.1	-0.6	-2.2	1.1	-2.2	-52.79
	147	0.8	-0.7	-2.3	1.9	-1.9	-21.13
	150	1.4	0.9	-2.5	2.7	-0.8	-43.31
	149	-0.3	-0.6	-2.4	1.3	-2.4	-56.03

	NODE	Vxx	Vyy
Max	Cent	-1.9	1.4
	146	-1.6	5.7
	147	-1.6	-0.1

		150	-2.2	-0.1
		149	-2.2	5.7
	Min	Cent	-5.3	-3.8
		146	-4.9	-5.4
		147	-4.9	-6.8
		150	-5.8	-6.8
		149	-5.8	-5.4

LC		NODE	Fxx	Fyy	Fxy	Fmax	Fmin	ANGLE
RC ENV~2	Max	Cent	0.0	2.3	0.5	2.4	-0.1	80.40
		146	-0.0	2.9	0.5	3.0	-0.1	81.21
		147	-0.0	1.7	0.5	1.8	-0.1	75.78
		150	0.1	1.7	0.5	1.8	0.1	79.43
		149	0.1	2.9	0.5	3.0	-0.1	82.80
	Min	Cent	-0.4	-0.1	-0.1	0.0	-0.5	-31.08
		146	-0.1	-0.4	-0.1	-0.1	-0.4	7.66
		147	-0.1	0.3	-0.1	0.3	-0.2	-80.89
		150	-0.7	0.3	-0.1	0.3	-0.8	-76.26
		149	-0.7	-0.4	-0.1	-0.0	-0.8	4.28

		NODE	Mxx	Myy	Mxy	Mmax	Mmin	ANGLE
	Max	Cent	1.3	2.0	-0.5	3.1	0.6	-47.95
		146	0.5	2.5	-0.5	3.2	0.1	-60.83
		147	2.1	1.1	-0.5	3.0	0.7	-30.64
		150	2.6	3.1	-0.6	4.5	1.6	-47.45
		149	0.0	1.6	-0.6	2.1	-0.2	-57.59
	Min	Cent	0.8	1.1	-1.7	1.7	-0.4	-53.76
		146	0.2	1.2	-1.5	1.5	-0.4	-66.30
		147	1.3	-0.0	-1.6	1.6	-0.8	-28.09
		150	1.7	1.9	-1.7	2.5	0.8	-49.22
		149	-0.2	0.6	-1.7	1.5	-1.4	-65.28

		NODE	Vxx	Vyy
	Max	Cent	-2.6	-0.9
		146	-2.3	2.7
		147	-2.3	-2.4
		150	-2.8	-2.4
		149	-2.8	2.7
	Min	Cent	-4.0	-1.2
		146	-3.6	0.0
		147	-3.6	-4.8
		150	-4.3	-4.8
		149	-4.3	0.0

ELEM	MAT	SEC	LC		NODE	Fxx	Fyy	Fxy	Fmax	Fmin	ANGLE
119	1	1	SX (RS)		Cent	0.3	1.2	0.6	1.5	0.0	64.14
					147	0.3	1.6	0.6	1.8	0.0	69.15
					148	0.3	0.9	0.6	1.3	-0.1	59.31
					151	0.4	0.9	0.6	1.3	-0.0	57.37
					150	0.4	1.6	0.6	1.8	0.1	68.03

		NODE	Mxx	Myy	Mxy	Mmax	Mmin	ANGLE
		Cent	1.4	1.3	1.6	3.0	-0.2	44.37
		147	1.2	1.8	1.5	3.0	-0.0	50.51
		148	2.3	1.0	1.7	3.5	-0.1	34.39
		151	1.1	0.9	1.8	2.8	-0.8	43.54
		150	1.0	1.6	1.6	2.9	-0.3	50.70

		NODE	Vxx	Vyy
		Cent	1.4	0.2
		147	2.3	0.6
		148	2.3	0.3
		151	0.5	0.3
		150	0.5	0.6

LC		NODE	Fxx	Fyy	Fxy	Fmax	Fmin	ANGLE
SY (RS)		Cent	0.4	1.3	0.3	1.4	0.3	72.35
		147	0.1	1.3	0.3	1.4	0.1	75.64
		148	0.1	1.4	0.3	1.5	0.1	77.16

151	0.7	1.4	0.3	1.5	0.6	69.33
150	0.7	1.3	0.3	1.4	0.6	65.70

NODE	Mxx	Myy	Mxy	Mmax	Mmin	ANGLE
Cent	0.4	1.0	0.3	1.1	0.3	67.98
147	0.1	1.4	0.3	1.5	0.0	76.39
148	0.2	1.6	0.2	1.6	0.2	81.89
151	0.7	0.8	0.3	1.1	0.5	50.19
150	0.7	0.8	0.4	1.1	0.3	48.46

NODE	Vxx	Vyy
Cent	0.1	2.3
147	0.3	2.4
148	0.3	2.1
151	0.2	2.1
150	0.2	2.4

LC		NODE	Fxx	Fyy	Fxy	Fmax	Fmin	ANGLE
RC ENV~1	Max	Cent	0.2	2.2	1.3	2.6	-0.0	69.08
		147	0.0	2.4	1.3	2.8	-0.1	69.51
		148	0.0	2.3	1.3	2.5	-0.1	69.21
		151	0.4	2.3	1.3	2.5	0.2	72.24
		150	0.4	2.4	1.3	2.8	0.2	70.59
	Min	Cent	-0.8	-0.4	-0.2	-0.4	-1.3	79.41
		147	-0.7	-0.7	-0.2	-0.4	-1.2	-32.21
		148	-0.7	-0.5	-0.2	-0.4	-1.2	16.00
		151	-1.0	-0.5	-0.2	-0.5	-1.4	84.00
		150	-1.0	-0.7	-0.2	-0.5	-1.4	-40.30

	NODE	Mxx	Myy	Mxy	Mmax	Mmin	ANGLE
Max	Cent	6.7	3.2	1.0	7.8	2.9	-24.53
	147	3.5	2.9	1.0	4.6	2.0	-28.65
	148	9.6	3.1	1.2	10.1	3.1	-12.71
	151	9.3	3.6	1.2	10.4	3.5	-22.27
	150	4.4	4.3	0.9	7.2	2.8	-43.31
Min	Cent	2.6	0.6	-2.6	3.9	-0.8	-16.10
	147	0.6	-0.7	-2.3	2.0	-2.1	-19.29
	148	3.5	-0.1	-2.4	4.6	-0.6	-26.99
	151	5.0	1.7	-3.0	5.6	0.4	-13.61
	150	1.4	0.9	-2.9	2.8	-1.1	-45.77

	NODE	Vxx	Vyy
Max	Cent	-5.6	-0.1
	147	-4.9	-0.1
	148	-4.9	-0.0
	151	-6.2	-0.0
	150	-6.2	-0.1
Min	Cent	-10.1	-5.9
	147	-11.0	-6.8
	148	-11.0	-5.1
	151	-9.2	-5.1
	150	-9.2	-6.8

LC		NODE	Fxx	Fyy	Fxy	Fmax	Fmin	ANGLE
RC ENV~2	Max	Cent	-0.1	1.5	0.9	1.9	-0.1	69.37
		147	-0.1	1.6	0.9	2.0	-0.1	69.74
		148	-0.1	1.5	0.9	1.8	-0.1	69.50
		151	-0.1	1.5	0.9	1.8	-0.1	70.29
		150	-0.1	1.6	0.9	2.0	-0.1	70.52
	Min	Cent	-0.6	0.4	-0.1	0.5	-0.9	-82.75
		147	-0.5	0.3	-0.1	0.3	-0.8	-79.76
		148	-0.5	0.6	-0.1	0.6	-0.9	-84.54
		151	-0.6	0.6	-0.1	0.6	-1.0	-84.41
		150	-0.6	0.3	-0.1	0.3	-1.0	-79.32

	NODE	Mxx	Myy	Mxy	Mmax	Mmin	ANGLE
Max	Cent	5.0	2.1	-0.5	5.7	1.8	-23.73
	147	2.6	1.2	-0.5	3.3	0.9	-28.48
	148	7.2	1.5	-0.4	7.5	1.5	-11.97
	151	7.0	2.7	-0.5	7.7	2.5	-21.19

150	3.3	3.2	-0.6	5.2	1.8	-43.59
Min Cent	3.5	1.3	-1.8	3.6	0.7	-14.24
147	1.4	0.0	-1.6	1.7	-0.7	-27.36
148	4.9	0.5	-1.6	5.0	0.2	-6.31
151	5.6	2.3	-2.0	5.7	1.7	-8.10
150	2.0	2.0	-2.0	2.6	0.9	-45.64

	NODE	Vxx	Vyy
Max	Cent	-6.3	-2.2
	147	-6.2	-2.4
	148	-6.2	-1.8
	151	-6.5	-1.8
	150	-6.5	-2.4
Min	Cent	-7.6	-4.2
	147	-8.3	-4.8
	148	-8.3	-3.7
	151	-7.0	-3.7
	150	-7.0	-4.8

ELEM	MAT	SEC	LC	NODE	Fxx	Fyy	Fxy	Fmax	Fmin	ANGLE
120	1	1	SX (RS)	Cent	0.1	1.9	1.1	2.4	-0.4	64.88
				149	0.7	2.2	1.1	2.8	0.1	62.79
				150	0.7	2.0	1.1	2.6	0.0	60.46
				153	0.7	2.0	1.1	2.6	0.1	60.26
				152	0.7	2.2	1.1	2.8	0.1	62.61

	NODE	Mxx	Myy	Mxy	Mmax	Mmin	ANGLE
	Cent	0.4	1.1	1.1	1.8	-0.4	54.42
	149	0.1	1.3	1.0	1.9	-0.5	60.50
	150	0.7	1.9	1.1	2.6	0.0	58.99
	153	1.6	2.0	1.1	3.0	0.7	49.38
	152	0.4	2.3	1.0	2.7	-0.0	67.19

	NODE	Vxx	Vyy
	Cent	0.7	5.0
	149	1.1	5.3
	150	1.1	5.5
	153	2.2	5.5
	152	2.2	5.3

LC	NODE	Fxx	Fyy	Fxy	Fmax	Fmin	ANGLE
SY (RS)	Cent	0.1	1.4	0.6	1.6	-0.1	68.94
	149	0.5	2.4	0.6	2.5	0.3	74.30
	150	0.5	1.8	0.6	2.0	0.3	69.08
	153	0.7	1.8	0.6	2.0	0.5	66.50
	152	0.7	2.4	0.6	2.6	0.5	72.74

	NODE	Mxx	Myy	Mxy	Mmax	Mmin	ANGLE
	Cent	0.4	1.1	0.4	1.3	0.2	68.68
	149	0.1	1.2	0.5	1.3	-0.0	69.53
	150	0.2	0.6	0.3	0.8	0.0	59.30
	153	1.3	2.1	0.2	2.1	1.3	75.53
	152	0.3	1.1	0.3	1.2	0.2	71.98

	NODE	Vxx	Vyy
	Cent	1.3	1.1
	149	0.4	1.0
	150	0.4	2.8
	153	2.1	2.8
	152	2.1	1.0

LC		NODE	Fxx	Fyy	Fxy	Fmax	Fmin	ANGLE
RC ENV~1	Max	Cent	0.1	2.5	2.1	3.3	-0.1	63.68
		149	0.3	2.5	2.1	3.2	-0.1	60.97
		150	0.3	3.3	2.1	4.1	-0.1	68.95
		153	1.2	3.3	2.1	4.5	0.5	58.27
		152	1.2	2.5	2.1	3.3	0.4	56.52
	Min	Cent	-0.2	-1.4	-0.6	-0.2	-1.6	-6.57

149	-1.4	-2.3	-0.6	-0.9	-3.0	-3.02
150	-1.4	-0.9	-0.6	-0.7	-2.2	-64.18
153	-0.5	-0.9	-0.6	-0.4	-1.3	-14.77
152	-0.5	-2.3	-0.6	-0.5	-2.3	-2.38

	NODE	Mxx	Myy	Mxy	Mmax	Mmin	ANGLE
Max	Cent	1.4	4.7	0.2	6.3	1.2	-60.15
	149	0.8	5.9	0.4	6.8	0.4	-69.24
	150	3.5	4.1	0.3	6.5	2.6	-44.41
	153	3.2	6.1	0.1	7.6	3.2	-60.89
	152	0.1	5.3	0.2	5.3	0.1	87.99
Min	Cent	0.5	1.8	-2.9	2.5	-0.8	-58.97
	149	0.2	1.6	-2.3	2.3	-0.8	-63.61
	150	1.3	0.3	-3.1	2.9	-1.3	-38.37
	153	-0.1	1.5	-3.5	2.3	-1.6	-58.01
	152	-0.9	0.8	-2.7	2.0	-2.1	-56.43

	NODE	Vxx	Vyy
Max	Cent	-2.0	3.4
	149	-2.2	4.8
	150	-2.2	2.8
	153	-1.0	2.8
	152	-1.0	4.8
Min	Cent	-5.0	-6.6
	149	-5.8	-5.7
	150	-5.8	-8.3
	153	-5.3	-8.3
	152	-5.3	-5.7

LC		NODE	Fxx	Fyy	Fxy	Fmax	Fmin	ANGLE
RC ENV~2	Max	Cent	-0.0	1.1	1.5	2.1	-0.1	55.82
		149	0.1	0.2	1.5	1.0	-0.1	52.83
		150	0.1	2.3	1.5	2.9	-0.0	69.12
		153	0.8	2.3	1.5	3.2	0.0	58.58
		152	0.8	0.2	1.5	1.9	-0.0	35.95
	Min	Cent	-0.1	0.1	-0.3	0.2	-1.1	-76.43
		149	-1.0	-0.2	-0.3	0.1	-2.1	-58.89
		150	-1.0	0.1	-0.3	0.4	-1.5	-44.25
		153	-0.2	0.1	-0.3	0.3	-0.3	-59.32
		152	-0.2	-0.2	-0.3	0.1	-1.2	-67.41

	NODE	Mxx	Myy	Mxy	Mmax	Mmin	ANGLE
Max	Cent	1.0	3.5	-0.8	4.6	0.6	-61.06
	149	0.5	4.3	-0.6	4.8	0.1	-70.07
	150	2.6	2.8	-0.8	4.7	1.2	-44.77
	153	2.2	4.5	-1.0	5.5	1.7	-61.54
	152	-0.2	3.1	-0.7	3.8	-0.4	-67.38
Min	Cent	0.9	2.9	-2.0	3.2	-0.2	-70.68
	149	0.3	2.8	-1.6	2.9	-0.1	-77.75
	150	1.7	1.5	-2.1	2.5	0.1	-43.01
	153	1.2	3.5	-2.4	4.0	-0.2	-66.19
	152	-0.7	3.0	-1.9	3.2	-1.4	-77.94

	NODE	Vxx	Vyy
Max	Cent	-3.2	-0.4
	149	-2.8	1.9
	150	-2.8	-2.1
	153	-2.9	-2.1
	152	-2.9	1.9
Min	Cent	-3.7	-2.8
	149	-4.3	-0.6
	150	-4.3	-5.3
	153	-3.9	-5.3
	152	-3.9	-0.6

ELEM	MAT	SEC	LC		NODE	Fxx	Fyy	Fxy	Fmax	Fmin	ANGLE
121	1	1	SX (RS)		Cent	1.4	1.4	1.0	2.4	0.4	45.65
					150	0.4	1.8	1.0	2.4	-0.2	62.89
					151	0.4	1.0	1.0	1.8	-0.4	53.86
					154	2.4	1.0	1.0	3.0	0.5	27.52
					153	2.4	1.8	1.0	3.2	1.1	36.71

	NODE	Mxx	Myy	Mxy	Mmax	Mmin	ANGLE
	Cent	2.3	1.1	1.6	3.4	-0.0	34.01
	150	1.0	2.0	2.0	3.6	-0.5	51.69
	151	1.1	0.8	1.1	2.1	-0.2	41.86
	154	9.6	2.2	1.0	9.8	2.1	7.33
	153	2.3	2.1	1.9	4.1	0.4	43.31

	NODE	Vxx	Vyy
	Cent	10.3	2.8
	150	0.5	5.5
	151	0.5	0.2
	154	20.1	0.2
	153	20.1	5.5

LC		NODE	Fxx	Fyy	Fxy	Fmax	Fmin	ANGLE
SY (RS)		Cent	0.9	2.5	0.2	2.5	0.9	83.31
		150	0.4	1.7	0.2	1.7	0.4	81.87
		151	0.4	3.3	0.2	3.3	0.4	86.43
		154	1.4	3.3	0.2	3.4	1.4	84.54
		153	1.4	1.7	0.2	1.8	1.3	61.35

	NODE	Mxx	Myy	Mxy	Mmax	Mmin	ANGLE
	Cent	0.9	1.1	0.5	1.5	0.5	52.76
	150	0.7	0.6	0.4	1.1	0.2	42.86
	151	0.6	1.1	0.5	1.4	0.3	57.64
	154	3.2	2.5	0.5	3.5	2.2	28.94
	153	1.0	1.9	0.4	2.1	0.9	68.06

	NODE	Vxx	Vyy
	Cent	3.5	3.9
	150	0.2	2.8
	151	0.2	5.4
	154	6.9	5.4
	153	6.9	2.8

LC		NODE	Fxx	Fyy	Fxy	Fmax	Fmin	ANGLE
RC ENV~1	Max	Cent	0.6	3.3	2.1	3.5	0.0	77.96
		150	0.2	2.7	2.1	3.7	-0.0	65.22
		151	0.2	4.2	2.1	4.3	0.0	80.38
		154	1.2	4.2	2.1	4.3	0.4	80.17
		153	1.2	2.7	2.1	3.7	0.3	58.02
	Min	Cent	-2.9	-1.6	-0.5	-1.3	-3.6	48.84
		150	-0.9	-0.9	-0.5	-0.4	-1.8	42.56
		151	-0.9	-2.5	-0.5	-0.6	-2.5	10.50
		154	-4.9	-2.5	-0.5	-2.2	-5.5	51.77
		153	-4.9	-0.9	-0.5	-0.8	-5.4	-79.97

	NODE	Mxx	Myy	Mxy	Mmax	Mmin	ANGLE
Max	Cent	10.3	5.3	0.6	12.2	4.4	-27.38
	150	4.4	4.3	0.8	8.3	2.9	-42.33
	151	9.0	3.0	0.9	9.2	3.0	-9.63
	154	25.8	10.4	0.5	26.1	10.1	-7.61
	153	4.4	6.3	0.4	9.1	4.3	-53.84
Min	Cent	3.1	2.2	-3.6	5.3	0.1	-40.23
	150	1.3	0.3	-4.4	3.2	-2.5	-45.58
	151	4.9	0.8	-1.6	5.3	0.7	-17.67
	154	1.9	2.9	-2.1	4.1	1.0	-56.68
	153	-0.3	1.6	-4.9	3.3	-2.8	-50.59

	NODE	Vxx	Vyy
Max	Cent	-1.3	0.3
	150	-6.2	2.8
	151	-6.2	0.9
	154	3.6	0.9
	153	3.6	2.8
Min	Cent	-24.8	-8.1
	150	-9.2	-8.3
	151	-9.2	-10.6

		154	-40.6	-10.6		
		153	-40.6	-8.3		

LC		NODE	Fxx	Fyy	Fxy	Fmax	Fmin	ANGLE
RC ENV~2	Max	Cent	0.2	1.6	1.5	2.1	0.1	70.59
		150	-0.1	1.9	1.5	2.6	-0.2	65.44
		151	-0.1	1.4	1.5	2.1	-0.1	61.78
		154	0.5	1.4	1.5	1.8	0.3	74.71
		153	0.5	1.9	1.5	2.3	0.0	75.62
	Min	Cent	-2.0	0.4	-0.2	0.5	-2.5	-55.56
		150	-0.6	0.1	-0.2	0.3	-1.3	-58.46
		151	-0.6	0.6	-0.2	0.7	-1.4	-73.92
		154	-3.4	0.6	-0.2	0.7	-3.8	84.89
		153	-3.4	0.1	-0.2	0.4	-3.8	-87.65

		NODE	Mxx	Myy	Mxy	Mmax	Mmin	ANGLE
	Max	Cent	7.6	3.9	-0.8	8.9	3.0	-26.84
		150	3.2	2.9	-0.9	6.0	1.1	-42.53
		151	6.8	1.9	-0.2	6.9	1.9	-8.74
		154	18.7	7.7	-0.5	18.9	7.5	-7.21
		153	3.0	4.7	-1.2	6.6	2.3	-54.26
	Min	Cent	4.4	3.0	-2.5	4.8	2.4	-25.10
		150	1.9	1.6	-3.0	2.6	-0.1	-40.23
		151	5.5	1.3	-1.0	5.6	1.1	-7.39
		154	7.2	4.3	-1.4	7.4	4.1	-13.86
		153	1.7	3.6	-3.4	4.5	-0.6	-60.33

		NODE	Vxx	Vyy
	Max	Cent	-7.1	-3.6
		150	-6.5	-2.1
		151	-6.5	-4.1
		154	-7.7	-4.1
		153	-7.7	-2.1
	Min	Cent	-18.1	-5.8
		150	-7.0	-5.3
		151	-7.0	-7.6
		154	-29.2	-7.6
		153	-29.2	-5.3

ELEM	MAT	SEC	LC		NODE	Fxx	Fyy	Fxy	Fmax	Fmin	ANGLE
122	1	1	SX (RS)		Cent	0.7	2.2	0.6	2.5	0.5	70.55
					152	0.3	2.7	0.6	2.9	0.2	76.27
					153	0.3	1.8	0.6	2.0	0.1	69.81
					155	1.1	1.8	0.6	2.2	0.7	59.78
					18	1.1	2.7	0.6	2.9	0.9	71.38

		NODE	Mxx	Myy	Mxy	Mmax	Mmin	ANGLE
		Cent	0.9	2.1	0.7	2.4	0.6	64.46
		152	0.4	1.8	0.7	2.1	0.1	66.30
		153	1.1	1.4	0.7	2.0	0.5	50.34
		155	2.4	4.1	0.7	4.4	2.2	70.50
		18	0.4	2.8	0.7	3.0	0.2	75.88

		NODE	Vxx	Vyy
		Cent	3.2	5.0
		152	2.2	2.7
		153	2.2	8.8
		155	4.3	8.8
		18	4.3	2.7

LC		NODE	Fxx	Fyy	Fxy	Fmax	Fmin	ANGLE
SY (RS)		Cent	0.3	1.9	0.1	1.9	0.3	87.10
		152	0.5	2.1	0.1	2.1	0.5	86.95
		153	0.5	2.2	0.1	2.2	0.5	87.09
		155	0.3	2.2	0.1	2.2	0.3	87.49
		18	0.3	2.1	0.1	2.1	0.3	87.38

		NODE	Mxx	Myy	Mxy	Mmax	Mmin	ANGLE

Cent	0.3	1.9	0.5	2.1	0.2	73.13
152	0.4	2.0	0.7	2.3	0.1	69.35
153	1.3	1.7	0.7	2.2	0.7	53.38
155	1.3	6.7	0.7	6.8	1.2	83.07
18	0.5	1.5	0.6	1.8	0.2	64.79

	NODE	Vxx	Vyy
	Cent	1.4	5.9
	152	2.1	2.7
	153	2.1	14.4
	155	1.3	14.4
	18	1.3	2.7

LC		NODE	Fxx	Fyy	Fxy	Fmax	Fmin	ANGLE
RC ENV~1	Max	Cent	1.2	2.0	1.2	2.5	0.4	60.17
		152	0.6	2.2	1.2	2.6	0.5	67.59
		153	0.6	2.2	1.2	2.3	0.6	77.69
		155	1.8	2.2	1.2	2.5	0.7	49.90
		18	1.8	2.2	1.2	2.8	0.9	56.31
	Min	Cent	-0.5	-2.5	-0.3	-0.4	-2.6	-9.45
		152	-0.4	-3.2	-0.3	-0.4	-3.3	4.94
		153	-0.4	-2.2	-0.3	-0.4	-2.2	6.07
		155	-0.7	-2.2	-0.3	-0.6	-2.2	-16.16
		18	-0.7	-3.2	-0.3	-0.7	-3.3	-7.71

	NODE	Mxx	Myy	Mxy	Mmax	Mmin	ANGLE
Max	Cent	1.5	7.4	0.3	7.9	1.5	-74.40
	152	0.3	7.1	0.2	7.6	0.2	-75.31
	153	3.2	10.2	-0.0	10.9	3.2	-73.86
	155	3.3	11.5	0.4	11.5	3.3	87.81
	18	0.2	6.6	0.6	6.6	0.2	85.00
Min	Cent	-0.3	2.2	-1.9	2.6	-0.7	-69.41
	152	-0.6	1.5	-2.1	2.1	-1.2	-64.66
	153	0.6	3.6	-2.5	4.2	0.1	-67.82
	155	-1.5	-2.0	-1.8	0.0	-2.5	-25.53
	18	-0.7	0.9	-1.3	1.2	-1.0	-67.35

	NODE	Vxx	Vyy
Max	Cent	0.8	6.1
	152	-1.0	2.8
	153	-1.0	15.1
	155	2.6	15.1
	18	2.6	2.8
Min	Cent	-5.7	-5.8
	152	-5.3	-3.1
	153	-5.3	-13.7
	155	-6.0	-13.7
	18	-6.0	-3.1

LC		NODE	Fxx	Fyy	Fxy	Fmax	Fmin	ANGLE
RC ENV~2	Max	Cent	0.8	0.5	0.8	1.1	-0.0	19.11
		152	0.3	0.6	0.8	0.6	-0.0	-77.26
		153	0.3	0.5	0.8	0.8	-0.0	29.71
		155	1.3	0.5	0.8	1.6	0.0	20.29
		18	1.3	0.6	0.8	1.5	-0.1	13.58
	Min	Cent	-0.2	-1.3	-0.2	0.1	-1.5	34.92
		152	-0.1	-1.9	-0.2	0.1	-2.2	25.07
		153	-0.1	-0.6	-0.2	0.2	-1.1	58.77
		155	-0.3	-0.6	-0.2	0.2	-0.9	47.87
		18	-0.3	-1.9	-0.2	0.1	-2.1	19.26

	NODE	Mxx	Myy	Mxy	Mmax	Mmin	ANGLE
Max	Cent	1.0	5.4	-0.4	5.8	0.8	-75.56
	152	0.1	5.1	-0.5	5.5	-0.1	-76.09
	153	2.3	7.5	-0.7	8.0	1.9	-74.46
	155	1.9	6.6	-0.3	6.9	1.8	-77.88
	18	-0.2	4.2	-0.1	4.3	-0.2	-79.69
Min	Cent	0.3	4.3	-1.3	4.3	0.1	-84.38
	152	-0.4	3.5	-1.4	3.5	-0.7	-82.12
	153	1.8	4.6	-1.7	5.1	1.5	-68.55
	155	-0.2	4.5	-1.2	4.6	-0.3	-82.57

18	-0.5	3.6	-0.9	3.6	-0.7	-85.17

	NODE	Vxx	Vyy
Max	Cent	-1.4	2.4
	152	-2.9	1.7
	153	-2.9	4.0
	155	0.2	4.0
	18	0.2	1.7
Min	Cent	-3.7	-1.2
	152	-3.9	-0.4
	153	-3.9	-3.2
	155	-3.4	-3.2
	18	-3.4	-0.4

ELEM	MAT	SEC	LC	NODE	Fxx	Fyy	Fxy	Fmax	Fmin	ANGLE
123	1	1	SX (RS)	Cent	3.3	1.4	3.1	5.6	-0.9	36.68
				153	2.5	1.7	3.1	5.2	-1.1	41.43
				154	2.5	1.7	3.1	5.2	-1.1	41.54
				8	9.0	1.7	3.1	10.2	0.5	20.26
				155	9.0	1.7	3.1	10.2	0.5	20.21

	NODE	Mxx	Myy	Mxy	Mmax	Mmin	ANGLE
	Cent	7.0	2.2	2.8	8.3	0.9	24.71
	153	1.9	1.4	1.2	2.8	0.4	39.34
	154	9.6	2.1	8.2	14.9	-3.2	32.71
	8	33.1	6.6	7.7	35.1	4.5	15.03
	155	2.8	4.2	1.6	5.2	1.7	56.96

	NODE	Vxx	Vyy
	Cent	17.0	4.3
	153	20.1	8.8
	154	20.1	0.6
	8	54.1	0.6
	155	54.1	8.8

LC	NODE	Fxx	Fyy	Fxy	Fmax	Fmin	ANGLE
SY (RS)	Cent	0.9	4.8	2.4	5.9	-0.3	64.77
	153	1.1	2.1	2.4	4.0	-0.9	51.21
	154	1.1	11.2	2.4	11.8	0.5	77.37
	8	2.7	11.2	2.4	11.9	2.0	75.37
	155	2.7	2.1	2.4	4.8	-0.0	41.74

	NODE	Mxx	Myy	Mxy	Mmax	Mmin	ANGLE
	Cent	2.4	5.1	1.5	5.8	1.7	65.78
	153	0.9	1.4	1.0	2.2	0.1	52.18
	154	3.3	2.9	1.8	4.8	1.3	41.90
	8	9.1	22.0	4.7	23.5	7.6	71.97
	155	1.3	6.7	4.9	9.6	-1.6	59.44

	NODE	Vxx	Vyy
	Cent	4.9	10.9
	153	6.9	14.4
	154	6.9	35.9
	8	13.1	35.9
	155	13.1	14.4

LC		NODE	Fxx	Fyy	Fxy	Fmax	Fmin	ANGLE
RC ENV~1	Max	Cent	5.6	5.7	6.1	10.2	-0.2	37.08
		153	1.3	2.3	6.1	6.2	-0.0	46.87
		154	1.3	12.8	6.1	13.8	0.0	74.59
		8	16.1	12.8	6.1	18.7	4.5	23.01
		155	16.1	2.3	6.1	18.1	0.2	18.48
	Min	Cent	-2.1	-3.9	-1.7	0.5	-4.1	-57.36
		153	-4.9	-1.9	-1.7	-1.1	-9.0	-50.00
		154	-4.9	-9.7	-1.7	-2.1	-9.8	-7.13
		8	-5.4	-9.7	-1.7	0.3	-9.8	-73.79
		155	-5.4	-1.9	-1.7	-0.9	-6.1	-69.83

	NODE	Mxx	Myy	Mxy	Mmax	Mmin	ANGLE
Max	Cent	10.3	11.0	0.3	14.8	8.1	-60.23
	153	4.3	10.4	0.2	11.4	4.3	-70.71
	154	24.7	5.9	3.8	32.6	5.2	-28.13
	8	34.1	33.1	3.7	34.9	16.9	12.18
	155	1.4	11.0	4.3	12.5	1.2	71.05
Min	Cent	-3.7	0.9	-7.9	4.9	-6.5	-44.79
	153	0.6	4.0	-3.4	5.1	-0.5	-60.57
	154	1.5	0.2	-14.7	8.3	-11.4	-11.76
	8	-32.0	-10.9	-13.5	-0.7	-35.4	-40.37
	155	-5.7	-2.5	-5.5	1.0	-8.1	-67.06

	NODE	Vxx	Vyy
Max	Cent	7.8	1.6
	153	3.6	15.1
	154	3.6	16.6
	8	52.2	16.6
	155	52.2	15.1
Min	Cent	-26.2	-20.3
	153	-40.6	-13.7
	154	-40.6	-55.2
	8	-56.0	-55.2
	155	-56.0	-13.7

LC		NODE	Fxx	Fyy	Fxy	Fmax	Fmin	ANGLE
RC ENV~2	Max	Cent	3.9	1.6	4.2	7.1	-0.2	37.28
		153	0.5	0.3	4.2	2.9	-0.1	55.94
		154	0.5	3.1	4.2	5.2	-0.0	63.79
		8	11.2	3.1	4.2	13.0	1.4	23.17
		155	11.2	0.3	4.2	12.6	-0.2	18.55
	Min	Cent	-1.0	0.4	-0.7	0.6	-1.7	-82.59
		153	-3.4	-0.0	-0.7	0.3	-6.3	69.91
		154	-3.4	0.6	-0.7	1.0	-5.5	-81.26
		8	-2.6	0.6	-0.7	0.7	-2.7	-77.65
		155	-2.6	-0.0	-0.7	0.3	-2.7	-83.57

	NODE	Mxx	Myy	Mxy	Mmax	Mmin	ANGLE
Max	Cent	6.0	7.6	-1.8	10.8	4.5	-60.26
	153	3.2	7.6	-1.0	8.3	2.1	-71.20
	154	17.9	3.9	-1.3	23.4	1.8	-27.83
	8	14.4	15.2	-1.2	17.5	12.2	-72.29
	155	-0.1	6.0	-0.5	6.5	-0.5	-76.35
Min	Cent	0.7	5.9	-5.5	7.4	-2.2	-57.96
	153	2.3	4.8	-2.3	5.6	1.9	-70.74
	154	6.8	2.2	-10.4	7.2	-1.7	-14.86
	8	-13.6	11.0	-9.5	12.4	-16.5	-69.82
	155	-4.0	3.9	-1.9	3.9	-4.1	-84.75

	NODE	Vxx	Vyy
Max	Cent	-4.1	-9.3
	153	-7.7	4.0
	154	-7.7	-17.5
	8	21.1	-17.5
	155	21.1	4.0
Min	Cent	-15.7	-14.4
	153	-29.2	-3.2
	154	-29.2	-32.1
	8	-23.6	-32.1
	155	-23.6	-3.2

ELEM	MAT	SEC	LC		NODE	Fxx	Fyy	Fxy	Fmax	Fmin	ANGLE
124	1	1	SX (RS)		Cent	3.3	1.6	3.2	5.8	-0.9	37.55
					155	9.0	1.7	3.2	10.3	0.5	20.68
					8	9.0	1.9	3.2	10.3	0.6	21.11
					158	2.5	1.9	3.2	5.4	-1.1	42.49
					157	2.5	1.7	3.2	5.3	-1.2	41.53

	NODE	Mxx	Myy	Mxy	Mmax	Mmin	ANGLE
	Cent	7.0	2.2	2.5	8.1	1.1	23.11
	155	2.8	4.3	1.8	5.5	1.6	56.56

8	33.1	6.7	7.4	35.1	4.7	14.68
158	9.7	2.1	7.9	14.7	-2.9	32.25
157	1.8	1.1	1.3	2.8	0.2	38.12

NODE	Vxx	Vyy
Cent	17.0	4.6
155	54.1	9.0
8	54.1	0.6
158	20.2	0.6
157	20.2	9.0

LC		NODE	Fxx	Fyy	Fxy	Fmax	Fmin	ANGLE
SY (RS)		Cent	0.9	5.1	2.7	6.4	-0.5	63.96
		155	2.7	1.7	2.7	5.0	-0.5	39.95
		8	2.7	11.4	2.7	12.2	1.9	74.09
		158	1.1	11.4	2.7	12.1	0.4	76.16
		157	1.1	1.7	2.7	4.1	-1.3	48.34

NODE	Mxx	Myy	Mxy	Mmax	Mmin	ANGLE
Cent	2.7	7.9	1.8	8.5	2.1	72.41
155	1.2	4.0	4.8	7.6	-2.3	53.01
8	9.8	25.4	5.0	26.9	8.3	73.65
158	3.6	5.3	2.5	7.1	1.7	54.09
157	0.8	4.0	0.8	4.2	0.6	76.24

NODE	Vxx	Vyy
Cent	5.5	11.9
155	13.1	14.0
8	13.1	37.6
158	7.1	37.6
157	7.1	14.0

LC		NODE	Fxx	Fyy	Fxy	Fmax	Fmin	ANGLE
RC ENV~1	Max	Cent	5.6	5.5	2.1	9.3	1.5	-34.23
		155	15.9	2.0	2.1	17.7	1.6	-17.52
		8	15.9	12.0	2.1	17.9	5.8	-19.56
		158	1.3	12.0	2.1	12.2	-0.2	82.91
		157	1.3	2.0	2.1	3.7	-0.3	-56.89
	Min	Cent	-2.1	-4.7	-5.5	0.3	-6.8	58.67
		155	-5.5	-1.5	-5.5	0.6	-8.4	73.20
		8	-5.5	-10.8	-5.5	-0.1	-12.0	68.78
		158	-4.8	-10.8	-5.5	-0.7	-12.3	-21.08
		157	-4.8	-1.5	-5.5	0.5	-8.4	-75.68

NODE	Mxx	Myy	Mxy	Mmax	Mmin	ANGLE
Max Cent	10.4	14.1	5.4	15.8	8.3	67.24
155	1.3	8.2	4.9	10.2	0.8	64.86
8	34.4	37.8	11.0	40.3	19.0	73.64
158	25.1	8.4	12.6	31.3	4.1	26.06
157	4.4	11.2	2.1	11.3	4.3	85.62
Min Cent	-3.6	-1.7	-0.3	0.8	-3.6	9.94
155	-5.9	-0.3	-4.6	0.3	-6.2	-70.05
8	-31.8	-13.1	-3.9	-8.0	-32.2	-16.31
158	1.6	-2.1	-3.6	5.0	-2.4	-42.81
157	0.7	1.4	-0.4	1.7	0.6	8.98

NODE	Vxx	Vyy
Max Cent	7.6	22.0
155	52.2	12.6
8	52.2	59.1
158	3.4	59.1
157	3.4	12.6
Min Cent	-26.3	-1.9
155	-56.0	-15.4
8	-56.0	-16.2
158	-41.2	-16.2
157	-41.2	-15.4

LC	NODE	Fxx	Fyy	Fxy	Fmax	Fmin	ANGLE

RC ENV~2	Max	Cent	3.9	0.9	1.0	6.5	-0.1	-34.33
		155	11.1	0.4	1.0	12.3	0.2	-17.55
		8	11.1	1.6	1.0	12.4	0.2	-19.58
		158	0.6	1.6	1.0	3.7	-0.3	-61.34
		157	0.6	0.4	1.0	2.6	-0.2	-57.03
	Min	Cent	-1.0	-0.0	-3.9	0.2	-1.8	63.13
		155	-2.6	0.1	-3.9	0.4	-3.0	74.47
		8	-2.6	-0.5	-3.9	-0.1	-3.0	68.60
		158	-3.3	-0.5	-3.9	0.0	-5.4	39.53
		157	-3.3	0.1	-3.9	0.4	-5.8	72.02

	NODE	Mxx	Myy	Mxy	Mmax	Mmin	ANGLE
Max	Cent	6.1	8.1	4.0	10.0	5.8	65.52
	155	-0.2	5.4	0.2	5.4	-0.2	89.31
	8	14.7	17.2	7.7	18.4	14.3	75.74
	158	18.2	4.2	9.0	22.6	2.2	25.95
	157	3.2	8.2	0.9	8.2	3.1	84.44
Min	Cent	0.9	6.2	0.6	7.1	-0.9	58.19
	155	-4.1	3.4	-0.9	3.4	-4.2	-84.15
	8	-13.2	12.2	-0.2	13.3	-15.2	73.27
	158	7.0	2.2	0.3	7.0	-0.3	3.98
	157	2.4	5.0	0.3	5.2	2.2	70.62

	NODE	Vxx	Vyy
Max	Cent	-4.3	14.8
	155	21.1	1.9
	8	21.1	35.1
	158	-8.1	35.1
	157	-8.1	1.9
Min	Cent	-15.8	10.0
	155	-23.6	-5.9
	8	-23.6	20.4
	158	-29.7	20.4
	157	-29.7	-5.9

ELEM	MAT	SEC	LC		NODE	Fxx	Fyy	Fxy	Fmax	Fmin	ANGLE
125	1	1	SX	(RS)	Cent	0.1	2.0	1.1	2.5	-0.4	64.77
					156	0.7	2.1	1.1	2.7	0.1	61.06
					157	0.7	2.1	1.1	2.8	0.1	61.26
					160	0.7	2.1	1.1	2.7	0.1	61.45
					159	0.7	2.1	1.1	2.7	0.0	61.24

	NODE	Mxx	Myy	Mxy	Mmax	Mmin	ANGLE
	Cent	0.3	1.0	0.4	1.2	0.1	64.40
	156	0.2	1.0	0.4	1.2	0.1	67.00
	157	1.6	2.1	0.6	2.5	1.2	54.87
	160	0.7	1.9	0.5	2.1	0.5	69.42
	159	0.1	1.8	0.3	1.8	0.1	79.70

	NODE	Vxx	Vyy
	Cent	0.6	4.6
	156	2.1	3.6
	157	2.1	5.8
	160	1.2	5.8
	159	1.2	3.6

LC		NODE	Fxx	Fyy	Fxy	Fmax	Fmin	ANGLE
SY	(RS)	Cent	0.1	1.0	0.7	1.4	-0.3	60.44
		156	0.7	1.6	0.7	2.0	0.3	60.22
		157	0.7	2.0	0.7	2.3	0.4	65.08
		160	0.5	2.0	0.7	2.3	0.2	67.25
		159	0.5	1.6	0.7	2.0	0.2	63.00

	NODE	Mxx	Myy	Mxy	Mmax	Mmin	ANGLE
	Cent	0.5	3.0	0.7	3.2	0.3	75.40
	156	0.3	3.1	0.6	3.2	0.2	77.56
	157	1.5	4.3	0.7	4.4	1.3	76.72
	160	0.4	2.4	0.7	2.7	0.2	71.73
	159	0.1	2.6	0.7	2.8	-0.1	74.82

	NODE	Vxx	Vyy
	Cent	1.6	2.7
	156	2.5	3.4
	157	2.5	3.2
	160	0.6	3.2
	159	0.6	3.4

LC		NODE	Fxx	Fyy	Fxy	Fmax	Fmin	ANGLE
RC ENV~1	Max	Cent	0.1	2.4	0.7	2.7	0.0	-54.74
		156	1.0	2.2	0.7	2.5	0.8	-36.98
		157	1.0	2.9	0.7	4.0	0.9	-56.18
		160	0.4	2.9	0.7	3.5	0.2	-67.43
		159	0.4	2.2	0.7	2.4	0.2	71.38
	Min	Cent	-0.2	-1.6	-2.0	0.2	-2.6	61.05
		156	-0.5	-2.0	-2.0	0.1	-3.0	-53.56
		157	-0.5	-1.4	-2.0	0.1	-2.6	51.89
		160	-1.3	-1.4	-2.0	0.2	-2.8	-40.53
		159	-1.3	-2.0	-2.0	0.0	-3.1	-37.09

	NODE	Mxx	Myy	Mxy	Mmax	Mmin	ANGLE
Max	Cent	1.4	5.9	1.4	6.2	1.4	74.42
	156	0.1	6.7	1.2	6.7	-0.0	89.20
	157	3.3	7.8	1.6	8.3	3.1	73.16
	160	3.7	4.5	1.4	5.2	3.4	62.75
	159	0.4	5.1	1.1	5.4	0.4	77.42
Min	Cent	0.5	-0.2	-0.4	0.5	-0.2	-6.80
	156	-0.6	0.1	-0.4	0.1	-0.6	-82.96
	157	0.0	-0.7	-0.2	0.2	-0.8	10.27
	160	1.3	-0.3	-0.4	1.3	-0.3	8.65
	159	0.1	-0.0	-0.7	0.4	-0.3	-37.25

	NODE	Vxx	Vyy
Max	Cent	-1.8	7.2
	156	-0.8	8.1
	157	-0.8	8.8
	160	-2.2	8.8
	159	-2.2	8.1
Min	Cent	-5.3	-2.4
	156	-5.8	-2.1
	157	-5.8	-2.9
	160	-6.1	-2.9
	159	-6.1	-2.1

LC		NODE	Fxx	Fyy	Fxy	Fmax	Fmin	ANGLE
RC ENV~2	Max	Cent	-0.1	0.9	0.3	1.9	-0.1	-54.97
		156	0.7	0.1	0.3	1.7	-0.1	-37.18
		157	0.7	1.9	0.3	2.8	-0.0	-56.45
		160	0.2	1.9	0.3	2.4	-0.0	-67.58
		159	0.2	0.1	0.3	1.0	-0.0	-53.44
	Min	Cent	-0.1	-0.0	-1.4	0.1	-1.1	78.90
		156	-0.3	-0.1	-1.4	0.1	-1.1	80.08
		157	-0.3	-0.2	-1.4	0.1	-0.6	60.35
		160	-0.9	-0.2	-1.4	0.1	-1.5	77.43
		159	-0.9	-0.1	-1.4	0.1	-1.9	-61.30

	NODE	Mxx	Myy	Mxy	Mmax	Mmin	ANGLE
Max	Cent	1.1	3.7	0.7	3.9	1.1	77.31
	156	-0.0	4.8	0.6	4.8	-0.0	88.02
	157	2.3	4.3	1.1	4.5	2.2	76.09
	160	2.8	3.1	0.8	3.7	2.4	52.05
	159	0.3	3.3	0.4	3.3	0.3	85.81
Min	Cent	0.9	2.7	-0.2	2.7	0.7	89.62
	156	-0.4	3.2	-0.2	3.3	-0.4	81.50
	157	1.3	3.5	0.0	3.9	0.9	68.84
	160	1.7	1.4	-0.1	1.7	1.3	0.69
	159	0.2	1.5	-0.4	1.5	0.1	-84.06

	NODE	Vxx	Vyy
Max	Cent	-3.4	5.0

			156	-3.1	5.4		
			157	-3.1	4.9		
			160	-2.9	4.9		
			159	-2.9	5.4		
		Min	Cent	-3.9	1.9		
			156	-4.1	1.2		
			157	-4.1	1.7		
			160	-4.5	1.7		
			159	-4.5	1.2		

ELEM	MAT	SEC	LC		NODE	Fxx	Fyy	Fxy	Fmax	Fmin	ANGLE
126	1	1	SX	(RS)	Cent	1.4	1.6	1.1	2.6	0.4	48.27
					157	2.4	2.0	1.1	3.4	1.1	39.37
					158	2.4	1.3	1.1	3.1	0.6	31.44
					161	0.4	1.3	1.1	2.1	-0.3	56.07
					160	0.4	2.0	1.1	2.6	-0.1	62.87

	NODE	Mxx	Myy	Mxy	Mmax	Mmin	ANGLE
	Cent	2.4	1.0	1.0	3.0	0.5	28.25
	157	2.3	2.2	1.4	3.6	0.9	43.89
	158	9.7	2.2	0.4	9.7	2.2	3.08
	161	1.1	0.9	0.3	1.4	0.7	34.02
	160	1.1	2.0	1.4	3.0	0.0	53.67

	NODE	Vxx	Vyy
	Cent	10.4	3.1
	157	20.2	5.8
	158	20.2	0.3
	161	0.6	0.3
	160	0.6	5.8

LC		NODE	Fxx	Fyy	Fxy	Fmax	Fmin	ANGLE
SY	(RS)	Cent	0.9	2.6	0.8	2.9	0.6	67.82
		157	1.4	1.8	0.8	2.5	0.8	51.08
		158	1.4	3.5	0.8	3.7	1.2	70.44
		161	0.4	3.5	0.8	3.7	0.2	75.72
		160	0.4	1.8	0.8	2.2	0.1	64.71

	NODE	Mxx	Myy	Mxy	Mmax	Mmin	ANGLE
	Cent	1.2	3.3	1.0	3.6	0.8	68.74
	157	0.9	4.0	1.0	4.3	0.6	73.65
	158	3.6	5.1	0.7	5.4	3.3	68.46
	161	0.9	1.6	0.8	2.1	0.4	56.15
	160	0.9	2.5	1.1	3.0	0.4	63.55

	NODE	Vxx	Vyy
	Cent	3.7	4.6
	157	7.1	3.2
	158	7.1	6.1
	161	0.4	6.1
	160	0.4	3.2

LC		NODE	Fxx	Fyy	Fxy	Fmax	Fmin	ANGLE
RC ENV~1	Max	Cent	0.7	3.1	0.7	3.2	0.4	82.12
		157	1.3	2.6	0.7	2.9	1.0	66.76
		158	1.3	3.8	0.7	3.9	0.8	83.52
		161	0.2	3.8	0.7	3.9	0.1	83.74
		160	0.2	2.6	0.7	3.0	0.1	-63.98
	Min	Cent	-2.8	-2.1	-1.9	-0.6	-3.5	-39.63
		157	-4.7	-1.4	-1.9	-0.6	-5.2	-62.95
		158	-4.7	-3.1	-1.9	-1.6	-5.3	-39.34
		161	-0.9	-3.1	-1.9	-0.2	-3.6	-23.15
		160	-0.9	-1.4	-1.9	0.1	-2.6	62.75

	NODE	Mxx	Myy	Mxy	Mmax	Mmin	ANGLE
Max	Cent	10.7	6.5	1.8	11.0	5.3	14.26
	157	4.4	7.6	2.7	8.5	4.0	67.87
	158	26.2	11.0	1.0	26.2	11.0	-0.49

		161	9.3	3.2	0.8	9.4	3.0	-4.72
		160	4.8	4.7	2.4	6.7	3.2	43.42
	Min	Cent	3.2	-0.0	-0.7	3.2	-0.0	-13.79
		157	-0.2	-0.3	-0.1	1.3	-0.4	9.74
		158	2.0	0.4	-0.9	3.2	0.3	-86.45
		161	4.9	0.1	-1.4	4.9	-0.0	-3.63
		160	1.4	-0.4	-0.6	1.5	-0.4	-18.20

		NODE	Vxx	Vyy
	Max	Cent	-1.4	8.6
		157	3.4	8.8
		158	3.4	11.3
		161	-6.2	11.3
		160	-6.2	8.8
	Min	Cent	-25.2	-0.5
		157	-41.2	-2.9
		158	-41.2	-1.0
		161	-9.2	-1.0
		160	-9.2	-2.9

LC		NODE	Fxx	Fyy	Fxy	Fmax	Fmin	ANGLE
RC ENV~2	Max	Cent	0.3	1.1	0.3	1.6	-0.1	-69.37
		157	0.6	1.5	0.3	1.8	-0.1	-75.61
		158	0.6	0.6	0.3	1.0	0.0	-73.03
		161	-0.0	0.6	0.3	1.5	-0.1	-57.31
		160	-0.0	1.5	0.3	2.1	-0.1	-64.22
	Min	Cent	-1.9	0.0	-1.3	0.2	-2.4	81.96
		157	-3.3	-0.1	-1.3	0.1	-3.6	80.29
		158	-3.3	0.2	-1.3	0.2	-3.7	82.37
		161	-0.6	0.2	-1.3	0.2	-1.4	83.15
		160	-0.6	-0.1	-1.3	0.1	-1.2	59.83

		NODE	Mxx	Myy	Mxy	Mmax	Mmin	ANGLE
	Max	Cent	7.8	4.2	1.1	8.1	3.9	15.06
		157	2.9	4.5	2.0	5.3	2.9	60.22
		158	19.0	8.0	0.4	19.0	8.0	0.00
		161	7.0	1.7	0.1	7.0	1.7	-3.63
		160	3.5	3.3	1.6	4.9	2.3	43.34
	Min	Cent	4.4	2.8	-0.3	4.5	2.8	-6.67
		157	1.7	3.6	0.1	4.2	0.5	84.25
		158	7.4	4.4	-0.5	7.4	4.4	-4.81
		161	5.5	1.2	-0.9	5.5	1.0	-7.40
		160	2.0	1.5	-0.2	2.0	1.3	-16.08

		NODE	Vxx	Vyy
	Max	Cent	-7.2	5.8
		157	-8.1	4.9
		158	-8.1	8.1
		161	-6.4	8.1
		160	-6.4	4.9
	Min	Cent	-18.4	3.9
		157	-29.7	1.7
		158	-29.7	4.9
		161	-7.1	4.9
		160	-7.1	1.7

ELEM	MAT	SEC	LC		NODE	Fxx	Fyy	Fxy	Fmax	Fmin	ANGLE
127	1	1	SX (RS)		Cent	0.2	2.4	0.3	2.5	0.2	81.18
					159	0.5	3.1	0.3	3.1	0.4	82.54
					160	0.5	1.8	0.3	1.9	0.4	76.51
					163	0.1	1.8	0.3	1.9	0.0	79.13
					162	0.1	3.1	0.3	3.1	0.1	83.45

		NODE	Mxx	Myy	Mxy	Mmax	Mmin	ANGLE
		Cent	0.4	1.8	0.4	1.9	0.3	73.09
		159	0.1	1.1	0.4	1.3	-0.0	69.05
		160	0.7	1.7	0.5	1.9	0.5	68.04
		163	0.9	1.8	0.4	2.0	0.7	69.05
		162	0.3	2.5	0.4	2.6	0.2	80.81

		NODE	Vxx	Vyy

Cent	1.3	1.6	
159	1.2	2.9	
160	1.2	0.4	
163	1.4	0.4	
162	1.4	2.9	

LC		NODE	Fxx	Fyy	Fxy	Fmax	Fmin	ANGLE
SY (RS)		Cent	0.3	0.6	0.3	0.8	0.0	58.11
		159	0.5	0.4	0.3	0.8	0.1	41.22
		160	0.5	1.0	0.3	1.1	0.3	62.32
		163	0.0	1.0	0.3	1.1	-0.1	72.32
		162	0.0	0.4	0.3	0.6	-0.2	60.17

	NODE	Mxx	Myy	Mxy	Mmax	Mmin	ANGLE
	Cent	0.2	1.6	0.9	2.0	-0.2	64.51
	159	0.2	2.7	0.8	2.9	-0.0	72.99
	160	0.4	2.3	0.8	2.6	0.1	69.41
	163	0.2	0.8	0.9	1.4	-0.4	54.14
	162	0.2	1.2	0.9	1.7	-0.3	60.00

	NODE	Vxx	Vyy
	Cent	0.5	3.3
	159	0.6	4.6
	160	0.6	3.0
	163	0.3	3.0
	162	0.3	4.6

LC		NODE	Fxx	Fyy	Fxy	Fmax	Fmin	ANGLE
RC ENV~1	Max	Cent	0.1	3.2	0.2	3.2	0.1	85.95
		159	0.3	4.1	0.2	4.1	0.2	86.74
		160	0.3	2.4	0.2	2.4	0.2	84.18
		163	0.1	2.4	0.2	2.4	0.1	84.62
		162	0.1	4.1	0.2	4.1	0.1	-82.01
	Min	Cent	-0.5	-1.7	-0.6	-0.2	-1.8	-18.32
		159	-1.0	-2.1	-0.6	-0.6	-2.2	-17.40
		160	-1.0	-1.3	-0.6	-0.5	-1.6	-29.04
		163	-0.2	-1.3	-0.6	0.0	-1.5	-19.57
		162	-0.2	-2.1	-0.6	-0.1	-2.2	11.26

	NODE	Mxx	Myy	Mxy	Mmax	Mmin	ANGLE
Max	Cent	1.9	3.1	1.2	3.6	1.8	62.84
	159	0.4	4.3	1.2	4.6	0.3	74.67
	160	3.7	4.4	1.2	5.0	3.4	64.23
	163	3.2	2.5	1.2	3.3	1.8	41.53
	162	0.4	3.5	1.1	3.6	0.4	79.06
Min	Cent	0.6	-0.4	-1.0	0.6	-0.5	-5.74
	159	-0.2	-1.1	-0.9	0.0	-1.3	-23.09
	160	1.4	-0.2	-0.9	1.4	-0.3	-4.14
	163	0.9	-1.2	-1.0	0.9	-1.2	-3.52
	162	-0.1	-1.5	-1.1	-0.1	-1.7	-5.17

	NODE	Vxx	Vyy
Max	Cent	-1.9	6.0
	159	-2.2	7.9
	160	-2.2	5.7
	163	-1.6	5.7
	162	-1.6	7.9
Min	Cent	-5.7	-1.4
	159	-6.1	-3.3
	160	-6.1	-0.2
	163	-5.3	-0.2
	162	-5.3	-3.3

LC		NODE	Fxx	Fyy	Fxy	Fmax	Fmin	ANGLE
RC ENV~2	Max	Cent	0.0	2.0	0.1	2.1	-0.0	-80.45
		159	0.1	2.8	0.1	2.9	-0.0	-83.43
		160	0.1	1.2	0.1	1.2	-0.0	-78.07
		163	-0.0	1.2	0.1	1.3	-0.0	-73.07

	162	-0.0	2.8	0.1	2.9	-0.1	-82.06
Min	Cent	-0.4	-0.3	-0.4	-0.0	-0.4	29.58
	159	-0.7	-0.6	-0.4	0.0	-0.7	10.80
	160	-0.7	-0.0	-0.4	0.1	-0.8	61.90
	163	-0.1	-0.0	-0.4	0.1	-0.2	45.60
	162	-0.1	-0.6	-0.4	-0.1	-0.6	14.11

	NODE	Mxx	Myy	Mxy	Mmax	Mmin	ANGLE
Max	Cent	1.4	2.0	0.4	2.1	1.3	72.94
	159	0.3	2.8	0.4	2.8	0.2	-86.55
	160	2.7	2.9	0.5	3.2	2.5	54.41
	163	2.4	1.1	0.4	2.4	1.1	6.07
	162	0.3	1.5	0.3	1.5	0.3	87.30
Min	Cent	0.8	0.7	-0.6	1.1	0.3	-39.35
	159	0.1	1.5	-0.5	1.6	-0.0	78.52
	160	1.7	1.4	-0.5	1.9	1.2	-29.80
	163	1.4	-0.0	-0.6	1.5	-0.1	-14.23
	162	-0.0	-0.5	-0.7	0.2	-1.0	-30.63

	NODE	Vxx	Vyy
Max	Cent	-2.6	4.1
	159	-2.9	5.2
	160	-2.9	3.8
	163	-2.3	3.8
	162	-2.3	5.2
Min	Cent	-4.2	1.9
	159	-4.5	1.0
	160	-4.5	2.5
	163	-3.9	2.5
	162	-3.9	1.0

ELEM	MAT	SEC	LC		NODE	Fxx	Fyy	Fxy	Fmax	Fmin	ANGLE
128	1	1	SX	(RS)	Cent	0.4	1.6	0.6	1.9	0.1	66.88
					160	0.4	1.9	0.6	2.1	0.2	69.67
					161	0.4	1.3	0.6	1.7	0.1	62.93
					164	0.4	1.3	0.6	1.6	0.1	63.69
					163	0.4	1.9	0.6	2.1	0.2	70.16

	NODE	Mxx	Myy	Mxy	Mmax	Mmin	ANGLE
	Cent	1.5	1.4	0.8	2.2	0.7	43.68
	160	1.0	1.7	0.8	2.2	0.5	57.38
	161	1.2	0.9	1.1	2.2	-0.1	41.89
	164	2.5	1.2	0.8	2.9	0.9	24.57
	163	1.3	1.9	0.4	2.1	1.1	62.55

	NODE	Vxx	Vyy
	Cent	1.5	0.3
	160	0.6	0.4
	161	0.6	0.3
	164	2.5	0.3
	163	2.5	0.4

LC		NODE	Fxx	Fyy	Fxy	Fmax	Fmin	ANGLE
SY	(RS)	Cent	0.4	1.1	0.8	1.6	-0.1	56.57
		160	0.7	0.9	0.8	1.6	0.0	48.55
		161	0.7	1.3	0.8	1.9	0.2	55.16
		164	0.2	1.3	0.8	1.7	-0.2	62.95
		163	0.2	0.9	0.8	1.4	-0.3	57.78

	NODE	Mxx	Myy	Mxy	Mmax	Mmin	ANGLE
	Cent	0.6	1.4	1.0	2.1	-0.0	56.74
	160	0.9	2.4	1.0	2.9	0.4	63.90
	161	1.0	2.1	1.0	2.7	0.4	59.18
	164	0.3	0.5	1.0	1.4	-0.6	47.95
	163	0.2	0.8	0.9	1.5	-0.5	53.04

	NODE	Vxx	Vyy
	Cent	0.3	2.9
	160	0.4	3.0

		161	0.4	2.9
		164	0.3	2.9
		163	0.3	3.0

LC		NODE	Fxx	Fyy	Fxy	Fmax	Fmin	ANGLE
RC ENV~1	Max	Cent	0.2	2.1	0.6	2.1	0.1	79.16
		160	0.5	2.4	0.6	2.4	0.2	80.50
		161	0.5	1.8	0.6	2.0	0.2	69.62
		164	0.1	1.8	0.6	1.9	0.0	74.38
		163	0.1	2.4	0.6	2.4	0.1	80.63
	Min	Cent	-0.9	-1.1	-1.1	-0.0	-1.8	-37.65
		160	-1.0	-1.4	-1.1	-0.1	-2.0	-34.36
		161	-1.0	-0.9	-1.1	0.1	-2.0	-41.98
		164	-0.8	-0.9	-1.1	0.1	-1.7	-40.88
		163	-0.8	-1.4	-1.1	-0.1	-1.9	-33.40

		NODE	Mxx	Myy	Mxy	Mmax	Mmin	ANGLE
	Max	Cent	7.1	3.0	1.3	7.1	2.6	3.42
		160	4.7	4.6	1.4	5.5	3.8	56.94
		161	9.6	4.5	1.6	9.7	3.9	6.51
		164	10.0	2.2	1.2	10.0	2.1	0.15
		163	4.0	2.6	1.2	4.0	2.2	-3.17
	Min	Cent	2.7	0.1	-1.3	2.7	0.0	-8.68
		160	1.4	-0.2	-1.1	1.5	-0.3	-16.62
		161	5.0	0.2	-1.3	5.2	0.2	-10.14
		164	3.5	-0.2	-1.5	3.5	-0.3	-7.65
		163	0.7	-1.2	-1.3	0.7	-1.2	-4.67

		NODE	Vxx	Vyy
	Max	Cent	-5.4	5.5
		160	-6.2	5.7
		161	-6.2	5.5
		164	-4.7	5.5
		163	-4.7	5.7
	Min	Cent	-10.2	-0.2
		160	-9.2	-0.2
		161	-9.2	-0.3
		164	-11.1	-0.3
		163	-11.1	-0.2

LC		NODE	Fxx	Fyy	Fxy	Fmax	Fmin	ANGLE
RC ENV~2	Max	Cent	-0.1	0.9	0.2	1.2	-0.1	-67.51
		160	-0.0	1.1	0.2	1.4	-0.1	-69.70
		161	-0.0	0.7	0.2	1.0	-0.1	-65.82
		164	-0.1	0.7	0.2	1.1	-0.1	-64.93
		163	-0.1	1.1	0.2	1.4	-0.1	-69.02
	Min	Cent	-0.6	0.1	-0.7	0.2	-0.9	77.71
		160	-0.6	-0.1	-0.7	0.1	-0.9	70.90
		161	-0.6	0.2	-0.7	0.3	-1.0	87.57
		164	-0.6	0.2	-0.7	0.3	-0.9	87.71
		163	-0.6	-0.1	-0.7	0.1	-0.8	72.95

		NODE	Mxx	Myy	Mxy	Mmax	Mmin	ANGLE
	Max	Cent	5.3	1.9	0.5	5.3	1.9	4.77
		160	3.4	3.1	0.6	3.8	2.8	35.28
		161	7.2	2.7	0.6	7.3	2.6	7.19
		164	7.5	1.0	0.4	7.5	1.0	0.91
		163	2.9	1.2	0.3	2.9	1.2	-0.06
	Min	Cent	3.5	1.0	-0.8	3.6	0.9	-11.45
		160	2.0	1.4	-0.6	2.2	1.2	-29.04
		161	5.6	2.1	-0.8	5.7	2.0	-8.93
		164	4.8	0.2	-0.9	4.9	0.1	-8.19
		163	1.4	0.0	-0.8	1.6	-0.1	-17.05

		NODE	Vxx	Vyy
	Max	Cent	-6.2	3.9
		160	-6.4	3.8
		161	-6.4	3.9
		164	-6.0	3.9
		163	-6.0	3.8
	Min	Cent	-7.7	2.6

					160	-7.1	2.5				
					161	-7.1	2.5				
					164	-8.3	2.5				
					163	-8.3	2.5				

ELEM	MAT	SEC	LC		NODE	Fxx	Fyy	Fxy	Fmax	Fmin	ANGLE
129	1	1	SX	(RS)	Cent	0.1	2.6	0.0	2.6	0.1	89.94
					162	0.1	3.4	0.0	3.4	0.1	89.95
					163	0.1	1.9	0.0	1.9	0.1	89.91
					166	0.1	1.9	0.0	1.9	0.1	89.91
					165	0.1	3.4	0.0	3.4	0.1	89.95

		NODE	Mxx	Myy	Mxy	Mmax	Mmin	ANGLE
		Cent	0.5	1.9	0.0	1.9	0.5	89.77
		162	0.2	2.1	0.1	2.1	0.2	86.91
		163	0.9	1.8	0.1	1.8	0.8	83.40
		166	0.9	1.8	0.1	1.8	0.8	83.88
		165	0.2	2.1	0.1	2.1	0.2	87.15

		NODE	Vxx	Vyy
		Cent	1.4	0.0
		162	1.4	0.0
		163	1.4	0.0
		166	1.4	0.0
		165	1.4	0.0

LC		NODE	Fxx	Fyy	Fxy	Fmax	Fmin	ANGLE
SY	(RS)	Cent	0.0	0.0	0.2	0.3	-0.2	46.74
		162	0.1	0.0	0.2	0.3	-0.2	40.63
		163	0.1	0.0	0.2	0.3	-0.2	40.89
		166	0.1	0.0	0.2	0.3	-0.2	40.92
		165	0.1	0.0	0.2	0.3	-0.2	40.66

		NODE	Mxx	Myy	Mxy	Mmax	Mmin	ANGLE
		Cent	0.0	0.0	0.9	0.9	-0.9	45.00
		162	0.2	1.2	0.9	1.7	-0.3	60.75
		163	0.2	0.8	0.9	1.4	-0.4	54.20
		166	0.2	0.8	0.9	1.4	-0.4	54.20
		165	0.2	1.2	0.9	1.7	-0.3	60.75

		NODE	Vxx	Vyy
		Cent	0.0	3.3
		162	0.3	4.6
		163	0.3	2.8
		166	0.3	2.8
		165	0.3	4.6

LC		NODE	Fxx	Fyy	Fxy	Fmax	Fmin	ANGLE
RC ENV~1	Max	Cent	0.1	3.5	0.2	3.5	0.1	89.88
		162	0.1	4.7	0.2	4.7	0.1	89.88
		163	0.1	2.5	0.2	2.5	0.1	89.83
		166	0.1	2.5	0.2	2.5	0.1	89.83
		165	0.1	4.7	0.2	4.7	0.1	89.88
	Min	Cent	-0.2	-1.7	-0.2	-0.2	-1.7	0.07
		162	-0.2	-2.3	-0.2	-0.2	-2.3	0.05
		163	-0.2	-1.3	-0.2	-0.2	-1.3	0.10
		166	-0.2	-1.3	-0.2	-0.2	-1.3	0.10
		165	-0.2	-2.3	-0.2	-0.2	-2.3	0.05

		NODE	Mxx	Myy	Mxy	Mmax	Mmin	ANGLE
	Max	Cent	1.7	2.4	0.9	2.6	1.4	-34.90
		162	0.6	2.8	0.9	3.1	0.3	-64.72
		163	3.1	2.4	0.9	3.4	2.3	-22.51
		166	3.1	2.0	0.8	3.5	2.0	-24.23
		165	0.3	2.3	0.8	2.3	0.3	-89.98
	Min	Cent	0.4	-1.5	-1.4	0.4	-1.5	-0.68
		162	-0.1	-1.4	-1.3	-0.1	-1.4	-2.98
		163	0.9	-1.1	-1.3	0.9	-1.1	-1.11

166	0.9	-1.5	-1.5	0.9	-1.6	-3.87
165	-0.2	-2.4	-1.5	-0.1	-3.1	-5.86

	NODE	Vxx	Vyy
Max	Cent	-1.6	4.2
	162	-1.6	6.8
	163	-1.6	3.6
	166	-1.5	3.6
	165	-1.5	6.8
Min	Cent	-5.2	-2.4
	162	-5.3	-3.6
	163	-5.3	-1.9
	166	-5.1	-1.9
	165	-5.1	-3.6

LC		NODE	Fxx	Fyy	Fxy	Fmax	Fmin	ANGLE
RC ENV~2	Max	Cent	0.0	2.3	0.0	2.3	0.0	89.82
		162	0.0	3.3	0.0	3.3	0.0	89.88
		163	0.0	1.3	0.0	1.3	0.0	89.69
		166	0.0	1.3	0.0	1.3	0.0	89.69
		165	0.0	3.3	0.0	3.3	0.0	89.88
	Min	Cent	-0.1	-0.4	0.0	-0.1	-0.4	6.36
		162	-0.1	-0.7	0.0	-0.1	-0.7	1.53
		163	-0.1	-0.1	0.0	-0.1	-0.1	25.77
		166	-0.1	-0.1	0.0	-0.1	-0.1	25.98
		165	-0.1	-0.7	0.0	-0.1	-0.7	1.53

	NODE	Mxx	Myy	Mxy	Mmax	Mmin	ANGLE
Max	Cent	1.3	0.8	-0.0	1.8	0.6	-33.79
	162	0.4	1.8	0.1	2.1	0.3	-66.26
	163	2.3	0.9	0.1	2.4	0.8	-20.34
	166	2.3	0.5	-0.1	2.5	0.3	-22.27
	165	0.1	0.3	-0.1	0.8	0.1	-46.28
Min	Cent	0.7	-0.4	-0.9	0.9	-0.8	-1.73
	162	0.1	0.3	-0.8	0.6	-0.3	87.02
	163	1.3	-0.2	-0.8	1.5	-0.4	-16.16
	166	1.3	-0.5	-1.0	1.4	-0.8	-14.59
	165	-0.1	-1.5	-1.0	0.1	-2.0	-20.91

	NODE	Vxx	Vyy
Max	Cent	-2.3	2.6
	162	-2.3	4.5
	163	-2.3	0.8
	166	-2.2	0.8
	165	-2.2	4.5
Min	Cent	-3.8	0.9
	162	-3.9	1.0
	163	-3.9	0.6
	166	-3.8	0.6
	165	-3.8	1.0

ELEM	MAT	SEC	LC		NODE	Fxx	Fyy	Fxy	Fmax	Fmin	ANGLE
130	1	1	SX (RS)		Cent	0.4	1.6	0.0	1.6	0.4	89.60
					163	0.4	1.9	0.0	1.9	0.4	89.69
					164	0.4	1.3	0.0	1.3	0.4	89.48
					167	0.4	1.3	0.0	1.3	0.4	89.48
					166	0.4	1.9	0.0	1.9	0.4	89.69

	NODE	Mxx	Myy	Mxy	Mmax	Mmin	ANGLE
	Cent	1.9	1.5	0.0	1.9	1.5	0.94
	163	1.3	1.8	0.2	1.9	1.3	73.57
	164	2.5	1.2	0.2	2.6	1.2	7.48
	167	2.5	1.2	0.2	2.6	1.2	7.14
	166	1.3	1.8	0.2	1.9	1.3	74.26

	NODE	Vxx	Vyy
	Cent	2.5	0.0
	163	2.5	0.0
	164	2.5	0.0
	167	2.5	0.0

		166	2.5	0.0			

LC		NODE	Fxx	Fyy	Fxy	Fmax	Fmin	ANGLE
SY (RS)		Cent	0.0	0.0	0.8	0.8	-0.8	45.62
		163	0.3	0.0	0.8	1.0	-0.6	39.61
		164	0.3	0.0	0.8	1.0	-0.6	39.72
		167	0.3	0.0	0.8	1.0	-0.6	39.75
		166	0.3	0.0	0.8	1.0	-0.6	39.65

		NODE	Mxx	Myy	Mxy	Mmax	Mmin	ANGLE
		Cent	0.0	0.0	0.9	0.9	-0.9	45.00
		163	0.2	0.8	1.0	1.5	-0.5	52.90
		164	0.3	0.8	0.9	1.5	-0.4	51.73
		167	0.3	0.8	0.9	1.5	-0.4	51.73
		166	0.2	0.8	1.0	1.5	-0.5	52.90

		NODE	Vxx	Vyy
		Cent	0.0	2.7
		163	0.3	2.8
		164	0.3	2.7
		167	0.3	2.7
		166	0.3	2.8

LC		NODE	Fxx	Fyy	Fxy	Fmax	Fmin	ANGLE
RC ENV~1	Max	Cent	0.1	2.1	0.8	2.1	0.1	89.61
		163	0.1	2.5	0.8	2.5	0.1	89.67
		164	0.1	1.7	0.8	1.7	0.1	89.53
		167	0.1	1.7	0.8	1.7	0.1	89.53
		166	0.1	2.5	0.8	2.5	0.1	89.67
	Min	Cent	-0.8	-1.1	-0.8	-0.7	-1.1	-0.43
		163	-0.8	-1.4	-0.8	-0.6	-1.4	-0.27
		164	-0.8	-0.9	-0.8	-0.6	-1.0	-0.76
		167	-0.8	-0.9	-0.8	-0.7	-1.0	-0.81
		166	-0.8	-1.4	-0.8	-0.7	-1.4	-0.28

		NODE	Mxx	Myy	Mxy	Mmax	Mmin	ANGLE
	Max	Cent	6.9	2.2	1.0	7.0	2.2	-8.69
		163	3.9	2.5	1.0	4.1	2.5	-21.33
		164	10.1	2.4	1.0	10.1	2.4	-4.58
		167	9.8	1.9	0.9	9.9	1.9	-7.25
		166	3.8	2.1	0.9	4.2	2.1	-23.86
	Min	Cent	2.1	-0.8	-1.6	2.1	-0.8	0.20
		163	0.7	-1.2	-1.5	0.7	-1.2	-2.90
		164	3.5	-0.1	-1.6	3.5	-0.1	-1.43
		167	3.4	-0.5	-1.8	3.4	-0.9	-3.12
		166	0.7	-1.6	-1.8	0.7	-1.6	-5.55

		NODE	Vxx	Vyy
	Max	Cent	-4.6	3.6
		163	-4.7	3.6
		164	-4.7	3.6
		167	-4.6	3.6
		166	-4.6	3.6
	Min	Cent	-11.0	-1.9
		163	-11.1	-1.9
		164	-11.1	-1.8
		167	-10.9	-1.8
		166	-10.9	-1.9

LC		NODE	Fxx	Fyy	Fxy	Fmax	Fmin	ANGLE
RC ENV~2	Max	Cent	-0.1	0.9	0.0	0.9	-0.1	89.64
		163	-0.1	1.2	0.0	1.2	-0.1	89.70
		164	-0.1	0.6	0.0	0.6	-0.1	89.56
		167	-0.1	0.6	0.0	0.6	-0.1	89.56
		166	-0.1	1.2	0.0	1.2	-0.1	89.71
	Min	Cent	-0.6	0.1	0.0	0.1	-0.6	86.89
		163	-0.6	-0.1	0.0	-0.1	-0.6	29.60
		164	-0.6	0.3	0.0	0.3	-0.6	88.40
		167	-0.6	0.3	0.0	0.3	-0.6	88.49

166	-0.6	-0.1	0.0	-0.1	-0.6	55.56

	NODE	Mxx	Myy	Mxy	Mmax	Mmin	ANGLE
Max	Cent	5.1	0.9	0.0	5.2	0.8	-7.17
	163	2.9	1.0	0.1	3.0	0.9	-10.78
	164	7.5	1.3	0.1	7.6	1.2	-3.52
	167	7.3	0.7	-0.0	7.4	0.7	-6.14
	166	2.8	0.6	-0.0	3.0	0.4	-16.59
Min	Cent	3.1	-0.0	-1.0	3.2	-0.3	-10.08
	163	1.4	-0.1	-0.9	1.6	-0.5	-18.11
	164	4.9	0.6	-1.0	4.9	0.4	-7.72
	167	4.6	-0.2	-1.2	4.7	-0.4	-6.93
	166	1.3	-0.5	-1.1	1.5	-0.8	-15.48

	NODE	Vxx	Vyy
Max	Cent	-5.9	1.0
	163	-6.0	0.8
	164	-6.0	1.4
	167	-5.8	1.4
	166	-5.8	0.8
Min	Cent	-8.3	0.9
	163	-8.3	0.6
	164	-8.3	0.9
	167	-8.2	0.9
	166	-8.2	0.6

ELEM	MAT	SEC	LC	NODE	Fxx	Fyy	Fxy	Fmax	Fmin	ANGLE
131	1	1	SX (RS)	Cent	0.2	2.4	0.3	2.5	0.2	81.31
				165	0.1	3.1	0.3	3.1	0.1	83.56
				166	0.1	1.8	0.3	1.9	0.1	79.26
				169	0.5	1.8	0.3	1.9	0.4	76.66
				168	0.5	3.1	0.3	3.1	0.4	82.66

NODE	Mxx	Myy	Mxy	Mmax	Mmin	ANGLE
Cent	0.4	1.8	0.4	1.9	0.3	73.35
165	0.3	2.5	0.4	2.6	0.2	80.97
166	0.9	1.8	0.4	2.0	0.7	69.34
169	0.7	1.7	0.5	1.9	0.5	68.30
168	0.1	1.1	0.4	1.3	-0.0	69.48

NODE	Vxx	Vyy
Cent	1.3	1.6
165	1.4	2.9
166	1.4	0.4
169	1.2	0.4
168	1.2	2.9

LC	NODE	Fxx	Fyy	Fxy	Fmax	Fmin	ANGLE
SY (RS)	Cent	0.3	0.5	0.3	0.7	0.0	56.20
	165	0.0	0.4	0.3	0.6	-0.2	59.72
	166	0.0	0.9	0.3	1.0	-0.1	71.37
	169	0.5	0.9	0.3	1.1	0.3	60.42
	168	0.5	0.4	0.3	0.8	0.1	40.64

NODE	Mxx	Myy	Mxy	Mmax	Mmin	ANGLE
Cent	0.2	1.6	0.9	2.0	-0.2	64.51
165	0.2	1.2	0.9	1.7	-0.3	60.00
166	0.2	0.8	0.9	1.4	-0.4	54.14
169	0.4	2.3	0.8	2.6	0.1	69.41
168	0.2	2.7	0.8	2.9	-0.0	72.99

NODE	Vxx	Vyy
Cent	0.5	3.3
165	0.3	4.6
166	0.3	3.0
169	0.6	3.0
168	0.6	4.6

LC		NODE	Fxx	Fyy	Fxy	Fmax	Fmin	ANGLE
RC ENV~1	Max	Cent	0.1	3.2	0.6	3.2	0.0	81.23
		165	0.1	4.0	0.6	4.1	0.0	83.12
		166	0.1	2.4	0.6	2.5	-0.0	78.60
		169	0.2	2.4	0.6	2.5	0.1	77.87
		168	0.2	4.0	0.6	4.1	0.2	82.85
	Min	Cent	-0.5	-1.7	-0.2	-0.4	-1.7	-8.47
		165	-0.2	-2.1	-0.2	-0.1	-2.2	-5.56
		166	-0.2	-1.3	-0.2	-0.1	-1.3	-9.37
		169	-1.0	-1.3	-0.2	-0.7	-1.4	-17.58
		168	-1.0	-2.1	-0.2	-0.7	-2.2	-7.85

		NODE	Mxx	Myy	Mxy	Mmax	Mmin	ANGLE
	Max	Cent	1.7	2.1	0.5	3.2	1.4	-37.16
		165	0.7	3.0	0.6	3.7	0.4	-55.77
		166	3.0	1.9	0.6	3.8	1.9	-25.05
		169	3.4	3.0	0.5	4.6	2.3	-33.37
		168	0.3	2.7	0.4	2.8	0.2	80.46
	Min	Cent	0.5	-1.4	-2.2	0.8	-1.9	-19.60
		165	-0.1	-2.0	-2.0	0.1	-2.2	-17.55
		166	0.8	-1.7	-2.1	1.0	-2.1	-14.35
		169	1.3	-1.6	-2.3	1.5	-2.0	-18.50
		168	-0.2	-2.6	-2.2	0.3	-3.4	-22.65

		NODE	Vxx	Vyy
	Max	Cent	-1.8	3.2
		165	-1.5	7.4
		166	-1.5	2.0
		169	-2.0	2.0
		168	-2.0	7.4
	Min	Cent	-5.3	-3.4
		165	-5.1	-3.7
		166	-5.1	-4.0
		169	-5.5	-4.0
		168	-5.5	-3.7

LC		NODE	Fxx	Fyy	Fxy	Fmax	Fmin	ANGLE
RC ENV~2	Max	Cent	0.0	2.0	0.4	2.0	-0.1	79.83
		165	-0.0	2.7	0.4	2.8	-0.1	81.41
		166	-0.0	1.2	0.4	1.3	-0.1	72.35
		169	0.1	1.2	0.4	1.3	-0.0	77.59
		168	0.1	2.7	0.4	2.8	-0.1	82.96
	Min	Cent	-0.4	-0.3	-0.1	-0.0	-0.5	-17.62
		165	-0.1	-0.6	-0.1	-0.1	-0.6	-5.79
		166	-0.1	-0.0	-0.1	0.0	-0.2	-47.96
		169	-0.7	-0.0	-0.1	0.1	-0.8	-76.98
		168	-0.7	-0.6	-0.1	-0.0	-0.8	65.57

		NODE	Mxx	Myy	Mxy	Mmax	Mmin	ANGLE
	Max	Cent	1.3	0.8	-0.3	2.3	0.3	-36.66
		165	0.5	1.8	-0.3	2.5	0.0	-56.17
		166	2.2	0.3	-0.2	2.7	0.1	-23.54
		169	2.5	1.3	-0.3	3.3	0.7	-31.98
		168	0.1	0.2	-0.4	1.0	-0.3	-42.45
	Min	Cent	0.7	-0.6	-1.5	1.0	-1.2	-22.29
		165	0.1	-0.2	-1.3	0.5	-0.7	-55.45
		166	1.2	-0.9	-1.4	1.4	-1.3	-14.53
		169	1.5	-0.3	-1.5	1.7	-0.7	-17.70
		168	-0.1	-1.6	-1.5	0.3	-2.2	-25.30

		NODE	Vxx	Vyy
	Max	Cent	-2.3	1.6
		165	-2.2	4.8
		166	-2.2	-0.9
		169	-2.4	-0.9
		168	-2.4	4.8
	Min	Cent	-3.9	-0.2
		165	-3.8	0.6
		166	-3.8	-2.2
		169	-4.1	-2.2
		168	-4.1	0.6

ELEM	MAT	SEC	LC		NODE	Fxx	Fyy	Fxy	Fmax	Fmin	ANGLE
132	1	1	SX	(RS)	Cent	0.4	1.6	0.6	1.8	0.2	67.14
					166	0.4	1.9	0.6	2.1	0.2	70.47
					167	0.4	1.3	0.6	1.6	0.1	63.89
					170	0.4	1.3	0.6	1.6	0.1	63.09
					169	0.4	1.9	0.6	2.1	0.2	69.96

		NODE	Mxx	Myy	Mxy	Mmax	Mmin	ANGLE
		Cent	1.5	1.4	0.7	2.2	0.7	43.72
		166	1.3	1.9	0.4	2.1	1.1	62.87
		167	2.5	1.2	0.7	2.9	0.9	24.41
		170	1.2	0.9	1.1	2.2	-0.1	41.94
		169	1.0	1.7	0.8	2.2	0.5	57.54

	NODE	Vxx	Vyy
	Cent	1.5	0.3
	166	2.5	0.4
	167	2.5	0.3
	170	0.6	0.3
	169	0.6	0.4

LC		NODE	Fxx	Fyy	Fxy	Fmax	Fmin	ANGLE
SY	(RS)	Cent	0.4	1.0	0.8	1.6	-0.1	55.53
		166	0.2	0.9	0.8	1.4	-0.4	56.86
		167	0.2	1.2	0.8	1.7	-0.3	62.07
		170	0.7	1.2	0.8	1.8	0.1	54.01
		169	0.7	0.9	0.8	1.6	-0.0	47.48

	NODE	Mxx	Myy	Mxy	Mmax	Mmin	ANGLE
	Cent	0.6	1.4	1.0	2.1	-0.0	56.74
	166	0.2	0.8	0.9	1.5	-0.5	53.04
	167	0.3	0.5	1.0	1.4	-0.6	47.95
	170	1.0	2.1	1.0	2.7	0.4	59.18
	169	0.9	2.4	1.0	2.9	0.4	63.90

	NODE	Vxx	Vyy
	Cent	0.3	2.9
	166	0.3	3.0
	167	0.3	2.9
	170	0.4	2.9
	169	0.4	3.0

LC		NODE	Fxx	Fyy	Fxy	Fmax	Fmin	ANGLE
RC ENV~1	Max	Cent	0.1	2.1	1.1	2.4	-0.2	69.47
		166	0.1	2.4	1.1	2.7	-0.2	71.48
		167	0.1	1.8	1.1	2.2	-0.2	65.54
		170	0.4	1.8	1.1	2.3	-0.2	60.98
		169	0.4	2.4	1.1	2.7	-0.2	71.43
	Min	Cent	-0.9	-1.1	-0.6	-0.5	-1.3	-30.41
		166	-0.8	-1.4	-0.6	-0.5	-1.5	-22.39
		167	-0.8	-0.8	-0.6	-0.4	-1.3	-37.47
		170	-1.0	-0.8	-0.6	-0.4	-1.5	-41.22
		169	-1.0	-1.4	-0.6	-0.6	-1.5	-24.47

		NODE	Mxx	Myy	Mxy	Mmax	Mmin	ANGLE
	Max	Cent	6.6	2.0	0.7	7.2	2.0	-17.86
		166	3.8	2.1	0.7	4.4	2.0	-22.34
		167	9.7	1.8	0.8	10.1	1.7	-10.98
		170	8.7	3.0	0.7	9.4	2.9	-16.45
		169	4.2	3.1	0.6	5.5	2.6	-31.77
	Min	Cent	2.5	-0.9	-2.5	2.8	-1.2	-16.01
		166	0.6	-1.8	-2.2	0.8	-2.1	-13.89
		167	3.4	-0.7	-2.4	3.6	-0.9	-12.69
		170	4.7	-1.2	-2.9	5.1	-1.5	-12.48
		169	1.2	-1.7	-2.7	1.7	-2.2	-23.29

	NODE	Vxx	Vyy

Max	Cent	-5.2	2.1
	166	-4.6	2.0
	167	-4.6	2.2
	170	-5.8	2.2
	169	-5.8	2.0
Min	Cent	-9.7	-3.7
	166	-10.9	-4.0
	167	-10.9	-3.5
	170	-8.5	-3.5
	169	-8.5	-4.0

LC		NODE	Fxx	Fyy	Fxy	Fmax	Fmin	ANGLE
RC ENV~2	Max	Cent	-0.1	0.9	0.8	1.3	-0.2	67.61
		166	-0.1	1.1	0.8	1.4	-0.2	68.76
		167	-0.1	0.8	0.8	1.1	-0.1	65.18
		170	-0.1	0.8	0.8	1.1	-0.1	66.36
		169	-0.1	1.1	0.8	1.4	-0.2	69.69
	Min	Cent	-0.6	0.1	-0.2	0.2	-0.9	-59.84
		166	-0.6	-0.1	-0.2	0.1	-0.9	-77.81
		167	-0.6	0.2	-0.2	0.3	-0.9	-68.59
		170	-0.7	0.2	-0.2	0.3	-1.0	-68.12
		169	-0.7	-0.1	-0.2	0.1	-0.9	-77.83

	NODE	Mxx	Myy	Mxy	Mmax	Mmin	ANGLE
Max	Cent	4.9	0.7	-0.2	5.3	0.6	-16.25
	166	2.8	0.4	-0.2	3.2	0.2	-20.70
	167	7.3	0.6	-0.1	7.5	0.6	-9.73
	170	6.6	1.0	-0.3	7.0	0.9	-14.91
	169	3.1	1.4	-0.3	4.0	0.8	-30.40
Min	Cent	3.1	-0.3	-1.6	3.2	-0.6	-9.02
	166	1.3	-0.9	-1.4	1.4	-1.3	-15.00
	167	4.6	-0.2	-1.5	4.7	-0.4	-5.91
	170	4.9	0.0	-1.9	5.0	-0.2	-5.90
	169	1.6	-0.2	-1.8	1.8	-0.7	-16.67

	NODE	Vxx	Vyy
Max	Cent	-5.8	-0.6
	166	-5.8	-0.9
	167	-5.8	-0.2
	170	-5.9	-0.2
	169	-5.9	-0.9
Min	Cent	-7.4	-1.8
	166	-8.2	-2.2
	167	-8.2	-1.4
	170	-6.5	-1.4
	169	-6.5	-2.2

ELEM	MAT	SEC	LC		NODE	Fxx	Fyy	Fxy	Fmax	Fmin	ANGLE
133	1	1	SX (RS)		Cent	0.1	2.0	1.1	2.5	-0.4	64.87
					168	0.7	2.1	1.1	2.7	0.1	61.40
					169	0.7	2.1	1.1	2.7	0.1	61.50
					172	0.7	2.1	1.1	2.7	0.1	61.32
					171	0.7	2.1	1.1	2.7	0.1	61.22

	NODE	Mxx	Myy	Mxy	Mmax	Mmin	ANGLE
	Cent	0.3	1.0	0.4	1.2	0.1	64.77
	168	0.1	1.8	0.3	1.8	0.1	79.73
	169	0.7	1.9	0.5	2.1	0.5	69.62
	172	1.6	2.1	0.6	2.5	1.2	55.17
	171	0.2	1.0	0.4	1.2	0.1	67.18

	NODE	Vxx	Vyy
	Cent	0.6	4.6
	168	1.2	3.5
	169	1.2	5.8
	172	2.1	5.8
	171	2.1	3.5

LC		NODE	Fxx	Fyy	Fxy	Fmax	Fmin	ANGLE

SY (RS)	Cent	0.1	1.0	0.7	1.4	-0.3	59.84
	168	0.5	1.6	0.7	2.0	0.2	63.20
	169	0.5	1.9	0.7	2.2	0.2	66.65
	172	0.7	1.9	0.7	2.2	0.4	64.39
	171	0.7	1.6	0.7	2.0	0.3	60.44

	NODE	Mxx	Myy	Mxy	Mmax	Mmin	ANGLE
	Cent	0.5	3.0	0.7	3.2	0.3	75.40
	168	0.1	2.6	0.7	2.8	-0.1	74.82
	169	0.4	2.4	0.7	2.7	0.2	71.73
	172	1.5	4.3	0.7	4.4	1.3	76.72
	171	0.3	3.1	0.6	3.2	0.2	77.56

	NODE	Vxx	Vyy
	Cent	1.6	2.7
	168	0.6	3.4
	169	0.6	3.2
	172	2.5	3.2
	171	2.5	3.4

LC		NODE	Fxx	Fyy	Fxy	Fmax	Fmin	ANGLE
RC ENV~1	Max	Cent	0.1	2.3	2.0	3.2	-0.1	62.79
		168	0.3	2.1	2.0	3.0	-0.2	59.24
		169	0.3	2.9	2.0	3.7	-0.1	64.46
		172	1.1	2.9	2.0	4.1	0.3	55.59
		171	1.1	2.1	2.0	3.2	0.0	54.84
	Min	Cent	-0.2	-1.6	-0.6	-0.1	-1.9	-25.39
		168	-1.3	-2.2	-0.6	-0.8	-3.0	-16.25
		169	-1.3	-1.3	-0.6	-0.7	-2.2	-32.01
		172	-0.5	-1.3	-0.6	-0.4	-1.7	-19.55
		171	-0.5	-2.2	-0.6	-0.4	-2.4	-11.69

	NODE	Mxx	Myy	Mxy	Mmax	Mmin	ANGLE
Max	Cent	1.3	3.8	0.1	3.8	1.3	87.72
	168	0.7	3.6	0.3	4.1	0.4	-58.27
	169	3.3	2.9	0.1	4.9	2.4	-34.12
	172	3.0	5.2	-0.1	5.2	2.9	-87.29
	171	0.1	3.8	0.1	3.8	0.1	88.98
Min	Cent	0.4	-2.2	-2.6	0.9	-2.8	-22.84
	168	0.1	-1.6	-2.1	0.5	-2.1	-29.34
	169	1.2	-1.9	-2.7	1.6	-2.4	-20.79
	172	-0.2	-3.3	-3.0	0.5	-3.9	-21.43
	171	-0.8	-2.4	-2.5	0.1	-3.4	-26.29

	NODE	Vxx	Vyy
Max	Cent	-1.5	4.3
	168	-2.0	6.7
	169	-2.0	4.8
	172	-0.4	4.8
	171	-0.4	6.7
Min	Cent	-4.6	-4.9
	168	-5.5	-3.1
	169	-5.5	-6.9
	172	-5.4	-6.9
	171	-5.4	-3.1

LC		NODE	Fxx	Fyy	Fxy	Fmax	Fmin	ANGLE
RC ENV~2	Max	Cent	-0.0	0.8	1.4	1.9	-0.1	53.85
		168	0.1	-0.0	1.4	0.9	-0.1	51.76
		169	0.1	1.9	1.4	2.5	-0.1	67.37
		172	0.8	1.9	1.4	2.9	-0.0	55.83
		171	0.8	-0.0	1.4	1.8	-0.1	35.28
	Min	Cent	-0.1	-0.1	-0.3	0.0	-1.1	-48.21
		168	-0.9	-0.3	-0.3	-0.1	-2.1	29.04
		169	-0.9	-0.2	-0.3	0.1	-1.5	-50.85
		172	-0.2	-0.2	-0.3	0.1	-0.5	-64.14
		171	-0.2	-0.3	-0.3	-0.0	-1.3	-45.51

	NODE	Mxx	Myy	Mxy	Mmax	Mmin	ANGLE
Max	Cent	0.8	1.1	-0.6	2.5	0.2	-48.03

		168	0.5	2.2	-0.4	2.8	0.1	-59.00
		169	2.5	1.1	-0.6	3.5	0.4	-33.19
		172	1.8	1.2	-0.7	2.8	0.5	-41.99
		171	-0.2	0.8	-0.5	1.5	-0.5	-55.15
	Min	Cent	0.8	-0.1	-1.8	1.3	-1.1	-42.11
		168	0.2	0.4	-1.4	1.0	-0.6	-64.79
		169	1.4	-0.7	-1.8	1.7	-1.3	-19.02
		172	0.8	0.3	-2.1	2.0	-1.4	-37.15
		171	-0.6	-0.9	-1.7	0.6	-2.2	-43.66

	NODE	Vxx	Vyy
Max	Cent	-2.8	1.9
	168	-2.4	4.4
	169	-2.4	0.3
	172	-2.3	0.3
	171	-2.3	4.4
Min	Cent	-3.3	-1.0
	168	-4.1	0.2
	169	-4.1	-2.9
	172	-3.2	-2.9
	171	-3.2	0.2

ELEM	MAT	SEC	LC		NODE	Fxx	Fyy	Fxy	Fmax	Fmin	ANGLE
134	1	1	SX (RS)		Cent	1.4	1.6	1.1	2.6	0.4	48.16
					169	0.4	2.0	1.1	2.6	-0.1	63.02
					170	0.4	1.3	1.1	2.0	-0.3	55.93
					173	2.4	1.3	1.1	3.1	0.6	31.06
					172	2.4	2.0	1.1	3.3	1.1	39.27

	NODE	Mxx	Myy	Mxy	Mmax	Mmin	ANGLE
	Cent	2.4	1.0	1.0	3.0	0.5	28.27
	169	1.1	2.0	1.4	3.0	0.0	53.76
	170	1.2	0.9	0.3	1.4	0.7	34.12
	173	9.7	2.2	0.4	9.7	2.2	3.09
	172	2.3	2.2	1.4	3.6	0.9	44.01

	NODE	Vxx	Vyy
	Cent	10.4	3.1
	169	0.6	5.8
	170	0.6	0.3
	173	20.1	0.3
	172	20.1	5.8

LC		NODE	Fxx	Fyy	Fxy	Fmax	Fmin	ANGLE
SY (RS)		Cent	0.9	2.5	0.8	2.9	0.6	67.23
		169	0.4	1.7	0.8	2.1	0.0	64.07
		170	0.4	3.4	0.8	3.6	0.2	75.41
		173	1.4	3.4	0.8	3.7	1.1	69.92
		172	1.4	1.7	0.8	2.4	0.8	50.07

	NODE	Mxx	Myy	Mxy	Mmax	Mmin	ANGLE
	Cent	1.2	3.3	1.0	3.6	0.8	68.74
	169	0.9	2.5	1.1	3.0	0.4	63.55
	170	0.9	1.6	0.8	2.1	0.4	56.15
	173	3.6	5.1	0.7	5.4	3.3	68.45
	172	0.9	4.0	1.0	4.3	0.6	73.65

	NODE	Vxx	Vyy
	Cent	3.7	4.6
	169	0.4	3.2
	170	0.4	6.1
	173	7.1	6.1
	172	7.1	3.2

LC		NODE	Fxx	Fyy	Fxy	Fmax	Fmin	ANGLE
RC ENV~1	Max	Cent	0.6	3.1	2.0	3.6	-0.1	69.60
		169	0.2	2.6	2.0	3.4	-0.2	64.69
		170	0.2	3.9	2.0	4.3	-0.2	72.94

		173	1.2	3.9	2.0	4.3	0.1	72.65
		172	1.2	2.6	2.0	3.6	0.3	57.32
	Min	Cent	-2.9	-2.0	-0.6	-1.4	-3.6	-34.70
		169	-0.9	-1.4	-0.6	-0.5	-1.8	-32.46
		170	-0.9	-2.9	-0.6	-0.7	-2.9	-9.61
		173	-4.8	-2.9	-0.6	-2.4	-5.4	-36.63
		172	-4.8	-1.4	-0.6	-1.2	-5.3	-75.38

		NODE	Mxx	Myy	Mxy	Mmax	Mmin	ANGLE
	Max	Cent	9.6	4.4	0.4	10.6	4.4	-18.91
		169	4.1	3.1	0.5	6.7	3.0	-35.52
		170	8.4	1.8	0.8	8.6	1.7	-6.94
		173	24.3	7.8	0.5	24.4	7.8	-4.42
		172	4.2	5.0	0.2	5.5	3.2	-43.73
	Min	Cent	2.8	-2.1	-3.2	3.6	-2.5	-25.90
		169	1.1	-1.9	-3.9	2.2	-2.9	-17.75
		170	4.5	-1.3	-1.7	4.6	-1.4	-3.16
		173	1.3	-2.4	-2.0	1.6	-2.4	-28.25
		172	-0.4	-2.9	-4.2	1.8	-3.9	-40.88

		NODE	Vxx	Vyy
	Max	Cent	-0.8	2.7
		169	-5.8	4.8
		170	-5.8	3.3
		173	4.3	3.3
		172	4.3	4.8
	Min	Cent	-23.8	-6.4
		169	-8.5	-6.9
		170	-8.5	-8.8
		173	-39.2	-8.8
		172	-39.2	-6.9

LC		NODE	Fxx	Fyy	Fxy	Fmax	Fmin	ANGLE
RC ENV~2	Max	Cent	0.2	1.1	1.4	1.6	-0.1	69.50
		169	-0.1	1.5	1.4	2.2	-0.2	64.04
		170	-0.1	0.8	1.4	1.6	-0.2	58.46
		173	0.5	0.8	1.4	1.2	0.1	73.31
		172	0.5	1.5	1.4	1.9	-0.1	75.43
	Min	Cent	-2.0	0.1	-0.3	0.2	-2.5	-72.43
		169	-0.7	-0.1	-0.3	0.1	-1.3	-68.52
		170	-0.7	0.3	-0.3	0.4	-1.5	88.04
		173	-3.4	0.3	-0.3	0.4	-3.8	88.12
		172	-3.4	-0.1	-0.3	0.1	-3.7	-46.25

		NODE	Mxx	Myy	Mxy	Mmax	Mmin	ANGLE
	Max	Cent	7.1	1.6	-0.6	7.7	1.2	-17.76
		169	3.0	1.2	-0.8	4.8	0.2	-34.82
		170	6.4	0.3	0.1	6.5	0.3	-5.65
		173	17.7	4.6	-0.2	17.7	4.6	-3.90
		172	2.4	1.3	-1.0	4.0	0.5	-43.33
	Min	Cent	3.7	0.2	-2.2	3.8	-0.2	-11.23
		169	1.5	-0.7	-2.6	1.8	-1.4	-17.74
		170	4.9	-0.5	-1.1	4.9	-0.6	-5.05
		173	6.0	1.0	-1.3	6.1	0.9	-7.11
		172	1.2	0.4	-2.9	2.6	-2.0	-32.88

		NODE	Vxx	Vyy
	Max	Cent	-6.2	-1.5
		169	-5.9	0.3
		170	-5.9	-1.9
		173	-6.6	-1.9
		172	-6.6	0.3
	Min	Cent	-17.4	-3.2
		169	-6.5	-2.9
		170	-6.5	-4.9
		173	-28.3	-4.9
		172	-28.3	-2.9

ELEM	MAT	SEC	LC		NODE	Fxx	Fyy	Fxy	Fmax	Fmin	ANGLE
135	1	1	SX (RS)		Cent	0.7	2.2	0.7	2.5	0.5	69.39
					171	0.3	2.7	0.7	2.8	0.2	75.20

	172	0.3	1.8	0.7	2.1	0.1	68.99
	174	1.1	1.8	0.7	2.2	0.7	59.01
	19	1.1	2.7	0.7	2.9	0.9	69.90

	NODE	Mxx	Myy	Mxy	Mmax	Mmin	ANGLE
	Cent	0.9	2.0	0.7	2.3	0.6	65.66
	171	0.5	2.5	0.5	2.6	0.4	76.98
	172	1.1	1.2	0.5	1.7	0.6	49.21
	174	2.4	4.2	0.7	4.5	2.2	70.58
	19	0.4	2.1	0.7	2.3	0.2	71.09

	NODE	Vxx	Vyy
	Cent	3.2	4.7
	171	2.1	1.8
	172	2.1	9.0
	174	4.3	9.0
	19	4.3	1.8

LC		NODE	Fxx	Fyy	Fxy	Fmax	Fmin	ANGLE
SY (RS)		Cent	0.3	1.6	0.4	1.7	0.2	76.05
		171	0.5	2.0	0.4	2.1	0.5	77.15
		172	0.5	1.8	0.4	1.9	0.4	75.74
		174	0.3	1.8	0.4	1.9	0.2	77.57
		19	0.3	2.0	0.4	2.1	0.2	78.68

	NODE	Mxx	Myy	Mxy	Mmax	Mmin	ANGLE
	Cent	0.4	2.2	0.5	2.4	0.2	75.65
	171	0.3	2.4	0.8	2.7	0.0	71.01
	172	1.5	4.3	0.7	4.5	1.3	76.20
	174	1.1	4.0	0.6	4.1	1.0	78.58
	19	0.5	4.3	0.6	4.4	0.4	81.76

	NODE	Vxx	Vyy
	Cent	1.6	5.9
	171	2.5	3.5
	172	2.5	14.0
	174	1.3	14.0
	19	1.3	3.5

LC		NODE	Fxx	Fyy	Fxy	Fmax	Fmin	ANGLE
RC ENV~1	Max	Cent	1.1	1.8	1.2	2.4	0.4	57.61
		171	0.6	2.0	1.2	2.4	0.3	65.19
		172	0.6	1.7	1.2	2.2	0.3	62.06
		174	1.9	1.7	1.2	2.5	0.7	47.82
		19	1.9	2.0	1.2	2.7	0.8	52.60
	Min	Cent	-0.5	-2.6	-0.4	-0.4	-2.7	-10.00
		171	-0.5	-3.3	-0.4	-0.5	-3.4	-2.08
		172	-0.5	-2.0	-0.4	-0.5	-2.0	-3.05
		174	-0.7	-2.0	-0.4	-0.6	-2.0	-16.23
		19	-0.7	-3.3	-0.4	-0.6	-3.4	-8.27

	NODE	Mxx	Myy	Mxy	Mmax	Mmin	ANGLE
Max	Cent	1.4	3.5	0.5	3.6	1.3	83.30
	171	0.3	3.3	0.5	3.3	0.3	87.47
	172	3.2	6.9	0.2	7.0	3.2	86.22
	174	3.1	5.5	0.6	5.6	3.0	76.12
	19	0.3	4.8	0.7	4.9	0.2	82.45
Min	Cent	-0.4	-0.9	-1.7	0.3	-1.4	-38.93
	171	-0.7	-1.7	-1.9	-0.2	-2.4	-29.74
	172	0.2	-1.7	-2.1	0.8	-2.3	-25.78
	174	-1.7	-2.9	-1.5	-1.3	-3.3	-26.64
	19	-0.6	-3.8	-1.3	-0.5	-3.9	-9.20

	NODE	Vxx	Vyy
Max	Cent	1.1	7.3
	171	-0.4	5.7
	172	-0.4	16.2
	174	3.0	16.2
	19	3.0	5.7

	Min	Cent	-5.3	-4.6
		171	-5.4	-3.0
		172	-5.4	-11.9
		174	-5.6	-11.9
		19	-5.6	-3.0

LC		NODE	Fxx	Fyy	Fxy	Fmax	Fmin	ANGLE
RC ENV~2	Max	Cent	0.8	0.3	0.8	1.1	-0.0	18.27
		171	0.3	0.4	0.8	0.6	-0.1	17.14
		172	0.3	0.3	0.8	0.8	-0.0	28.74
		174	1.3	0.3	0.8	1.6	-0.0	19.55
		19	1.3	0.4	0.8	1.5	-0.1	12.94
	Min	Cent	-0.2	-1.4	-0.2	-0.0	-1.7	76.85
		171	-0.1	-2.1	-0.2	-0.0	-2.4	8.44
		172	-0.1	-0.7	-0.2	0.1	-1.2	85.91
		174	-0.3	-0.7	-0.2	0.1	-1.0	86.12
		19	-0.3	-2.1	-0.2	-0.0	-2.3	9.50

	NODE	Mxx	Myy	Mxy	Mmax	Mmin	ANGLE
Max	Cent	0.8	1.7	-0.2	1.9	0.5	-67.97
	171	0.1	1.2	-0.3	1.9	-0.3	-59.11
	172	1.9	4.4	-0.5	4.8	1.6	-70.65
	174	1.5	2.0	-0.1	2.4	1.0	-52.60
	19	-0.1	0.7	0.1	0.7	-0.1	85.22
Min	Cent	0.1	0.6	-1.1	1.3	-0.6	-58.23
	171	-0.5	0.7	-1.3	0.9	-1.1	-71.66
	172	1.4	1.1	-1.4	2.5	0.1	-34.09
	174	-0.6	0.1	-1.0	0.5	-0.8	-67.25
	19	-0.4	-1.1	-0.8	0.0	-1.6	-30.40

	NODE	Vxx	Vyy
Max	Cent	-0.7	4.2
	171	-2.3	3.7
	172	-2.3	6.2
	174	0.9	6.2
	19	0.9	3.7
Min	Cent	-3.0	0.2
	171	-3.2	0.3
	172	-3.2	-1.6
	174	-2.7	-1.6
	19	-2.7	0.3

ELEM	MAT	SEC	LC		NODE	Fxx	Fyy	Fxy	Fmax	Fmin	ANGLE
136	1	1	SX (RS)		Cent	3.3	1.6	3.2	5.8	-0.9	37.42
					172	2.5	1.7	3.2	5.3	-1.2	41.57
					173	2.5	1.9	3.2	5.4	-1.1	42.28
					11	9.0	1.9	3.2	10.3	0.6	20.98
					174	9.0	1.7	3.2	10.2	0.5	20.66

	NODE	Mxx	Myy	Mxy	Mmax	Mmin	ANGLE
	Cent	7.0	2.2	2.5	8.1	1.1	23.12
	172	1.8	1.2	1.3	2.8	0.2	38.33
	173	9.6	2.1	7.9	14.6	-2.9	32.25
	11	33.1	6.7	7.4	35.0	4.7	14.68
	174	2.8	4.3	1.8	5.5	1.6	56.54

	NODE	Vxx	Vyy
	Cent	16.9	4.6
	172	20.1	9.0
	173	20.1	0.2
	11	54.0	0.2
	174	54.0	9.0

LC		NODE	Fxx	Fyy	Fxy	Fmax	Fmin	ANGLE
SY (RS)		Cent	0.9	5.0	2.7	6.3	-0.5	63.77
		172	1.1	1.8	2.7	4.2	-1.3	48.51
		173	1.1	11.4	2.7	12.0	0.4	76.10
		11	2.7	11.4	2.7	12.1	1.9	74.00
		174	2.7	1.8	2.7	5.0	-0.5	40.10

	NODE	Mxx	Myy	Mxy	Mmax	Mmin	ANGLE
	Cent	2.7	7.9	1.8	8.5	2.1	72.41
	172	0.8	4.0	0.8	4.2	0.6	76.24
	173	3.6	5.3	2.5	7.1	1.7	54.09
	11	9.8	25.4	5.0	26.9	8.3	73.65
	174	1.2	4.0	4.8	7.6	-2.3	53.01

	NODE	Vxx	Vyy
	Cent	5.5	11.9
	172	7.1	14.0
	173	7.1	37.6
	11	13.1	37.6
	174	13.1	14.0

LC		NODE	Fxx	Fyy	Fxy	Fmax	Fmin	ANGLE
RC ENV~1	Max	Cent	5.6	5.6	5.8	9.7	-0.2	35.22
		172	1.3	1.8	5.8	6.1	-0.2	46.57
		173	1.3	12.5	5.8	13.6	-0.1	73.57
		11	16.0	12.5	5.8	18.3	4.3	21.01
		174	16.0	1.8	5.8	17.9	0.1	17.79
	Min	Cent	-2.1	-4.4	-1.9	0.4	-4.8	-78.14
		172	-4.9	-1.7	-1.9	-0.6	-8.8	-51.35
		173	-4.9	-10.3	-1.9	-2.1	-10.5	-9.39
		11	-5.4	-10.3	-1.9	-0.1	-10.4	-70.64
		174	-5.4	-1.7	-1.9	-0.9	-6.2	-67.73

	NODE	Mxx	Myy	Mxy	Mmax	Mmin	ANGLE
Max	Cent	9.7	10.6	0.3	10.6	5.4	-86.11
	172	4.0	6.7	0.6	6.8	3.3	-67.49
	173	23.3	5.8	3.8	30.1	5.5	-25.98
	11	32.6	32.2	3.7	33.3	12.7	10.57
	174	1.4	5.1	4.5	7.4	0.9	59.60
Min	Cent	-4.3	-5.2	-6.8	2.2	-7.4	-28.53
	172	0.4	-1.3	-2.7	2.1	-2.0	-23.93
	173	0.9	-4.7	-13.9	6.5	-12.4	-6.21
	11	-33.6	-18.7	-12.7	-4.8	-36.9	-32.11
	174	-5.8	-3.4	-5.1	-1.7	-7.9	-50.03

	NODE	Vxx	Vyy
Max	Cent	9.3	5.0
	172	4.3	16.2
	173	4.3	21.5
	11	54.5	21.5
	174	54.5	16.2
Min	Cent	-24.6	-18.9
	172	-39.2	-11.9
	173	-39.2	-53.7
	11	-53.5	-53.7
	174	-53.5	-11.9

LC		NODE	Fxx	Fyy	Fxy	Fmax	Fmin	ANGLE
RC ENV~2	Max	Cent	3.9	1.1	4.1	6.8	-0.1	35.37
		172	0.5	0.1	4.1	2.6	-0.2	55.97
		173	0.5	2.2	4.1	4.4	-0.1	62.40
		11	11.2	2.2	4.1	12.7	0.7	21.11
		174	11.2	0.1	4.1	12.5	-0.1	17.83
	Min	Cent	-1.0	0.2	-0.8	0.3	-1.8	81.71
		172	-3.4	-0.1	-0.8	0.1	-6.1	75.73
		173	-3.4	0.2	-0.8	0.5	-5.5	84.82
		11	-2.5	0.2	-0.8	0.4	-2.8	-74.56
		174	-2.5	-0.1	-0.8	0.1	-2.8	70.56

	NODE	Mxx	Myy	Mxy	Mmax	Mmin	ANGLE
Max	Cent	4.9	3.7	-1.4	6.9	1.6	-55.52
	172	2.5	4.4	-0.6	4.9	1.8	-67.72
	173	17.0	1.3	-1.0	21.6	-0.7	-25.47
	11	11.5	9.6	-1.0	11.8	6.7	-71.77
	174	-0.1	1.6	-0.1	2.3	-0.8	-60.94
Min	Cent	-0.4	2.0	-4.8	4.9	-3.7	-41.38

172	1.8	1.2	-1.8	3.1	-0.1	-49.69
173	5.7	-0.7	-9.7	5.9	-3.5	-9.07
11	-16.4	5.6	-8.9	8.3	-19.3	-67.08
174	-4.1	-0.4	-1.6	-0.3	-4.1	-80.48

	NODE	Vxx	Vyy
Max	Cent	-1.3	-6.9
	172	-6.6	6.2
	173	-6.6	-12.3
	11	25.6	-12.3
	174	25.6	6.2
Min	Cent	-12.9	-10.5
	172	-28.3	-1.6
	173	-28.3	-27.0
	11	-19.1	-27.0
	174	-19.1	-1.6

ELEM	MAT	SEC	LC		NODE	Fxx	Fyy	Fxy	Fmax	Fmin	ANGLE
137	1	1	SX	(RS)	Cent	3.3	1.5	3.1	5.7	-0.9	36.88
					174	9.0	1.7	3.1	10.2	0.5	20.24
					11	9.0	1.7	3.1	10.2	0.6	20.41
					177	2.5	1.7	3.1	5.3	-1.1	41.77
					176	2.5	1.7	3.1	5.2	-1.1	41.37

	NODE	Mxx	Myy	Mxy	Mmax	Mmin	ANGLE
	Cent	7.0	2.2	2.8	8.3	0.9	24.70
	174	2.8	4.2	1.6	5.2	1.7	57.10
	11	33.0	6.5	7.7	35.1	4.5	15.01
	177	9.6	2.1	8.2	14.8	-3.2	32.71
	176	1.8	1.4	1.2	2.8	0.4	39.24

	NODE	Vxx	Vyy
	Cent	17.0	4.3
	174	54.0	8.8
	11	54.0	0.4
	177	20.1	0.4
	176	20.1	8.8

LC		NODE	Fxx	Fyy	Fxy	Fmax	Fmin	ANGLE
SY	(RS)	Cent	0.9	4.9	2.4	6.0	-0.3	65.00
		174	2.7	2.1	2.4	4.8	-0.0	41.44
		11	2.7	11.3	2.4	11.9	2.0	75.50
		177	1.1	11.3	2.4	11.8	0.5	77.47
		176	1.1	2.1	2.4	4.0	-0.9	50.94

	NODE	Mxx	Myy	Mxy	Mmax	Mmin	ANGLE
	Cent	2.4	5.1	1.5	5.8	1.7	65.78
	174	1.3	6.7	4.9	9.6	-1.6	59.44
	11	9.1	22.0	4.7	23.5	7.6	71.97
	177	3.3	2.9	1.8	4.8	1.3	41.90
	176	0.9	1.4	1.0	2.2	0.1	52.18

	NODE	Vxx	Vyy
	Cent	4.9	10.9
	174	13.1	14.4
	11	13.1	35.9
	177	6.9	35.9
	176	6.9	14.4

LC		NODE	Fxx	Fyy	Fxy	Fmax	Fmin	ANGLE
RC ENV~1	Max	Cent	5.6	5.3	1.8	9.7	1.7	-35.32
		174	16.0	2.2	1.8	17.9	1.9	-17.87
		11	16.0	12.1	1.8	18.3	6.1	-21.11
		177	1.3	12.1	1.8	12.2	0.0	85.06
		176	1.3	2.2	1.8	3.8	-0.2	-55.88
	Min	Cent	-2.1	-4.4	-5.8	0.2	-6.4	64.29
		174	-5.4	-1.9	-5.8	0.2	-8.4	75.11
		11	-5.4	-10.5	-5.8	-0.0	-11.6	70.52

177	-4.8	-10.5	-5.8	-0.8	-11.9	-21.07
176	-4.8	-1.9	-5.8	0.4	-8.8	-63.36

	NODE	Mxx	Myy	Mxy	Mmax	Mmin	ANGLE
Max	Cent	9.7	7.4	5.9	12.9	2.5	31.58
	174	1.3	7.1	5.2	9.8	0.5	62.66
	11	32.8	30.3	11.4	38.4	11.7	25.85
	177	22.5	1.7	13.1	28.4	-0.9	24.05
	176	4.1	4.3	2.1	5.7	2.3	36.70
Min	Cent	-4.3	-2.8	-0.4	0.1	-4.8	-84.38
	174	-6.0	-6.3	-4.6	-2.7	-9.5	-50.02
	11	-33.2	-13.7	-3.9	-9.1	-33.6	-11.65
	177	0.6	-4.0	-3.8	2.9	-6.8	-31.58
	176	0.4	0.1	-0.4	0.6	-0.1	-30.87

	NODE	Vxx	Vyy
Max	Cent	9.6	21.7
	174	54.5	13.8
	11	54.5	58.0
	177	4.8	58.0
	176	4.8	13.8
Min	Cent	-24.3	-0.2
	174	-53.5	-15.0
	11	-53.5	-13.8
	177	-38.1	-13.8
	176	-38.1	-15.0

LC		NODE	Fxx	Fyy	Fxy	Fmax	Fmin	ANGLE
RC ENV~2	Max	Cent	3.9	1.1	0.9	6.8	-0.1	-35.42
		174	11.2	0.2	0.9	12.5	-0.1	-17.91
		11	11.2	2.2	0.9	12.8	0.7	-21.16
		177	0.5	2.2	0.9	4.4	-0.1	-62.32
		176	0.5	0.2	0.9	2.7	-0.1	-55.99
	Min	Cent	-1.0	-0.0	-4.1	0.1	-1.8	83.03
		174	-2.6	-0.1	-4.1	0.1	-2.8	83.74
		11	-2.6	-0.3	-4.1	0.0	-2.9	71.03
		177	-3.4	-0.3	-4.1	0.1	-5.5	82.14
		176	-3.4	-0.1	-4.1	0.1	-6.1	83.65

	NODE	Mxx	Myy	Mxy	Mmax	Mmin	ANGLE
Max	Cent	4.9	3.1	4.3	6.1	1.8	55.15
	174	-0.2	1.1	0.4	1.1	-0.3	81.70
	11	11.9	11.2	8.2	12.8	8.7	73.43
	177	16.4	-0.6	9.4	20.5	-2.3	23.75
	176	2.5	3.1	1.1	3.5	1.8	61.90
Min	Cent	-0.4	1.6	0.5	3.5	-3.2	37.94
	174	-4.2	-1.0	-1.0	-0.7	-4.2	-70.53
	11	-16.0	7.4	-0.1	8.6	-18.4	66.60
	177	5.3	-2.3	0.3	5.3	-4.9	2.40
	176	1.8	0.3	-0.1	1.9	0.1	-18.37

	NODE	Vxx	Vyy
Max	Cent	-0.9	14.5
	174	25.6	2.3
	11	25.6	33.3
	177	-6.0	33.3
	176	-6.0	2.3
Min	Cent	-12.5	10.5
	174	-19.1	-4.9
	11	-19.1	18.6
	177	-27.5	18.6
	176	-27.5	-4.9

ELEM	MAT	SEC	LC		NODE	Fxx	Fyy	Fxy	Fmax	Fmin	ANGLE
138	1	1	SX (RS)		Cent	0.1	1.9	1.1	2.4	-0.4	64.97
					175	0.7	2.2	1.1	2.8	0.1	62.56
					176	0.7	2.0	1.1	2.6	0.1	60.50
					179	0.7	2.0	1.1	2.6	0.0	60.68
					178	0.7	2.2	1.1	2.8	0.1	62.72

	NODE	Mxx	Myy	Mxy	Mmax	Mmin	ANGLE

	Cent	0.4	1.1	1.1	1.8	-0.4	54.33
	175	0.4	2.3	1.0	2.7	-0.0	67.13
	176	1.6	2.0	1.1	3.0	0.6	49.32
	179	0.7	1.9	1.1	2.6	0.0	58.89
	178	0.1	1.3	1.0	1.9	-0.5	60.44

NODE	Vxx	Vyy
Cent	0.7	5.0
175	2.2	5.3
176	2.2	5.5
179	1.1	5.5
178	1.1	5.3

LC	NODE	Fxx	Fyy	Fxy	Fmax	Fmin	ANGLE
SY (RS)	Cent	0.1	1.4	0.6	1.6	-0.1	68.84
	175	0.7	2.4	0.6	2.5	0.5	72.50
	176	0.7	1.8	0.6	2.1	0.5	66.94
	179	0.5	1.8	0.6	2.0	0.3	69.46
	178	0.5	2.4	0.6	2.5	0.3	74.11

NODE	Mxx	Myy	Mxy	Mmax	Mmin	ANGLE
Cent	0.4	1.1	0.4	1.3	0.2	68.68
175	0.3	1.1	0.3	1.2	0.2	71.98
176	1.3	2.1	0.2	2.1	1.3	75.53
179	0.2	0.6	0.3	0.8	0.0	59.30
178	0.1	1.2	0.5	1.3	-0.0	69.53

NODE	Vxx	Vyy
Cent	1.3	1.1
175	2.1	1.0
176	2.1	2.8
179	0.4	2.8
178	0.4	1.0

LC		NODE	Fxx	Fyy	Fxy	Fmax	Fmin	ANGLE
RC ENV~1	Max	Cent	0.1	2.3	0.6	2.6	0.1	-53.57
		175	1.1	2.3	0.6	2.5	0.9	-34.10
		176	1.1	2.8	0.6	4.1	0.9	-56.35
		179	0.3	2.8	0.6	3.6	0.2	-67.74
		178	0.3	2.3	0.6	2.3	0.2	72.60
	Min	Cent	-0.2	-1.6	-2.0	0.0	-2.6	39.62
		175	-0.5	-2.4	-2.0	-0.1	-3.2	35.86
		176	-0.5	-1.2	-2.0	0.1	-2.4	60.85
		179	-1.3	-1.2	-2.0	0.1	-2.6	43.57
		178	-1.3	-2.4	-2.0	-0.3	-3.3	-26.17

NODE		Mxx	Myy	Mxy	Mmax	Mmin	ANGLE
Max	Cent	1.2	0.1	1.6	2.3	-0.5	35.08
	175	0.2	1.7	1.5	2.6	-0.6	58.46
	176	3.0	1.6	2.0	4.4	1.0	34.55
	179	2.9	-0.0	1.8	3.4	-1.0	27.15
	178	0.4	-0.1	1.3	1.5	-0.7	39.98
Min	Cent	0.5	-2.7	-0.6	0.5	-2.8	4.80
	175	-0.6	-2.8	-0.7	-0.5	-2.9	-10.40
	176	-0.2	-2.5	-0.4	-0.2	-2.7	-7.83
	179	1.1	-4.0	-0.6	1.1	-4.0	-6.04
	178	0.1	-4.5	-0.8	0.2	-4.7	-2.71

NODE		Vxx	Vyy
Max	Cent	-1.6	7.4
	175	-0.7	7.3
	176	-0.7	8.5
	179	-1.8	8.5
	178	-1.8	7.3
Min	Cent	-4.2	-2.6
	175	-5.0	-3.5
	176	-5.0	-2.5
	179	-4.8	-2.5
	178	-4.8	-3.5

LC		NODE	Fxx	Fyy	Fxy	Fmax	Fmin	ANGLE
RC ENV~2	Max	Cent	-0.0	0.8	0.3	1.8	-0.1	-53.77
		175	0.8	-0.1	0.3	1.7	-0.1	-34.24
		176	0.8	2.0	0.3	2.9	-0.0	-56.60
		179	0.1	2.0	0.3	2.6	-0.0	-67.88
		178	0.1	-0.1	0.3	0.8	-0.1	-50.76
	Min	Cent	-0.1	-0.1	-1.4	-0.0	-1.1	78.88
		175	-0.2	-0.4	-1.4	-0.1	-1.3	5.05
		176	-0.2	-0.2	-1.4	0.1	-0.5	45.09
		179	-0.9	-0.2	-1.4	0.1	-1.5	87.28
		178	-0.9	-0.4	-1.4	-0.0	-2.1	4.07

		NODE	Mxx	Myy	Mxy	Mmax	Mmin	ANGLE
	Max	Cent	0.8	-1.0	1.0	1.1	-1.2	23.45
		175	-0.0	-0.5	0.9	0.4	-0.5	43.59
		176	1.8	-0.3	1.4	1.9	-0.5	22.95
		179	2.2	-1.6	1.1	2.5	-1.7	14.30
		178	0.3	-1.1	0.6	0.5	-1.3	17.49
	Min	Cent	0.7	-1.9	-0.3	0.7	-1.9	-1.20
		175	-0.4	-0.6	-0.3	-0.2	-1.3	16.24
		176	0.7	-1.4	-0.1	0.9	-1.6	6.86
		179	1.3	-2.9	-0.3	1.3	-2.9	-1.13
		178	0.1	-3.1	-0.5	0.2	-3.2	-8.16

		NODE	Vxx	Vyy
	Max	Cent	-2.5	4.2
		175	-2.2	5.0
		176	-2.2	4.6
		179	-2.1	4.6
		178	-2.1	5.0
	Min	Cent	-3.0	1.8
		175	-3.2	1.4
		176	-3.2	1.3
		179	-3.6	1.3
		178	-3.6	1.4

ELEM	MAT	SEC	LC		NODE	Fxx	Fyy	Fxy	Fmax	Fmin	ANGLE
139	1	1	SX (RS)		Cent	1.4	1.4	1.0	2.4	0.4	45.96
					176	2.4	1.9	1.0	3.2	1.1	37.04
					177	2.4	1.0	1.0	3.0	0.5	27.87
					180	0.4	1.0	1.0	1.8	-0.4	54.15
					179	0.4	1.9	1.0	2.4	-0.2	63.00

		NODE	Mxx	Myy	Mxy	Mmax	Mmin	ANGLE
		Cent	2.3	1.0	1.6	3.4	-0.0	34.04
		176	2.3	2.1	1.9	4.1	0.4	43.28
		177	9.6	2.2	1.0	9.7	2.1	7.38
		180	1.1	0.8	1.1	2.1	-0.2	41.93
		179	1.0	2.0	2.0	3.6	-0.6	51.65

		NODE	Vxx	Vyy
		Cent	10.3	2.8
		176	20.1	5.5
		177	20.1	0.2
		180	0.5	0.2
		179	0.5	5.5

LC		NODE	Fxx	Fyy	Fxy	Fmax	Fmin	ANGLE
SY (RS)		Cent	0.9	2.5	0.2	2.5	0.9	83.57
		176	1.4	1.7	0.2	1.8	1.4	62.94
		177	1.4	3.4	0.2	3.4	1.4	84.76
		180	0.4	3.4	0.2	3.4	0.4	86.54
		179	0.4	1.7	0.2	1.7	0.4	82.17

		NODE	Mxx	Myy	Mxy	Mmax	Mmin	ANGLE
		Cent	0.9	1.1	0.5	1.5	0.5	52.76
		176	1.0	1.9	0.4	2.1	0.9	68.06

		177	3.2	2.5	0.5	3.5	2.2	28.94
		180	0.6	1.1	0.5	1.4	0.3	57.64
		179	0.7	0.6	0.4	1.1	0.2	42.86

	NODE	Vxx	Vyy
	Cent	3.5	3.9
	176	6.9	2.8
	177	6.9	5.4
	180	0.2	5.4
	179	0.2	2.8

LC		NODE	Fxx	Fyy	Fxy	Fmax	Fmin	ANGLE
RC ENV~1	Max	Cent	0.7	3.1	0.5	3.1	0.5	-83.76
		176	1.3	2.5	0.5	2.8	1.1	-74.97
		177	1.3	3.9	0.5	3.9	0.9	-85.02
		180	0.2	3.9	0.5	3.9	0.2	-85.17
		179	0.2	2.5	0.5	3.3	0.1	-63.49
	Min	Cent	-2.8	-1.9	-2.0	-1.1	-3.6	-39.38
		176	-4.8	-1.2	-2.0	-0.8	-5.3	-69.54
		177	-4.8	-2.9	-2.0	-2.0	-5.4	-39.80
		180	-0.8	-2.9	-2.0	-0.5	-3.0	-15.96
		179	-0.8	-1.2	-2.0	-0.2	-2.5	-37.51

	NODE	Mxx	Myy	Mxy	Mmax	Mmin	ANGLE
Max	Cent	8.9	0.1	2.3	9.2	-0.1	10.47
	176	4.2	1.8	3.2	6.4	0.4	34.22
	177	23.5	4.0	1.3	23.5	4.0	1.22
	180	6.7	-1.8	1.1	6.7	-1.8	-2.20
	179	3.9	0.1	2.9	5.0	-1.6	30.61
Min	Cent	2.6	-2.7	-0.9	2.7	-2.8	-10.11
	176	-0.4	-2.5	-0.6	-0.3	-3.2	-15.06
	177	1.0	-1.4	-1.1	1.2	-1.4	-15.54
	180	3.8	-5.2	-1.5	3.9	-5.4	-8.58
	179	1.3	-3.9	-1.1	1.5	-4.1	-11.61

	NODE	Vxx	Vyy
Max	Cent	0.2	8.2
	176	4.8	8.5
	177	4.8	11.2
	180	-4.4	11.2
	179	-4.4	8.5
Min	Cent	-22.2	0.3
	176	-38.1	-2.5
	177	-38.1	0.1
	180	-6.2	0.1
	179	-6.2	-2.5

LC		NODE	Fxx	Fyy	Fxy	Fmax	Fmin	ANGLE
RC ENV~2	Max	Cent	0.3	1.3	0.3	1.8	-0.0	-69.27
		176	0.6	1.6	0.3	2.0	0.0	-75.01
		177	0.6	1.0	0.3	1.4	0.1	-73.72
		180	-0.0	1.0	0.3	1.8	-0.1	-58.96
		179	-0.0	1.6	0.3	2.3	-0.1	-63.66
	Min	Cent	-2.0	0.0	-1.4	0.2	-2.5	-82.93
		176	-3.3	-0.2	-1.4	0.1	-3.7	-79.93
		177	-3.3	0.2	-1.4	0.3	-3.8	-84.58
		180	-0.6	0.2	-1.4	0.3	-1.4	-84.57
		179	-0.6	-0.2	-1.4	0.1	-1.3	75.65

	NODE	Mxx	Myy	Mxy	Mmax	Mmin	ANGLE
Max	Cent	6.6	-0.8	1.4	6.8	-1.0	10.48
	176	2.4	-0.2	2.3	2.8	-0.5	33.69
	177	17.1	2.9	0.4	17.1	2.9	1.50
	180	5.2	-2.9	0.1	5.2	-2.9	-1.65
	179	2.9	-1.5	1.9	3.6	-1.8	19.76
Min	Cent	3.4	-1.9	-0.4	3.4	-1.9	-2.66
	176	1.1	-1.3	-0.0	1.5	-2.3	15.89
	177	5.7	-0.5	-0.6	5.7	-0.5	-2.51
	180	3.8	-3.8	-0.9	3.9	-3.9	-4.64
	179	1.6	-2.8	-0.3	1.6	-2.8	-3.23

	NODE	Vxx	Vyy
Max	Cent	-5.2	5.8
	176	-6.0	4.6
	177	-6.0	8.2
	180	-4.1	8.2
	179	-4.1	4.6
Min	Cent	-16.2	3.9
	176	-27.5	1.3
	177	-27.5	4.7
	180	-5.0	4.7
	179	-5.0	1.3

ELEM	MAT	SEC	LC	NODE	Fxx	Fyy	Fxy	Fmax	Fmin	ANGLE
140	1	1	SX (RS)	Cent	0.2	2.3	0.3	2.3	0.2	81.47
				178	0.5	3.0	0.3	3.0	0.5	83.00
				179	0.5	1.6	0.3	1.7	0.4	74.97
				182	0.1	1.6	0.3	1.6	0.0	78.59
				181	0.1	3.0	0.3	3.0	0.1	83.95

NODE	Mxx	Myy	Mxy	Mmax	Mmin	ANGLE
Cent	0.4	1.6	1.3	2.5	-0.5	57.38
178	0.4	2.2	1.3	2.8	-0.3	63.17
179	0.6	1.5	1.3	2.4	-0.3	54.64
182	0.8	1.7	1.3	2.7	-0.1	54.48
181	0.3	2.3	1.3	2.9	-0.3	63.46

NODE	Vxx	Vyy
Cent	1.2	2.6
178	1.1	5.6
179	1.1	0.6
182	1.2	0.6
181	1.2	5.6

LC	NODE	Fxx	Fyy	Fxy	Fmax	Fmin	ANGLE
SY (RS)	Cent	0.3	1.3	0.2	1.3	0.2	80.38
	178	0.5	1.5	0.2	1.5	0.5	80.07
	179	0.5	1.3	0.2	1.3	0.5	77.88
	182	0.0	1.3	0.2	1.3	-0.0	82.28
	181	0.0	1.5	0.2	1.5	-0.0	83.26

NODE	Mxx	Myy	Mxy	Mmax	Mmin	ANGLE
Cent	0.1	1.0	0.3	1.1	-0.0	70.39
178	0.1	0.9	0.3	1.0	-0.1	70.49
179	0.2	0.8	0.4	1.0	0.0	61.96
182	0.1	1.4	0.3	1.5	0.0	76.17
181	0.1	1.1	0.3	1.2	0.0	75.98

NODE	Vxx	Vyy
Cent	0.3	1.8
178	0.4	1.3
179	0.4	2.4
182	0.2	2.4
181	0.2	1.3

LC		NODE	Fxx	Fyy	Fxy	Fmax	Fmin	ANGLE
RC ENV~1	Max	Cent	0.1	3.0	0.2	3.0	0.1	86.93
		178	0.3	3.9	0.2	3.9	0.3	87.52
		179	0.3	2.2	0.2	2.2	0.3	85.45
		182	0.1	2.2	0.2	2.2	0.0	85.83
		181	0.1	3.9	0.2	3.9	0.1	87.64
	Min	Cent	-0.5	-1.5	-0.6	-0.2	-1.7	-19.67
		178	-1.0	-2.1	-0.6	-0.6	-2.3	-17.03
		179	-1.0	-0.9	-0.6	-0.4	-1.3	-49.54
		182	-0.1	-0.9	-0.6	0.0	-1.1	35.55
		181	-0.1	-2.1	-0.6	-0.1	-2.2	4.10

NODE	Mxx	Myy	Mxy	Mmax	Mmin	ANGLE

Max	Cent	1.4	-0.8	1.5	2.1	-1.6	27.64
	178	0.5	0.1	1.5	1.8	-1.2	41.17
	179	2.9	-0.4	1.5	3.1	-1.1	23.78
	182	2.3	-1.4	1.4	2.7	-1.8	18.97
	181	0.5	-0.4	1.4	1.5	-1.4	35.72
Min	Cent	0.5	-4.8	-1.2	0.8	-4.9	-13.29
	178	-0.2	-4.3	-1.0	0.0	-4.6	-13.09
	179	1.2	-4.2	-1.0	1.4	-4.4	-11.91
	182	0.6	-5.9	-1.2	0.9	-5.9	-11.98
	181	-0.1	-6.2	-1.2	0.0	-6.4	-7.72

	NODE	Vxx	Vyy
Max	Cent	-1.5	4.3
	178	-1.8	6.8
	179	-1.8	5.2
	182	-1.2	5.2
	181	-1.2	6.8
Min	Cent	-4.3	-0.9
	178	-4.8	-4.4
	179	-4.8	-0.2
	182	-3.8	-0.2
	181	-3.8	-4.4

LC		NODE	Fxx	Fyy	Fxy	Fmax	Fmin	ANGLE
RC ENV~2	Max	Cent	0.0	2.0	0.1	2.1	-0.0	-79.59
		178	0.1	2.6	0.1	2.6	-0.2	-82.43
		179	0.1	1.4	0.1	1.5	-0.0	-78.36
		182	-0.0	1.4	0.1	1.5	-0.0	-73.72
		181	-0.0	2.6	0.1	2.7	-0.1	-80.59
	Min	Cent	-0.4	-0.4	-0.4	-0.0	-0.4	9.21
		178	-0.7	-0.7	-0.4	-0.0	-0.8	-4.78
		179	-0.7	-0.0	-0.4	0.1	-0.8	26.81
		182	-0.1	-0.0	-0.4	0.0	-0.2	49.82
		181	-0.1	-0.7	-0.4	-0.1	-0.7	2.29

	NODE	Mxx	Myy	Mxy	Mmax	Mmin	ANGLE
Max	Cent	1.1	-2.4	0.6	1.1	-2.4	8.67
	178	0.3	-1.9	0.6	0.4	-1.9	-11.95
	179	2.2	-1.8	0.7	2.3	-1.8	9.38
	182	1.7	-3.1	0.5	1.7	-3.1	2.92
	181	0.3	-2.6	0.5	0.4	-2.6	7.93
Min	Cent	0.6	-3.5	-0.6	0.7	-3.5	-6.28
	178	0.1	-2.9	-0.6	0.1	-3.0	7.08
	179	1.3	-3.0	-0.6	1.3	-3.1	-5.06
	182	1.0	-4.3	-0.7	1.0	-4.3	-5.86
	181	-0.0	-4.4	-0.7	0.0	-4.5	-6.49

	NODE	Vxx	Vyy
Max	Cent	-1.9	2.7
	178	-2.1	4.0
	179	-2.1	3.8
	182	-1.6	3.8
	181	-1.6	4.0
Min	Cent	-3.2	1.7
	178	-3.6	0.6
	179	-3.6	1.5
	182	-2.9	1.5
	181	-2.9	0.6

ELEM	MAT	SEC	LC		NODE	Fxx	Fyy	Fxy	Fmax	Fmin	ANGLE
141	1	1	SX (RS)		Cent	0.3	1.3	0.6	1.5	0.0	64.23
					179	0.4	1.6	0.6	1.8	0.1	68.09
					180	0.4	0.9	0.6	1.3	-0.0	57.55
					183	0.3	0.9	0.6	1.3	-0.1	59.45
					182	0.3	1.6	0.6	1.8	0.0	69.18

	NODE	Mxx	Myy	Mxy	Mmax	Mmin	ANGLE
	Cent	1.4	1.3	1.6	3.0	-0.3	44.39
	179	1.0	1.6	1.6	2.9	-0.3	50.67
	180	1.1	0.9	1.8	2.8	-0.8	43.57
	183	2.3	1.0	1.7	3.5	-0.1	34.47

```
                    182        1.2        1.8        1.5        3.0       -0.0      50.50

                   NODE        Vxx        Vyy
             ---- ------ ---------- ----------
                   Cent        1.4        0.2
                    179        0.5        0.6
                    180        0.5        0.3
                    183        2.3        0.3
                    182        2.3        0.6


      LC        NODE        Fxx        Fyy        Fxy       Fmax       Fmin      ANGLE
-------- ---- ------ ---------- ---------- ---------- ---------- ---------- ----------
      SY (RS)   Cent        0.4        1.3        0.3        1.4        0.3      72.16
                 179        0.7        1.3        0.3        1.4        0.6      65.31
                 180        0.7        1.5        0.3        1.6        0.6      69.35
                 183        0.1        1.5        0.3        1.5        0.1      77.04
                 182        0.1        1.3        0.3        1.4        0.1      75.32

                NODE        Mxx        Myy        Mxy       Mmax       Mmin      ANGLE
             ---- ------ ---------- ---------- ---------- ---------- ---------- ----------
                   Cent        0.4        1.0        0.3        1.1        0.3      67.98
                    179        0.7        0.8        0.4        1.1        0.3      48.46
                    180        0.7        0.8        0.3        1.1        0.5      50.19
                    183        0.2        1.6        0.2        1.6        0.2      81.89
                    182        0.1        1.4        0.3        1.5        0.0      76.39

                   NODE        Vxx        Vyy
             ---- ------ ---------- ----------
                   Cent        0.1        2.3
                    179        0.2        2.4
                    180        0.2        2.1
                    183        0.3        2.1
                    182        0.3        2.4


      LC        NODE        Fxx        Fyy        Fxy       Fmax       Fmin      ANGLE
-------- ---- ------ ---------- ---------- ---------- ---------- ---------- ----------
RC ENV~1  Max   Cent        0.2        1.9        0.2        2.3        0.2     -66.68
                 179        0.5        2.2        0.2        2.4        0.5     -68.04
                 180        0.5        2.1        0.2        2.2        0.5     -67.69
                 183        0.1        2.1        0.2        2.2        0.0     -66.85
                 182        0.1        2.2        0.2        2.4        0.0     -67.21
           Min   Cent       -0.8       -0.7       -1.3        0.0       -1.5     -44.40
                 179       -1.0       -1.0       -1.3       -0.1       -1.8     -51.45
                 180       -1.0       -0.8       -1.3       -0.2       -1.6     -48.48
                 183       -0.7       -0.8       -1.3        0.1       -1.3     -35.80
                 182       -0.7       -1.0       -1.3        0.1       -1.7      33.59

                NODE        Mxx        Myy        Mxy       Mmax       Mmin      ANGLE
             ---- ------ ---------- ---------- ---------- ---------- ---------- ----------
           Max   Cent        5.3       -1.3        1.7        5.3       -1.6       2.62
                 179        3.8       -0.2        1.9        4.1       -1.0      23.55
                 180        7.1       -1.2        2.0        7.1       -1.3       4.53
                 183        7.3       -1.7        1.6        7.3       -1.7       9.34
                 182        3.0       -1.3        1.5        3.5       -1.7      17.06
           Min   Cent        2.1       -4.9       -1.5        2.4       -5.0     -13.51
                 179        1.3       -4.1       -1.3        1.6       -4.4      -1.67
                 180        3.9       -4.0       -1.6        4.2       -4.1     -12.35
                 183        2.4       -6.0       -1.8        2.8       -6.0     -13.89
                 182        0.6       -5.8       -1.5        1.0       -5.8     -14.61

                NODE        Vxx        Vyy
             ---- ------ ---------- ----------
           Max   Cent       -3.8        5.1
                 179       -4.4        5.2
                 180       -4.4        5.0
                 183       -3.1        5.0
                 182       -3.1        5.2
           Min   Cent       -7.1       -0.1
                 179       -6.2       -0.2
                 180       -6.2        0.0
                 183       -8.0        0.0
                 182       -8.0       -0.2


      LC        NODE        Fxx        Fyy        Fxy       Fmax       Fmin      ANGLE
-------- ---- ------ ---------- ---------- ---------- ---------- ---------- ----------
RC ENV~2  Max   Cent       -0.0        1.2        0.1        1.6       -0.1     -66.93
```

		179	-0.0	1.3	0.1	1.7	-0.1	-68.20
		180	-0.0	1.2	0.1	1.6	-0.0	-67.91
		183	-0.0	1.2	0.1	1.6	-0.1	-67.10
		182	-0.0	1.3	0.1	1.7	-0.1	-67.40
	Min	Cent	-0.6	0.1	-0.9	0.2	-0.9	69.92
		179	-0.6	-0.0	-0.9	0.1	-0.9	41.65
		180	-0.6	0.3	-0.9	0.3	-1.0	78.03
		183	-0.5	0.3	-0.9	0.3	-0.9	79.05
		182	-0.5	-0.0	-0.9	0.0	-0.9	48.34

	NODE	Mxx	Myy	Mxy	Mmax	Mmin	ANGLE
Max	Cent	4.0	-2.5	0.6	4.0	-2.5	2.79
	179	2.9	-1.6	0.8	3.0	-1.7	9.88
	180	5.4	-2.1	0.9	5.5	-2.1	4.54
	183	5.5	-3.3	0.4	5.5	-3.3	0.72
	182	2.3	-3.0	0.3	2.3	-3.0	0.77
Min	Cent	2.5	-3.6	-0.9	2.6	-3.6	-6.74
	179	1.6	-2.9	-0.7	1.7	-3.1	-6.70
	180	4.0	-2.9	-0.9	4.1	-2.9	-6.05
	183	3.3	-4.4	-1.1	3.4	-4.4	-6.88
	182	1.1	-4.2	-0.9	1.2	-4.2	-7.78

	NODE	Vxx	Vyy
Max	Cent	-4.1	3.7
	179	-4.1	3.8
	180	-4.1	3.6
	183	-4.0	3.6
	182	-4.0	3.8
Min	Cent	-5.5	1.6
	179	-5.0	1.5
	180	-5.0	1.7
	183	-6.1	1.7
	182	-6.1	1.5

ELEM	MAT	SEC	LC		NODE	Fxx	Fyy	Fxy	Fmax	Fmin	ANGLE
142	1	1	SX	(RS)	Cent	0.1	2.3	0.1	2.3	0.1	87.25
					181	0.1	3.2	0.1	3.2	0.1	88.03
					182	0.1	1.5	0.1	1.5	0.1	85.58
					185	0.1	1.5	0.1	1.5	0.1	85.48
					184	0.1	3.2	0.1	3.2	0.1	88.01

	NODE	Mxx	Myy	Mxy	Mmax	Mmin	ANGLE
	Cent	0.5	1.6	1.4	2.5	-0.4	56.66
	181	0.3	2.6	1.3	3.2	-0.3	65.37
	182	0.8	1.5	1.3	2.5	-0.2	52.79
	185	0.8	1.4	1.3	2.5	-0.3	52.22
	184	0.3	2.0	1.3	2.7	-0.4	61.04

	NODE	Vxx	Vyy
	Cent	1.2	2.4
	181	1.2	5.2
	182	1.2	0.5
	185	1.2	0.5
	184	1.2	5.2

LC		NODE	Fxx	Fyy	Fxy	Fmax	Fmin	ANGLE
SY	(RS)	Cent	0.0	1.3	0.1	1.3	0.0	87.05
		181	0.1	1.4	0.1	1.4	0.1	87.18
		182	0.1	1.2	0.1	1.2	0.1	86.49
		185	0.1	1.2	0.1	1.2	0.1	86.53
		184	0.1	1.4	0.1	1.4	0.1	87.21

	NODE	Mxx	Myy	Mxy	Mmax	Mmin	ANGLE
	Cent	0.0	1.8	0.3	1.9	-0.0	81.21
	181	0.0	1.5	0.3	1.6	-0.0	80.40
	182	0.1	1.4	0.3	1.4	0.1	77.76
	185	0.2	2.3	0.3	2.4	0.1	82.69
	184	0.0	2.1	0.3	2.1	-0.0	82.82

	NODE	Vxx	Vyy

		Cent	0.1	1.6
		181	0.2	1.2
		182	0.2	2.1
		185	0.2	2.1
		184	0.2	1.2

LC		NODE	Fxx	Fyy	Fxy	Fmax	Fmin	ANGLE
RC ENV~1	Max	Cent	0.1	3.4	0.1	3.4	0.1	-88.54
		181	0.1	4.4	0.1	4.5	0.1	-88.85
		182	0.1	2.4	0.1	2.4	0.1	-87.88
		185	0.1	2.4	0.1	2.4	0.1	-88.00
		184	0.1	4.4	0.1	4.5	0.1	-88.89
	Min	Cent	-0.1	-1.4	-0.1	-0.1	-1.4	-6.77
		181	-0.1	-2.1	-0.1	-0.1	-2.1	-4.17
		182	-0.1	-0.7	-0.1	-0.1	-0.7	-14.18
		185	-0.2	-0.7	-0.1	-0.2	-0.7	-16.47
		184	-0.2	-2.1	-0.1	-0.2	-2.1	-4.36

		NODE	Mxx	Myy	Mxy	Mmax	Mmin	ANGLE
	Max	Cent	1.2	-1.1	1.1	1.6	-1.1	20.82
		181	0.5	-0.1	1.2	1.4	-1.0	37.52
		182	2.3	-1.5	1.1	2.5	-1.7	15.23
		185	2.1	-0.6	1.0	2.3	-0.6	14.45
		184	0.4	-0.9	1.0	0.9	-0.9	27.85
	Min	Cent	0.3	-5.6	-1.6	0.6	-5.7	-5.08
		181	-0.1	-5.5	-1.5	0.2	-5.7	0.37
		182	0.7	-5.8	-1.5	1.1	-5.9	-14.89
		185	0.6	-5.7	-1.7	1.1	-5.7	-17.11
		184	-0.2	-6.2	-1.6	-0.0	-6.3	-5.24

		NODE	Vxx	Vyy
	Max	Cent	-1.1	2.5
		181	-1.2	5.7
		182	-1.2	1.7
		185	-1.0	1.7
		184	-1.0	5.7
	Min	Cent	-3.6	-2.3
		181	-3.8	-4.6
		182	-3.8	-2.4
		185	-3.4	-2.4
		184	-3.4	-4.6

LC		NODE	Fxx	Fyy	Fxy	Fmax	Fmin	ANGLE
RC ENV~2	Max	Cent	0.0	2.4	-0.0	2.4	0.0	-88.49
		181	0.1	3.1	-0.0	3.1	0.1	-88.81
		182	0.1	1.7	-0.0	1.7	0.1	-87.83
		185	-0.0	1.7	-0.0	1.7	-0.0	-87.96
		184	-0.0	3.1	-0.0	3.1	-0.0	-88.85
	Min	Cent	-0.1	-0.4	-0.1	-0.1	-0.4	-6.89
		181	-0.0	-0.8	-0.1	-0.0	-0.8	-2.88
		182	-0.0	0.0	-0.1	0.1	-0.1	-70.79
		185	-0.1	0.0	-0.1	0.1	-0.1	-75.32
		184	-0.1	-0.8	-0.1	-0.1	-0.8	-8.90

		NODE	Mxx	Myy	Mxy	Mmax	Mmin	ANGLE
	Max	Cent	0.9	-2.9	-0.0	1.0	-2.9	-8.08
		181	0.3	-2.4	0.1	0.5	-2.4	-13.02
		182	1.7	-3.0	0.1	1.8	-3.0	-1.94
		185	1.5	-2.9	-0.1	1.6	-2.9	-8.29
		184	0.2	-2.9	-0.1	0.2	-3.0	-1.44
	Min	Cent	0.5	-4.1	-0.9	0.5	-4.1	-4.53
		181	0.1	-4.0	-0.8	0.1	-4.0	0.56
		182	0.9	-4.2	-0.9	1.0	-4.3	-7.40
		185	0.9	-4.1	-0.9	0.9	-4.2	-4.96
		184	-0.1	-4.5	-0.9	0.0	-4.6	-8.74

		NODE	Vxx	Vyy
	Max	Cent	-1.5	1.0
		181	-1.6	2.7
		182	-1.6	0.3

		185	-1.5	0.3	
		184	-1.5	2.7	
	Min	Cent	-2.7	-0.0	
		181	-2.9	0.1	
		182	-2.9	-1.0	
		185	-2.6	-1.0	
		184	-2.6	0.1	

ELEM	MAT	SEC	LC		NODE	Fxx	Fyy	Fxy	Fmax	Fmin	ANGLE
143	1	1	SX (RS)		Cent	0.1	1.1	0.4	1.2	0.0	71.55
					182	0.2	1.4	0.4	1.5	0.1	74.56
					183	0.2	0.8	0.4	0.9	0.1	62.69
					186	0.1	0.8	0.4	0.9	-0.1	66.29
					185	0.1	1.4	0.4	1.5	0.0	76.00

	NODE	Mxx	Myy	Mxy	Mmax	Mmin	ANGLE
	Cent	1.7	1.3	1.5	3.0	-0.0	40.83
	182	1.2	1.6	1.5	2.9	-0.1	48.79
	183	2.3	1.1	1.5	3.3	0.1	33.61
	186	2.1	0.9	1.5	3.1	-0.1	33.44
	185	1.2	1.5	1.5	2.9	-0.2	48.29

	NODE	Vxx	Vyy
	Cent	2.1	0.3
	182	2.3	0.5
	183	2.3	0.5
	186	2.0	0.5
	185	2.0	0.5

LC		NODE	Fxx	Fyy	Fxy	Fmax	Fmin	ANGLE
SY (RS)		Cent	0.0	1.0	0.3	1.2	-0.1	72.62
		182	0.3	1.2	0.3	1.3	0.2	70.16
		183	0.3	0.9	0.3	1.1	0.2	65.83
		186	0.3	0.9	0.3	1.1	0.1	66.33
		185	0.3	1.2	0.3	1.3	0.2	70.52

	NODE	Mxx	Myy	Mxy	Mmax	Mmin	ANGLE
	Cent	0.1	1.8	0.3	1.9	0.1	81.72
	182	0.1	1.4	0.3	1.4	0.1	77.85
	183	0.2	1.4	0.2	1.4	0.2	79.28
	186	0.3	2.3	0.2	2.3	0.3	83.12
	185	0.2	2.3	0.3	2.4	0.2	82.35

	NODE	Vxx	Vyy
	Cent	0.1	1.9
	182	0.3	2.1
	183	0.3	1.8
	186	0.2	1.8
	185	0.2	2.1

LC		NODE	Fxx	Fyy	Fxy	Fmax	Fmin	ANGLE
RC ENV~1	Max	Cent	0.0	2.1	0.2	2.2	-0.0	-79.23
		182	0.1	2.3	0.2	2.4	0.1	-81.87
		183	0.1	1.8	0.2	1.9	0.1	-78.87
		186	0.2	1.8	0.2	2.0	0.2	-77.60
		185	0.2	2.3	0.2	2.4	0.2	-81.15
	Min	Cent	-0.5	-0.3	-0.6	0.3	-0.9	-44.23
		182	-0.6	-0.7	-0.6	0.0	-1.1	-39.58
		183	-0.6	-0.2	-0.6	0.2	-0.9	-53.19
		186	-0.4	-0.2	-0.6	0.3	-0.9	-50.67
		185	-0.4	-0.7	-0.6	0.2	-1.0	-46.05

	NODE	Mxx	Myy	Mxy	Mmax	Mmin	ANGLE
	Max	Cent	4.9	-1.1	1.0	5.0	-1.1	8.84
		182	3.0	-1.4	1.2	3.3	-1.6	14.65
		183	7.4	-1.6	1.0	7.5	-1.6	-3.30
		186	6.5	-0.6	0.8	6.6	-0.6	5.61
		185	2.8	-0.5	1.0	3.0	-0.5	13.45

Min	Cent	1.4	-5.6	-1.9	2.0	-5.6	-17.38
	182	0.6	-5.7	-1.8	1.2	-5.9	-17.22
	183	2.4	-5.4	-1.9	3.0	-5.5	-15.09
	186	2.2	-5.8	-2.1	2.9	-5.8	-17.87
	185	0.4	-5.6	-2.0	1.2	-5.6	-20.12

	NODE	Vxx	Vyy
Max	Cent	-3.0	1.6
	182	-3.1	1.7
	183	-3.1	1.6
	186	-3.0	1.6
	185	-3.0	1.7
Min	Cent	-7.4	-2.2
	182	-8.0	-2.4
	183	-8.0	-2.1
	186	-6.9	-2.1
	185	-6.9	-2.4

LC		NODE	Fxx	Fyy	Fxy	Fmax	Fmin	ANGLE
RC ENV~2	Max	Cent	-0.0	1.5	-0.2	1.6	-0.1	-79.22
		182	-0.0	1.7	-0.2	1.7	-0.1	-81.72
		183	-0.0	1.3	-0.2	1.4	-0.1	-78.89
		186	0.0	1.3	-0.2	1.4	-0.0	-77.66
		185	0.0	1.7	-0.2	1.7	-0.1	-81.00
	Min	Cent	-0.4	0.3	-0.4	0.3	-0.4	-64.41
		182	-0.5	0.1	-0.4	0.2	-0.5	-52.21
		183	-0.5	0.5	-0.4	0.5	-0.5	-72.94
		186	-0.3	0.5	-0.4	0.5	-0.3	-71.76
		185	-0.3	0.1	-0.4	0.2	-0.3	-48.80

	NODE	Mxx	Myy	Mxy	Mmax	Mmin	ANGLE
Max	Cent	3.7	-2.9	-0.2	3.7	-2.9	-4.18
	182	2.3	-2.9	0.0	2.3	-2.9	-2.62
	183	5.6	-2.9	-0.2	5.7	-2.9	-3.02
	186	4.8	-2.9	-0.5	4.9	-2.9	-5.39
	185	2.0	-2.8	-0.3	2.1	-2.9	-10.13
Min	Cent	2.1	-4.1	-1.2	2.2	-4.1	-8.91
	182	1.1	-4.2	-1.1	1.2	-4.3	-9.02
	183	3.4	-3.9	-1.2	3.5	-4.0	-7.67
	186	3.0	-4.2	-1.4	3.2	-4.2	-8.89
	185	0.9	-4.1	-1.2	1.1	-4.1	-6.51

	NODE	Vxx	Vyy
Max	Cent	-3.8	0.3
	182	-4.0	0.3
	183	-4.0	0.4
	186	-3.7	0.4
	185	-3.7	0.3
Min	Cent	-5.7	-0.7
	182	-6.1	-1.0
	183	-6.1	-0.5
	186	-5.3	-0.5
	185	-5.3	-1.0

ELEM	MAT	SEC	LC		NODE	Fxx	Fyy	Fxy	Fmax	Fmin	ANGLE
144	1	1	SX (RS)		Cent	0.2	1.9	0.4	2.0	0.1	76.57
					184	0.1	2.6	0.4	2.7	-0.0	80.82
					185	0.1	1.2	0.4	1.3	-0.1	71.24
					188	0.5	1.2	0.4	1.4	0.3	64.62
					187	0.5	2.6	0.4	2.7	0.4	79.21

	NODE	Mxx	Myy	Mxy	Mmax	Mmin	ANGLE
	Cent	0.4	1.2	1.4	2.2	-0.7	53.35
	184	0.3	2.5	1.4	3.2	-0.3	64.49
	185	0.8	1.4	1.4	2.5	-0.3	51.47
	188	0.6	1.0	1.3	2.1	-0.6	49.59
	187	0.4	1.6	1.3	2.4	-0.5	57.62

	NODE	Vxx	Vyy
	Cent	1.1	3.3

	184	1.2	6.4	
	185	1.2	0.8	
	188	1.0	0.8	
	187	1.0	6.4	

LC		NODE	Fxx	Fyy	Fxy	Fmax	Fmin	ANGLE
SY (RS)		Cent	0.2	1.5	0.1	1.5	0.2	84.69
		184	0.0	1.4	0.1	1.4	0.0	85.13
		185	0.0	1.5	0.1	1.5	0.0	85.62
		188	0.4	1.5	0.1	1.6	0.4	84.18
		187	0.4	1.4	0.1	1.4	0.4	83.31

		NODE	Mxx	Myy	Mxy	Mmax	Mmin	ANGLE
		Cent	0.1	2.7	0.4	2.8	0.1	82.17
		184	0.1	2.6	0.3	2.6	0.1	83.35
		185	0.2	2.2	0.4	2.3	0.1	80.35
		188	0.2	3.2	0.4	3.2	0.2	82.17
		187	0.0	2.9	0.3	3.0	0.0	83.27

		NODE	Vxx	Vyy
		Cent	0.3	1.3
		184	0.2	0.7
		185	0.2	1.9
		188	0.4	1.9
		187	0.4	0.7

LC		NODE	Fxx	Fyy	Fxy	Fmax	Fmin	ANGLE
RC ENV~1	Max	Cent	0.2	3.3	0.5	3.4	0.1	84.67
		184	0.0	4.0	0.5	4.0	-0.0	85.27
		185	0.0	2.8	0.5	2.8	-0.0	85.30
		188	0.4	2.8	0.5	2.8	0.3	85.57
		187	0.4	4.0	0.5	4.0	0.4	85.61
	Min	Cent	-0.3	-0.9	-0.4	-0.2	-1.1	-19.34
		184	-0.1	-1.6	-0.4	-0.0	-1.7	-13.52
		185	-0.1	-0.5	-0.4	-0.0	-0.6	-9.82
		188	-0.5	-0.5	-0.4	-0.4	-0.8	-30.31
		187	-0.5	-1.6	-0.4	-0.4	-1.8	-17.57

		NODE	Mxx	Myy	Mxy	Mmax	Mmin	ANGLE
	Max	Cent	1.1	0.5	0.8	1.5	0.4	-17.26
		184	0.6	0.4	0.9	1.3	0.2	40.59
		185	2.1	-0.7	0.8	2.3	-0.7	12.11
		188	2.0	1.6	0.6	2.5	1.3	-18.06
		187	0.4	0.8	0.7	0.9	-0.0	-73.78
	Min	Cent	0.4	-4.9	-2.0	0.7	-5.1	-8.46
		184	-0.1	-5.1	-1.8	0.2	-5.4	-3.20
		185	0.6	-5.6	-1.9	1.1	-5.7	-6.34
		188	0.8	-4.8	-2.0	1.3	-5.0	-10.21
		187	-0.3	-5.0	-1.9	0.1	-5.2	-10.28

		NODE	Vxx	Vyy
	Max	Cent	-1.2	1.8
		184	-1.0	6.0
		185	-1.0	-0.5
		188	-1.3	-0.5
		187	-1.3	6.0
	Min	Cent	-3.4	-4.7
		184	-3.4	-6.7
		185	-3.4	-4.4
		188	-3.4	-4.4
		187	-3.4	-6.7

LC		NODE	Fxx	Fyy	Fxy	Fmax	Fmin	ANGLE
RC ENV~2	Max	Cent	0.1	2.4	0.2	2.4	0.0	84.85
		184	-0.0	2.8	0.2	2.8	-0.0	85.41
		185	-0.0	2.0	0.2	2.0	-0.0	85.47
		188	0.2	2.0	0.2	2.0	0.1	85.72
		187	0.2	2.8	0.2	2.8	0.1	85.72
	Min	Cent	-0.2	-0.2	-0.2	0.2	-0.3	-27.26

184	-0.1	-0.6	-0.2	0.0	-0.7	-15.79
185	-0.1	0.3	-0.2	0.3	-0.1	-66.05
188	-0.3	0.3	-0.2	0.4	-0.3	-50.69
187	-0.3	-0.6	-0.2	0.2	-0.6	-24.40

	NODE	Mxx	Myy	Mxy	Mmax	Mmin	ANGLE
Max	Cent	0.9	-2.2	-0.3	1.1	-2.3	-16.32
	184	0.3	-2.0	-0.2	0.7	-2.3	-20.15
	185	1.5	-2.8	-0.3	1.7	-2.9	-11.62
	188	1.6	-1.6	-0.4	1.8	-1.7	-17.16
	187	0.1	-2.1	-0.4	0.3	-2.2	-18.55
Min	Cent	0.5	-3.3	-1.2	0.6	-3.4	-8.36
	184	0.1	-3.7	-1.1	0.2	-3.7	-3.42
	185	0.8	-4.1	-1.2	1.0	-4.1	-6.16
	188	1.0	-2.6	-1.3	1.1	-2.7	-10.08
	187	-0.1	-3.3	-1.2	0.1	-3.6	-10.65

	NODE	Vxx	Vyy
Max	Cent	-1.5	-0.5
	184	-1.5	1.8
	185	-1.5	-2.4
	188	-1.5	-2.4
	187	-1.5	1.8
Min	Cent	-2.6	-2.3
	184	-2.6	-1.9
	185	-2.6	-3.1
	188	-2.6	-3.1
	187	-2.6	-1.9

ELEM	MAT	SEC	LC	NODE	Fxx	Fyy	Fxy	Fmax	Fmin	ANGLE
145	1	1	SX (RS)	Cent	0.2	0.9	0.8	1.5	-0.4	56.85
				185	0.1	1.2	0.8	1.6	-0.3	60.87
				186	0.1	0.7	0.8	1.3	-0.5	54.84
				189	0.3	0.7	0.8	1.4	-0.4	52.63
				188	0.3	1.2	0.8	1.7	-0.2	59.05

	NODE	Mxx	Myy	Mxy	Mmax	Mmin	ANGLE
	Cent	1.3	0.9	1.7	2.8	-0.6	41.83
	185	1.2	1.5	1.5	2.9	-0.2	47.84
	186	2.1	0.9	1.8	3.4	-0.3	35.45
	189	1.1	0.3	1.9	2.6	-1.2	39.12
	188	0.8	1.0	1.7	2.6	-0.7	46.72

	NODE	Vxx	Vyy
	Cent	1.3	0.8
	185	2.0	0.8
	186	2.0	1.0
	189	0.7	1.0
	188	0.7	0.8

LC	NODE	Fxx	Fyy	Fxy	Fmax	Fmin	ANGLE
SY (RS)	Cent	0.4	1.5	0.3	1.6	0.3	77.37
	185	0.1	1.5	0.3	1.6	0.1	79.29
	186	0.1	1.6	0.3	1.6	0.1	79.71
	189	0.7	1.6	0.3	1.6	0.6	74.57
	188	0.7	1.5	0.3	1.6	0.6	73.65

	NODE	Mxx	Myy	Mxy	Mmax	Mmin	ANGLE
	Cent	0.5	2.6	0.4	2.7	0.4	80.88
	185	0.2	2.2	0.4	2.3	0.1	80.10
	186	0.3	2.1	0.3	2.2	0.2	81.77
	189	0.7	3.0	0.4	3.1	0.7	81.18
	188	0.6	3.3	0.5	3.3	0.5	80.38

	NODE	Vxx	Vyy
	Cent	0.3	1.8
	185	0.2	1.9
	186	0.2	1.6
	189	0.3	1.6

		188	0.3	1.9

LC		NODE	Fxx	Fyy	Fxy	Fmax	Fmin	ANGLE
RC ENV~1	Max	Cent	0.3	2.6	0.7	2.6	0.3	89.75
		185	0.1	2.7	0.7	2.7	0.1	89.76
		186	0.1	2.5	0.7	2.5	0.1	86.44
		189	0.5	2.5	0.7	2.5	0.5	85.64
		188	0.5	2.7	0.7	2.7	0.5	89.77
	Min	Cent	-0.5	-0.6	-1.0	-0.2	-1.1	-42.99
		185	-0.3	-0.5	-1.0	0.0	-1.2	-34.00
		186	-0.3	-0.6	-1.0	0.0	-1.0	-31.23
		189	-0.8	-0.6	-1.0	-0.3	-1.1	-52.71
		188	-0.8	-0.5	-1.0	-0.3	-1.3	-55.73

		NODE	Mxx	Myy	Mxy	Mmax	Mmin	ANGLE
	Max	Cent	4.4	0.5	0.8	4.7	0.4	-13.98
		185	2.8	-0.6	0.8	2.9	-0.6	11.02
		186	6.5	-0.6	1.0	6.6	-0.6	6.54
		189	6.1	1.6	0.9	6.5	1.5	-14.14
		188	2.4	1.7	0.8	3.1	1.5	-20.77
	Min	Cent	1.7	-4.8	-2.5	2.8	-5.0	-9.08
		185	0.4	-5.5	-2.3	1.3	-5.7	-8.14
		186	2.2	-5.4	-2.5	3.2	-5.5	-20.46
		189	3.5	-4.4	-2.9	4.0	-4.6	-8.91
		188	0.7	-4.8	-2.6	1.2	-5.1	-12.57

		NODE	Vxx	Vyy
	Max	Cent	-3.9	-0.7
		185	-3.0	-0.5
		186	-3.0	-0.8
		189	-4.7	-0.8
		188	-4.7	-0.5
	Min	Cent	-6.8	-4.2
		185	-6.9	-4.4
		186	-6.9	-4.0
		189	-6.7	-4.0
		188	-6.7	-4.4

LC		NODE	Fxx	Fyy	Fxy	Fmax	Fmin	ANGLE
RC ENV~2	Max	Cent	0.0	1.8	0.2	1.8	-0.1	-89.87
		185	0.0	2.0	0.2	2.0	-0.1	-89.87
		186	0.0	1.7	0.2	1.7	-0.1	-89.86
		189	0.0	1.7	0.2	1.7	-0.1	-89.87
		188	0.0	2.0	0.2	2.0	-0.1	-89.88
	Min	Cent	-0.3	0.4	-0.5	0.7	-0.3	-56.09
		185	-0.2	0.3	-0.5	0.6	-0.3	-51.71
		186	-0.2	0.6	-0.5	0.8	-0.2	-67.00
		189	-0.4	0.6	-0.5	0.8	-0.4	-67.56
		188	-0.4	0.3	-0.5	0.6	-0.4	-51.85

		NODE	Mxx	Myy	Mxy	Mmax	Mmin	ANGLE
	Max	Cent	3.4	-2.1	-0.5	3.6	-2.2	-13.15
		185	2.0	-2.8	-0.4	2.2	-2.9	-12.86
		186	4.9	-2.7	-0.5	5.0	-2.8	-9.63
		189	4.7	-1.4	-0.6	5.0	-1.5	-13.30
		188	1.9	-1.5	-0.6	2.3	-1.8	-19.87
	Min	Cent	2.1	-3.2	-1.6	2.4	-3.4	-11.35
		185	0.9	-4.0	-1.4	1.1	-4.2	-7.87
		186	3.1	-3.9	-1.6	3.2	-4.0	-8.60
		189	3.5	-2.7	-1.8	3.8	-2.8	-10.22
		188	1.0	-2.6	-1.6	1.3	-2.8	-11.61

		NODE	Vxx	Vyy
	Max	Cent	-4.1	-2.4
		185	-3.7	-2.4
		186	-3.7	-2.2
		189	-4.4	-2.2
		188	-4.4	-2.4
	Min	Cent	-5.3	-2.8
		185	-5.3	-3.1
		186	-5.3	-2.7

					189	-5.5	-2.7				
					188	-5.5	-3.1				

ELEM	MAT	SEC	LC		NODE	Fxx	Fyy	Fxy	Fmax	Fmin	ANGLE
146	1	1	SX	(RS)	Cent	0.0	0.8	1.3	1.7	-0.9	53.54
					187	0.7	0.4	1.3	1.8	-0.7	41.50
					188	0.7	1.6	1.3	2.5	-0.2	54.89
					191	0.7	1.6	1.3	2.5	-0.2	54.42
					190	0.7	0.4	1.3	1.8	-0.7	40.98

		NODE	Mxx	Myy	Mxy	Mmax	Mmin	ANGLE
		Cent	0.3	0.7	1.1	1.7	-0.6	49.79
		187	0.1	1.3	1.1	1.9	-0.5	59.27
		188	0.6	1.1	1.2	2.1	-0.4	51.21
		191	1.4	2.1	1.2	3.0	0.5	52.97
		190	0.3	2.3	1.1	2.8	-0.1	66.72

		NODE	Vxx	Vyy
		Cent	0.8	5.6
		187	1.0	6.5
		188	1.0	5.1
		191	2.0	5.1
		190	2.0	6.5

LC		NODE	Fxx	Fyy	Fxy	Fmax	Fmin	ANGLE
SY	(RS)	Cent	0.1	1.4	0.5	1.5	-0.1	72.77
		187	0.4	0.8	0.5	1.1	0.1	57.28
		188	0.4	2.2	0.5	2.3	0.3	76.72
		191	0.5	2.2	0.5	2.3	0.4	76.12
		190	0.5	0.8	0.5	1.1	0.2	54.83

		NODE	Mxx	Myy	Mxy	Mmax	Mmin	ANGLE
		Cent	0.3	3.3	0.4	3.4	0.2	83.31
		187	0.1	3.5	0.4	3.5	0.0	82.58
		188	0.2	3.2	0.4	3.2	0.2	83.16
		191	1.0	4.0	0.2	4.1	1.0	85.78
		190	0.2	2.6	0.3	2.7	0.2	83.16

		NODE	Vxx	Vyy
		Cent	1.0	0.2
		187	0.4	1.6
		188	0.4	1.6
		191	1.6	1.6
		190	1.6	1.6

LC		NODE	Fxx	Fyy	Fxy	Fmax	Fmin	ANGLE
RC ENV~1	Max	Cent	0.1	2.6	1.3	2.9	0.1	70.77
		187	0.6	2.1	1.3	2.3	0.1	50.83
		188	0.6	3.3	1.3	3.5	0.2	76.31
		191	0.9	3.3	1.3	3.6	0.5	70.99
		190	0.9	2.1	1.3	2.4	0.4	60.20
	Min	Cent	-0.0	-0.4	-1.2	0.2	-1.1	-30.60
		187	-0.7	-0.0	-1.2	0.2	-1.5	-59.62
		188	-0.7	-1.1	-1.2	-0.3	-1.8	-24.09
		191	-0.6	-1.1	-1.2	-0.2	-1.7	-22.45
		190	-0.6	-0.0	-1.2	0.2	-1.4	-57.14

		NODE	Mxx	Myy	Mxy	Mmax	Mmin	ANGLE
	Max	Cent	1.0	2.8	0.2	3.0	0.8	-75.11
		187	0.5	2.7	0.4	2.8	0.4	-83.96
		188	2.0	1.6	0.3	2.6	1.0	-20.51
		191	2.8	4.7	0.2	4.9	2.6	-72.93
		190	0.1	2.3	0.3	2.4	0.1	-78.58
	Min	Cent	0.3	-3.8	-2.0	0.8	-4.2	-15.35
		187	0.2	-4.2	-1.8	0.5	-4.5	-13.78
		188	0.8	-4.8	-2.2	1.4	-5.1	-11.80
		191	-0.1	-3.4	-2.3	0.8	-3.8	-16.89
		190	-0.6	-2.9	-1.8	-0.0	-3.7	-20.67

	NODE	Vxx	Vyy
Max	Cent	-1.4	2.9
	187	-1.3	5.4
	188	-1.3	0.7
	191	-0.5	0.7
	190	-0.5	5.4
Min	Cent	-3.4	-8.3
	187	-3.4	-7.5
	188	-3.4	-9.5
	191	-4.6	-9.5
	190	-4.6	-7.5

LC		NODE	Fxx	Fyy	Fxy	Fmax	Fmin	ANGLE
RC ENV~2	Max	Cent	0.1	1.9	0.7	2.0	0.1	71.52
		187	0.3	1.5	0.7	1.6	0.1	76.46
		188	0.3	2.3	0.7	2.4	0.1	76.80
		191	0.5	2.3	0.7	2.5	0.3	71.78
		190	0.5	1.5	0.7	1.7	0.2	61.36
	Min	Cent	0.0	0.3	-0.6	0.7	-0.4	-62.58
		187	-0.4	0.5	-0.6	0.7	-0.6	-86.14
		188	-0.4	0.1	-0.6	0.7	-0.5	-54.25
		191	-0.3	0.1	-0.6	0.5	-0.7	-53.72
		190	-0.3	0.5	-0.6	0.7	-0.6	-85.92

	NODE	Mxx	Myy	Mxy	Mmax	Mmin	ANGLE
Max	Cent	0.7	-0.4	-0.7	1.4	-0.9	-30.21
	187	0.4	-0.7	-0.5	1.1	-1.1	-32.37
	188	1.6	-1.6	-0.8	2.0	-1.9	-19.86
	191	1.7	1.3	-0.9	2.5	0.5	-41.14
	190	-0.2	-0.1	-0.7	0.6	-0.9	-45.02
Min	Cent	0.5	-1.3	-1.5	1.0	-2.0	-20.44
	187	0.3	-1.7	-1.2	0.4	-1.9	-13.98
	188	0.9	-2.7	-1.5	1.2	-3.0	-13.23
	191	0.9	-0.4	-1.6	1.9	-1.3	-31.74
	190	-0.4	-1.4	-1.3	0.4	-2.3	-35.42

	NODE	Vxx	Vyy
Max	Cent	-2.0	-1.2
	187	-1.5	1.0
	188	-1.5	-3.3
	191	-1.9	-3.3
	190	-1.9	1.0
Min	Cent	-2.5	-4.7
	187	-2.6	-3.1
	188	-2.6	-6.5
	191	-3.0	-6.5
	190	-3.0	-3.1

ELEM	MAT	SEC	LC		NODE	Fxx	Fyy	Fxy	Fmax	Fmin	ANGLE
147	1	1	SX (RS)		Cent	1.4	1.0	1.4	2.6	-0.2	40.96
					188	0.3	1.3	1.4	2.3	-0.7	55.43
					189	0.3	0.7	1.4	1.9	-0.9	49.25
					192	2.5	0.7	1.4	3.2	-0.1	28.28
					191	2.5	1.3	1.4	3.4	0.4	33.40

	NODE	Mxx	Myy	Mxy	Mmax	Mmin	ANGLE
	Cent	1.7	0.4	1.7	2.9	-0.7	34.42
	188	0.9	1.2	2.0	3.1	-1.0	47.19
	189	1.1	0.4	1.3	2.1	-0.6	36.89
	192	6.9	0.8	1.1	7.1	0.6	10.08
	191	2.0	2.2	1.9	4.0	0.2	46.89

	NODE	Vxx	Vyy
	Cent	7.6	3.3
	188	0.7	5.1
	189	0.7	1.6
	192	14.8	1.6
	191	14.8	5.1

LC		NODE	Fxx	Fyy	Fxy	Fmax	Fmin	ANGLE
SY (RS)		Cent	0.8	2.6	0.1	2.6	0.8	85.43
		188	0.4	2.1	0.1	2.1	0.4	84.95
		189	0.4	3.2	0.1	3.2	0.4	86.98
		192	1.2	3.2	0.1	3.2	1.2	85.86
		191	1.2	2.1	0.1	2.1	1.2	80.93

		NODE	Mxx	Myy	Mxy	Mmax	Mmin	ANGLE
		Cent	0.7	3.6	0.6	3.7	0.6	79.23
		188	0.6	3.3	0.5	3.3	0.6	80.34
		189	0.7	2.7	0.6	2.8	0.5	75.10
		192	2.0	4.9	0.6	5.0	1.9	78.60
		191	0.6	3.7	0.5	3.8	0.5	81.47

		NODE	Vxx	Vyy
		Cent	2.3	2.7
		188	0.3	1.6
		189	0.3	3.8
		192	4.3	3.8
		191	4.3	1.6

LC		NODE	Fxx	Fyy	Fxy	Fmax	Fmin	ANGLE
RC ENV~1	Max	Cent	1.3	3.8	1.4	3.9	0.7	87.30
		188	0.3	3.1	1.4	3.2	0.3	75.94
		189	0.3	4.6	1.4	4.6	0.3	88.03
		192	2.5	4.6	1.4	4.6	1.1	87.56
		191	2.5	3.1	1.4	3.8	1.1	44.09
	Min	Cent	-1.4	-1.4	-1.4	-0.8	-2.2	-14.90
		188	-0.5	-1.0	-1.4	-0.5	-1.7	-15.83
		189	-0.5	-1.8	-1.4	-0.5	-1.8	-6.59
		192	-2.5	-1.8	-1.4	-1.2	-3.0	-13.71
		191	-2.5	-1.0	-1.4	-0.9	-3.2	-62.95

		NODE	Mxx	Myy	Mxy	Mmax	Mmin	ANGLE
	Max	Cent	5.1	3.3	0.5	5.9	2.9	-20.20
		188	2.5	1.7	0.9	3.4	1.2	-23.83
		189	6.1	1.2	0.2	6.4	1.2	-13.31
		192	12.1	5.7	-0.2	12.1	5.4	-1.01
		191	3.9	4.5	0.6	4.8	2.7	-70.29
	Min	Cent	1.6	-4.0	-2.9	3.1	-4.4	-14.25
		188	0.7	-4.8	-3.1	1.3	-5.2	-14.30
		189	3.5	-4.1	-2.5	4.2	-4.4	-11.36
		192	-1.7	-4.0	-2.7	1.8	-4.5	-55.06
		191	-0.0	-3.0	-3.2	2.0	-4.0	-19.83

		NODE	Vxx	Vyy
	Max	Cent	2.0	-1.0
		188	-4.7	0.7
		189	-4.7	-0.4
		192	8.9	-0.4
		191	8.9	0.7
	Min	Cent	-13.3	-7.7
		188	-6.7	-9.5
		189	-6.7	-8.0
		192	-20.6	-8.0
		191	-20.6	-9.5

LC		NODE	Fxx	Fyy	Fxy	Fmax	Fmin	ANGLE
RC ENV~2	Max	Cent	0.6	2.3	0.6	2.4	0.2	82.71
		188	0.1	2.2	0.6	2.3	-0.1	76.69
		189	0.1	2.5	0.6	2.6	-0.1	82.60
		192	1.2	2.5	0.6	2.6	0.6	83.57
		191	1.2	2.2	0.6	2.3	0.5	79.84
	Min	Cent	-0.7	0.6	-0.7	1.1	-0.8	-55.87
		188	-0.3	0.2	-0.7	0.8	-0.5	-59.12
		189	-0.3	0.9	-0.7	1.2	-0.4	-69.76
		192	-1.1	0.9	-0.7	1.3	-1.2	-83.76
		191	-1.1	0.2	-0.7	0.9	-1.2	-80.33

	NODE	Mxx	Myy	Mxy	Mmax	Mmin	ANGLE
Max	Cent	3.9	-0.3	-0.9	4.4	-0.6	-19.61
	188	1.9	-1.6	-0.7	2.5	-1.9	-23.06
	189	4.7	-1.4	-0.9	5.0	-1.6	-12.66
	192	7.3	0.9	-1.1	7.7	0.5	-12.09
	191	2.6	1.4	-0.9	3.0	0.8	-24.38
Min	Cent	2.2	-1.3	-1.9	2.6	-1.8	-16.05
	188	1.0	-2.7	-1.9	1.2	-3.1	-11.67
	189	3.5	-2.7	-1.7	3.9	-2.9	-12.62
	192	1.9	0.0	-1.9	2.7	-0.7	-27.35
	191	1.4	-0.3	-2.1	2.8	-1.6	-33.02

	NODE	Vxx	Vyy
Max	Cent	-2.2	-3.7
	188	-4.4	-3.3
	189	-4.4	-4.1
	192	0.3	-4.1
	191	0.3	-3.3
Min	Cent	-7.7	-5.7
	188	-5.5	-6.5
	189	-5.5	-5.0
	192	-10.2	-5.0
	191	-10.2	-6.5

ELEM	MAT	SEC	LC	NODE	Fxx	Fyy	Fxy	Fmax	Fmin	ANGLE
148	1	1	SX (RS)	Cent	0.7	1.3	0.8	1.9	0.2	54.56
				190	0.3	1.7	0.8	2.1	-0.1	65.09
				191	0.3	0.9	0.8	1.5	-0.2	54.99
				31	1.1	0.9	0.8	1.8	0.2	40.73
				20	1.1	1.7	0.8	2.3	0.6	54.15

	NODE	Mxx	Myy	Mxy	Mmax	Mmin	ANGLE
	Cent	0.8	2.4	0.7	2.7	0.5	69.24
	190	0.2	1.5	0.9	1.9	-0.3	63.17
	191	1.1	0.8	0.8	1.8	0.2	39.63
	31	1.9	4.0	0.6	4.2	1.7	75.34
	20	0.2	3.5	0.7	3.7	0.1	78.56

	NODE	Vxx	Vyy
	Cent	2.8	5.2
	190	2.0	4.2
	191	2.0	6.6
	31	3.5	6.6
	20	3.5	4.2

LC	NODE	Fxx	Fyy	Fxy	Fmax	Fmin	ANGLE
SY (RS)	Cent	0.1	0.6	0.1	0.7	0.1	78.13
	190	0.3	1.3	0.1	1.3	0.3	82.66
	191	0.3	0.5	0.1	0.6	0.3	65.04
	31	0.2	0.5	0.1	0.6	0.1	73.42
	20	0.2	1.3	0.1	1.3	0.2	83.74

	NODE	Mxx	Myy	Mxy	Mmax	Mmin	ANGLE
	Cent	0.1	1.8	0.2	1.8	0.0	83.28
	190	0.2	2.6	0.4	2.7	0.1	80.92
	191	1.0	4.0	0.4	4.0	0.9	82.60
	31	0.9	2.7	0.6	2.9	0.8	73.52
	20	0.4	3.1	0.5	3.2	0.3	79.30

	NODE	Vxx	Vyy
	Cent	0.7	5.7
	190	1.6	0.8
	191	1.6	12.0
	31	0.2	12.0
	20	0.2	0.8

LC	NODE	Fxx	Fyy	Fxy	Fmax	Fmin	ANGLE

```
RC ENV~1  Max   Cent        0.7        2.0        0.8        2.4        0.3      64.49
                 190        0.4        2.8        0.8        3.0        0.4      72.61
                 191        0.4        1.3        0.8        1.8        0.4      59.74
                  31        1.0        1.3        0.8        2.0        0.3      50.09
                  20        1.0        2.8        0.8        3.1        0.7      68.26
          Min   Cent       -0.8       -0.6       -0.8        0.1       -1.5     -64.59
                 190       -0.3       -0.6       -0.8       -0.1       -1.3     -49.38
                 191       -0.3       -0.5       -0.8       -0.1       -1.2     -58.49
                  31       -1.3       -0.5       -0.8       -0.1       -1.8     -61.89
                  20       -1.3       -0.6       -0.8       -0.1       -1.8     -53.72

                 NODE        Mxx        Myy        Mxy       Mmax       Mmin      ANGLE
          ---- ------ ---------- ---------- ---------- ---------- ---------- ----------
          Max   Cent        1.3        4.0        0.1        4.0        1.3      88.32
                 190        0.2        3.6        0.2        3.6        0.2     -84.90
                 191        2.6        5.2       -0.2        5.3        2.3     -78.93
                  31        3.1        7.4        0.1        7.4        3.1      88.84
                  20       -0.1        4.2        0.4        4.3       -0.1      84.45
          Min   Cent       -0.2       -0.8       -1.5        0.9       -1.9     -38.82
                 190       -0.2       -1.7       -1.6        0.4       -2.3     -28.00
                 191        0.3       -2.8       -2.0        1.0       -3.3     -19.85
                  31       -0.7       -0.6       -1.3        0.4       -1.8     -46.35
                  20       -0.9       -2.8       -0.9       -0.5       -3.2     -22.57

                 NODE        Vxx        Vyy
          ---- ------ ---------- ----------
          Max   Cent        0.5        3.6
                 190       -0.5        4.4
                 191       -0.5        7.7
                  31        1.5        7.7
                  20        1.5        4.4
          Min   Cent       -5.0       -7.7
                 190       -4.6       -3.9
                 191       -4.6      -16.4
                  31       -5.5      -16.4
                  20       -5.5       -3.9


       LC        NODE        Fxx        Fyy        Fxy       Fmax       Fmin      ANGLE
-------- ---- ------ ---------- ---------- ---------- ---------- ---------- ----------
RC ENV~2  Max   Cent        0.3        1.5        0.4        1.5        0.1     -82.13
                 190        0.3        2.0        0.4        2.1        0.2     -83.25
                 191        0.3        0.9        0.4        1.0        0.1     -69.75
                  31        0.4        0.9        0.4        1.0       -0.0     -76.52
                  20        0.4        2.0        0.4        2.0        0.1     -84.68
          Min   Cent       -0.4        0.4       -0.4        0.6       -0.5      67.30
                 190       -0.1        0.6       -0.4        0.8       -0.2      58.32
                 191       -0.1        0.1       -0.4        0.4       -0.3      72.79
                  31       -0.7        0.1       -0.4        0.4       -0.8      78.30
                  20       -0.7        0.6       -0.4        0.9       -0.8      54.02

                 NODE        Mxx        Myy        Mxy       Mmax       Mmin      ANGLE
          ---- ------ ---------- ---------- ---------- ---------- ---------- ----------
          Max   Cent        0.7        2.2       -0.6        2.5        0.5     -68.73
                 190        0.1        1.5       -0.6        1.9       -0.2     -66.37
                 191        1.7        1.2       -0.9        2.4        0.5     -37.35
                  31        1.7        4.9       -0.5        5.0        1.6     -82.10
                  20       -0.5        1.5       -0.1        1.6       -0.5     -83.32
          Min   Cent        0.3        0.8       -1.1        1.5       -0.5     -52.14
                 190       -0.0        0.2       -1.2        1.0       -0.9     -51.21
                 191        1.1        0.7       -1.4        2.3       -0.5     -40.09
                  31        0.5        2.3       -0.9        2.6        0.3     -70.20
                  20       -0.6       -0.5       -0.6       -0.0       -1.1     -53.99

                 NODE        Vxx        Vyy
          ---- ------ ---------- ----------
          Max   Cent       -1.4       -0.8
                 190       -1.9        1.7
                 191       -1.9       -3.1
                  31       -0.8       -3.1
                  20       -0.8        1.7
          Min   Cent       -3.0       -4.3
                 190       -3.0       -1.0
                 191       -3.0       -7.6
                  31       -3.0       -7.6
                  20       -3.0       -1.0


  ELEM   MAT    SEC        LC        NODE        Fxx        Fyy        Fxy       Fmax       Fmin      ANGLE
```

```
------ ------ ------ -------- ---- ------ ---------- ---------- ---------- ---------- ---------- ----------
   149      1      1       SX (RS)   Cent        3.3        0.9        3.7        6.0       -1.9      36.15
                                     191        2.5        0.4        3.7        5.3       -2.4      37.11
                                     192        2.5        2.1        3.7        6.1       -1.4      43.55
                                      14        9.0        2.1        3.7       10.7        0.5      23.69
                                      31        9.0        0.4        3.7       10.4       -1.0      20.48

                                    NODE        Mxx        Myy        Mxy       Mmax       Mmin      ANGLE
                                ---- ------ ---------- ---------- ---------- ---------- ---------- ----------
                                    Cent        5.8        3.1        2.6        7.4        1.5      31.12
                                     191        1.7        0.9        0.7        2.1        0.5      30.01
                                     192        6.9        1.1        6.7       11.3       -3.3      33.12
                                      14       26.8        8.6        6.6       28.9        6.5      17.97
                                      31        1.8        4.0        0.7        4.2        1.6      74.40

                                    NODE        Vxx        Vyy
                                ---- ------ ---------- ----------
                                    Cent       14.5        6.0
                                     191       14.8        6.6
                                     192       14.8        5.7
                                      14       43.7        5.7
                                      31       43.7        6.6


                          LC        NODE        Fxx        Fyy        Fxy       Fmax       Fmin      ANGLE
                       -------- ---- ------ ---------- ---------- ---------- ---------- ---------- ----------
                          SY (RS)   Cent        0.1        4.5        2.0        5.3       -0.6      68.61
                                     191        0.8        0.6        2.0        2.7       -1.3      43.35
                                     192        0.8        9.2        2.0        9.7        0.4      77.29
                                      14        0.8        9.2        2.0        9.7        0.3      77.34
                                      31        0.8        0.6        2.0        2.7       -1.3      43.62

                                    NODE        Mxx        Myy        Mxy       Mmax       Mmin      ANGLE
                                ---- ------ ---------- ---------- ---------- ---------- ---------- ----------
                                    Cent        1.0        6.5        1.2        6.7        0.7      78.58
                                     191        0.6        3.7        0.8        3.9        0.4      76.60
                                     192        2.1        5.4        0.9        5.7        1.9      75.22
                                      14        3.1       19.6        3.5       20.3        2.4      78.34
                                      31        0.6        2.6        3.8        5.5       -2.3      52.45

                                    NODE        Vxx        Vyy
                                ---- ------ ---------- ----------
                                    Cent        1.5        7.5
                                     191        4.3       12.0
                                     192        4.3       27.0
                                      14        3.2       27.0
                                      31        3.2       12.0


                          LC        NODE        Fxx        Fyy        Fxy       Fmax       Fmin      ANGLE
                       -------- ---- ------ ---------- ---------- ---------- ---------- ---------- ----------
                       RC ENV~1  Max   Cent        2.9        6.2        4.1        7.0       -0.3      71.80
                                     191        2.6        0.9        4.1        5.9        0.3      38.67
                                     192        2.6       12.4        4.1       12.9        1.1      78.87
                                      14        8.3       12.4        4.1       12.9        2.5      79.53
                                      31        8.3        0.9        4.1       10.1       -0.7      23.62
                                 Min   Cent       -3.6       -2.7       -3.4        0.4       -5.4     -27.76
                                     191       -2.4       -0.2       -3.4        0.6       -4.8      57.08
                                     192       -2.4       -6.1       -3.4       -0.3       -6.5     -15.84
                                      14       -9.7       -6.1       -3.4       -0.9      -10.7     -17.79
                                      31       -9.7       -0.2       -3.4        0.5      -10.8      85.91

                                    NODE        Mxx        Myy        Mxy       Mmax       Mmin      ANGLE
                                ---- ------ ---------- ---------- ---------- ---------- ---------- ----------
                                 Max   Cent        9.8        8.9        0.8       10.0        5.3      10.20
                                     191        3.7        5.0       -0.8        5.2        2.4     -73.54
                                     192       11.9        5.4        5.2       14.0        5.2      21.84
                                      14       36.5       25.0        4.8       37.5       13.1      11.61
                                      31        1.0        7.0        1.9        7.4        0.8     -67.80
                                 Min   Cent       -1.8       -4.1       -4.5        3.3       -5.7     -48.82
                                     191        0.4       -2.4       -3.0        2.6       -3.5     -25.35
                                     192       -2.0       -5.5       -8.1        2.1       -9.7      24.07
                                      14      -17.0      -14.1       -8.3        0.8      -20.9     -64.85
                                      31       -2.5       -1.0       -5.6        0.9       -6.2     -53.39

                                    NODE        Vxx        Vyy
                                ---- ------ ---------- ----------
                                 Max   Cent        2.5        1.0
                                     191        8.9        7.7
```

		192	8.9	18.2	
		14	25.5	18.2	
		31	25.5	7.7	
	Min	Cent	-26.5	-14.0	
		191	-20.6	-16.4	
		192	-20.6	-35.7	
		14	-61.8	-35.7	
		31	-61.8	-16.4	

LC		NODE	Fxx	Fyy	Fxy	Fmax	Fmin	ANGLE
RC ENV~2	Max	Cent	1.1	3.2	2.2	4.3	-0.2	57.16
		191	1.3	0.6	2.2	2.5	0.3	-37.35
		192	1.3	5.9	2.2	6.3	0.8	76.85
		14	3.1	5.9	2.2	6.7	1.7	60.40
		31	3.1	0.6	2.2	4.2	-0.5	27.58
	Min	Cent	-1.9	1.0	-1.6	1.6	-2.5	-72.12
		191	-1.0	0.3	-1.6	0.4	-2.6	-87.41
		192	-1.0	1.6	-1.6	2.6	-1.7	-61.03
		14	-5.1	1.6	-1.6	1.9	-5.4	-77.30
		31	-5.1	0.3	-1.6	0.4	-5.5	-89.91

		NODE	Mxx	Myy	Mxy	Mmax	Mmin	ANGLE
	Max	Cent	5.8	3.3	-1.1	6.3	2.8	-23.85
		191	2.7	1.3	-1.5	3.8	0.2	-33.61
		192	7.1	-0.1	0.8	8.6	-0.3	-22.86
		14	19.2	8.2	0.4	19.3	8.2	2.04
		31	-0.4	4.5	-1.9	5.5	-1.2	-67.89
	Min	Cent	2.2	1.4	-2.9	4.8	-1.1	-40.89
		191	1.6	0.8	-2.1	3.0	-0.8	-39.38
		192	1.8	-1.4	-3.8	1.9	-2.2	14.39
		14	1.9	3.0	-4.2	6.6	-1.7	-48.93
		31	-1.6	1.9	-2.5	2.9	-2.6	-64.78

		NODE	Vxx	Vyy
	Max	Cent	-8.0	-5.7
		191	0.3	-3.1
		192	0.3	-8.4
		14	-5.8	-8.4
		31	-5.8	-3.1
	Min	Cent	-16.9	-9.3
		191	-10.2	-7.6
		192	-10.2	-10.9
		14	-34.1	-10.9
		31	-34.1	-7.6

ELEM	MAT	SEC	LC		NODE	Fxx	Fyy	Fxy	Fmax	Fmin	ANGLE
150	1	1	SX (RS)		Cent	0.7	1.3	0.8	1.9	0.2	54.71
					50	1.2	0.9	0.8	1.9	0.2	40.92
					21	1.2	1.7	0.8	2.3	0.6	54.29
					195	0.3	1.7	0.8	2.1	-0.1	65.18
					194	0.3	0.9	0.8	1.5	-0.2	55.16

		NODE	Mxx	Myy	Mxy	Mmax	Mmin	ANGLE
		Cent	0.8	2.4	0.7	2.7	0.5	69.35
		50	1.9	4.0	0.6	4.2	1.7	75.44
		21	0.2	3.5	0.7	3.7	0.1	78.67
		195	0.2	1.5	0.9	1.9	-0.3	63.28
		194	1.1	0.8	0.8	1.8	0.2	39.69

		NODE	Vxx	Vyy
		Cent	2.8	5.2
		50	3.5	6.6
		21	3.5	4.2
		195	2.0	4.2
		194	2.0	6.6

LC		NODE	Fxx	Fyy	Fxy	Fmax	Fmin	ANGLE
SY (RS)		Cent	0.1	0.7	0.1	0.7	0.1	77.98
		50	0.2	0.5	0.1	0.6	0.1	72.78

		21	0.2	1.3	0.1	1.3	0.2	83.63
		195	0.3	1.3	0.1	1.3	0.3	82.55
		194	0.3	0.5	0.1	0.6	0.3	64.25

	NODE	Mxx	Myy	Mxy	Mmax	Mmin	ANGLE
	Cent	0.1	1.8	0.2	1.8	0.0	83.28
	50	0.9	2.7	0.6	2.9	0.8	73.52
	21	0.4	3.1	0.5	3.2	0.3	79.30
	195	0.2	2.6	0.4	2.7	0.1	80.92
	194	1.0	4.0	0.4	4.0	0.9	82.61

	NODE	Vxx	Vyy
	Cent	0.7	5.7
	50	0.2	12.1
	21	0.2	0.8
	195	1.6	0.8
	194	1.6	12.1

LC		NODE	Fxx	Fyy	Fxy	Fmax	Fmin	ANGLE
RC ENV~1	Max	Cent	0.7	2.1	0.8	2.5	0.3	65.20
		50	1.0	1.4	0.8	2.0	0.4	51.07
		21	1.0	2.9	0.8	3.2	0.7	69.11
		195	0.4	2.9	0.8	3.1	0.4	73.05
		194	0.4	1.4	0.8	1.8	0.4	60.14
	Min	Cent	-0.8	-0.5	-0.8	0.2	-1.4	-49.55
		50	-1.3	-0.5	-0.8	-0.0	-1.8	-66.74
		21	-1.3	-0.5	-0.8	-0.1	-1.8	-63.96
		195	-0.2	-0.5	-0.8	-0.1	-1.2	-58.82
		194	-0.2	-0.5	-0.8	-0.0	-1.2	-62.35

	NODE	Mxx	Myy	Mxy	Mmax	Mmin	ANGLE
Max	Cent	1.5	6.0	0.7	6.1	1.5	84.54
	50	3.5	9.4	0.7	9.5	3.4	83.83
	21	0.0	6.3	1.1	6.4	-0.1	81.04
	195	0.1	5.2	0.7	5.2	0.1	87.33
	194	3.3	7.4	0.4	7.4	3.3	89.41
Min	Cent	-0.0	1.0	-0.7	1.4	-0.4	-62.67
	50	-0.3	1.2	-0.4	1.3	-0.4	-74.13
	21	-0.7	-0.8	-0.4	-0.3	-1.1	-35.26
	195	-0.3	-0.1	-1.0	0.4	-0.9	-49.13
	194	0.7	-0.6	-1.1	1.2	-0.9	-22.87

	NODE	Vxx	Vyy
Max	Cent	5.7	7.7
	50	6.2	15.6
	21	6.2	4.8
	195	5.7	4.8
	194	5.7	15.6
Min	Cent	0.1	-3.7
	50	-0.9	-8.5
	21	-0.9	-3.7
	195	1.1	-3.7
	194	1.1	-8.5

LC		NODE	Fxx	Fyy	Fxy	Fmax	Fmin	ANGLE
RC ENV~2	Max	Cent	0.3	1.5	0.3	1.5	0.1	-83.93
		50	0.3	0.9	0.3	0.9	-0.0	-78.49
		21	0.3	2.0	0.3	2.1	0.1	-85.94
		195	0.2	2.0	0.3	2.1	0.2	-84.90
		194	0.2	0.9	0.3	1.0	0.1	-72.52
	Min	Cent	-0.3	0.3	-0.3	0.5	-0.4	62.00
		50	-0.6	0.1	-0.3	0.4	-0.7	47.06
		21	-0.6	0.5	-0.3	0.7	-0.7	70.99
		195	-0.1	0.5	-0.3	0.7	-0.1	70.97
		194	-0.1	0.1	-0.3	0.4	-0.2	47.00

	NODE	Mxx	Myy	Mxy	Mmax	Mmin	ANGLE
Max	Cent	1.1	4.5	0.3	4.5	1.1	85.23
	50	2.4	7.0	0.5	7.0	2.4	84.21
	21	-0.3	4.3	0.8	4.4	-0.3	81.96

		195	-0.1	3.0	0.2	3.0	-0.1	87.56
		194	2.4	3.7	-0.1	3.8	2.4	-82.34
	Min	Cent	0.6	2.8	-0.2	2.8	0.6	-85.92
		50	1.1	4.1	0.0	4.1	1.1	89.40
		21	-0.4	1.9	0.2	1.9	-0.5	84.16
		195	-0.2	1.8	-0.3	1.8	-0.2	-82.84
		194	1.7	3.3	-0.5	3.4	1.6	-77.03

	NODE	Vxx	Vyy
Max	Cent	4.1	4.9
	50	4.1	6.6
	21	4.1	3.2
	195	4.2	3.2
	194	4.2	6.6
Min	Cent	2.3	0.9
	50	1.8	1.7
	21	1.8	0.0
	195	2.9	0.0
	194	2.9	1.7

ELEM	MAT	SEC	LC		NODE	Fxx	Fyy	Fxy	Fmax	Fmin	ANGLE
151	1	1	SX (RS)		Cent	1.4	1.0	1.4	2.6	-0.2	40.93
					193	2.5	0.7	1.4	3.2	-0.1	28.26
					194	2.5	1.3	1.4	3.4	0.4	33.29
					197	0.3	1.3	1.4	2.3	-0.7	55.40
					196	0.3	0.7	1.4	1.9	-0.9	49.31

	NODE	Mxx	Myy	Mxy	Mmax	Mmin	ANGLE
	Cent	1.7	0.4	1.7	2.9	-0.7	34.42
	193	6.9	0.8	1.1	7.1	0.6	10.00
	194	2.0	2.2	1.9	4.0	0.2	47.00
	197	0.9	1.2	2.0	3.1	-1.0	47.17
	196	1.1	0.4	1.3	2.1	-0.6	36.85

	NODE	Vxx	Vyy
	Cent	7.7	3.3
	193	14.8	1.6
	194	14.8	5.1
	197	0.7	5.1
	196	0.7	1.6

LC		NODE	Fxx	Fyy	Fxy	Fmax	Fmin	ANGLE
SY (RS)		Cent	0.8	2.6	0.2	2.6	0.8	85.11
		193	1.2	3.2	0.2	3.2	1.2	85.56
		194	1.2	2.1	0.2	2.1	1.2	80.44
		197	0.4	2.1	0.2	2.1	0.4	84.62
		196	0.4	3.2	0.2	3.2	0.4	86.75

	NODE	Mxx	Myy	Mxy	Mmax	Mmin	ANGLE
	Cent	0.7	3.6	0.6	3.7	0.6	79.23
	193	2.0	4.9	0.6	5.0	1.9	78.60
	194	0.6	3.7	0.5	3.8	0.5	81.47
	197	0.6	3.3	0.5	3.4	0.6	80.34
	196	0.7	2.7	0.6	2.8	0.5	75.10

	NODE	Vxx	Vyy
	Cent	2.3	2.7
	193	4.3	3.8
	194	4.3	1.6
	197	0.3	1.6
	196	0.3	3.8

LC		NODE	Fxx	Fyy	Fxy	Fmax	Fmin	ANGLE
RC ENV~1	Max	Cent	1.3	4.1	1.4	4.1	0.7	86.92
		193	2.4	4.8	1.4	4.8	1.1	87.22
		194	2.4	3.3	1.4	3.9	1.1	46.35
		197	0.3	3.3	1.4	3.3	0.3	86.56
		196	0.3	4.8	1.4	4.8	0.3	87.70

Min	Cent	-1.5	-1.2	-1.4	-0.8	-2.2	-22.40
	193	-2.6	-1.5	-1.4	-1.2	-3.0	-22.07
	194	-2.6	-0.8	-1.4	-0.8	-3.2	-74.22
	197	-0.6	-0.8	-1.4	-0.5	-1.6	-21.87
	196	-0.6	-1.5	-1.4	-0.5	-1.5	-7.55

	NODE	Mxx	Myy	Mxy	Mmax	Mmin	ANGLE
Max	Cent	6.9	5.8	1.4	7.0	4.7	-8.58
	193	13.4	8.0	0.8	13.4	7.9	4.85
	194	4.8	6.6	1.4	6.6	4.3	89.47
	197	3.1	4.4	1.7	4.4	2.4	84.44
	196	8.4	4.2	1.1	8.4	4.1	-0.98
Min	Cent	2.4	-1.5	-2.0	3.6	-1.6	-9.78
	193	-0.5	-1.7	-1.4	2.9	-1.9	-67.33
	194	0.4	-0.9	-2.3	2.1	-1.8	-17.31
	197	0.9	-2.1	-2.3	1.3	-2.3	-12.01
	196	4.6	-1.1	-1.4	5.1	-1.2	-19.18

	NODE	Vxx	Vyy
Max	Cent	14.8	7.4
	193	22.1	7.0
	194	22.1	8.2
	197	9.6	8.2
	196	9.6	7.0
Min	Cent	-0.5	-0.4
	193	-7.6	-1.0
	194	-7.6	-2.1
	197	6.4	-2.1
	196	6.4	-1.0

LC		NODE	Fxx	Fyy	Fxy	Fmax	Fmin	ANGLE
RC ENV~2	Max	Cent	0.5	2.3	0.6	2.4	0.2	82.82
		193	0.9	2.5	0.6	2.6	0.6	83.71
		194	0.9	2.2	0.6	2.2	0.4	82.91
		197	-0.0	2.2	0.6	2.2	-0.1	81.65
		196	-0.0	2.5	0.6	2.6	-0.1	82.74
	Min	Cent	-0.6	0.8	-0.5	1.0	-0.7	-66.97
		193	-1.0	1.1	-0.5	1.3	-1.1	-65.52
		194	-1.0	0.5	-0.5	0.9	-1.1	-48.12
		197	-0.2	0.5	-0.5	0.8	-0.4	-68.28
		196	-0.2	1.1	-0.5	1.2	-0.3	-75.59

	NODE	Mxx	Myy	Mxy	Mmax	Mmin	ANGLE
Max	Cent	5.1	2.2	0.4	5.2	2.2	-8.67
	193	9.4	3.3	0.3	9.4	3.2	-3.37
	194	3.5	3.7	0.3	3.8	3.3	53.14
	197	2.3	1.2	0.6	2.6	1.1	-26.16
	196	6.3	1.6	0.6	6.3	1.6	-1.11
Min	Cent	3.7	1.3	-0.8	3.7	1.3	8.42
	193	4.5	2.5	-0.6	4.5	2.5	-0.13
	194	2.1	2.0	-1.1	3.1	1.0	-51.50
	197	1.6	0.0	-0.8	1.8	-0.1	-12.91
	196	5.5	0.0	-0.4	5.6	0.0	3.05

	NODE	Vxx	Vyy
Max	Cent	9.9	5.3
	193	12.6	4.9
	194	12.6	5.6
	197	7.4	5.6
	196	7.4	4.9
Min	Cent	4.7	2.8
	193	2.4	2.8
	194	2.4	2.4
	197	6.9	2.4
	196	6.9	2.8

ELEM	MAT	SEC	LC		NODE	Fxx	Fyy	Fxy	Fmax	Fmin	ANGLE
152	1	1	SX (RS)		Cent	0.0	0.8	1.3	1.7	-0.9	53.33
					194	0.7	1.6	1.3	2.5	-0.2	54.30
					195	0.7	0.4	1.3	1.8	-0.7	40.73
					198	0.7	0.4	1.3	1.8	-0.7	41.28

		197	0.7	1.6	1.3	2.5	-0.2	54.80

	NODE	Mxx	Myy	Mxy	Mmax	Mmin	ANGLE
	Cent	0.4	0.7	1.1	1.7	-0.6	49.92
	194	1.4	2.1	1.2	3.0	0.5	53.10
	195	0.3	2.4	1.1	2.8	-0.1	66.83
	198	0.1	1.3	1.1	1.9	-0.5	59.24
	197	0.6	1.1	1.2	2.1	-0.4	51.20

	NODE	Vxx	Vyy
	Cent	0.8	5.6
	194	2.0	5.1
	195	2.0	6.5
	198	1.0	6.5
	197	1.0	5.1

LC		NODE	Fxx	Fyy	Fxy	Fmax	Fmin	ANGLE
SY (RS)		Cent	0.1	1.4	0.5	1.6	-0.1	72.86
		194	0.5	2.2	0.5	2.4	0.4	76.15
		195	0.5	0.8	0.5	1.1	0.2	55.03
		198	0.4	0.8	0.5	1.1	0.1	57.44
		197	0.4	2.2	0.5	2.4	0.3	76.73

	NODE	Mxx	Myy	Mxy	Mmax	Mmin	ANGLE
	Cent	0.3	3.3	0.4	3.4	0.2	83.31
	194	1.0	4.0	0.2	4.1	1.0	85.78
	195	0.2	2.6	0.3	2.7	0.2	83.16
	198	0.1	3.5	0.4	3.5	0.0	82.58
	197	0.2	3.2	0.4	3.2	0.2	83.15

	NODE	Vxx	Vyy
	Cent	1.0	0.2
	194	1.6	1.6
	195	1.6	1.6
	198	0.4	1.6
	197	0.4	1.6

LC		NODE	Fxx	Fyy	Fxy	Fmax	Fmin	ANGLE
RC ENV~1	Max	Cent	0.1	2.5	1.4	2.7	0.1	76.05
		194	0.9	3.5	1.4	3.6	0.5	79.39
		195	0.9	2.0	1.4	2.4	0.4	48.88
		198	0.6	2.0	1.4	2.3	0.1	51.69
		197	0.6	3.5	1.4	3.6	0.2	80.35
	Min	Cent	-0.0	-0.3	-1.2	0.2	-1.0	-33.63
		194	-0.6	-1.0	-1.2	-0.2	-1.6	-24.50
		195	-0.6	0.1	-1.2	0.3	-1.3	-59.75
		198	-0.8	0.1	-1.2	0.3	-1.4	-63.45
		197	-0.8	-1.0	-1.2	-0.3	-1.7	-27.81

	NODE	Mxx	Myy	Mxy	Mmax	Mmin	ANGLE
Max	Cent	1.5	5.2	0.9	5.2	1.4	88.44
	194	3.2	6.8	0.8	6.8	3.2	-87.87
	195	0.2	5.0	0.9	5.0	0.1	88.95
	198	0.3	4.8	1.0	4.8	0.3	85.64
	197	2.7	4.3	0.9	4.3	1.9	88.04
Min	Cent	0.5	-1.4	-1.4	0.7	-1.6	-15.70
	194	0.3	-1.3	-1.6	0.9	-1.5	-15.48
	195	-0.5	-0.2	-1.3	0.2	-1.5	-48.05
	198	0.1	-2.2	-1.2	0.2	-2.3	-13.07
	197	1.1	-2.1	-1.5	1.5	-2.2	-10.01

	NODE	Vxx	Vyy
Max	Cent	4.8	8.3
	194	5.7	8.2
	195	5.7	8.9
	198	4.5	8.9
	197	4.5	8.2
Min	Cent	2.0	-3.0
	194	1.1	-2.1

		195	1.1	-4.3			
		198	1.8	-4.3			
		197	1.8	-2.1			

LC		NODE	Fxx	Fyy	Fxy	Fmax	Fmin	ANGLE
RC ENV~2	Max	Cent	0.1	1.8	0.6	2.0	0.0	76.68
		194	0.5	2.3	0.6	2.4	0.3	72.01
		195	0.5	1.4	0.6	1.6	0.2	69.64
		198	0.2	1.4	0.6	1.5	0.0	76.15
		197	0.2	2.3	0.6	2.3	0.0	77.00
	Min	Cent	0.0	0.6	-0.4	0.7	-0.2	-71.01
		194	-0.2	0.4	-0.4	0.6	-0.4	-62.43
		195	-0.2	0.7	-0.4	0.8	-0.4	-73.81
		198	-0.3	0.7	-0.4	0.8	-0.6	85.55
		197	-0.3	0.4	-0.4	0.7	-0.5	-67.29

		NODE	Mxx	Myy	Mxy	Mmax	Mmin	ANGLE
	Max	Cent	1.1	2.0	0.3	2.0	1.0	85.98
		194	2.3	3.5	0.1	3.5	2.3	-89.41
		195	0.0	3.3	0.3	3.3	0.0	85.66
		198	0.2	1.3	0.4	1.4	0.2	-82.85
		197	2.0	1.1	0.3	2.2	1.0	-23.32
	Min	Cent	0.8	1.1	-0.5	1.2	0.5	-63.04
		194	1.4	1.8	-0.7	2.3	0.9	-52.59
		195	-0.2	1.7	-0.5	1.8	-0.3	-77.38
		198	0.1	-0.1	-0.3	0.3	-0.4	43.85
		197	1.6	0.0	-0.6	1.6	-0.0	4.47

		NODE	Vxx	Vyy
	Max	Cent	3.6	5.8
		194	4.2	5.6
		195	4.2	6.2
		198	3.4	6.2
		197	3.4	5.6
	Min	Cent	2.9	1.8
		194	2.9	2.4
		195	2.9	1.3
		198	2.6	1.3
		197	2.6	2.4

ELEM	MAT	SEC	LC		NODE	Fxx	Fyy	Fxy	Fmax	Fmin	ANGLE
153	1	1	SX (RS)		Cent	0.2	0.9	0.8	1.5	-0.4	56.81
					196	0.3	0.7	0.8	1.4	-0.4	52.65
					197	0.3	1.2	0.8	1.7	-0.2	58.92
					200	0.1	1.2	0.8	1.6	-0.4	60.80
					199	0.1	0.7	0.8	1.3	-0.5	54.91

		NODE	Mxx	Myy	Mxy	Mmax	Mmin	ANGLE
		Cent	1.3	0.9	1.7	2.8	-0.6	41.79
		196	1.1	0.3	1.9	2.7	-1.2	39.11
		197	0.8	1.0	1.7	2.6	-0.7	46.68
		200	1.2	1.5	1.5	2.9	-0.2	47.83
		199	2.2	0.9	1.8	3.4	-0.3	35.39

		NODE	Vxx	Vyy
		Cent	1.3	0.8
		196	0.7	1.0
		197	0.7	0.8
		200	2.0	0.8
		199	2.0	1.0

LC		NODE	Fxx	Fyy	Fxy	Fmax	Fmin	ANGLE
SY (RS)		Cent	0.4	1.6	0.3	1.6	0.3	77.99
		196	0.7	1.6	0.3	1.7	0.6	75.31
		197	0.7	1.5	0.3	1.6	0.6	74.49
		200	0.1	1.5	0.3	1.6	0.1	79.81
		199	0.1	1.6	0.3	1.6	0.1	80.19

		NODE	Mxx	Myy	Mxy	Mmax	Mmin	ANGLE

	NODE	Vxx	Vyy
	Cent	0.5	2.6
	196	0.7	3.0
	197	0.6	3.3
	200	0.2	2.2
	199	0.3	2.1

	NODE	Vxx	Vyy
	Cent	0.3	1.8
	196	0.3	1.6
	197	0.3	1.9
	200	0.2	1.9
	199	0.2	1.6

LC		NODE	Fxx	Fyy	Fxy	Fmax	Fmin	ANGLE
RC ENV~1	Max	Cent	0.3	2.7	0.7	2.7	0.3	86.52
		196	0.5	2.7	0.7	2.7	0.5	86.20
		197	0.5	2.7	0.7	2.7	0.5	86.14
		200	0.0	2.7	0.7	2.7	0.0	86.77
		199	0.0	2.7	0.7	2.7	0.0	86.82
	Min	Cent	-0.5	-0.4	-1.0	-0.1	-1.0	-50.08
		196	-0.8	-0.4	-1.0	-0.2	-1.1	-59.58
		197	-0.8	-0.4	-1.0	-0.2	-1.2	-61.81
		200	-0.2	-0.4	-1.0	0.1	-1.1	-39.72
		199	-0.2	-0.4	-1.0	0.0	-0.9	-36.82

	NODE	Mxx	Myy	Mxy	Mmax	Mmin	ANGLE
Max	Cent	5.8	3.7	1.7	5.8	3.5	-1.56
	196	8.5	4.7	1.8	8.5	4.7	-2.78
	197	3.1	4.4	1.6	4.4	2.3	79.39
	200	3.1	2.6	1.6	4.0	1.7	36.04
	199	8.5	3.0	1.8	8.5	3.0	-0.35
Min	Cent	2.4	-1.6	-1.7	3.3	-1.6	-4.61
	196	4.7	-1.3	-2.0	5.1	-1.3	-3.85
	197	0.9	-2.1	-1.7	1.2	-2.2	-9.01
	200	0.5	-2.1	-1.5	1.5	-2.3	-31.08
	199	3.4	-1.6	-1.7	4.1	-1.8	-22.77

	NODE	Vxx	Vyy
Max	Cent	9.7	3.5
	196	9.6	3.9
	197	9.6	3.3
	200	9.8	3.3
	199	9.8	3.9
Min	Cent	5.6	-0.3
	196	6.4	-0.1
	197	6.4	-0.6
	200	4.7	-0.6
	199	4.7	-0.1

LC		NODE	Fxx	Fyy	Fxy	Fmax	Fmin	ANGLE
RC ENV~2	Max	Cent	-0.1	1.9	0.2	1.9	-0.1	89.91
		196	-0.1	1.7	0.2	1.7	-0.2	89.91
		197	-0.1	2.0	0.2	2.0	-0.2	89.92
		200	-0.0	2.0	0.2	2.0	-0.1	89.91
		199	-0.0	1.7	0.2	1.7	-0.1	89.91
	Min	Cent	-0.2	0.6	-0.4	0.8	-0.3	-71.12
		196	-0.3	0.7	-0.4	0.8	-0.3	-72.46
		197	-0.3	0.5	-0.4	0.7	-0.3	-70.24
		200	-0.2	0.5	-0.4	0.7	-0.3	-69.60
		199	-0.2	0.7	-0.4	0.8	-0.2	-71.94

	NODE	Mxx	Myy	Mxy	Mmax	Mmin	ANGLE
Max	Cent	4.3	1.1	0.8	4.3	1.0	-1.62
	196	6.4	1.8	0.8	6.4	1.8	-2.71
	197	2.3	1.1	0.8	2.3	1.1	-16.63
	200	2.3	0.4	0.8	2.3	0.4	8.01
	199	6.4	0.9	0.9	6.4	0.9	-0.38
Min	Cent	3.4	-0.4	-0.4	3.4	-0.5	8.90
	196	5.6	0.4	-0.5	5.7	0.4	7.24
	197	1.6	-0.1	-0.4	1.7	-0.4	1.20

200	1.4	-1.3	-0.2	1.5	-1.4	12.43
199	4.9	-0.9	-0.3	4.9	-1.0	6.46

	NODE	Vxx	Vyy
Max	Cent	7.4	2.5
	196	7.4	2.7
	197	7.4	2.3
	200	7.4	2.3
	199	7.4	2.7
Min	Cent	6.5	1.4
	196	6.9	1.4
	197	6.9	1.3
	200	6.0	1.3
	199	6.0	1.4

ELEM	MAT	SEC	LC		NODE	Fxx	Fyy	Fxy	Fmax	Fmin	ANGLE
154	1	1	SX (RS)		Cent	0.2	1.9	0.4	2.0	0.1	76.43
					197	0.5	1.2	0.4	1.4	0.3	64.32
					198	0.5	2.6	0.4	2.7	0.4	79.08
					201	0.1	2.6	0.4	2.7	-0.0	80.73
					200	0.1	1.2	0.4	1.3	-0.1	71.05

	NODE	Mxx	Myy	Mxy	Mmax	Mmin	ANGLE
	Cent	0.4	1.2	1.4	2.2	-0.7	53.35
	197	0.6	1.0	1.3	2.1	-0.6	49.55
	198	0.4	1.6	1.3	2.4	-0.5	57.68
	201	0.3	2.5	1.4	3.2	-0.3	64.52
	200	0.8	1.4	1.4	2.5	-0.3	51.47

	NODE	Vxx	Vyy
	Cent	1.1	3.3
	197	1.0	0.8
	198	1.0	6.4
	201	1.2	6.4
	200	1.2	0.8

LC		NODE	Fxx	Fyy	Fxy	Fmax	Fmin	ANGLE
SY (RS)		Cent	0.2	1.5	0.1	1.5	0.2	84.67
		197	0.4	1.6	0.1	1.6	0.4	84.16
		198	0.4	1.4	0.1	1.4	0.4	83.31
		201	0.0	1.4	0.1	1.4	0.0	85.11
		200	0.0	1.6	0.1	1.6	0.0	85.58

	NODE	Mxx	Myy	Mxy	Mmax	Mmin	ANGLE
	Cent	0.1	2.7	0.4	2.8	0.1	82.17
	197	0.2	3.2	0.4	3.2	0.2	82.16
	198	0.0	2.9	0.3	3.0	0.0	83.27
	201	0.1	2.6	0.3	2.6	0.1	83.35
	200	0.2	2.2	0.4	2.3	0.1	80.35

	NODE	Vxx	Vyy
	Cent	0.3	1.3
	197	0.4	1.9
	198	0.4	0.7
	201	0.2	0.7
	200	0.2	1.9

LC		NODE	Fxx	Fyy	Fxy	Fmax	Fmin	ANGLE
RC ENV~1	Max	Cent	0.2	3.1	0.5	3.1	0.1	80.97
		197	0.4	2.7	0.5	2.8	0.3	86.12
		198	0.4	3.8	0.5	3.8	0.3	82.14
		201	0.0	3.8	0.5	3.8	-0.0	82.94
		200	0.0	2.7	0.5	2.7	-0.0	86.63
	Min	Cent	-0.3	-0.7	-0.4	-0.2	-0.9	-35.31
		197	-0.5	-0.4	-0.4	-0.3	-0.7	-58.76
		198	-0.5	-1.5	-0.4	-0.4	-1.6	-19.91
		201	-0.1	-1.5	-0.4	-0.0	-1.6	-19.36
		200	-0.1	-0.4	-0.4	-0.1	-0.4	-12.92

	NODE	Mxx	Myy	Mxy	Mmax	Mmin	ANGLE
Max	Cent	1.4	3.4	1.4	3.5	0.9	81.57
	197	2.7	4.3	1.3	4.3	1.8	81.60
	198	0.5	4.0	1.3	4.0	0.2	85.18
	201	0.4	2.8	1.4	3.4	0.1	64.82
	200	2.6	2.6	1.4	3.5	1.6	39.32
Min	Cent	0.5	-2.1	-1.4	0.8	-2.1	-7.29
	197	1.1	-2.1	-1.4	1.5	-2.1	-7.45
	198	-0.2	-1.9	-1.3	0.1	-1.9	-10.31
	201	-0.3	-3.2	-1.3	-0.0	-3.6	-5.62
	200	0.8	-2.1	-1.3	1.4	-2.3	-5.81

	NODE	Vxx	Vyy
Max	Cent	4.4	5.3
	197	4.5	3.3
	198	4.5	8.0
	201	4.3	8.0
	200	4.3	3.3
Min	Cent	1.6	-1.8
	197	1.8	-0.6
	198	1.8	-4.8
	201	1.4	-4.8
	200	1.4	-0.6

LC		NODE	Fxx	Fyy	Fxy	Fmax	Fmin	ANGLE
RC ENV~2	Max	Cent	0.0	2.2	0.2	2.2	-0.0	84.86
		197	0.1	2.0	0.2	2.0	0.1	85.80
		198	0.1	2.6	0.2	2.6	0.0	85.67
		201	-0.0	2.6	0.2	2.6	-0.0	85.32
		200	-0.0	2.0	0.2	2.0	-0.0	85.54
	Min	Cent	-0.1	0.2	-0.1	0.3	-0.2	-60.24
		197	-0.2	0.5	-0.1	0.6	-0.3	-73.13
		198	-0.2	-0.2	-0.1	0.2	-0.3	-21.13
		201	-0.1	-0.2	-0.1	0.0	-0.3	-36.13
		200	-0.1	0.5	-0.1	0.6	-0.1	-78.15

	NODE	Mxx	Myy	Mxy	Mmax	Mmin	ANGLE
Max	Cent	1.1	0.7	0.7	1.2	0.7	21.99
	197	2.0	1.1	0.6	2.0	1.1	6.65
	198	0.3	1.1	0.7	1.3	0.2	60.97
	201	0.2	0.3	0.8	0.3	0.1	89.44
	200	1.9	0.4	0.8	1.9	0.4	7.85
Min	Cent	0.8	-0.7	-0.2	0.8	-0.9	1.82
	197	1.5	-0.2	-0.3	1.6	-0.4	1.21
	198	0.1	0.3	-0.3	0.4	-0.1	-79.07
	201	-0.1	-2.0	-0.1	0.1	-2.3	14.68
	200	1.4	-1.3	-0.2	1.4	-1.4	12.04

	NODE	Vxx	Vyy
Max	Cent	3.3	3.6
	197	3.4	2.3
	198	3.4	5.3
	201	3.2	5.3
	200	3.2	2.3
Min	Cent	2.5	1.3
	197	2.6	1.3
	198	2.6	0.8
	201	2.3	0.8
	200	2.3	1.3

ELEM	MAT	SEC	LC		NODE	Fxx	Fyy	Fxy	Fmax	Fmin	ANGLE
155	1	1	SX	(RS)	Cent	0.1	1.1	0.4	1.2	0.0	71.57
					199	0.1	0.8	0.4	0.9	-0.1	66.38
					200	0.1	1.4	0.4	1.5	0.0	76.02
					203	0.2	1.4	0.4	1.5	0.1	74.54
					202	0.2	0.8	0.4	0.9	0.1	62.69

	NODE	Mxx	Myy	Mxy	Mmax	Mmin	ANGLE
	Cent	1.7	1.3	1.5	3.0	-0.0	40.77

199	2.1	0.9	1.5	3.1	-0.1	33.34
200	1.2	1.5	1.5	2.9	-0.2	48.27
203	1.2	1.6	1.5	2.9	-0.1	48.79
202	2.3	1.1	1.5	3.3	0.1	33.53

NODE	Vxx	Vyy
Cent	2.1	0.3
199	2.0	0.5
200	2.0	0.5
203	2.3	0.5
202	2.3	0.5

LC		NODE	Fxx	Fyy	Fxy	Fmax	Fmin	ANGLE
SY (RS)		Cent	0.0	1.1	0.3	1.2	-0.1	73.18
		199	0.3	1.0	0.3	1.1	0.2	66.97
		200	0.3	1.2	0.3	1.3	0.2	71.20
		203	0.3	1.2	0.3	1.3	0.2	70.85
		202	0.3	1.0	0.3	1.1	0.2	66.48

	NODE	Mxx	Myy	Mxy	Mmax	Mmin	ANGLE
	Cent	0.1	1.8	0.3	1.9	0.1	81.72
	199	0.3	2.3	0.2	2.3	0.3	83.12
	200	0.2	2.3	0.3	2.4	0.2	82.35
	203	0.1	1.4	0.3	1.4	0.1	77.85
	202	0.2	1.4	0.2	1.4	0.2	79.27

NODE	Vxx	Vyy
Cent	0.1	1.9
199	0.2	1.8
200	0.2	2.1
203	0.3	2.1
202	0.3	1.8

LC		NODE	Fxx	Fyy	Fxy	Fmax	Fmin	ANGLE
RC ENV~1	Max	Cent	-0.0	2.1	0.2	2.2	-0.1	-80.16
		199	0.2	1.9	0.2	2.0	0.2	-78.87
		200	0.2	2.4	0.2	2.4	0.2	86.35
		203	0.1	2.4	0.2	2.4	0.1	86.23
		202	0.1	1.9	0.2	2.0	0.1	-79.84
	Min	Cent	-0.4	-0.1	-0.6	0.4	-0.8	-49.20
		199	-0.4	-0.0	-0.6	0.3	-0.8	-55.15
		200	-0.4	-0.5	-0.6	0.2	-0.9	-38.77
		203	-0.6	-0.5	-0.6	0.1	-1.0	-44.58
		202	-0.6	-0.0	-0.6	0.3	-0.9	-57.37

	NODE	Mxx	Myy	Mxy	Mmax	Mmin	ANGLE
Max	Cent	6.0	2.5	1.6	6.1	2.4	21.18
	199	8.5	3.2	1.5	8.5	3.1	1.13
	200	3.0	2.6	1.7	4.1	1.7	36.26
	203	3.4	2.0	1.7	4.3	1.4	36.88
	202	9.3	2.4	1.6	9.3	2.3	2.95
Min	Cent	2.0	-2.1	-1.4	2.6	-2.3	-22.81
	199	3.4	-1.6	-1.5	3.9	-1.7	-20.44
	200	0.5	-2.6	-1.4	1.3	-2.8	-28.95
	203	0.6	-2.4	-1.3	1.3	-2.7	-27.38
	202	3.6	-1.9	-1.3	4.0	-2.0	-17.96

	NODE	Vxx	Vyy
Max	Cent	10.2	1.8
	199	9.8	1.7
	200	9.8	1.8
	203	10.7	1.8
	202	10.7	1.7
Min	Cent	4.8	-2.1
	199	4.7	-1.9
	200	4.7	-2.3
	203	4.9	-2.3
	202	4.9	-1.9

LC		NODE	Fxx	Fyy	Fxy	Fmax	Fmin	ANGLE
RC ENV~2	Max	Cent	-0.1	1.5	-0.2	1.6	-0.2	-80.23
		199	-0.1	1.4	-0.2	1.5	-0.2	-79.02
		200	-0.1	1.7	-0.2	1.7	-0.2	-80.50
		203	-0.2	1.7	-0.2	1.7	-0.2	-81.20
		202	-0.2	1.4	-0.2	1.4	-0.2	-79.94
	Min	Cent	-0.3	0.4	-0.3	0.5	-0.4	-71.19
		199	-0.2	0.6	-0.3	0.6	-0.3	-73.92
		200	-0.2	0.3	-0.3	0.4	-0.3	-64.71
		203	-0.4	0.3	-0.3	0.4	-0.4	-68.05
		202	-0.4	0.6	-0.3	0.6	-0.5	-75.66

	NODE	Mxx	Myy	Mxy	Mmax	Mmin	ANGLE
Max	Cent	4.5	0.7	1.0	4.5	0.7	3.69
	199	6.4	0.9	0.8	6.4	0.9	0.98
	200	2.2	0.3	1.0	2.3	0.3	11.24
	203	2.5	0.5	1.1	2.7	0.5	14.95
	202	7.0	1.0	0.9	7.0	1.0	2.75
Min	Cent	3.2	-1.3	0.0	3.3	-1.4	7.20
	199	4.9	-0.9	-0.2	4.9	-1.0	4.81
	200	1.4	-1.6	-0.0	1.5	-1.8	13.20
	203	1.5	-1.5	0.2	1.6	-1.7	12.38
	202	5.2	-1.1	0.0	5.2	-1.1	4.38

	NODE	Vxx	Vyy
Max	Cent	7.7	0.5
	199	7.4	0.7
	200	7.4	0.3
	203	8.1	0.3
	202	8.1	0.7
Min	Cent	6.2	-0.6
	199	6.0	-0.3
	200	6.0	-0.8
	203	6.4	-0.8
	202	6.4	-0.3

ELEM	MAT	SEC	LC		NODE	Fxx	Fyy	Fxy	Fmax	Fmin	ANGLE
156	1	1	SX (RS)		Cent	0.1	2.3	0.1	2.3	0.1	87.23
					200	0.1	1.5	0.1	1.5	0.1	85.44
					201	0.1	3.2	0.1	3.2	0.1	88.00
					204	0.1	3.2	0.1	3.2	0.1	88.02
					203	0.1	1.5	0.1	1.5	0.1	85.54

	NODE	Mxx	Myy	Mxy	Mmax	Mmin	ANGLE
	Cent	0.5	1.6	1.4	2.5	-0.4	56.70
	200	0.8	1.4	1.3	2.5	-0.3	52.22
	201	0.3	2.0	1.3	2.7	-0.4	61.08
	204	0.3	2.6	1.3	3.2	-0.3	65.43
	203	0.8	1.5	1.3	2.5	-0.2	52.82

	NODE	Vxx	Vyy
	Cent	1.2	2.4
	200	1.2	0.5
	201	1.2	5.2
	204	1.3	5.2
	203	1.3	0.5

LC		NODE	Fxx	Fyy	Fxy	Fmax	Fmin	ANGLE
SY (RS)		Cent	0.0	1.3	0.1	1.3	0.0	87.16
		200	0.1	1.2	0.1	1.2	0.1	86.66
		201	0.1	1.5	0.1	1.5	0.1	87.32
		204	0.1	1.5	0.1	1.5	0.1	87.29
		203	0.1	1.2	0.1	1.2	0.1	86.62

	NODE	Mxx	Myy	Mxy	Mmax	Mmin	ANGLE
	Cent	0.0	1.8	0.3	1.9	-0.0	81.21
	200	0.2	2.3	0.3	2.4	0.1	82.69
	201	0.0	2.1	0.3	2.1	-0.0	82.82
	204	0.0	1.5	0.3	1.6	-0.0	80.40

		203	0.1	1.4	0.3	1.4	0.1	77.75

	NODE	Vxx	Vyy
	Cent	0.1	1.6
	200	0.2	2.1
	201	0.2	1.2
	204	0.2	1.2
	203	0.2	2.1

LC		NODE	Fxx	Fyy	Fxy	Fmax	Fmin	ANGLE
RC ENV~1	Max	Cent	0.1	3.4	0.1	3.4	0.1	88.91
		200	0.1	2.5	0.1	2.5	0.1	88.48
		201	0.1	4.4	0.1	4.4	0.1	89.17
		204	0.1	4.4	0.1	4.4	0.1	89.16
		203	0.1	2.5	0.1	2.5	0.1	88.46
	Min	Cent	-0.2	-1.2	-0.1	-0.1	-1.2	-8.05
		200	-0.2	-0.5	-0.1	-0.1	-0.5	-24.21
		201	-0.2	-1.9	-0.1	-0.2	-1.9	-4.89
		204	-0.1	-1.9	-0.1	-0.1	-1.9	-4.65
		203	-0.1	-0.5	-0.1	-0.1	-0.5	-19.95

	NODE	Mxx	Myy	Mxy	Mmax	Mmin	ANGLE
Max	Cent	1.4	2.1	1.6	3.2	0.7	50.61
	200	2.5	2.6	1.5	3.5	1.5	39.22
	201	0.4	2.5	1.5	3.2	0.0	61.83
	204	0.4	2.6	1.6	3.4	-0.1	62.92
	203	2.8	1.9	1.5	3.7	1.2	40.13
Min	Cent	0.4	-2.6	-1.1	0.8	-2.9	-1.61
	200	0.8	-2.6	-1.2	1.3	-2.8	-24.98
	201	-0.2	-1.7	-1.1	0.1	-2.2	-2.91
	204	-0.3	-4.0	-1.0	0.0	-4.4	0.18
	203	0.9	-2.5	-1.1	1.3	-2.8	-23.44

	NODE	Vxx	Vyy
Max	Cent	4.5	2.6
	200	4.3	1.8
	201	4.3	5.9
	204	4.6	5.9
	203	4.6	1.8
Min	Cent	1.5	-2.1
	200	1.4	-2.3
	201	1.4	-4.5
	204	1.5	-4.5
	203	1.5	-2.3

LC		NODE	Fxx	Fyy	Fxy	Fmax	Fmin	ANGLE
RC ENV~2	Max	Cent	0.0	2.3	-0.0	2.3	0.0	-88.66
		200	-0.0	1.7	-0.0	1.7	-0.0	-87.74
		201	-0.0	2.9	-0.0	2.9	-0.0	-88.95
		204	0.1	2.9	-0.0	2.9	0.1	-88.92
		203	0.1	1.7	-0.0	1.7	0.1	-87.60
	Min	Cent	-0.1	-0.0	-0.1	0.0	-0.1	-62.76
		200	-0.1	0.3	-0.1	0.3	-0.1	-82.38
		201	-0.1	-0.3	-0.1	-0.1	-0.3	-15.08
		204	-0.1	-0.3	-0.1	-0.0	-0.3	-12.02
		203	-0.1	0.3	-0.1	0.3	-0.1	-81.19

	NODE	Mxx	Myy	Mxy	Mmax	Mmin	ANGLE
Max	Cent	1.1	0.3	1.0	1.3	0.3	19.31
	200	1.9	0.3	0.9	2.0	0.3	11.65
	201	0.3	0.5	1.0	1.0	0.1	35.80
	204	0.1	0.2	1.1	0.4	-0.1	23.82
	203	2.1	0.5	1.0	2.3	0.4	15.46
Min	Cent	0.7	-1.6	0.1	0.9	-1.9	17.67
	200	1.3	-1.6	0.0	1.4	-1.8	12.54
	201	0.1	-0.7	0.1	0.2	-1.1	22.46
	204	-0.1	-2.6	0.2	0.1	-2.8	18.40
	203	1.4	-1.5	0.2	1.5	-1.7	12.62

	NODE	Vxx	Vyy

Max	Cent	3.3	1.7	
	200	3.2	0.3	
	201	3.2	3.6	
	204	3.5	3.6	
	203	3.5	0.3	
Min	Cent	2.4	0.1	
	200	2.3	-0.8	
	201	2.3	0.5	
	204	2.4	0.5	
	203	2.4	-0.8	

ELEM	MAT	SEC	LC		NODE	Fxx	Fyy	Fxy	Fmax	Fmin	ANGLE
157	1	1	SX (RS)		Cent	0.3	1.2	0.6	1.5	0.0	64.14
					202	0.3	0.9	0.6	1.3	-0.1	59.31
					203	0.3	1.6	0.6	1.8	0.0	69.15
					206	0.4	1.6	0.6	1.8	0.1	68.03
					205	0.4	0.9	0.6	1.3	-0.0	57.37

	NODE	Mxx	Myy	Mxy	Mmax	Mmin	ANGLE
	Cent	1.4	1.3	1.6	3.0	-0.2	44.37
	202	2.3	1.0	1.7	3.5	-0.1	34.39
	203	1.2	1.8	1.5	3.0	-0.0	50.51
	206	1.0	1.6	1.6	2.9	-0.3	50.70
	205	1.1	0.9	1.8	2.8	-0.8	43.54

	NODE	Vxx	Vyy
	Cent	1.4	0.2
	202	2.3	0.3
	203	2.3	0.6
	206	0.5	0.6
	205	0.5	0.3

LC		NODE	Fxx	Fyy	Fxy	Fmax	Fmin	ANGLE
SY (RS)		Cent	0.4	1.3	0.3	1.4	0.3	72.34
		202	0.1	1.4	0.3	1.5	0.1	77.16
		203	0.1	1.3	0.3	1.4	0.1	75.62
		206	0.7	1.3	0.3	1.4	0.6	65.66
		205	0.7	1.4	0.3	1.5	0.6	69.32

	NODE	Mxx	Myy	Mxy	Mmax	Mmin	ANGLE
	Cent	0.4	1.0	0.3	1.1	0.3	67.97
	202	0.2	1.6	0.2	1.6	0.2	81.89
	203	0.1	1.4	0.3	1.5	0.0	76.38
	206	0.7	0.8	0.4	1.1	0.3	48.45
	205	0.7	0.8	0.3	1.1	0.5	50.16

	NODE	Vxx	Vyy
	Cent	0.1	2.3
	202	0.3	2.1
	203	0.3	2.4
	206	0.2	2.4
	205	0.2	2.1

LC		NODE	Fxx	Fyy	Fxy	Fmax	Fmin	ANGLE
RC ENV~1	Max	Cent	0.2	2.1	0.2	2.2	0.2	-69.13
		202	0.0	2.3	0.2	2.3	0.0	-88.77
		203	0.0	2.4	0.2	2.4	0.0	84.65
		206	0.5	2.4	0.2	2.4	0.5	84.50
		205	0.5	2.3	0.2	2.3	0.5	-88.40
	Min	Cent	-0.7	-0.5	-1.1	0.1	-1.4	-48.83
		202	-0.6	-0.6	-1.1	0.2	-1.3	-40.08
		203	-0.6	-0.8	-1.1	0.0	-1.6	-72.95
		206	-1.0	-0.8	-1.1	-0.0	-1.7	-55.38
		205	-1.0	-0.6	-1.1	-0.1	-1.5	-53.04

	NODE	Mxx	Myy	Mxy	Mmax	Mmin	ANGLE
Max	Cent	6.5	2.4	2.0	6.9	1.9	14.32
	202	9.2	2.3	1.9	9.3	2.2	5.93

		203	3.3	2.0	1.8	4.4	1.1	37.48
		206	4.3	3.1	2.2	5.4	1.6	27.12
		205	9.2	2.6	2.3	9.6	2.4	13.24
	Min	Cent	2.6	-1.8	-1.2	3.1	-2.1	-19.78
		202	3.5	-2.4	-1.4	4.0	-2.6	-17.75
		203	0.6	-3.2	-1.1	1.1	-3.5	-23.33
		206	1.4	-1.0	-1.1	1.6	-1.5	6.99
		205	5.0	-0.9	-1.3	5.4	-1.2	2.40

		NODE	Vxx	Vyy
	Max	Cent	9.9	0.2
		202	10.7	0.2
		203	10.7	0.2
		206	9.2	0.2
		205	9.2	0.2
	Min	Cent	5.6	-4.8
		202	4.9	-4.1
		203	4.9	-5.4
		206	6.2	-5.4
		205	6.2	-4.1

LC		NODE	Fxx	Fyy	Fxy	Fmax	Fmin	ANGLE
RC ENV~2	Max	Cent	-0.2	1.3	-0.1	1.6	-0.2	-69.50
		202	-0.2	1.3	-0.1	1.6	-0.2	-68.82
		203	-0.2	1.4	-0.1	1.7	-0.2	-69.53
		206	-0.2	1.4	-0.1	1.7	-0.3	-70.25
		205	-0.2	1.3	-0.1	1.6	-0.2	-69.60
	Min	Cent	-0.5	0.3	-0.8	0.3	-0.8	-78.19
		202	-0.4	0.5	-0.8	0.5	-0.7	-80.81
		203	-0.4	0.1	-0.8	0.2	-0.7	-73.26
		206	-0.5	0.1	-0.8	0.2	-0.8	-73.71
		205	-0.5	0.5	-0.8	0.5	-0.8	-80.96

		NODE	Mxx	Myy	Mxy	Mmax	Mmin	ANGLE
	Max	Cent	4.8	1.1	1.3	5.1	1.0	13.95
		202	6.9	0.7	1.1	7.0	0.7	5.68
		203	2.4	0.3	1.2	2.7	0.3	16.61
		206	3.1	1.6	1.5	3.9	1.3	27.58
		205	6.9	1.7	1.5	7.2	1.7	12.72
	Min	Cent	3.6	-1.0	0.4	3.6	-1.2	7.72
		202	5.1	-1.4	0.3	5.1	-1.5	4.20
		203	1.4	-2.0	0.3	1.5	-2.2	12.34
		206	2.0	-0.4	0.5	2.2	-0.7	16.97
		205	5.7	-0.3	0.4	5.7	-0.4	5.17

		NODE	Vxx	Vyy
	Max	Cent	7.6	-1.7
		202	8.1	-1.4
		203	8.1	-2.0
		206	7.0	-2.0
		205	7.0	-1.4
	Min	Cent	6.5	-3.5
		202	6.4	-3.0
		203	6.4	-3.9
		206	6.5	-3.9
		205	6.5	-3.0

ELEM	MAT	SEC	LC		NODE	Fxx	Fyy	Fxy	Fmax	Fmin	ANGLE
158	1	1	SX (RS)		Cent	0.2	2.2	0.3	2.3	0.2	81.41
					203	0.1	1.6	0.3	1.6	0.0	78.49
					204	0.1	3.0	0.3	3.0	0.1	83.91
					207	0.5	3.0	0.3	3.0	0.5	82.96
					206	0.5	1.6	0.3	1.6	0.4	74.81

		NODE	Mxx	Myy	Mxy	Mmax	Mmin	ANGLE
		Cent	0.4	1.6	1.3	2.5	-0.5	57.45
		203	0.8	1.7	1.3	2.7	-0.1	54.52
		204	0.3	2.3	1.3	2.9	-0.3	63.52
		207	0.4	2.2	1.3	2.8	-0.3	63.25
		206	0.6	1.5	1.3	2.4	-0.3	54.70

	NODE	Vxx	Vyy
	Cent	1.2	2.6
	203	1.3	0.6
	204	1.3	5.6
	207	1.1	5.6
	206	1.1	0.6

LC		NODE	Fxx	Fyy	Fxy	Fmax	Fmin	ANGLE
SY (RS)		Cent	0.3	1.3	0.2	1.3	0.2	80.41
		203	0.0	1.3	0.2	1.3	-0.0	82.19
		204	0.0	1.5	0.2	1.5	-0.0	83.30
		207	0.5	1.5	0.2	1.5	0.5	80.22
		206	0.5	1.3	0.2	1.3	0.5	77.72

	NODE	Mxx	Myy	Mxy	Mmax	Mmin	ANGLE
	Cent	0.1	1.0	0.3	1.1	-0.0	70.38
	203	0.1	1.4	0.3	1.5	0.0	76.16
	204	0.1	1.1	0.3	1.2	0.0	75.98
	207	0.1	0.9	0.3	1.0	-0.1	70.48
	206	0.2	0.8	0.4	1.0	0.0	61.95

	NODE	Vxx	Vyy
	Cent	0.3	1.8
	203	0.2	2.4
	204	0.2	1.3
	207	0.4	1.3
	206	0.4	2.4

LC		NODE	Fxx	Fyy	Fxy	Fmax	Fmin	ANGLE
RC ENV~1	Max	Cent	0.1	3.2	0.1	3.2	0.1	87.30
		203	0.1	2.4	0.1	2.4	0.0	86.41
		204	0.1	4.0	0.1	4.0	0.0	87.90
		207	0.2	4.0	0.1	4.0	0.2	87.80
		206	0.2	2.4	0.1	2.4	0.2	86.12
	Min	Cent	-0.4	-1.3	-0.5	-0.2	-1.5	-22.71
		203	-0.1	-0.7	-0.5	0.1	-1.0	-87.01
		204	-0.1	-1.9	-0.5	-0.1	-2.1	-0.72
		207	-0.8	-1.9	-0.5	-0.6	-2.1	-19.43
		206	-0.8	-0.7	-0.5	-0.3	-1.2	-45.34

		NODE	Mxx	Myy	Mxy	Mmax	Mmin	ANGLE
	Max	Cent	1.6	2.4	2.0	3.8	0.5	52.99
		203	2.7	1.9	1.8	3.9	0.9	40.88
		204	0.6	3.0	1.8	3.9	0.0	63.16
		207	0.4	2.9	2.0	3.8	-0.3	62.68
		206	3.5	3.0	2.0	4.6	1.3	47.61
	Min	Cent	0.6	-2.1	-0.9	0.9	-2.8	7.12
		203	0.8	-3.2	-0.9	1.1	-3.6	-18.93
		204	-0.1	-1.5	-0.9	0.1	-2.1	15.16
		207	-0.3	-3.1	-0.7	0.0	-3.8	-25.47
		206	1.4	-1.1	-0.8	1.7	-1.6	-23.15

		NODE	Vxx	Vyy
	Max	Cent	5.1	1.5
		203	4.6	0.2
		204	4.6	5.7
		207	5.6	5.7
		206	5.6	0.2
	Min	Cent	1.9	-3.6
		203	1.5	-5.4
		204	1.5	-5.5
		207	2.2	-5.5
		206	2.2	-5.4

LC		NODE	Fxx	Fyy	Fxy	Fmax	Fmin	ANGLE
RC ENV~2	Max	Cent	-0.1	1.9	-0.0	2.0	-0.1	-80.48
		203	-0.0	1.4	-0.0	1.5	-0.1	-75.97
		204	-0.0	2.4	-0.0	2.5	-0.0	-81.31

		207	-0.1	2.4	-0.0	2.4	-0.2	-82.84
		206	-0.1	1.4	-0.0	1.5	-0.1	-79.47
	Min	Cent	-0.3	-0.1	-0.4	-0.1	-0.4	-36.62
		203	-0.1	0.2	-0.4	0.2	-0.1	-83.39
		204	-0.1	-0.3	-0.4	-0.1	-0.3	-5.60
		207	-0.6	-0.3	-0.4	-0.1	-0.6	-5.82
		206	-0.6	0.2	-0.4	0.2	-0.7	-83.66

	NODE	Mxx	Myy	Mxy	Mmax	Mmin	ANGLE
Max	Cent	1.2	0.8	1.4	2.0	0.4	31.10
	203	2.0	0.3	1.2	2.4	0.2	18.42
	204	0.4	0.8	1.2	1.6	-0.0	45.11
	207	0.0	0.7	1.4	1.0	-0.2	58.09
	206	2.6	1.5	1.4	3.3	1.2	29.24
Min	Cent	0.8	-1.2	0.5	1.1	-1.7	22.16
	203	1.4	-2.0	0.4	1.5	-2.3	13.11
	204	0.2	-0.7	0.4	0.6	-1.3	33.58
	207	-0.1	-1.9	0.5	0.4	-2.4	23.78
	206	1.8	-0.5	0.5	2.0	-0.8	18.88

	NODE	Vxx	Vyy
Max	Cent	3.8	-0.3
	203	3.5	-2.0
	204	3.5	2.4
	207	4.2	2.4
	206	4.2	-2.0
Min	Cent	2.7	-1.1
	203	2.4	-3.9
	204	2.4	0.1
	207	2.9	0.1
	206	2.9	-3.9

ELEM	MAT	SEC	LC		NODE	Fxx	Fyy	Fxy	Fmax	Fmin	ANGLE
159	1	1	SX (RS)		Cent	1.4	1.4	1.0	2.4	0.4	45.65
					205	0.4	1.0	1.0	1.8	-0.4	53.86
					206	0.4	1.8	1.0	2.4	-0.2	62.89
					209	2.4	1.8	1.0	3.2	1.1	36.71
					208	2.4	1.0	1.0	3.0	0.5	27.52

	NODE	Mxx	Myy	Mxy	Mmax	Mmin	ANGLE
	Cent	2.3	1.1	1.6	3.4	-0.0	34.01
	205	1.1	0.8	1.1	2.1	-0.2	41.86
	206	1.0	2.0	2.0	3.6	-0.5	51.69
	209	2.3	2.1	1.9	4.1	0.4	43.31
	208	9.6	2.2	1.0	9.8	2.1	7.33

	NODE	Vxx	Vyy
	Cent	10.3	2.8
	205	0.5	0.2
	206	0.5	5.5
	209	20.1	5.5
	208	20.1	0.2

LC		NODE	Fxx	Fyy	Fxy	Fmax	Fmin	ANGLE
SY (RS)		Cent	0.9	2.5	0.2	2.5	0.9	83.31
		205	0.4	3.3	0.2	3.4	0.4	86.43
		206	0.4	1.7	0.2	1.7	0.4	81.88
		209	1.4	1.7	0.2	1.8	1.3	61.38
		208	1.4	3.3	0.2	3.4	1.4	84.55

	NODE	Mxx	Myy	Mxy	Mmax	Mmin	ANGLE
	Cent	0.9	1.1	0.5	1.5	0.5	52.76
	205	0.6	1.1	0.5	1.4	0.3	57.62
	206	0.7	0.6	0.4	1.1	0.2	42.85
	209	1.0	1.9	0.4	2.1	0.9	68.06
	208	3.2	2.5	0.5	3.5	2.2	28.96

	NODE	Vxx	Vyy
	Cent	3.5	3.9

		205	0.2	5.4
		206	0.2	2.8
		209	6.9	2.8
		208	6.9	5.4

LC		NODE	Fxx	Fyy	Fxy	Fmax	Fmin	ANGLE
RC ENV~1	Max	Cent	0.6	3.3	0.5	3.3	0.5	-83.84
		205	0.2	4.1	0.5	4.1	0.1	-85.18
		206	0.2	2.7	0.5	3.0	0.1	-64.91
		209	1.3	2.7	0.5	2.8	1.1	72.34
		208	1.3	4.1	0.5	4.1	1.0	-85.06
	Min	Cent	-2.3	-1.7	-1.7	-1.0	-3.1	-44.88
		205	-0.7	-2.6	-1.7	-0.5	-2.8	-18.29
		206	-0.7	-1.0	-1.7	-0.1	-2.4	87.63
		209	-3.9	-1.0	-1.7	-0.6	-4.4	-71.04
		208	-3.9	-2.6	-1.7	-1.9	-4.4	-46.01

		NODE	Mxx	Myy	Mxy	Mmax	Mmin	ANGLE
	Max	Cent	10.0	3.4	2.8	10.9	2.9	17.69
		205	8.8	2.0	1.2	8.9	2.0	2.40
		206	4.2	3.3	3.6	6.3	0.9	31.69
		209	4.4	4.7	4.1	7.7	1.9	46.26
		208	24.6	6.9	1.6	24.7	6.8	4.34
	Min	Cent	3.1	-0.1	-0.8	3.4	-0.4	-20.17
		205	4.9	-2.3	-1.1	5.1	-2.4	-12.10
		206	1.2	-1.7	-1.0	1.6	-2.7	-22.48
		209	-0.3	0.4	-0.6	0.7	-1.6	-60.97
		208	2.0	1.8	-0.7	2.7	1.4	-47.18

		NODE	Vxx	Vyy
	Max	Cent	23.6	0.5
		205	9.2	1.0
		206	9.2	3.1
		209	38.2	3.1
		208	38.2	1.0
	Min	Cent	1.4	-7.4
		205	6.2	-9.8
		206	6.2	-8.0
		209	-3.4	-8.0
		208	-3.4	-9.8

LC		NODE	Fxx	Fyy	Fxy	Fmax	Fmin	ANGLE
RC ENV~2	Max	Cent	-0.2	1.4	-0.1	1.8	-0.2	-70.71
		205	-0.2	1.2	-0.1	1.8	-0.2	-62.74
		206	-0.2	1.6	-0.1	2.1	-0.2	-65.24
		209	-0.2	1.6	-0.1	1.9	-0.2	-75.44
		208	-0.2	1.2	-0.1	1.5	-0.2	-74.35
	Min	Cent	-1.6	0.2	-1.2	0.2	-2.1	-82.47
		205	-0.5	0.4	-1.2	0.4	-1.1	-84.56
		206	-0.5	0.1	-1.2	0.1	-1.1	-78.09
		209	-2.8	0.1	-1.2	0.1	-3.1	-77.92
		208	-2.8	0.4	-1.2	0.4	-3.1	-84.52

		NODE	Mxx	Myy	Mxy	Mmax	Mmin	ANGLE
	Max	Cent	7.4	2.4	1.9	8.0	2.2	17.52
		205	6.7	0.9	0.7	6.7	0.9	2.14
		206	3.1	1.4	2.5	4.6	0.7	32.17
		209	2.7	2.6	2.9	4.8	1.1	45.02
		208	17.9	5.3	1.1	18.0	5.2	4.14
	Min	Cent	4.7	0.3	0.7	4.9	0.1	11.61
		205	5.6	-1.3	0.0	5.6	-1.4	3.10
		206	1.9	-0.9	1.0	2.3	-1.6	20.34
		209	1.9	1.1	1.2	3.6	-0.9	35.78
		208	8.8	2.1	0.3	8.8	2.0	5.12

		NODE	Vxx	Vyy
	Max	Cent	17.3	-3.4
		205	7.0	-4.0
		206	7.0	-1.7
		209	27.7	-1.7
		208	27.7	-4.0

	Min	Cent	8.7	-5.3
		205	6.5	-7.0
		206	6.5	-4.3
		209	10.9	-4.3
		208	10.9	-7.0

ELEM	MAT	SEC	LC		NODE	Fxx	Fyy	Fxy	Fmax	Fmin	ANGLE
160	1	1	SX	(RS)	Cent	0.1	1.9	1.1	2.4	-0.4	64.89
					206	0.7	2.0	1.1	2.6	0.0	60.46
					207	0.7	2.2	1.1	2.8	0.1	62.80
					210	0.7	2.2	1.1	2.8	0.1	62.61
					209	0.7	2.0	1.1	2.6	0.1	60.26

	NODE	Mxx	Myy	Mxy	Mmax	Mmin	ANGLE
	Cent	0.4	1.1	1.1	1.8	-0.4	54.42
	206	0.7	1.9	1.1	2.6	0.0	58.99
	207	0.1	1.3	1.0	1.9	-0.5	60.50
	210	0.4	2.3	1.0	2.7	-0.0	67.19
	209	1.6	2.0	1.1	3.0	0.7	49.38

	NODE	Vxx	Vyy
	Cent	0.7	5.0
	206	1.1	5.5
	207	1.1	5.3
	210	2.2	5.3
	209	2.2	5.5

LC		NODE	Fxx	Fyy	Fxy	Fmax	Fmin	ANGLE
SY	(RS)	Cent	0.1	1.4	0.6	1.6	-0.1	68.93
		206	0.5	1.8	0.6	2.0	0.3	69.09
		207	0.5	2.4	0.6	2.5	0.3	74.29
		210	0.7	2.4	0.6	2.6	0.5	72.72
		209	0.7	1.8	0.6	2.0	0.5	66.51

	NODE	Mxx	Myy	Mxy	Mmax	Mmin	ANGLE
	Cent	0.4	1.1	0.4	1.3	0.2	68.68
	206	0.2	0.6	0.3	0.8	0.0	59.29
	207	0.1	1.2	0.5	1.3	-0.1	69.53
	210	0.3	1.1	0.3	1.2	0.2	71.97
	209	1.3	2.1	0.2	2.1	1.3	75.53

	NODE	Vxx	Vyy
	Cent	1.3	1.1
	206	0.4	2.8
	207	0.4	1.0
	210	2.1	1.0
	209	2.1	2.8

LC		NODE	Fxx	Fyy	Fxy	Fmax	Fmin	ANGLE
RC ENV~1	Max	Cent	0.1	2.4	0.6	2.6	0.1	76.52
		206	0.3	2.9	0.6	3.3	0.2	-68.96
		207	0.3	2.4	0.6	2.4	0.2	87.77
		210	1.0	2.4	0.6	2.5	1.0	68.90
		209	1.0	2.9	0.6	3.7	1.0	-58.38
	Min	Cent	-0.2	-1.4	-1.7	-0.1	-2.5	16.59
		206	-1.1	-1.0	-1.7	-0.0	-2.6	40.79
		207	-1.1	-2.4	-1.7	-0.3	-3.3	-27.34
		210	-0.5	-2.4	-1.7	-0.1	-3.1	9.48
		209	-0.5	-1.0	-1.7	-0.0	-2.3	54.41

		NODE	Mxx	Myy	Mxy	Mmax	Mmin	ANGLE
	Max	Cent	1.3	3.0	2.4	4.1	0.7	57.92
		206	3.4	3.2	2.5	4.8	1.0	48.74
		207	0.7	3.1	1.9	3.7	0.1	66.42
		210	0.1	4.3	2.2	4.8	-0.3	71.09
		209	3.2	4.5	2.9	6.0	2.3	53.25
	Min	Cent	0.5	-0.4	-0.3	1.0	-1.7	53.28
		206	1.3	-1.8	-0.4	1.3	-2.6	-11.06

207	0.1	0.1	-0.5	0.6	-1.1	85.81
210	-0.8	-0.7	-0.3	-0.1	-2.7	-61.81
209	-0.0	0.4	-0.2	0.6	-1.0	-69.51

	NODE	Vxx	Vyy
Max	Cent	5.0	3.5
	206	5.6	3.1
	207	5.6	4.7
	210	5.4	4.7
	209	5.4	3.1
Min	Cent	2.0	-6.6
	206	2.2	-8.0
	207	2.2	-5.9
	210	1.1	-5.9
	209	1.1	-8.0

LC		NODE	Fxx	Fyy	Fxy	Fmax	Fmin	ANGLE
RC ENV~2	Max	Cent	-0.0	0.9	-0.0	1.7	-0.1	-56.22
		206	-0.1	1.9	-0.0	2.3	-0.1	-69.22
		207	-0.1	0.1	-0.0	0.8	-0.4	-53.40
		210	0.7	0.1	-0.0	1.5	-0.3	-36.61
		209	0.7	1.9	-0.0	2.6	0.0	-58.84
	Min	Cent	-0.1	-0.1	-1.2	-0.1	-0.9	-11.82
		206	-0.8	0.1	-1.2	0.1	-1.2	-85.49
		207	-0.8	-0.5	-1.2	-0.1	-1.7	-29.73
		210	-0.1	-0.5	-1.2	-0.1	-1.1	-2.63
		209	-0.1	0.1	-1.2	0.1	-0.1	-84.66

	NODE	Mxx	Myy	Mxy	Mmax	Mmin	ANGLE
Max	Cent	1.0	2.0	1.7	2.8	0.5	48.76
	206	2.5	1.4	1.7	3.5	0.9	30.34
	207	0.5	2.0	1.3	2.6	0.1	60.73
	210	-0.3	2.1	1.5	2.3	-0.4	73.56
	209	2.0	2.5	2.0	3.7	1.1	47.00
Min	Cent	0.9	0.1	0.7	1.8	-0.9	34.36
	206	1.7	-0.9	0.7	2.1	-1.5	20.81
	207	0.2	0.4	0.5	1.3	-0.6	44.72
	210	-0.6	-0.1	0.6	0.9	-1.7	48.21
	209	1.4	0.9	0.9	2.7	-0.5	45.82

	NODE	Vxx	Vyy
Max	Cent	3.7	-0.7
	206	4.2	-1.7
	207	4.2	1.2
	210	3.8	1.2
	209	3.8	-1.7
Min	Cent	3.2	-1.9
	206	2.9	-4.3
	207	2.9	-0.6
	210	3.2	-0.6
	209	3.2	-4.3

ELEM	MAT	SEC	LC		NODE	Fxx	Fyy	Fxy	Fmax	Fmin	ANGLE
161	1	1	SX	(RS)	Cent	3.3	1.4	3.1	5.6	-0.9	36.68
					208	2.5	1.7	3.1	5.2	-1.1	41.54
					209	2.5	1.7	3.1	5.2	-1.1	41.43
					211	9.0	1.7	3.1	10.2	0.5	20.22
					10	9.0	1.7	3.1	10.2	0.5	20.26

	NODE	Mxx	Myy	Mxy	Mmax	Mmin	ANGLE
	Cent	7.0	2.2	2.8	8.3	0.9	24.71
	208	9.6	2.1	8.2	14.9	-3.2	32.71
	209	1.9	1.4	1.2	2.8	0.4	39.34
	211	2.8	4.2	1.6	5.2	1.7	56.96
	10	33.1	6.6	7.7	35.1	4.5	15.03

	NODE	Vxx	Vyy
	Cent	17.0	4.3
	208	20.1	0.6
	209	20.1	8.8

211	54.1	8.8				
10	54.1	0.6				

LC		NODE	Fxx	Fyy	Fxy	Fmax	Fmin	ANGLE
SY (RS)		Cent	0.9	4.8	2.4	5.9	-0.3	64.78
		208	1.1	11.2	2.4	11.8	0.5	77.37
		209	1.1	2.1	2.4	4.0	-0.9	51.19
		211	2.7	2.1	2.4	4.8	-0.0	41.74
		10	2.7	11.2	2.4	11.9	2.0	75.38

	NODE	Mxx	Myy	Mxy	Mmax	Mmin	ANGLE
	Cent	2.4	5.1	1.5	5.8	1.7	65.79
	208	3.3	2.9	1.8	4.9	1.3	41.91
	209	0.9	1.4	1.0	2.2	0.1	52.19
	211	1.3	6.7	4.9	9.6	-1.6	59.44
	10	9.1	22.0	4.7	23.5	7.6	71.98

	NODE	Vxx	Vyy
	Cent	4.9	10.9
	208	6.9	35.9
	209	6.9	14.4
	211	13.1	14.4
	10	13.1	35.9

LC		NODE	Fxx	Fyy	Fxy	Fmax	Fmin	ANGLE
RC ENV~1	Max	Cent	4.5	5.6	1.7	8.2	1.8	-36.92
		208	1.3	12.5	1.7	12.6	0.2	85.57
		209	1.3	2.3	1.7	3.3	-0.2	-55.79
		211	12.9	2.3	1.7	14.5	2.1	-18.49
		10	12.9	12.5	1.7	14.9	6.1	-22.86
	Min	Cent	-2.1	-4.1	-4.9	0.2	-6.3	79.44
		208	-3.9	-9.9	-4.9	-0.7	-11.5	-22.41
		209	-3.9	-1.9	-4.9	0.0	-7.2	36.52
		211	-5.4	-1.9	-4.9	-0.2	-8.4	80.97
		10	-5.4	-9.9	-4.9	0.6	-11.1	84.83

		NODE	Mxx	Myy	Mxy	Mmax	Mmin	ANGLE
	Max	Cent	10.4	9.9	6.8	14.1	3.4	36.09
		208	23.5	4.8	13.0	29.5	2.0	24.83
		209	4.2	6.9	2.8	8.0	2.8	63.81
		211	1.3	9.6	5.2	11.9	0.7	66.53
		10	34.3	32.4	11.7	39.9	12.1	26.24
	Min	Cent	-3.7	-0.2	-0.5	1.3	-3.7	25.70
		208	1.5	-1.6	-4.0	4.8	-4.7	-38.93
		209	0.5	2.6	-0.3	2.9	0.5	-84.41
		211	-5.4	-3.9	-4.6	-0.8	-8.0	-69.05
		10	-31.9	-11.6	-4.0	-7.6	-32.3	-14.45

		NODE	Vxx	Vyy
	Max	Cent	26.4	1.6
		208	38.2	16.0
		209	38.2	15.6
		211	56.3	15.6
		10	56.3	16.0
	Min	Cent	-7.6	-20.3
		208	-3.4	-55.9
		209	-3.4	-13.2
		211	-52.0	-13.2
		10	-52.0	-55.9

LC		NODE	Fxx	Fyy	Fxy	Fmax	Fmin	ANGLE
RC ENV~2	Max	Cent	3.2	1.3	-0.1	5.8	-0.3	-37.14
		208	-0.2	2.6	-0.1	4.3	-0.2	-64.08
		209	-0.2	0.2	-0.1	2.4	-0.3	-55.99
		211	9.1	0.2	-0.1	10.2	-0.3	-18.57
		10	9.1	2.6	-0.1	10.5	1.1	-22.99
	Min	Cent	-0.3	0.2	-3.4	0.2	-1.4	-82.38
		208	-2.8	0.6	-3.4	0.6	-4.4	-84.93
		209	-2.8	-0.2	-3.4	-0.1	-5.1	-66.22

211	-0.3	-0.2	-3.4	-0.1	-1.2	-75.17
10	-0.3	0.6	-3.4	0.6	-0.4	-85.58

	NODE	Mxx	Myy	Mxy	Mmax	Mmin	ANGLE
Max	Cent	5.2	5.3	4.8	8.6	2.6	55.52
	208	17.1	2.1	9.2	21.3	0.4	24.68
	209	3.0	5.3	1.9	6.0	2.1	65.10
	211	-0.7	3.0	1.4	3.2	-1.1	75.03
	10	10.5	13.0	8.2	15.3	8.5	71.59
Min	Cent	1.6	3.4	1.9	6.5	-1.6	52.82
	208	8.3	-0.7	2.3	8.9	-3.0	14.41
	209	2.4	2.4	0.8	4.3	1.0	43.54
	211	-3.8	1.2	0.2	1.4	-3.8	79.18
	10	-9.4	9.7	1.9	11.6	-12.1	69.72

	NODE	Vxx	Vyy
Max	Cent	14.1	-9.4
	208	27.7	-19.1
	209	27.7	3.9
	211	17.4	3.9
	10	17.4	-19.1
Min	Cent	6.2	-14.0
	208	10.9	-31.7
	209	10.9	-1.4
	211	-14.1	-1.4
	10	-14.1	-31.7

ELEM	MAT	SEC	LC	NODE	Fxx	Fyy	Fxy	Fmax	Fmin	ANGLE
162	1	1	SX (RS)	Cent	0.7	2.2	0.6	2.5	0.5	70.55
				209	0.3	1.8	0.6	2.0	0.1	69.81
				210	0.3	2.7	0.6	2.9	0.2	76.27
				22	1.1	2.7	0.6	2.9	0.9	71.38
				211	1.1	1.8	0.6	2.2	0.7	59.78

	NODE	Mxx	Myy	Mxy	Mmax	Mmin	ANGLE
	Cent	0.9	2.1	0.7	2.4	0.6	64.46
	209	1.1	1.4	0.7	2.0	0.5	50.34
	210	0.4	1.8	0.7	2.1	0.1	66.30
	22	0.4	2.8	0.7	3.0	0.2	75.88
	211	2.4	4.1	0.7	4.4	2.2	70.50

	NODE	Vxx	Vyy
	Cent	3.2	5.0
	209	2.2	8.8
	210	2.2	2.7
	22	4.3	2.7
	211	4.3	8.8

LC	NODE	Fxx	Fyy	Fxy	Fmax	Fmin	ANGLE
SY (RS)	Cent	0.3	1.9	0.1	1.9	0.3	87.10
	209	0.5	2.2	0.1	2.2	0.5	87.09
	210	0.5	2.1	0.1	2.1	0.5	86.95
	22	0.3	2.1	0.1	2.1	0.3	87.38
	211	0.3	2.2	0.1	2.2	0.3	87.49

	NODE	Mxx	Myy	Mxy	Mmax	Mmin	ANGLE
	Cent	0.3	1.9	0.5	2.1	0.2	73.13
	209	1.3	1.7	0.7	2.2	0.7	53.39
	210	0.4	2.0	0.7	2.3	0.1	69.34
	22	0.5	1.5	0.6	1.8	0.2	64.79
	211	1.3	6.7	0.7	6.8	1.2	83.07

	NODE	Vxx	Vyy
	Cent	1.4	5.9
	209	2.1	14.4
	210	2.1	2.7
	22	1.3	2.7
	211	1.3	14.4

LC		NODE	Fxx	Fyy	Fxy	Fmax	Fmin	ANGLE
RC ENV~1	Max	Cent	1.0	2.0	0.3	2.1	0.8	72.85
		209	0.6	2.2	0.3	2.2	0.6	-83.22
		210	0.6	2.2	0.3	2.2	0.6	79.18
		22	1.5	2.2	0.3	2.3	1.3	67.36
		211	1.5	2.2	0.3	2.2	1.3	-83.01
	Min	Cent	-0.5	-2.5	-0.9	-0.1	-2.9	-20.49
		209	-0.5	-2.2	-0.9	-0.4	-2.3	-11.11
		210	-0.5	-3.3	-0.9	-0.4	-3.5	-8.95
		22	-0.7	-3.3	-0.9	-0.4	-3.5	-17.37
		211	-0.7	-2.2	-0.9	-0.2	-2.3	-29.10

		NODE	Mxx	Myy	Mxy	Mmax	Mmin	ANGLE
	Max	Cent	1.5	5.2	1.4	5.4	1.3	76.22
		209	3.2	6.8	2.0	7.5	2.7	68.92
		210	0.2	4.2	1.6	4.5	-0.1	75.97
		22	0.3	5.4	0.8	5.5	0.2	83.42
		211	3.3	10.1	1.2	10.2	3.1	84.04
	Min	Cent	-0.3	1.0	-0.5	1.2	-0.5	-71.48
		209	0.7	2.4	-0.2	2.5	0.7	-85.69
		210	-0.7	0.2	-0.4	0.3	-1.2	-67.95
		22	-0.7	-0.3	-0.7	0.3	-1.2	-51.62
		211	-1.5	-3.4	-0.5	-0.5	-3.5	-63.01

		NODE	Vxx	Vyy
	Max	Cent	5.7	6.2
		209	5.4	15.6
		210	5.4	2.4
		22	6.0	2.4
		211	6.0	15.6
	Min	Cent	-0.8	-5.7
		209	1.1	-13.2
		210	1.1	-3.4
		22	-2.6	-3.4
		211	-2.6	-13.2

LC		NODE	Fxx	Fyy	Fxy	Fmax	Fmin	ANGLE
RC ENV~2	Max	Cent	0.7	-0.2	0.0	0.9	-0.2	-19.57
		209	0.3	0.0	0.0	0.7	-0.1	-30.61
		210	0.3	-0.3	0.0	0.5	-0.3	-18.45
		22	1.0	-0.3	0.0	1.2	-0.3	-13.83
		211	1.0	0.0	0.0	1.3	-0.1	-20.82
	Min	Cent	-0.1	-1.1	-0.7	-0.1	-1.3	2.67
		209	-0.1	-0.5	-0.7	-0.1	-0.9	76.12
		210	-0.1	-1.7	-0.7	-0.1	-1.9	1.08
		22	-0.1	-1.7	-0.7	-0.1	-1.8	1.23
		211	-0.1	-0.5	-0.7	-0.1	-0.8	84.55

		NODE	Mxx	Myy	Mxy	Mmax	Mmin	ANGLE
	Max	Cent	0.8	3.2	0.9	3.2	0.6	84.51
		209	2.2	5.1	1.4	5.6	1.8	70.29
		210	-0.0	2.3	1.1	2.6	-0.3	68.59
		22	-0.2	2.7	0.5	2.7	-0.2	-89.10
		211	1.5	3.5	0.8	3.6	1.4	75.19
	Min	Cent	0.3	1.6	0.2	1.9	0.2	67.21
		209	1.9	2.2	0.5	3.3	1.1	50.77
		210	-0.4	1.0	0.3	1.3	-0.8	65.07
		22	-0.5	0.5	-0.1	0.7	-0.7	68.43
		211	0.0	1.8	0.1	2.0	-0.1	70.53

		NODE	Vxx	Vyy
	Max	Cent	3.3	2.0
		209	3.8	3.9
		210	3.8	1.4
		22	2.8	1.4
		211	2.8	3.9
	Min	Cent	1.8	-0.4
		209	3.2	-1.4
		210	3.2	-0.8
		22	0.3	-0.8
		211	0.3	-1.4

ELEM	MAT	SEC	LC		NODE	Fxx	Fyy	Fxy	Fmax	Fmin	ANGLE
163	1	1	SX	(RS)	Cent	0.7	2.2	0.7	2.5	0.5	69.31
					211	1.1	1.8	0.7	2.2	0.7	58.78
					22	1.1	2.7	0.7	2.9	0.9	69.89
					214	0.3	2.7	0.7	2.8	0.2	75.18
					213	0.3	1.8	0.7	2.1	0.1	68.81

		NODE	Mxx	Myy	Mxy	Mmax	Mmin	ANGLE
		Cent	0.9	2.0	0.6	2.3	0.6	65.70
		211	2.4	4.2	0.7	4.5	2.2	70.76
		22	0.4	2.1	0.6	2.3	0.2	71.22
		214	0.5	2.5	0.5	2.6	0.4	76.91
		213	1.1	1.2	0.5	1.7	0.6	48.90

		NODE	Vxx	Vyy
		Cent	3.2	4.7
		211	4.3	9.0
		22	4.3	1.8
		214	2.1	1.8
		213	2.1	9.0

LC		NODE	Fxx	Fyy	Fxy	Fmax	Fmin	ANGLE
SY	(RS)	Cent	0.3	1.6	0.3	1.7	0.2	76.13
		211	0.3	1.8	0.3	1.9	0.2	77.42
		22	0.3	2.0	0.3	2.1	0.2	78.87
		214	0.5	2.0	0.3	2.1	0.5	77.39
		213	0.5	1.8	0.3	1.9	0.4	75.53

		NODE	Mxx	Myy	Mxy	Mmax	Mmin	ANGLE
		Cent	0.4	2.2	0.5	2.4	0.2	75.65
		211	1.1	4.0	0.6	4.1	1.0	78.58
		22	0.5	4.3	0.6	4.4	0.4	81.76
		214	0.3	2.4	0.8	2.7	0.0	71.01
		213	1.5	4.3	0.7	4.5	1.3	76.20

		NODE	Vxx	Vyy
		Cent	1.6	5.9
		211	1.3	14.0
		22	1.3	3.5
		214	2.5	3.5
		213	2.5	14.0

LC		NODE	Fxx	Fyy	Fxy	Fmax	Fmin	ANGLE
RC ENV~1	Max	Cent	0.9	1.9	0.9	2.5	0.4	59.19
		211	1.5	1.8	0.9	2.6	0.7	49.85
		22	1.5	2.1	0.9	2.8	0.8	54.08
		214	0.6	2.1	0.9	2.5	0.3	66.25
		213	0.6	1.8	0.9	2.3	0.3	63.61
	Min	Cent	-0.5	-2.5	-0.4	-0.4	-2.6	-10.86
		211	-0.7	-1.8	-0.4	-0.6	-1.9	-18.43
		22	-0.7	-3.2	-0.4	-0.6	-3.3	-8.78
		214	-0.5	-3.2	-0.4	-0.5	-3.3	-2.32
		213	-0.5	-1.8	-0.4	-0.5	-1.9	-3.73

		NODE	Mxx	Myy	Mxy	Mmax	Mmin	ANGLE
	Max	Cent	1.5	5.2	0.3	5.2	1.5	87.88
		211	3.3	7.4	0.4	7.5	3.2	84.70
		22	0.2	6.8	0.7	6.9	0.2	85.70
		214	0.3	4.5	0.4	4.5	0.3	89.64
		213	3.5	8.3	0.0	8.3	3.5	89.60
	Min	Cent	-0.3	0.7	-1.0	1.1	-0.9	72.12
		211	-1.6	-1.0	-1.0	-0.2	-2.4	-52.88
		22	-0.7	-1.8	-0.7	-0.4	-2.1	-24.46
		214	-0.7	-1.2	-1.3	-0.5	-1.7	-9.40
		213	0.5	-0.4	-1.5	1.6	-1.5	-36.10

		NODE	Vxx	Vyy

Max	Cent	5.7	6.0
	211	6.0	13.1
	22	6.0	5.7
	214	5.8	5.7
	213	5.8	13.1
Min	Cent	-0.7	-5.9
	211	-2.6	-14.9
	22	-2.6	-2.5
	214	0.8	-2.5
	213	0.8	-14.9

LC		NODE	Fxx	Fyy	Fxy	Fmax	Fmin	ANGLE
RC ENV~2	Max	Cent	0.6	-0.2	0.6	0.9	-0.2	19.46
		211	1.0	0.0	0.6	1.3	-0.1	21.13
		22	1.0	-0.3	0.6	1.2	-0.3	13.30
		214	0.2	-0.3	0.6	0.5	-0.3	18.00
		213	0.2	0.0	0.6	0.7	-0.1	32.20
	Min	Cent	-0.1	-1.1	-0.0	-0.1	-1.3	-10.23
		211	-0.1	-0.4	-0.0	-0.0	-0.7	-82.22
		22	-0.1	-1.7	-0.0	-0.1	-1.9	-3.13
		214	-0.1	-1.7	-0.0	-0.1	-1.9	-3.19
		213	-0.1	-0.4	-0.0	-0.0	-0.8	-82.54

		NODE	Mxx	Myy	Mxy	Mmax	Mmin	ANGLE
	Max	Cent	0.8	3.1	0.1	3.1	0.8	-82.32
		211	1.5	3.4	0.0	3.4	1.4	-83.76
		22	-0.1	2.7	0.4	2.7	-0.2	-89.68
		214	-0.1	2.1	-0.0	2.2	-0.2	-78.77
		213	2.5	5.0	-0.4	5.2	2.2	-76.17
	Min	Cent	0.4	1.1	-0.4	1.1	0.4	-89.11
		211	-0.0	1.3	-0.3	1.4	-0.0	-82.36
		22	-0.3	1.2	-0.1	1.3	-0.3	80.43
		214	-0.5	-0.4	-0.5	-0.3	-0.6	-57.31
		213	2.0	1.7	-0.8	2.6	1.5	-23.19

		NODE	Vxx	Vyy
	Max	Cent	3.4	2.1
		211	2.8	1.5
		22	2.8	3.8
		214	4.0	3.8
		213	4.0	1.5
	Min	Cent	1.9	-0.9
		211	0.3	-4.1
		22	0.3	0.9
		214	3.3	0.9
		213	3.3	-4.1

ELEM	MAT	SEC	LC		NODE	Fxx	Fyy	Fxy	Fmax	Fmin	ANGLE
164	1	1	SX (RS)		Cent	1.4	1.6	1.1	2.6	0.4	48.27
					212	2.4	1.3	1.1	3.1	0.6	31.43
					213	2.4	2.0	1.1	3.4	1.1	39.36
					216	0.4	2.0	1.1	2.6	-0.1	62.88
					215	0.4	1.3	1.1	2.1	-0.3	56.07

		NODE	Mxx	Myy	Mxy	Mmax	Mmin	ANGLE
		Cent	2.4	1.0	1.0	3.0	0.5	28.24
		212	9.7	2.2	0.4	9.7	2.2	3.08
		213	2.3	2.2	1.4	3.6	0.9	43.89
		216	1.1	2.0	1.4	3.0	0.0	53.67
		215	1.1	0.9	0.3	1.4	0.7	34.02

		NODE	Vxx	Vyy
		Cent	10.4	3.1
		212	20.2	0.3
		213	20.2	5.8
		216	0.6	5.8
		215	0.6	0.3

LC	NODE	Fxx	Fyy	Fxy	Fmax	Fmin	ANGLE

```
-------- ---- ------ ---------- ---------- ---------- ---------- ---------- ----------
      SY (RS)   Cent        0.9        2.6        0.8        2.9        0.6      67.80
                 212        1.4        3.5        0.8        3.7        1.2      70.43
                 213        1.4        1.8        0.8        2.5        0.8      51.05
                 216        0.4        1.8        0.8        2.2        0.1      64.70
                 215        0.4        3.5        0.8        3.7        0.2      75.71

                NODE        Mxx        Myy        Mxy       Mmax       Mmin      ANGLE
            ---- ------ ---------- ---------- ---------- ---------- ---------- ----------
                Cent        1.2        3.3        1.0        3.6        0.8      68.74
                 212        3.6        5.1        0.7        5.4        3.3      68.46
                 213        0.9        4.0        1.0        4.3        0.6      73.65
                 216        0.9        2.5        1.1        3.0        0.4      63.55
                 215        0.9        1.6        0.8        2.1        0.4      56.15

                NODE        Vxx        Vyy
            ---- ------ ---------- ----------
                Cent        3.7        4.6
                 212        7.1        6.1
                 213        7.1        3.2
                 216        0.4        3.2
                 215        0.4        6.1


      LC        NODE        Fxx        Fyy        Fxy       Fmax       Fmin      ANGLE
-------- ---- ------ ---------- ---------- ---------- ---------- ---------- ----------
RC ENV~1  Max   Cent        0.7        3.2        1.5        3.6       -0.2      69.89
                 212        1.3        3.9        1.5        4.3       -0.0      72.77
                 213        1.3        2.7        1.5        3.6        0.3      57.05
                 216        0.2        2.7        1.5        3.4       -0.4      64.73
                 215        0.2        3.9        1.5        4.3       -0.2      73.17
           Min   Cent       -2.3       -2.1       -0.7       -1.4       -2.8     -31.41
                 212       -3.8       -3.0       -0.7       -2.4       -4.2     -31.46
                 213       -3.8       -1.4       -0.7       -1.2       -4.2     -74.40
                 216       -0.7       -1.4       -0.7       -0.5       -1.8     -31.01
                 215       -0.7       -3.0       -0.7       -0.7       -3.1      -9.55

                NODE        Mxx        Myy        Mxy       Mmax       Mmin      ANGLE
            ---- ------ ---------- ---------- ---------- ---------- ---------- ----------
           Max   Cent       10.5        5.1        0.0       10.9        5.1     -11.41
                 212       25.1        9.1        0.2       25.1        9.1      -1.91
                 213        4.4        6.2       -0.1        6.3        4.3     -81.48
                 216        4.7        3.2        0.2        5.8        3.1     -22.87
                 215        9.5        1.9        0.5        9.5        1.8      -0.72
           Min   Cent        3.2       -2.0       -2.0        4.4       -2.1     -29.58
                 212        2.1       -1.1       -1.3        2.9       -1.3     -40.32
                 213       -0.2       -1.7       -3.1        2.7       -3.1     -29.46
                 216        1.4       -3.8       -2.7        2.7       -3.9     -26.95
                 215        5.1       -4.7       -1.1        5.1       -4.7      -6.27

                NODE        Vxx        Vyy
            ---- ------ ---------- ----------
           Max   Cent       24.2        8.5
                 212       38.9       11.0
                 213       38.9        8.8
                 216        9.7        8.8
                 215        9.7       11.0
           Min   Cent        1.5       -0.6
                 212       -3.3       -1.2
                 213       -3.3       -2.8
                 216        6.3       -2.8
                 215        6.3       -1.2


      LC        NODE        Fxx        Fyy        Fxy       Fmax       Fmin      ANGLE
-------- ---- ------ ---------- ---------- ---------- ---------- ---------- ----------
RC ENV~2  Max   Cent       -0.2        0.9        1.0        1.3       -0.2      69.59
                 212       -0.2        0.6        1.0        0.9       -0.2      73.25
                 213       -0.2        1.3        1.0        1.5       -0.2      75.76
                 216       -0.2        1.3        1.0        1.8       -0.3      64.39
                 215       -0.2        0.6        1.0        1.2       -0.2      57.63
           Min   Cent       -1.6       -0.1       -0.0       -0.1       -2.0     -71.15
                 212       -2.7       -0.0       -0.0       -0.0       -3.0      76.80
                 213       -2.7       -0.2       -0.0       -0.1       -3.0     -38.78
                 216       -0.5       -0.2       -0.0       -0.2       -1.0     -55.34
                 215       -0.5       -0.0       -0.0        0.0       -1.2     -80.20

                NODE        Mxx        Myy        Mxy       Mmax       Mmin      ANGLE
            ---- ------ ---------- ---------- ---------- ---------- ---------- ----------
```

Max	Cent	7.7	2.0	-0.4	8.0	1.7	-12.02
	212	18.3	4.8	-0.1	18.3	4.8	-2.18
	213	2.7	2.3	-0.8	4.1	0.8	-41.08
	216	3.5	1.0	-0.5	4.3	0.1	-24.08
	215	7.2	0.3	0.2	7.2	0.3	-1.10
Min	Cent	4.9	-0.9	-1.5	5.0	-1.0	-4.57
	212	9.0	1.2	-0.6	9.0	1.2	-1.73
	213	2.0	0.1	-2.3	3.0	-0.8	-21.77
	216	2.2	-2.3	-1.9	2.2	-2.4	-7.46
	215	5.9	-2.9	-0.3	5.9	-2.9	0.52

	NODE	Vxx	Vyy
Max	Cent	17.7	5.9
	212	28.1	7.9
	213	28.1	4.7
	216	7.4	4.7
	215	7.4	7.9
Min	Cent	9.0	3.9
	212	11.2	4.8
	213	11.2	2.6
	216	6.8	2.6
	215	6.8	4.8

ELEM	MAT	SEC	LC		NODE	Fxx	Fyy	Fxy	Fmax	Fmin	ANGLE
165	1	1	SX	(RS)	Cent	0.1	2.0	1.1	2.5	-0.4	64.77
					213	0.7	2.1	1.1	2.8	0.1	61.26
					214	0.7	2.1	1.1	2.7	0.1	61.06
					217	0.7	2.1	1.1	2.7	0.0	61.24
					216	0.7	2.1	1.1	2.7	0.1	61.44

	NODE	Mxx	Myy	Mxy	Mmax	Mmin	ANGLE
	Cent	0.3	1.0	0.4	1.2	0.1	64.39
	213	1.6	2.1	0.6	2.5	1.2	54.87
	214	0.2	1.0	0.4	1.2	0.1	67.00
	217	0.1	1.8	0.3	1.8	0.1	79.70
	216	0.7	1.9	0.5	2.1	0.5	69.42

	NODE	Vxx	Vyy
	Cent	0.6	4.6
	213	2.1	5.8
	214	2.1	3.6
	217	1.2	3.6
	216	1.2	5.8

LC		NODE	Fxx	Fyy	Fxy	Fmax	Fmin	ANGLE
SY	(RS)	Cent	0.1	1.0	0.7	1.4	-0.3	60.41
		213	0.7	2.0	0.7	2.3	0.4	65.06
		214	0.7	1.6	0.7	2.0	0.3	60.22
		217	0.5	1.6	0.7	2.0	0.2	63.00
		216	0.5	2.0	0.7	2.3	0.2	67.23

	NODE	Mxx	Myy	Mxy	Mmax	Mmin	ANGLE
	Cent	0.5	3.0	0.7	3.2	0.3	75.40
	213	1.5	4.3	0.7	4.4	1.3	76.72
	214	0.3	3.1	0.6	3.2	0.2	77.56
	217	0.1	2.6	0.7	2.8	-0.1	74.82
	216	0.4	2.4	0.7	2.7	0.2	71.73

	NODE	Vxx	Vyy
	Cent	1.6	2.7
	213	2.5	3.2
	214	2.5	3.4
	217	0.6	3.4
	216	0.6	3.2

LC		NODE	Fxx	Fyy	Fxy	Fmax	Fmin	ANGLE
RC ENV~1	Max	Cent	0.1	2.4	1.6	3.2	-0.5	63.29
		213	0.9	2.9	1.6	3.8	0.3	61.31

		214	0.9	2.2	1.6	3.2	0.1	55.97
		217	0.3	2.2	1.6	3.1	-0.5	59.94
		216	0.3	2.9	1.6	3.7	-0.3	64.54
	Min	Cent	-0.2	-1.6	-0.7	-0.1	-1.8	22.99
		213	-0.5	-1.4	-0.7	-0.4	-1.7	-20.42
		214	-0.5	-2.1	-0.7	-0.5	-2.3	-14.54
		217	-1.0	-2.1	-0.7	-0.7	-2.4	-19.64
		216	-1.0	-1.4	-0.7	-0.7	-1.9	-29.91

		NODE	Mxx	Myy	Mxy	Mmax	Mmin	ANGLE
	Max	Cent	1.5	4.4	-0.1	4.5	1.4	-88.02
		213	3.3	6.4	-0.4	6.4	3.1	-83.90
		214	0.0	4.7	-0.1	4.7	0.0	-88.84
		217	0.5	3.9	0.2	3.9	0.4	87.43
		216	3.7	3.1	-0.1	4.2	2.5	-17.69
	Min	Cent	0.5	-2.2	-1.5	1.3	-2.4	-28.05
		213	0.0	-2.1	-1.9	1.1	-3.1	-28.25
		214	-0.6	-1.5	-1.4	-0.1	-2.5	-23.84
		217	0.2	-3.6	-1.3	0.3	-3.6	-4.17
		216	1.3	-3.9	-1.6	1.9	-4.0	-23.36

		NODE	Vxx	Vyy
	Max	Cent	5.4	6.5
		213	5.8	8.8
		214	5.8	5.8
		217	6.1	5.8
		216	6.1	8.8
	Min	Cent	1.8	-2.7
		213	0.8	-2.8
		214	0.8	-2.8
		217	2.3	-2.8
		216	2.3	-2.8

LC		NODE	Fxx	Fyy	Fxy	Fmax	Fmin	ANGLE
RC ENV~2	Max	Cent	-0.0	0.8	1.1	1.5	-0.3	55.22
		213	0.6	1.6	1.1	2.3	-0.0	56.80
		214	0.6	0.1	1.1	1.4	-0.3	37.23
		217	-0.1	0.1	1.1	0.8	-0.3	53.58
		216	-0.1	1.6	1.1	2.0	-0.2	67.84
	Min	Cent	-0.1	-0.3	-0.0	-0.1	-0.9	-12.91
		213	-0.1	-0.2	-0.0	-0.1	-0.2	-27.81
		214	-0.1	-0.5	-0.0	-0.1	-1.0	-10.29
		217	-0.7	-0.5	-0.0	-0.1	-1.6	25.59
		216	-0.7	-0.2	-0.0	-0.0	-1.2	-17.12

		NODE	Mxx	Myy	Mxy	Mmax	Mmin	ANGLE
	Max	Cent	1.1	1.6	-0.4	2.2	0.3	-54.92
		213	2.1	2.2	-0.6	3.1	0.9	-52.51
		214	-0.2	1.8	-0.3	2.1	-0.3	-70.94
		217	0.4	1.6	-0.1	1.8	0.1	-67.65
		216	2.8	0.9	-0.4	3.2	0.4	-19.29
	Min	Cent	0.9	-1.1	-1.0	1.1	-1.2	-16.52
		213	1.5	0.0	-1.4	2.2	-0.4	-23.79
		214	-0.4	-0.2	-0.9	0.1	-0.8	-44.95
		217	0.2	-2.0	-0.6	0.3	-2.0	-3.03
		216	1.9	-2.4	-1.1	1.9	-2.4	-7.22

		NODE	Vxx	Vyy
	Max	Cent	4.1	4.3
		213	4.0	4.7
		214	4.0	3.8
		217	4.5	3.8
		216	4.5	4.7
	Min	Cent	3.4	1.7
		213	3.3	2.6
		214	3.3	0.6
		217	3.1	0.6
		216	3.1	2.6

ELEM	MAT	SEC	LC		NODE	Fxx	Fyy	Fxy	Fmax	Fmin	ANGLE
166	1	1	SX (RS)		Cent	0.4	1.6	0.6	1.9	0.1	66.89

```
                    215        0.4        1.3        0.6        1.6        0.1      62.95
                    216        0.4        1.9        0.6        2.1        0.2      69.69
                    219        0.4        1.9        0.6        2.1        0.2      70.18
                    218        0.4        1.3        0.6        1.6        0.1      63.70

                   NODE        Mxx        Myy        Mxy       Mmax       Mmin      ANGLE
             ---- ------ ---------- ---------- ---------- ---------- ---------- ----------
                   Cent        1.5        1.4        0.8        2.2        0.7      43.68
                    215        1.2        0.9        1.1        2.2       -0.1      41.89
                    216        1.0        1.7        0.8        2.2        0.5      57.37
                    219        1.3        1.9        0.4        2.1        1.1      62.55
                    218        2.5        1.2        0.8        2.9        0.9      24.57

                   NODE        Vxx        Vyy
             ---- ------ ---------- ----------
                   Cent        1.5        0.3
                    215        0.6        0.3
                    216        0.6        0.4
                    219        2.5        0.4
                    218        2.5        0.3


        LC         NODE        Fxx        Fyy        Fxy       Fmax       Fmin      ANGLE
-------- ---- ------ ---------- ---------- ---------- ---------- ---------- ----------
      SY (RS)   Cent        0.4        1.1        0.8        1.6       -0.1      56.54
                    215        0.7        1.3        0.8        1.9        0.2      55.12
                    216        0.7        0.9        0.8        1.6        0.0      48.52
                    219        0.2        0.9        0.8        1.4       -0.3      57.76
                    218        0.2        1.3        0.8        1.7       -0.2      62.93

                   NODE        Mxx        Myy        Mxy       Mmax       Mmin      ANGLE
             ---- ------ ---------- ---------- ---------- ---------- ---------- ----------
                   Cent        0.6        1.4        1.0        2.1       -0.0      56.74
                    215        1.0        2.1        1.0        2.7        0.4      59.19
                    216        0.9        2.4        1.0        2.9        0.4      63.91
                    219        0.2        0.8        0.9        1.5       -0.5      53.04
                    218        0.3        0.5        1.0        1.4       -0.6      47.95

                   NODE        Vxx        Vyy
             ---- ------ ---------- ----------
                   Cent        0.3        2.9
                    215        0.4        2.9
                    216        0.4        3.0
                    219        0.3        3.0
                    218        0.3        2.9


        LC         NODE        Fxx        Fyy        Fxy       Fmax       Fmin      ANGLE
-------- ---- ------ ---------- ---------- ---------- ---------- ---------- ----------
RC ENV~1  Max   Cent        0.2        2.1        1.0        2.4       -0.2      69.32
                    215        0.4        1.8        1.0        2.4       -0.1      61.44
                    216        0.4        2.4        1.0        2.7       -0.1      71.30
                    219        0.1        2.4        1.0        2.7       -0.2      71.44
                    218        0.1        1.8        1.0        2.3       -0.2      66.07
           Min   Cent       -0.7       -1.1       -0.6       -0.5       -1.3     -30.51
                    215       -1.0       -0.9       -0.6       -0.4       -1.5     -39.80
                    216       -1.0       -1.4       -0.6       -0.5       -1.5     -24.94
                    219       -0.7       -1.4       -0.6       -0.5       -1.5     -23.29
                    218       -0.7       -0.9       -0.6       -0.4       -1.2     -36.98

                   NODE        Mxx        Myy        Mxy       Mmax       Mmin      ANGLE
             ---- ------ ---------- ---------- ---------- ---------- ---------- ----------
           Max   Cent        7.2        1.7        0.4        7.3        1.7      -5.00
                    215        9.8        3.1        0.4       10.0        3.0      -6.42
                    216        4.7        3.2        0.3        4.9        3.0     -11.50
                    219        4.0        1.4        0.5        4.1        1.4      -3.36
                    218       10.3        1.0        0.5       10.3        1.0      -2.53
           Min   Cent        2.8       -4.7       -1.5        3.2       -4.7     -16.72
                    215        5.2       -3.6       -1.8        5.7       -3.6     -13.77
                    216        1.5       -3.9       -1.6        2.2       -3.9     -25.46
                    219        0.8       -5.8       -1.4        1.0       -5.8     -14.04
                    218        3.7       -5.7       -1.5        4.0       -5.7     -12.66

                   NODE        Vxx        Vyy
             ---- ------ ---------- ----------
           Max   Cent       10.5        5.2
                    215        9.7        5.0
                    216        9.7        5.5
                    219       11.4        5.5
```

		218	11.4	5.0	
	Min	Cent	5.6	-0.6	
		215	6.3	-0.7	
		216	6.3	-0.5	
		219	4.9	-0.5	
		218	4.9	-0.7	

LC		NODE	Fxx	Fyy	Fxy	Fmax	Fmin	ANGLE
RC ENV~2	Max	Cent	-0.2	0.8	0.6	1.0	-0.2	67.64
		215	-0.2	0.6	0.6	0.9	-0.2	66.03
		216	-0.2	1.0	0.6	1.2	-0.2	69.87
		219	-0.2	1.0	0.6	1.2	-0.2	69.09
		218	-0.2	0.6	0.6	0.9	-0.2	65.00
	Min	Cent	-0.5	-0.1	-0.0	-0.1	-0.7	-82.71
		215	-0.5	0.0	-0.0	0.0	-0.8	74.27
		216	-0.5	-0.2	-0.0	-0.2	-0.8	-64.35
		219	-0.5	-0.2	-0.0	-0.2	-0.7	-67.95
		218	-0.5	0.0	-0.0	0.0	-0.7	74.04

	NODE	Mxx	Myy	Mxy	Mmax	Mmin	ANGLE
Max	Cent	5.4	0.4	0.1	5.4	0.3	-5.62
	215	7.4	1.0	0.0	7.5	0.9	-6.82
	216	3.4	1.0	-0.0	3.6	0.7	-12.98
	219	3.0	-0.4	0.2	3.0	-0.5	-4.28
	218	7.7	-0.1	0.2	7.7	-0.2	-2.90
Min	Cent	3.9	-2.9	-0.7	3.9	-2.9	-0.13
	215	6.0	-2.1	-0.9	6.0	-2.1	-0.37
	216	2.2	-2.3	-0.8	2.2	-2.3	-1.83
	219	1.8	-3.8	-0.5	1.8	-3.8	0.23
	218	5.6	-3.7	-0.5	5.6	-3.7	0.63

	NODE	Vxx	Vyy
Max	Cent	8.0	3.5
	215	7.4	3.3
	216	7.4	3.6
	219	8.6	3.6
	218	8.6	3.3
Min	Cent	6.8	2.3
	215	6.8	2.1
	216	6.8	2.4
	219	6.8	2.4
	218	6.8	2.1

ELEM	MAT	SEC	LC		NODE	Fxx	Fyy	Fxy	Fmax	Fmin	ANGLE
167	1	1	SX (RS)		Cent	0.2	2.4	0.3	2.5	0.2	81.19
					216	0.5	1.8	0.3	1.9	0.4	76.52
					217	0.5	3.1	0.3	3.1	0.4	82.55
					220	0.1	3.1	0.3	3.1	0.1	83.45
					219	0.1	1.8	0.3	1.9	0.0	79.13

	NODE	Mxx	Myy	Mxy	Mmax	Mmin	ANGLE
	Cent	0.4	1.8	0.4	1.9	0.3	73.09
	216	0.7	1.7	0.5	1.9	0.5	68.04
	217	0.1	1.1	0.4	1.3	-0.0	69.05
	220	0.3	2.5	0.4	2.6	0.2	80.81
	219	0.9	1.8	0.4	2.0	0.7	69.05

	NODE	Vxx	Vyy
	Cent	1.3	1.6
	216	1.2	0.4
	217	1.2	2.9
	220	1.4	2.9
	219	1.4	0.4

LC		NODE	Fxx	Fyy	Fxy	Fmax	Fmin	ANGLE
SY (RS)		Cent	0.3	0.6	0.3	0.8	0.0	58.05
		216	0.5	1.0	0.3	1.1	0.3	62.26
		217	0.5	0.4	0.3	0.8	0.1	41.20
		220	0.0	0.4	0.3	0.6	-0.2	60.15

219	0.0	1.0	0.3	1.1	-0.1	72.28

NODE	Mxx	Myy	Mxy	Mmax	Mmin	ANGLE
Cent	0.2	1.6	0.9	2.0	-0.2	64.52
216	0.4	2.3	0.8	2.6	0.1	69.41
217	0.2	2.7	0.8	2.9	-0.0	72.99
220	0.2	1.2	0.9	1.7	-0.3	60.01
219	0.2	0.8	0.9	1.4	-0.4	54.14

NODE	Vxx	Vyy
Cent	0.5	3.3
216	0.6	3.0
217	0.6	4.6
220	0.3	4.6
219	0.3	3.0

LC		NODE	Fxx	Fyy	Fxy	Fmax	Fmin	ANGLE
RC ENV~1	Max	Cent	0.1	3.2	0.5	3.3	0.0	81.40
		216	0.2	2.4	0.5	2.5	0.1	78.03
		217	0.2	4.1	0.5	4.1	0.2	83.00
		220	0.1	4.1	0.5	4.1	0.0	83.28
		219	0.1	2.4	0.5	2.5	-0.0	78.81
	Min	Cent	-0.4	-1.6	-0.2	-0.4	-1.7	-9.33
		216	-0.8	-1.3	-0.2	-0.7	-1.4	-18.58
		217	-0.8	-2.1	-0.2	-0.7	-2.1	-8.71
		220	-0.2	-2.1	-0.2	-0.1	-2.1	-6.19
		219	-0.2	-1.3	-0.2	-0.1	-1.3	20.89

	NODE	Mxx	Myy	Mxy	Mmax	Mmin	ANGLE
Max	Cent	1.9	1.8	0.4	2.0	1.4	-9.91
	216	3.7	3.1	0.3	3.9	2.4	-10.67
	217	0.3	2.7	0.3	2.8	0.2	83.38
	220	0.5	2.5	0.4	2.5	0.5	-88.89
	219	3.2	1.2	0.4	3.3	1.2	-4.76
Min	Cent	0.6	-4.9	-1.4	1.0	-4.9	-19.86
	216	1.4	-4.0	-1.4	1.8	-4.0	-21.07
	217	-0.2	-3.7	-1.4	0.2	-3.7	-0.34
	220	-0.0	-6.1	-1.3	0.1	-6.1	1.71
	219	0.9	-5.9	-1.3	1.2	-5.9	-13.82

	NODE	Vxx	Vyy
Max	Cent	5.8	4.7
	216	6.1	5.5
	217	6.1	4.8
	220	5.4	4.8
	219	5.4	5.5
Min	Cent	2.0	-2.0
	216	2.3	-0.5
	217	2.3	-4.3
	220	1.7	-4.3
	219	1.7	-0.5

LC		NODE	Fxx	Fyy	Fxy	Fmax	Fmin	ANGLE
RC ENV~2	Max	Cent	-0.1	1.6	0.3	1.7	-0.1	80.55
		216	-0.1	1.0	0.3	1.0	-0.2	78.30
		217	-0.1	2.3	0.3	2.3	-0.2	83.47
		220	-0.0	2.3	0.3	2.3	-0.0	82.10
		219	-0.0	1.0	0.3	1.1	-0.1	73.42
	Min	Cent	-0.3	-0.3	-0.0	-0.1	-0.4	-4.18
		216	-0.6	-0.2	-0.0	-0.1	-0.6	55.71
		217	-0.6	-0.4	-0.0	-0.1	-0.6	60.31
		220	-0.1	-0.4	-0.0	-0.1	-0.4	-2.71
		219	-0.1	-0.2	-0.0	-0.1	-0.2	-10.56

	NODE	Mxx	Myy	Mxy	Mmax	Mmin	ANGLE
Max	Cent	1.4	0.2	0.0	1.5	-0.1	-11.97
	216	2.7	1.0	-0.0	2.9	0.7	-12.35
	217	0.2	0.2	0.0	0.7	-0.5	-48.15
	220	0.3	0.2	0.2	0.7	-0.2	-43.04
	219	2.4	-0.5	0.1	2.4	-0.6	-5.70

Min	Cent	0.9	-3.1	-0.6	0.9	-3.1	-1.37
	216	1.9	-2.4	-0.7	1.9	-2.4	-2.42
	217	0.0	-2.4	-0.6	0.1	-2.4	-3.58
	220	0.1	-3.9	-0.5	0.1	-3.9	0.13
	219	1.6	-3.9	-0.5	1.6	-3.9	-0.37

	NODE	Vxx	Vyy
Max	Cent	4.3	2.9
	216	4.5	3.6
	217	4.5	2.8
	220	4.0	2.8
	219	4.0	3.6
Min	Cent	2.9	1.3
	216	3.1	2.4
	217	3.1	0.0
	220	2.7	0.0
	219	2.7	2.4

ELEM	MAT	SEC	LC	NODE	Fxx	Fyy	Fxy	Fmax	Fmin	ANGLE
168	1	1	SX (RS)	Cent	0.4	1.6	0.0	1.6	0.4	89.66
				218	0.4	1.3	0.0	1.3	0.4	89.55
				219	0.4	1.9	0.0	1.9	0.4	89.73
				222	0.4	1.9	0.0	1.9	0.4	89.73
				221	0.4	1.3	0.0	1.3	0.4	89.55

	NODE	Mxx	Myy	Mxy	Mmax	Mmin	ANGLE
	Cent	1.9	1.5	0.0	1.9	1.5	0.94
	218	2.5	1.2	0.2	2.6	1.2	7.47
	219	1.3	1.8	0.2	1.9	1.3	73.57
	222	1.3	1.8	0.2	1.9	1.3	74.26
	221	2.5	1.2	0.2	2.6	1.2	7.14

	NODE	Vxx	Vyy
	Cent	2.5	0.0
	218	2.5	0.0
	219	2.5	0.0
	222	2.5	0.0
	221	2.5	0.0

LC	NODE	Fxx	Fyy	Fxy	Fmax	Fmin	ANGLE
SY (RS)	Cent	0.0	0.0	0.8	0.8	-0.8	45.57
	218	0.3	0.0	0.8	1.0	-0.6	39.65
	219	0.3	0.0	0.8	1.0	-0.6	39.58
	222	0.3	0.0	0.8	1.0	-0.6	39.60
	221	0.3	0.0	0.8	1.0	-0.6	39.67

	NODE	Mxx	Myy	Mxy	Mmax	Mmin	ANGLE
	Cent	0.0	0.0	0.9	0.9	-0.9	45.00
	218	0.3	0.8	0.9	1.5	-0.4	51.73
	219	0.2	0.8	1.0	1.5	-0.5	52.90
	222	0.2	0.8	1.0	1.5	-0.5	52.90
	221	0.3	0.8	0.9	1.5	-0.4	51.73

	NODE	Vxx	Vyy
	Cent	0.0	2.7
	218	0.3	2.7
	219	0.3	2.8
	222	0.3	2.8
	221	0.3	2.7

LC		NODE	Fxx	Fyy	Fxy	Fmax	Fmin	ANGLE
RC ENV~1	Max	Cent	0.1	2.1	0.8	2.1	0.1	89.79
		218	0.1	1.7	0.8	1.7	0.1	89.74
		219	0.1	2.5	0.8	2.5	0.1	89.82
		222	0.1	2.5	0.8	2.5	0.1	89.82
		221	0.1	1.7	0.8	1.7	0.1	89.74
	Min	Cent	-0.7	-1.1	-0.8	-0.6	-1.1	-0.91
		218	-0.7	-0.9	-0.8	-0.6	-1.0	-1.69

		219	-0.7	-1.4	-0.8	-0.6	-1.4	-0.58
		222	-0.6	-1.4	-0.8	-0.6	-1.4	-0.58
		221	-0.6	-0.9	-0.8	-0.6	-1.0	-1.70

	NODE	Mxx	Myy	Mxy	Mmax	Mmin	ANGLE
Max	Cent	7.2	1.2	0.8	7.2	1.2	2.11
	218	10.3	1.2	0.6	10.3	1.2	0.35
	219	4.0	1.4	0.7	4.0	1.4	1.06
	222	4.1	1.3	1.1	4.2	1.3	5.25
	221	10.5	1.1	1.0	10.5	1.1	2.63
Min	Cent	2.3	-5.6	-1.1	2.3	-5.7	-2.46
	218	3.8	-5.5	-1.2	3.8	-5.6	-4.94
	219	0.8	-6.0	-1.2	0.9	-6.1	-7.54
	222	0.8	-5.6	-1.0	0.8	-5.7	-4.30
	221	3.8	-5.3	-1.0	3.8	-5.4	-2.94

	NODE	Vxx	Vyy
Max	Cent	11.5	2.9
	218	11.4	2.8
	219	11.4	3.0
	222	11.5	3.0
	221	11.5	2.8
Min	Cent	5.0	-2.6
	218	4.9	-2.6
	219	4.9	-2.6
	222	5.0	-2.6
	221	5.0	-2.6

LC		NODE	Fxx	Fyy	Fxy	Fmax	Fmin	ANGLE
RC ENV~2	Max	Cent	-0.2	0.8	0.0	0.8	-0.2	-89.87
		218	-0.2	0.5	0.0	0.5	-0.2	-89.84
		219	-0.2	1.0	0.0	1.0	-0.2	-89.90
		222	-0.2	1.0	0.0	1.0	-0.2	-89.90
		221	-0.2	0.5	0.0	0.5	-0.2	-89.84
	Min	Cent	-0.5	-0.1	-0.0	-0.1	-0.5	-89.11
		218	-0.5	-0.0	-0.0	-0.0	-0.5	-88.90
		219	-0.5	-0.2	-0.0	-0.2	-0.5	-86.75
		222	-0.5	-0.2	-0.0	-0.2	-0.5	-86.00
		221	-0.5	-0.0	-0.0	-0.0	-0.5	-88.82

	NODE	Mxx	Myy	Mxy	Mmax	Mmin	ANGLE
Max	Cent	5.4	-0.2	0.5	5.4	-0.2	1.51
	218	7.7	-0.0	0.4	7.7	-0.0	-0.09
	219	3.0	-0.4	0.4	3.0	-0.4	0.24
	222	3.0	-0.5	0.7	3.1	-0.5	4.49
	221	7.8	-0.1	0.6	7.8	-0.1	2.14
Min	Cent	3.7	-3.6	-0.2	3.7	-3.6	1.74
	218	5.6	-3.5	-0.3	5.6	-3.5	0.93
	219	1.8	-3.9	-0.3	1.8	-3.9	2.03
	222	1.8	-3.6	-0.1	1.8	-3.7	3.15
	221	5.7	-3.4	-0.1	5.7	-3.4	1.56

	NODE	Vxx	Vyy
Max	Cent	8.6	0.1
	218	8.6	0.1
	219	8.6	0.2
	222	8.7	0.2
	221	8.7	0.1
Min	Cent	6.8	-0.3
	218	6.8	-0.2
	219	6.8	-0.5
	222	6.9	-0.5
	221	6.9	-0.2

ELEM	MAT	SEC	LC		NODE	Fxx	Fyy	Fxy	Fmax	Fmin	ANGLE
169	1	1	SX (RS)		Cent	0.1	2.6	0.0	2.6	0.1	89.95
					219	0.1	1.9	0.0	1.9	0.1	89.93
					220	0.1	3.4	0.0	3.4	0.1	89.96
					223	0.1	3.4	0.0	3.4	0.1	89.96
					222	0.1	1.9	0.0	1.9	0.1	89.93

	NODE	Mxx	Myy	Mxy	Mmax	Mmin	ANGLE
	Cent	0.5	1.9	0.0	1.9	0.5	89.77
	219	0.9	1.8	0.1	1.8	0.8	83.40
	220	0.2	2.1	0.1	2.1	0.2	86.91
	223	0.2	2.1	0.1	2.1	0.2	87.15
	222	0.9	1.8	0.1	1.8	0.8	83.88

	NODE	Vxx	Vyy
	Cent	1.4	0.0
	219	1.4	0.0
	220	1.4	0.0
	223	1.4	0.0
	222	1.4	0.0

LC		NODE	Fxx	Fyy	Fxy	Fmax	Fmin	ANGLE
SY (RS)		Cent	0.0	0.0	0.2	0.3	-0.2	46.66
		219	0.1	0.0	0.2	0.3	-0.2	40.77
		220	0.1	0.0	0.2	0.3	-0.2	40.59
		223	0.1	0.0	0.2	0.3	-0.2	40.60
		222	0.1	0.0	0.2	0.3	-0.2	40.78

	NODE	Mxx	Myy	Mxy	Mmax	Mmin	ANGLE
	Cent	0.0	0.0	0.9	0.9	-0.9	45.00
	219	0.2	0.8	0.9	1.4	-0.4	54.21
	220	0.2	1.2	0.9	1.7	-0.3	60.75
	223	0.2	1.2	0.9	1.7	-0.3	60.75
	222	0.2	0.8	0.9	1.4	-0.4	54.21

	NODE	Vxx	Vyy
	Cent	0.0	3.3
	219	0.3	2.8
	220	0.3	4.6
	223	0.3	4.6
	222	0.3	2.8

LC		NODE	Fxx	Fyy	Fxy	Fmax	Fmin	ANGLE
RC ENV~1	Max	Cent	0.1	3.5	0.2	3.5	0.1	89.97
		219	0.1	2.5	0.2	2.5	0.1	89.96
		220	0.1	4.5	0.2	4.5	0.1	89.98
		223	0.1	4.5	0.2	4.5	0.1	89.98
		222	0.1	2.5	0.2	2.5	0.1	89.96
	Min	Cent	-0.2	-1.7	-0.2	-0.2	-1.7	-0.09
		219	-0.2	-1.3	-0.2	-0.2	-1.3	-0.12
		220	-0.2	-2.2	-0.2	-0.2	-2.2	-0.06
		223	-0.2	-2.2	-0.2	-0.2	-2.2	-0.06
		222	-0.2	-1.3	-0.2	-0.2	-1.3	-0.12

	NODE	Mxx	Myy	Mxy	Mmax	Mmin	ANGLE
Max	Cent	1.8	1.4	0.8	1.8	1.3	6.52
	219	3.2	1.2	0.6	3.2	1.2	1.36
	220	0.5	1.5	0.7	1.5	0.3	-85.83
	223	0.3	1.7	0.9	1.7	0.3	87.84
	222	3.3	1.1	0.9	3.4	1.1	5.11
Min	Cent	0.5	-5.8	-1.0	0.5	-5.9	-2.62
	219	1.0	-6.1	-1.1	1.0	-6.2	-5.42
	220	-0.1	-5.2	-1.1	-0.0	-5.2	-6.37
	223	-0.0	-6.4	-0.9	-0.0	-6.5	-3.22
	222	1.0	-5.7	-0.9	1.0	-5.8	-2.62

	NODE	Vxx	Vyy
Max	Cent	5.4	3.3
	219	5.4	3.0
	220	5.4	4.3
	223	5.5	4.3
	222	5.5	3.0
Min	Cent	1.7	-3.4
	219	1.7	-2.6
	220	1.7	-4.9
	223	1.8	-4.9

		222	1.8	-2.6			

LC		NODE	Fxx	Fyy	Fxy	Fmax	Fmin	ANGLE
RC ENV~2	Max	Cent	0.0	1.9	-0.0	1.9	0.0	-89.98
		219	0.0	1.1	-0.0	1.1	0.0	-89.96
		220	0.0	2.7	-0.0	2.7	0.0	-89.98
		223	0.0	2.7	-0.0	2.7	0.0	-89.98
		222	0.0	1.1	-0.0	1.1	0.0	-89.96
	Min	Cent	-0.1	-0.3	-0.0	-0.1	-0.3	-0.20
		219	-0.1	-0.2	-0.0	-0.1	-0.2	-0.54
		220	-0.1	-0.4	-0.0	-0.1	-0.4	-0.12
		223	-0.1	-0.4	-0.0	-0.1	-0.4	-0.12
		222	-0.1	-0.2	-0.0	-0.1	-0.2	-0.54

	NODE	Mxx	Myy	Mxy	Mmax	Mmin	ANGLE
Max	Cent	1.3	-0.4	0.5	1.3	-0.4	3.66
	219	2.4	-0.4	0.4	2.4	-0.4	0.58
	220	0.3	-0.5	0.4	0.4	-0.5	5.87
	223	0.2	-0.3	0.6	0.3	-0.3	10.02
	222	2.4	-0.5	0.6	2.5	-0.5	4.41
Min	Cent	0.8	-3.8	-0.1	0.9	-3.8	3.25
	219	1.6	-4.0	-0.2	1.6	-4.0	1.88
	220	0.1	-3.4	-0.2	0.1	-3.4	3.18
	223	0.0	-4.2	-0.1	0.1	-4.2	4.71
	222	1.6	-3.7	-0.1	1.7	-3.8	3.21

	NODE	Vxx	Vyy
Max	Cent	4.0	0.5
	219	4.0	0.2
	220	4.0	1.4
	223	4.0	1.4
	222	4.0	0.2
Min	Cent	2.8	-0.1
	219	2.7	-0.5
	220	2.7	-0.3
	223	2.8	-0.3
	222	2.8	-0.5

ELEM	MAT	SEC	LC		NODE	Fxx	Fyy	Fxy	Fmax	Fmin	ANGLE
170	1	1	SX (RS)		Cent	0.4	1.6	0.6	1.8	0.2	67.06
					221	0.4	1.3	0.6	1.6	0.1	63.81
					222	0.4	1.9	0.6	2.1	0.2	70.39
					225	0.4	1.9	0.6	2.1	0.2	69.88
					224	0.4	1.3	0.6	1.6	0.1	63.02

	NODE	Mxx	Myy	Mxy	Mmax	Mmin	ANGLE
	Cent	1.5	1.4	0.7	2.2	0.7	43.72
	221	2.5	1.2	0.7	2.9	0.9	24.41
	222	1.3	1.9	0.4	2.1	1.1	62.87
	225	1.0	1.7	0.8	2.2	0.5	57.54
	224	1.2	0.9	1.1	2.2	-0.1	41.94

	NODE	Vxx	Vyy
	Cent	1.5	0.3
	221	2.5	0.3
	222	2.5	0.4
	225	0.6	0.4
	224	0.6	0.3

LC		NODE	Fxx	Fyy	Fxy	Fmax	Fmin	ANGLE
SY (RS)		Cent	0.4	1.1	0.8	1.6	-0.1	55.59
		221	0.2	1.3	0.8	1.7	-0.3	62.14
		222	0.2	0.9	0.8	1.4	-0.4	56.90
		225	0.7	0.9	0.8	1.6	-0.0	47.51
		224	0.7	1.3	0.8	1.8	0.1	54.09

	NODE	Mxx	Myy	Mxy	Mmax	Mmin	ANGLE
	Cent	0.6	1.4	1.0	2.1	-0.0	56.74

221	0.3	0.5	1.0	1.4	-0.6	47.95
222	0.2	0.8	0.9	1.5	-0.5	53.04
225	0.9	2.4	1.0	2.9	0.4	63.91
224	1.0	2.1	1.0	2.7	0.4	59.19

NODE	Vxx	Vyy
Cent	0.3	2.9
221	0.3	2.9
222	0.3	3.0
225	0.4	3.0
224	0.4	2.9

LC		NODE	Fxx	Fyy	Fxy	Fmax	Fmin	ANGLE
RC ENV~1	Max	Cent	0.2	2.1	0.6	2.2	0.1	79.71
		221	0.1	1.8	0.6	1.9	0.1	74.23
		222	0.1	2.4	0.6	2.5	0.1	81.06
		225	0.4	2.4	0.6	2.5	0.2	80.98
		224	0.4	1.8	0.6	1.9	0.2	69.51
	Min	Cent	-0.7	-1.1	-1.0	-0.2	-1.8	48.89
		221	-0.6	-0.8	-1.0	-0.1	-1.7	-66.57
		222	-0.6	-1.4	-1.0	-0.3	-1.9	23.78
		225	-1.0	-1.4	-1.0	-0.2	-1.9	-68.40
		224	-1.0	-0.8	-1.0	-0.1	-1.9	-62.96

	NODE	Mxx	Myy	Mxy	Mmax	Mmin	ANGLE
Max	Cent	7.4	1.5	1.9	7.7	1.3	9.63
	221	10.4	0.9	1.6	10.5	0.8	5.40
	222	4.1	1.3	1.6	4.3	1.2	9.31
	225	5.0	3.0	2.3	5.6	1.8	18.85
	224	10.5	2.9	2.3	10.9	2.5	9.60
Min	Cent	2.9	-4.4	-0.7	2.9	-4.6	-6.92
	221	3.8	-5.7	-0.9	3.8	-5.8	-6.87
	222	0.8	-6.0	-0.8	0.8	-6.2	-4.84
	225	1.5	-3.1	-0.6	1.6	-3.4	-8.54
	224	5.3	-3.1	-0.8	5.4	-3.2	-7.91

	NODE	Vxx	Vyy
Max	Cent	10.9	0.9
	221	11.5	0.9
	222	11.5	0.9
	225	10.5	0.9
	224	10.5	0.9
Min	Cent	5.7	-5.7
	221	5.0	-5.2
	222	5.0	-6.2
	225	6.4	-6.2
	224	6.4	-5.2

LC		NODE	Fxx	Fyy	Fxy	Fmax	Fmin	ANGLE
RC ENV~2	Max	Cent	-0.2	0.8	0.0	1.0	-0.2	-67.34
		221	-0.2	0.6	0.0	0.9	-0.2	-64.66
		222	-0.2	0.9	0.0	1.2	-0.2	-68.92
		225	-0.2	0.9	0.0	1.2	-0.2	-69.60
		224	-0.2	0.6	0.0	0.9	-0.2	-65.57
	Min	Cent	-0.5	-0.1	-0.6	-0.1	-0.7	82.53
		221	-0.5	-0.0	-0.6	0.0	-0.7	-71.15
		222	-0.5	-0.2	-0.6	-0.2	-0.7	65.46
		225	-0.5	-0.2	-0.6	-0.2	-0.7	54.20
		224	-0.5	-0.0	-0.6	0.0	-0.8	-70.09

	NODE	Mxx	Myy	Mxy	Mmax	Mmin	ANGLE
Max	Cent	5.5	0.2	1.3	5.7	0.2	8.74
	221	7.7	-0.3	1.0	7.8	-0.3	4.87
	222	3.0	-0.5	1.0	3.1	-0.5	8.73
	225	3.6	0.8	1.5	4.0	0.7	18.39
	224	7.8	0.8	1.5	8.1	0.8	9.04
Min	Cent	4.0	-2.8	0.2	4.1	-2.9	3.99
	221	5.7	-3.7	0.1	5.7	-3.7	1.88
	222	1.8	-3.9	0.1	1.8	-4.0	4.96
	225	2.4	-1.9	0.3	2.4	-2.1	8.72
	224	6.3	-1.8	0.3	6.4	-1.9	2.67

		NODE	Vxx	Vyy
	Max	Cent	8.2	-2.0
		221	8.7	-1.9
		222	8.7	-2.1
		225	7.9	-2.1
		224	7.9	-1.9
	Min	Cent	7.0	-4.0
		221	6.9	-3.7
		222	6.9	-4.3
		225	7.0	-4.3
		224	7.0	-3.7

ELEM	MAT	SEC	LC		NODE	Fxx	Fyy	Fxy	Fmax	Fmin	ANGLE
171	1	1	SX	(RS)	Cent	0.2	2.4	0.3	2.5	0.2	81.28
					222	0.1	1.8	0.3	1.9	0.1	79.22
					223	0.1	3.1	0.3	3.1	0.1	83.53
					226	0.5	3.1	0.3	3.1	0.4	82.64
					225	0.5	1.8	0.3	1.9	0.4	76.61

	NODE	Mxx	Myy	Mxy	Mmax	Mmin	ANGLE
	Cent	0.4	1.8	0.4	1.9	0.3	73.35
	222	0.9	1.8	0.4	2.0	0.7	69.34
	223	0.3	2.5	0.4	2.6	0.2	80.97
	226	0.1	1.1	0.4	1.3	-0.0	69.48
	225	0.7	1.7	0.5	1.9	0.5	68.30

	NODE	Vxx	Vyy
	Cent	1.3	1.6
	222	1.4	0.4
	223	1.4	2.9
	226	1.2	2.9
	225	1.2	0.4

LC		NODE	Fxx	Fyy	Fxy	Fmax	Fmin	ANGLE
SY	(RS)	Cent	0.3	0.5	0.3	0.7	0.0	56.23
		222	0.0	0.9	0.3	1.0	-0.1	71.40
		223	0.0	0.4	0.3	0.6	-0.2	59.71
		226	0.5	0.4	0.3	0.8	0.1	40.64
		225	0.5	0.9	0.3	1.1	0.3	60.48

	NODE	Mxx	Myy	Mxy	Mmax	Mmin	ANGLE
	Cent	0.2	1.6	0.9	2.0	-0.2	64.52
	222	0.2	0.8	0.9	1.4	-0.4	54.14
	223	0.2	1.2	0.9	1.7	-0.3	60.01
	226	0.2	2.7	0.8	2.9	-0.0	72.99
	225	0.4	2.3	0.8	2.6	0.1	69.41

	NODE	Vxx	Vyy
	Cent	0.5	3.3
	222	0.3	3.0
	223	0.3	4.6
	226	0.6	4.6
	225	0.6	3.0

LC		NODE	Fxx	Fyy	Fxy	Fmax	Fmin	ANGLE
RC ENV~1	Max	Cent	0.1	3.2	0.2	3.2	0.1	86.19
		222	0.1	2.4	0.2	2.4	0.1	84.96
		223	0.1	4.1	0.2	4.1	0.1	87.06
		226	0.2	4.1	0.2	4.1	0.2	86.93
		225	0.2	2.4	0.2	2.4	0.2	84.57
	Min	Cent	-0.4	-1.6	-0.5	-0.2	-1.8	-18.60
		222	-0.2	-1.3	-0.5	-0.1	-1.5	-16.53
		223	-0.2	-2.1	-0.5	-0.1	-2.2	-5.51
		226	-0.8	-2.1	-0.5	-0.6	-2.2	-17.55
		225	-0.8	-1.3	-0.5	-0.5	-1.6	-29.96

NODE	Mxx	Myy	Mxy	Mmax	Mmin	ANGLE

Max	Cent	2.0	1.7	1.8	2.5	0.9	48.35
	222	3.2	1.2	1.6	3.5	1.0	11.05
	223	0.7	2.2	1.5	2.3	0.3	74.16
	226	0.3	2.8	1.8	3.2	-0.1	68.60
	225	3.9	2.8	1.9	4.5	1.6	18.96
Min	Cent	0.6	-4.6	-0.6	0.7	-4.9	-3.92
	222	1.0	-6.1	-0.7	1.0	-6.3	-3.59
	223	-0.1	-4.4	-0.7	-0.1	-4.7	-3.95
	226	-0.1	-4.6	-0.5	-0.0	-5.0	-6.85
	225	1.5	-3.2	-0.5	1.5	-3.5	-3.12

	NODE	Vxx	Vyy
Max	Cent	5.9	1.9
	222	5.5	0.9
	223	5.5	3.8
	226	6.4	3.8
	225	6.4	0.9
Min	Cent	2.1	-4.8
	222	1.8	-6.2
	223	1.8	-5.3
	226	2.4	-5.3
	225	2.4	-6.2

LC		NODE	Fxx	Fyy	Fxy	Fmax	Fmin	ANGLE
RC ENV~2	Max	Cent	-0.1	1.6	0.0	1.7	-0.1	-80.60
		222	-0.0	1.0	0.0	1.1	-0.1	-73.49
		223	-0.0	2.3	0.0	2.3	-0.0	-82.18
		226	-0.1	2.3	0.0	2.3	-0.1	-83.51
		225	-0.1	1.0	0.0	1.0	-0.1	-78.26
	Min	Cent	-0.3	-0.3	-0.3	-0.1	-0.4	-59.94
		222	-0.1	-0.2	-0.3	-0.1	-0.2	11.82
		223	-0.1	-0.4	-0.3	-0.1	-0.4	3.28
		226	-0.5	-0.4	-0.3	-0.1	-0.6	-58.16
		225	-0.5	-0.2	-0.3	-0.1	-0.6	-41.45

	NODE	Mxx	Myy	Mxy	Mmax	Mmin	ANGLE
Max	Cent	1.4	0.1	1.2	1.8	-0.0	19.27
	222	2.4	-0.5	1.1	2.6	-0.6	10.56
	223	0.5	-0.1	1.0	0.8	-0.2	28.12
	226	0.1	0.2	1.2	0.6	-0.2	30.05
	225	2.9	0.7	1.3	3.2	0.6	18.59
Min	Cent	1.0	-2.9	0.2	1.0	-3.1	9.12
	222	1.6	-4.0	0.2	1.6	-4.1	5.42
	223	0.2	-2.9	0.1	0.2	-3.0	12.57
	226	0.0	-2.9	0.3	0.2	-3.2	14.35
	225	2.0	-2.0	0.3	2.1	-2.2	9.30

	NODE	Vxx	Vyy
Max	Cent	4.4	-1.3
	222	4.0	-2.1
	223	4.0	0.9
	226	4.7	0.9
	225	4.7	-2.1
Min	Cent	3.0	-2.1
	222	2.8	-4.3
	223	2.8	-0.9
	226	3.3	-0.9
	225	3.3	-4.3

ELEM	MAT	SEC	LC		NODE	Fxx	Fyy	Fxy	Fmax	Fmin	ANGLE
172	1	1	SX	(RS)	Cent	1.4	1.6	1.1	2.6	0.4	48.10
					224	0.4	1.3	1.1	2.0	-0.3	55.87
					225	0.4	2.0	1.1	2.6	-0.1	62.94
					228	2.4	2.0	1.1	3.3	1.1	39.23
					227	2.4	1.3	1.1	3.1	0.6	31.07

	NODE	Mxx	Myy	Mxy	Mmax	Mmin	ANGLE
	Cent	2.4	1.0	1.0	3.0	0.5	28.27
	224	1.2	0.9	0.3	1.4	0.7	34.12
	225	1.1	2.0	1.4	3.0	0.0	53.76

		228	2.3	2.2	1.4	3.6	0.9	44.01
		227	9.7	2.2	0.4	9.7	2.2	3.09

	NODE	Vxx	Vyy
	Cent	10.4	3.1
	224	0.6	0.3
	225	0.6	5.8
	228	20.1	5.8
	227	20.1	0.3

LC		NODE	Fxx	Fyy	Fxy	Fmax	Fmin	ANGLE
SY (RS)		Cent	0.9	2.6	0.8	2.9	0.6	67.27
		224	0.4	3.4	0.8	3.6	0.2	75.44
		225	0.4	1.7	0.8	2.1	0.0	64.09
		228	1.4	1.7	0.8	2.4	0.8	50.10
		227	1.4	3.4	0.8	3.7	1.1	69.97

	NODE	Mxx	Myy	Mxy	Mmax	Mmin	ANGLE
	Cent	1.2	3.3	1.0	3.6	0.8	68.74
	224	0.9	1.6	0.8	2.1	0.4	56.15
	225	0.9	2.5	1.1	3.0	0.4	63.55
	228	0.9	4.0	1.0	4.3	0.6	73.65
	227	3.6	5.1	0.7	5.4	3.3	68.46

	NODE	Vxx	Vyy
	Cent	3.7	4.6
	224	0.4	6.1
	225	0.4	3.2
	228	7.1	3.2
	227	7.1	6.1

LC		NODE	Fxx	Fyy	Fxy	Fmax	Fmin	ANGLE
RC ENV~1	Max	Cent	0.7	3.1	0.7	3.2	0.4	82.37
		224	0.2	3.8	0.7	3.9	0.1	83.96
		225	0.2	2.7	0.7	2.8	0.1	75.99
		228	1.3	2.7	0.7	2.9	1.0	67.81
		227	1.3	3.8	0.7	3.9	0.8	83.78
	Min	Cent	-2.2	-2.0	-1.5	-0.6	-3.2	-41.15
		224	-0.7	-2.9	-1.5	-0.2	-3.5	-41.54
		225	-0.7	-1.3	-1.5	-0.2	-2.6	-66.37
		228	-3.7	-1.3	-1.5	-0.6	-4.4	-63.32
		227	-3.7	-2.9	-1.5	-1.5	-4.3	-41.27

		NODE	Mxx	Myy	Mxy	Mmax	Mmin	ANGLE
	Max	Cent	11.0	4.8	3.2	11.7	3.8	15.55
		224	10.2	1.6	1.5	10.4	1.5	5.95
		225	4.9	3.0	3.6	6.6	1.2	26.56
		228	4.5	5.8	4.3	7.0	1.8	60.86
		227	25.8	8.7	2.2	25.9	8.5	4.57
	Min	Cent	3.3	-1.8	-0.3	3.4	-1.8	-6.22
		224	5.2	-4.3	-0.8	5.2	-4.5	-3.36
		225	1.5	-3.6	-0.5	1.5	-4.3	-9.54
		228	-0.1	-2.1	-0.2	-0.0	-2.1	-24.95
		227	2.2	-1.5	-0.5	2.3	-1.5	-8.81

		NODE	Vxx	Vyy
	Max	Cent	24.8	0.9
		224	10.5	1.3
		225	10.5	3.2
		228	39.6	3.2
		227	39.6	1.3
	Min	Cent	1.6	-10.1
		224	6.4	-12.0
		225	6.4	-9.0
		228	-3.2	-9.0
		227	-3.2	-12.0

LC		NODE	Fxx	Fyy	Fxy	Fmax	Fmin	ANGLE

RC ENV~2	Max	Cent	-0.2	0.9	0.1	1.3	-0.2	-69.31
		224	-0.2	0.5	0.1	1.2	-0.2	-57.14
		225	-0.2	1.2	0.1	1.7	-0.3	-64.22
		228	-0.1	1.2	0.1	1.5	-0.2	-75.60
		227	-0.1	0.5	0.1	0.9	-0.1	-72.95
	Min	Cent	-1.6	-0.1	-1.0	-0.1	-2.0	58.77
		224	-0.5	-0.1	-1.0	-0.0	-1.2	-57.51
		225	-0.5	-0.2	-1.0	-0.2	-1.0	45.67
		228	-2.6	-0.2	-1.0	-0.1	-2.9	23.72
		227	-2.6	-0.1	-1.0	-0.1	-2.9	-73.24

	NODE	Mxx	Myy	Mxy	Mmax	Mmin	ANGLE
Max	Cent	8.0	1.7	2.2	8.5	1.5	14.98
	224	7.6	0.0	1.0	7.7	0.0	5.27
	225	3.6	0.8	2.5	4.8	0.2	26.55
	228	3.1	1.9	3.0	5.0	0.9	38.20
	227	18.7	5.1	1.4	18.8	5.0	4.15
Min	Cent	5.2	-0.5	0.6	5.4	-0.8	9.38
	224	6.2	-2.7	-0.1	6.2	-2.8	-0.48
	225	2.3	-2.2	0.8	2.5	-2.7	13.36
	228	2.1	1.0	1.1	3.2	-1.1	39.64
	227	9.5	1.9	0.2	9.5	1.8	5.32

	NODE	Vxx	Vyy
Max	Cent	18.1	-3.6
	224	7.9	-4.6
	225	7.9	-2.5
	228	28.6	-2.5
	227	28.6	-4.6
Min	Cent	9.4	-7.1
	224	7.0	-8.5
	225	7.0	-6.2
	228	11.6	-6.2
	227	11.6	-8.5

ELEM	MAT	SEC	LC		NODE	Fxx	Fyy	Fxy	Fmax	Fmin	ANGLE
173	1	1	SX (RS)		Cent	0.1	2.0	1.1	2.5	-0.4	64.83
					225	0.7	2.1	1.1	2.7	0.1	61.44
					226	0.7	2.1	1.1	2.7	0.1	61.36
					229	0.7	2.1	1.1	2.7	0.1	61.19
					228	0.7	2.1	1.1	2.7	0.1	61.26

	NODE	Mxx	Myy	Mxy	Mmax	Mmin	ANGLE
	Cent	0.3	1.0	0.4	1.2	0.1	64.77
	225	0.7	1.9	0.5	2.1	0.5	69.62
	226	0.1	1.8	0.3	1.8	0.1	79.73
	229	0.2	1.0	0.4	1.2	0.1	67.18
	228	1.6	2.1	0.6	2.5	1.2	55.17

	NODE	Vxx	Vyy
	Cent	0.6	4.6
	225	1.2	5.8
	226	1.2	3.5
	229	2.1	3.5
	228	2.1	5.8

LC		NODE	Fxx	Fyy	Fxy	Fmax	Fmin	ANGLE
SY (RS)		Cent	0.1	1.0	0.7	1.4	-0.3	59.83
		225	0.5	1.9	0.7	2.2	0.2	66.66
		226	0.5	1.6	0.7	2.0	0.2	63.19
		229	0.7	1.6	0.7	2.0	0.3	60.44
		228	0.7	1.9	0.7	2.2	0.4	64.40

	NODE	Mxx	Myy	Mxy	Mmax	Mmin	ANGLE
	Cent	0.5	3.0	0.7	3.2	0.3	75.40
	225	0.4	2.4	0.7	2.7	0.2	71.73
	226	0.1	2.6	0.7	2.8	-0.1	74.82
	229	0.3	3.1	0.6	3.2	0.2	77.56
	228	1.5	4.3	0.7	4.4	1.3	76.72

	NODE	Vxx	Vyy
	Cent	1.6	2.7
	225	0.6	3.2
	226	0.6	3.4
	229	2.5	3.4
	228	2.5	3.2

LC		NODE	Fxx	Fyy	Fxy	Fmax	Fmin	ANGLE
RC ENV~1	Max	Cent	0.1	2.4	0.7	2.6	0.0	74.98
		225	0.3	2.9	0.7	3.1	0.2	76.08
		226	0.3	2.2	0.7	2.4	0.2	71.64
		229	0.9	2.2	0.7	2.5	0.8	66.55
		228	0.9	2.9	0.7	3.1	0.9	-56.40
	Min	Cent	-0.2	-1.6	-1.6	-0.1	-2.6	-20.01
		225	-1.0	-1.3	-1.6	-0.1	-2.8	-20.68
		226	-1.0	-2.1	-1.6	-0.2	-3.2	-12.57
		229	-0.5	-2.1	-1.6	-0.1	-3.0	29.77
		228	-0.5	-1.3	-1.6	-0.2	-2.5	28.32

	NODE	Mxx	Myy	Mxy	Mmax	Mmin	ANGLE
Max	Cent	1.7	4.2	2.6	4.7	0.9	68.17
	225	3.9	2.9	2.7	4.9	1.4	23.47
	226	0.8	3.5	2.0	3.8	0.2	72.73
	229	0.1	4.6	2.4	4.9	-0.2	76.15
	228	3.4	6.0	3.1	6.7	2.5	66.42
Min	Cent	0.5	-1.9	-0.1	0.5	-2.3	-2.85
	225	1.4	-3.7	-0.1	1.4	-4.3	2.61
	226	0.1	-1.7	-0.4	0.1	-2.3	2.41
	229	-0.7	-1.6	-0.1	-0.5	-3.0	-5.71
	228	0.1	-2.5	0.1	0.2	-2.5	22.84

	NODE	Vxx	Vyy
Max	Cent	6.0	2.6
	225	6.4	3.2
	226	6.4	2.2
	229	6.2	2.2
	228	6.2	3.2
Min	Cent	1.9	-6.6
	225	2.4	-9.0
	226	2.4	-4.9
	229	0.9	-4.9
	228	0.9	-9.0

LC		NODE	Fxx	Fyy	Fxy	Fmax	Fmin	ANGLE
RC ENV~2	Max	Cent	-0.0	0.8	0.1	1.5	-0.3	-55.49
		225	-0.0	1.5	0.1	2.0	-0.2	-67.81
		226	-0.0	0.1	0.1	0.8	-0.3	-54.04
		229	0.6	0.1	0.1	1.4	-0.3	-37.85
		228	0.6	1.5	0.1	2.2	-0.0	-56.89
	Min	Cent	-0.1	-0.2	-1.1	-0.1	-0.9	18.37
		225	-0.7	-0.2	-1.1	-0.0	-1.2	18.10
		226	-0.7	-0.4	-1.1	-0.1	-1.5	-25.42
		229	-0.1	-0.4	-1.1	-0.1	-0.9	18.64
		228	-0.1	-0.2	-1.1	-0.1	-0.2	30.80

	NODE	Mxx	Myy	Mxy	Mmax	Mmin	ANGLE
Max	Cent	1.2	1.3	1.8	2.5	0.5	43.33
	225	2.8	0.7	1.8	3.5	0.4	23.44
	226	0.6	1.2	1.3	1.9	0.1	54.35
	229	-0.2	1.7	1.6	1.9	-0.4	60.73
	228	2.4	1.8	2.1	3.7	1.0	38.75
Min	Cent	1.0	-0.6	0.6	1.6	-1.4	27.98
	225	2.0	-2.3	0.6	2.2	-2.7	13.35
	226	0.2	-0.8	0.3	0.7	-1.4	28.55
	229	-0.5	-0.5	0.5	0.9	-1.9	43.82
	228	1.6	0.9	0.8	2.5	-0.6	44.96

	NODE	Vxx	Vyy
Max	Cent	4.4	-1.5
	225	4.7	-2.5

		226	4.7	0.3		
		229	4.5	0.3		
		228	4.5	-2.5		
	Min	Cent	3.5	-3.6		
		225	3.3	-6.2		
		226	3.3	-1.8		
		229	3.4	-1.8		
		228	3.4	-6.2		

ELEM	MAT	SEC	LC		NODE	Fxx	Fyy	Fxy	Fmax	Fmin	ANGLE
174	1	1	SX	(RS)	Cent	3.3	1.6	3.2	5.8	-0.9	37.42
					227	2.5	1.8	3.2	5.4	-1.1	42.26
					228	2.5	1.7	3.2	5.3	-1.2	41.56
					230	9.0	1.7	3.2	10.2	0.5	20.67
					13	9.0	1.8	3.2	10.3	0.6	20.98

	NODE	Mxx	Myy	Mxy	Mmax	Mmin	ANGLE
	Cent	7.0	2.2	2.5	8.1	1.1	23.12
	227	9.6	2.1	7.9	14.6	-2.9	32.25
	228	1.8	1.2	1.3	2.8	0.2	38.33
	230	2.8	4.3	1.8	5.5	1.6	56.54
	13	33.1	6.7	7.4	35.0	4.7	14.68

	NODE	Vxx	Vyy
	Cent	16.9	4.6
	227	20.1	0.2
	228	20.1	9.0
	230	54.0	9.0
	13	54.0	0.2

LC		NODE	Fxx	Fyy	Fxy	Fmax	Fmin	ANGLE
SY	(RS)	Cent	0.9	5.0	2.7	6.4	-0.5	63.77
		227	1.1	11.4	2.7	12.0	0.4	76.10
		228	1.1	1.8	2.7	4.2	-1.3	48.50
		230	2.7	1.8	2.7	5.0	-0.5	40.10
		13	2.7	11.4	2.7	12.1	1.9	74.01

	NODE	Mxx	Myy	Mxy	Mmax	Mmin	ANGLE
	Cent	2.7	7.9	1.8	8.5	2.1	72.42
	227	3.6	5.3	2.5	7.1	1.7	54.09
	228	0.8	4.0	0.8	4.2	0.6	76.23
	230	1.2	4.0	4.8	7.6	-2.3	53.01
	13	9.8	25.5	5.0	26.9	8.3	73.65

	NODE	Vxx	Vyy
	Cent	5.5	11.9
	227	7.1	37.6
	228	7.1	14.0
	230	13.1	14.0
	13	13.1	37.6

LC		NODE	Fxx	Fyy	Fxy	Fmax	Fmin	ANGLE
RC ENV~1	Max	Cent	4.5	5.5	2.0	7.3	1.5	-33.90
		227	1.3	12.2	2.0	12.4	-0.1	83.35
		228	1.3	1.9	2.0	3.6	-0.4	49.18
		230	12.5	1.9	2.0	13.9	1.5	-17.43
		13	12.5	12.2	2.0	14.0	5.9	-19.19
	Min	Cent	-2.1	-4.5	-4.5	0.0	-6.7	52.97
		227	-3.8	-10.5	-4.5	-0.7	-12.1	-21.90
		228	-3.8	-1.6	-4.5	-0.1	-7.2	-76.07
		230	-5.5	-1.6	-4.5	0.2	-8.4	70.76
		13	-5.5	-10.5	-4.5	-0.5	-11.8	61.52

	NODE	Mxx	Myy	Mxy	Mmax	Mmin	ANGLE
	Max	Cent	10.5	12.2	6.8	14.3	4.1	62.93
		227	24.8	6.5	13.1	30.7	2.8	24.26
		228	4.7	7.7	3.3	8.4	2.8	60.85
		230	1.4	6.6	5.0	9.1	0.7	61.29

		13	34.6	35.5	11.3	39.9	15.4	25.56
	Min	Cent	-3.4	-3.6	-0.2	0.9	-3.6	5.99
		227	1.8	-4.0	-3.7	4.4	-4.8	-35.02
		228	0.8	-0.3	-0.4	1.8	-0.3	0.25
		230	-5.1	-1.9	-4.5	-1.2	-6.6	-63.28
		13	-31.5	-15.4	-3.8	-8.0	-31.9	-10.41

		NODE	Vxx	Vyy
	Max	Cent	26.7	2.1
		227	39.6	16.9
		228	39.6	15.1
		230	56.5	15.1
		13	56.5	16.9
	Min	Cent	-7.2	-23.3
		227	-3.2	-58.4
		228	-3.2	-13.0
		230	-51.5	-13.0
		13	-51.5	-58.4

LC		NODE	Fxx	Fyy	Fxy	Fmax	Fmin	ANGLE
RC ENV~2	Max	Cent	3.1	0.7	0.2	5.2	-0.3	-34.23
		227	-0.1	1.3	0.2	2.9	-0.5	-61.21
		228	-0.1	0.2	0.2	2.1	-0.3	-57.17
		230	8.8	0.2	0.2	9.8	-0.1	-17.53
		13	8.8	1.3	0.2	9.9	0.4	-19.43
	Min	Cent	-0.3	-0.2	-3.0	-0.0	-1.4	55.23
		227	-2.7	-0.4	-3.0	-0.2	-4.3	-47.80
		228	-2.7	-0.1	-3.0	0.1	-4.6	-66.37
		230	-0.6	-0.1	-3.0	0.1	-0.8	70.79
		13	-0.6	-0.4	-3.0	-0.2	-0.7	57.01

		NODE	Mxx	Myy	Mxy	Mmax	Mmin	ANGLE
	Max	Cent	6.0	5.8	4.7	9.2	3.0	54.96
		227	18.0	1.5	9.3	22.1	-0.2	23.98
		228	3.4	5.2	2.3	6.1	2.2	62.02
		230	-0.5	2.9	1.4	3.1	-0.8	74.12
		13	12.0	15.2	8.0	17.3	10.5	72.29
	Min	Cent	2.4	4.3	2.0	6.2	-1.0	48.08
		227	9.0	-0.7	2.4	9.6	-3.1	13.58
		228	2.6	2.3	0.8	4.1	0.6	59.06
		230	-3.6	1.8	0.2	1.9	-3.6	80.87
		13	-7.8	10.0	1.8	11.4	-10.3	68.71

		NODE	Vxx	Vyy
	Max	Cent	15.7	-9.8
		227	28.6	-20.3
		228	28.6	3.4
		230	19.3	3.4
		13	19.3	-20.3
	Min	Cent	7.6	-16.6
		227	11.6	-35.6
		228	11.6	-2.1
		230	-12.2	-2.1
		13	-12.2	-35.6

ELEM	MAT	SEC	LC		NODE	Fxx	Fyy	Fxy	Fmax	Fmin	ANGLE
175	1	1	SX (RS)		Cent	0.7	2.2	0.7	2.5	0.5	69.37
					228	0.3	1.8	0.7	2.1	0.1	68.96
					229	0.3	2.7	0.7	2.8	0.2	75.19
					23	1.1	2.7	0.7	2.9	0.9	69.88
					230	1.1	1.8	0.7	2.2	0.7	58.99

	NODE	Mxx	Myy	Mxy	Mmax	Mmin	ANGLE
	Cent	0.9	2.0	0.7	2.3	0.6	65.66
	228	1.1	1.2	0.5	1.7	0.6	49.21
	229	0.5	2.5	0.5	2.6	0.4	76.98
	23	0.4	2.1	0.7	2.3	0.2	71.09
	230	2.4	4.2	0.7	4.5	2.2	70.58

	NODE	Vxx	Vyy

Cent	3.2	4.7	
228	2.1	9.0	
229	2.1	1.8	
23	4.3	1.8	
230	4.3	9.0	

LC		NODE	Fxx	Fyy	Fxy	Fmax	Fmin	ANGLE
SY (RS)		Cent	0.3	1.6	0.4	1.7	0.2	76.05
		228	0.5	1.8	0.4	1.9	0.4	75.74
		229	0.5	2.0	0.4	2.1	0.5	77.14
		23	0.3	2.0	0.4	2.1	0.2	78.68
		230	0.3	1.8	0.4	1.9	0.2	77.58

	NODE	Mxx	Myy	Mxy	Mmax	Mmin	ANGLE
	Cent	0.4	2.2	0.5	2.4	0.2	75.65
	228	1.5	4.3	0.7	4.5	1.3	76.20
	229	0.3	2.4	0.8	2.7	0.0	71.01
	23	0.5	4.3	0.6	4.4	0.4	81.76
	230	1.1	4.0	0.6	4.1	1.0	78.58

	NODE	Vxx	Vyy
	Cent	1.6	5.9
	228	2.5	14.0
	229	2.5	3.5
	23	1.3	3.5
	230	1.3	14.0

LC		NODE	Fxx	Fyy	Fxy	Fmax	Fmin	ANGLE
RC ENV~1	Max	Cent	0.9	1.9	0.4	2.1	0.8	70.64
		228	0.6	1.8	0.4	1.9	0.6	75.19
		229	0.6	2.1	0.4	2.2	0.6	77.38
		23	1.5	2.1	0.4	2.3	1.3	63.48
		230	1.5	1.8	0.4	2.1	1.2	55.66
	Min	Cent	-0.5	-2.5	-0.9	-0.1	-2.9	-21.22
		228	-0.5	-1.8	-0.9	-0.2	-2.2	-21.08
		229	-0.5	-3.2	-0.9	-0.3	-3.5	-15.19
		23	-0.7	-3.2	-0.9	-0.4	-3.5	-18.10
		230	-0.7	-1.8	-0.9	-0.2	-2.3	-29.70

	NODE	Mxx	Myy	Mxy	Mmax	Mmin	ANGLE
Max	Cent	1.6	4.8	1.7	4.9	1.3	79.99
	228	3.7	7.9	2.3	8.3	3.2	74.93
	229	0.3	4.0	1.8	4.2	0.1	75.11
	23	0.3	6.6	1.2	6.6	0.3	85.75
	230	3.4	7.0	1.8	7.2	3.2	77.44
Min	Cent	-0.3	0.3	-0.5	0.6	-0.5	-45.97
	228	0.6	-0.8	-0.2	0.6	-0.8	-9.21
	229	-0.7	-1.0	-0.5	-0.6	-1.3	-30.43
	23	-0.6	-2.1	-0.7	-0.4	-2.3	-21.75
	230	-1.5	-1.4	-0.6	-0.9	-2.0	-47.46

	NODE	Vxx	Vyy
Max	Cent	5.8	5.8
	228	6.2	15.1
	229	6.2	2.1
	23	6.1	2.1
	230	6.1	15.1
Min	Cent	-0.6	-6.1
	228	0.9	-13.0
	229	0.9	-4.9
	23	-2.5	-4.9
	230	-2.5	-13.0

LC		NODE	Fxx	Fyy	Fxy	Fmax	Fmin	ANGLE
RC ENV~2	Max	Cent	0.6	-0.1	0.0	0.9	-0.1	-19.86
		228	0.2	0.0	0.0	0.7	-0.1	-33.16
		229	0.2	-0.3	0.0	0.4	-0.3	-18.30
		23	1.0	-0.3	0.0	1.2	-0.3	-13.46
		230	1.0	0.0	0.0	1.3	-0.1	-21.65

Min	Cent	-0.1	-1.0	-0.6	-0.1	-1.3	30.64
	228	-0.1	-0.4	-0.6	0.0	-0.8	-48.74
	229	-0.1	-1.7	-0.6	-0.1	-1.9	5.01
	23	-0.1	-1.7	-0.6	-0.1	-1.8	4.95
	230	-0.1	-0.4	-0.6	0.0	-0.6	83.82

	NODE	Mxx	Myy	Mxy	Mmax	Mmin	ANGLE
Max	Cent	1.0	3.0	1.1	3.2	0.7	77.03
	228	2.7	5.1	1.6	5.6	2.0	69.18
	229	-0.0	1.7	1.2	2.1	-0.2	63.01
	23	-0.2	2.6	0.8	2.6	-0.2	87.67
	230	1.7	3.4	1.1	3.7	1.5	66.81
Min	Cent	0.5	2.0	0.1	2.4	0.1	67.46
	228	2.1	2.2	0.5	3.3	1.0	41.83
	229	-0.4	1.2	0.3	1.5	-0.8	69.01
	23	-0.4	1.4	-0.2	1.7	-0.7	69.36
	230	0.2	2.4	0.1	2.6	0.1	69.82

	NODE	Vxx	Vyy
Max	Cent	3.9	1.2
	228	4.5	3.4
	229	4.5	-0.1
	23	3.2	-0.1
	230	3.2	3.4
Min	Cent	2.3	-1.7
	228	3.4	-2.1
	229	3.4	-1.9
	23	0.7	-1.9
	230	0.7	-2.1

ELEM	MAT	SEC	LC		NODE	Fxx	Fyy	Fxy	Fmax	Fmin	ANGLE
176	1	1	SX	(RS)	Cent	0.7	2.2	0.6	2.5	0.5	70.40
					230	1.1	1.8	0.6	2.1	0.7	59.47
					23	1.1	2.7	0.6	2.9	0.9	71.26
					233	0.3	2.7	0.6	2.9	0.2	76.18
					232	0.3	1.8	0.6	2.0	0.1	69.60

	NODE	Mxx	Myy	Mxy	Mmax	Mmin	ANGLE
	Cent	0.9	2.1	0.7	2.4	0.6	64.52
	230	2.4	4.1	0.7	4.4	2.2	70.54
	23	0.4	2.8	0.7	3.0	0.2	75.87
	233	0.4	1.8	0.7	2.1	0.1	66.25
	232	1.1	1.4	0.7	2.0	0.5	50.22

	NODE	Vxx	Vyy
	Cent	3.2	5.0
	230	4.3	8.8
	23	4.3	2.7
	233	2.2	2.7
	232	2.2	8.8

LC		NODE	Fxx	Fyy	Fxy	Fmax	Fmin	ANGLE
SY	(RS)	Cent	0.3	1.9	0.1	1.9	0.3	86.99
		230	0.3	2.1	0.1	2.1	0.3	87.38
		23	0.3	2.1	0.1	2.1	0.3	87.32
		233	0.5	2.1	0.1	2.1	0.5	86.87
		232	0.5	2.1	0.1	2.1	0.5	86.96

	NODE	Mxx	Myy	Mxy	Mmax	Mmin	ANGLE
	Cent	0.3	1.9	0.5	2.1	0.2	73.13
	230	1.3	6.7	0.7	6.8	1.2	83.07
	23	0.5	1.5	0.6	1.8	0.2	64.79
	233	0.4	2.0	0.7	2.3	0.1	69.34
	232	1.3	1.7	0.7	2.2	0.7	53.39

	NODE	Vxx	Vyy
	Cent	1.4	5.9
	230	1.3	14.4
	23	1.3	2.7

		233	2.1	2.7
		232	2.1	14.4

LC		NODE	Fxx	Fyy	Fxy	Fmax	Fmin	ANGLE
RC ENV~1	Max	Cent	1.0	1.9	0.9	2.5	0.4	59.65
		230	1.5	2.1	0.9	2.5	0.7	49.50
		23	1.5	2.1	0.9	2.8	0.9	55.29
		233	0.6	2.1	0.9	2.5	0.5	67.10
		232	0.6	2.1	0.9	2.2	0.5	63.53
	Min	Cent	-0.5	-2.5	-0.4	-0.4	-2.6	-9.49
		230	-0.7	-2.2	-0.4	-0.6	-2.2	-16.41
		23	-0.7	-3.3	-0.4	-0.7	-3.3	-7.65
		233	-0.5	-3.3	-0.4	-0.4	-3.3	4.74
		232	-0.5	-2.2	-0.4	-0.4	-2.2	6.11

		NODE	Mxx	Myy	Mxy	Mmax	Mmin	ANGLE
	Max	Cent	1.6	4.7	0.8	4.8	1.5	83.81
		230	3.4	9.6	1.0	9.6	3.3	87.28
		23	0.3	4.9	1.2	5.0	0.2	83.39
		233	0.2	3.9	0.4	3.9	0.2	86.30
		232	3.5	8.1	0.2	8.2	3.5	-79.16
	Min	Cent	-0.3	0.5	-1.1	1.3	-1.0	-55.15
		230	-1.5	-3.8	-1.0	-0.3	-4.1	-48.47
		23	-0.7	-0.8	-0.8	0.1	-1.5	-41.61
		233	-0.8	-0.2	-1.2	0.9	-1.6	-49.55
		232	0.7	2.0	-1.4	2.9	-0.2	-56.82

		NODE	Vxx	Vyy
	Max	Cent	5.8	5.6
		230	6.1	13.3
		23	6.1	3.2
		233	6.0	3.2
		232	6.0	13.3
	Min	Cent	-0.6	-6.3
		230	-2.5	-15.5
		23	-2.5	-2.3
		233	1.2	-2.3
		232	1.2	-15.5

LC		NODE	Fxx	Fyy	Fxy	Fmax	Fmin	ANGLE
RC ENV~2	Max	Cent	0.7	-0.2	0.6	0.9	-0.2	19.50
		230	1.0	0.0	0.6	1.3	-0.1	20.70
		23	1.0	-0.3	0.6	1.2	-0.3	13.83
		233	0.3	-0.3	0.6	0.5	-0.3	18.42
		232	0.3	0.0	0.6	0.7	-0.1	30.36
	Min	Cent	-0.1	-1.1	-0.0	-0.1	-1.3	-15.67
		230	-0.1	-0.5	-0.0	-0.0	-0.7	-75.02
		23	-0.1	-1.6	-0.0	-0.1	-1.8	-7.44
		233	-0.1	-1.6	-0.0	-0.1	-1.8	-5.63
		232	-0.1	-0.5	-0.0	-0.0	-0.9	-57.82

		NODE	Mxx	Myy	Mxy	Mmax	Mmin	ANGLE
	Max	Cent	1.0	3.4	0.4	3.5	0.9	-86.19
		230	1.8	3.9	0.6	3.9	1.8	-84.88
		23	-0.1	2.7	0.8	2.8	-0.2	77.36
		233	-0.1	2.2	0.2	2.4	-0.2	-76.95
		232	2.6	5.8	-0.0	6.0	2.6	-77.97
	Min	Cent	0.4	2.6	-0.5	2.7	0.4	-80.71
		230	0.3	2.6	-0.4	2.7	0.3	80.99
		23	-0.4	2.0	-0.2	2.0	-0.4	-86.42
		233	-0.5	1.4	-0.6	1.4	-0.6	84.15
		232	2.0	3.2	-0.9	3.4	1.7	-66.58

		NODE	Vxx	Vyy
	Max	Cent	3.8	0.9
		230	3.2	1.0
		23	3.2	2.1
		233	4.4	2.1
		232	4.4	1.0
	Min	Cent	2.2	-1.5
		230	0.7	-4.3

					23	0.7	0.2				
					233	3.3	0.2				
					232	3.3	-4.3				

ELEM	MAT	SEC	LC		NODE	Fxx	Fyy	Fxy	Fmax	Fmin	ANGLE
177	1	1	SX	(RS)	Cent	1.4	1.4	1.0	2.4	0.4	45.90
					231	2.4	1.0	1.0	3.0	0.5	27.82
					232	2.4	1.8	1.0	3.2	1.1	36.93
					235	0.4	1.8	1.0	2.4	-0.2	62.96
					234	0.4	1.0	1.0	1.8	-0.4	54.13

	NODE	Mxx	Myy	Mxy	Mmax	Mmin	ANGLE
	Cent	2.3	1.0	1.6	3.4	-0.0	34.04
	231	9.6	2.2	1.0	9.7	2.1	7.38
	232	2.3	2.1	1.9	4.1	0.4	43.28
	235	1.0	2.0	2.0	3.6	-0.6	51.65
	234	1.1	0.8	1.1	2.1	-0.2	41.93

	NODE	Vxx	Vyy
	Cent	10.3	2.8
	231	20.1	0.2
	232	20.1	5.5
	235	0.5	5.5
	234	0.5	0.2

LC		NODE	Fxx	Fyy	Fxy	Fmax	Fmin	ANGLE
SY	(RS)	Cent	0.9	2.5	0.2	2.5	0.9	83.59
		231	1.5	3.4	0.2	3.4	1.4	84.77
		232	1.5	1.7	0.2	1.8	1.4	62.84
		235	0.4	1.7	0.2	1.7	0.4	82.17
		234	0.4	3.4	0.2	3.4	0.4	86.55

	NODE	Mxx	Myy	Mxy	Mmax	Mmin	ANGLE
	Cent	0.9	1.1	0.5	1.5	0.5	52.76
	231	3.2	2.5	0.5	3.5	2.2	28.96
	232	1.0	1.9	0.4	2.1	0.9	68.06
	235	0.7	0.6	0.4	1.1	0.2	42.85
	234	0.6	1.1	0.5	1.4	0.3	57.62

	NODE	Vxx	Vyy
	Cent	3.5	3.9
	231	6.9	5.4
	232	6.9	2.8
	235	0.2	2.8
	234	0.2	5.4

LC		NODE	Fxx	Fyy	Fxy	Fmax	Fmin	ANGLE
RC ENV~1	Max	Cent	0.6	3.3	1.7	3.4	0.1	77.89
		231	1.3	4.1	1.7	4.2	0.2	80.13
		232	1.3	2.7	1.7	3.6	0.3	57.22
		235	0.2	2.7	1.7	3.4	-0.0	64.95
		234	0.2	4.1	1.7	4.2	0.1	80.39
	Min	Cent	-2.3	-1.7	-0.5	-1.4	-2.9	41.31
		231	-3.9	-2.7	-0.5	-2.3	-4.3	43.02
		232	-3.9	-1.0	-0.5	-0.9	-4.3	-79.09
		235	-0.7	-1.0	-0.5	-0.5	-1.5	36.63
		234	-0.7	-2.7	-0.5	-0.6	-2.7	9.23

	NODE	Mxx	Myy	Mxy	Mmax	Mmin	ANGLE
Max	Cent	10.9	3.9	0.7	11.4	3.8	-13.86
	231	25.9	8.5	0.9	25.9	8.5	-1.43
	232	4.5	4.2	0.4	6.2	3.9	-47.73
	235	4.3	2.7	0.8	6.1	2.2	-33.54
	234	11.6	2.3	1.2	11.7	2.1	4.69
Min	Cent	3.3	0.6	-2.5	4.8	-0.8	-31.41
	231	2.2	1.3	-1.4	3.3	0.5	-38.73
	232	-0.2	-0.0	-3.3	2.5	-3.4	-37.79
	235	1.3	-1.2	-3.2	2.6	-3.4	-32.04

234	5.1	-0.7	-1.3	5.3	-0.8	-12.46

	NODE	Vxx	Vyy
Max	Cent	25.9	7.5
	231	40.0	9.8
	232	40.0	8.2
	235	13.7	8.2
	234	13.7	9.8
Min	Cent	1.6	-0.4
	231	-3.3	-1.0
	232	-3.3	-2.8
	235	6.5	-2.8
	234	6.5	-1.0

LC		NODE	Fxx	Fyy	Fxy	Fmax	Fmin	ANGLE
RC ENV~2	Max	Cent	-0.2	1.4	1.2	1.8	-0.2	71.10
		231	-0.2	1.2	1.2	1.6	-0.2	74.71
		232	-0.2	1.6	1.2	1.9	-0.2	75.67
		235	-0.2	1.6	1.2	2.1	-0.2	65.63
		234	-0.2	1.2	1.2	1.8	-0.2	63.43
	Min	Cent	-1.6	0.3	0.0	0.3	-2.0	85.57
		231	-2.7	0.5	0.0	0.5	-3.1	86.80
		232	-2.7	0.1	0.0	0.1	-3.0	82.19
		235	-0.5	0.1	0.0	0.1	-1.0	82.83
		234	-0.5	0.5	0.0	0.5	-1.1	86.92

	NODE	Mxx	Myy	Mxy	Mmax	Mmin	ANGLE
Max	Cent	8.0	2.8	-0.0	8.3	2.7	-14.17
	231	18.8	6.1	0.5	18.8	6.1	-1.78
	232	3.0	2.7	-0.5	4.6	2.2	-47.47
	235	3.2	1.7	-0.3	4.5	1.4	-33.16
	234	8.5	1.5	0.7	8.5	1.4	3.73
Min	Cent	5.3	1.7	-1.4	5.3	1.5	-4.79
	231	9.6	3.3	-0.5	9.6	3.3	-0.42
	232	2.1	2.1	-2.3	3.2	0.0	-32.50
	235	2.0	0.4	-2.0	2.2	-0.3	-15.29
	234	6.0	0.3	-0.3	6.0	0.3	-1.87

	NODE	Vxx	Vyy
Max	Cent	18.7	4.8
	231	28.8	6.5
	232	28.8	3.9
	235	9.9	3.9
	234	9.9	6.5
Min	Cent	10.1	2.9
	231	12.0	3.5
	232	12.0	1.3
	235	6.9	1.3
	234	6.9	3.5

ELEM	MAT	SEC	LC		NODE	Fxx	Fyy	Fxy	Fmax	Fmin	ANGLE
178	1	1	SX	(RS)	Cent	0.1	1.9	1.1	2.4	-0.4	64.92
					232	0.7	2.0	1.1	2.6	0.1	60.42
					233	0.7	2.2	1.1	2.8	0.1	62.53
					236	0.7	2.2	1.1	2.8	0.1	62.70
					235	0.7	2.0	1.1	2.6	0.0	60.61

	NODE	Mxx	Myy	Mxy	Mmax	Mmin	ANGLE
	Cent	0.4	1.1	1.1	1.8	-0.4	54.33
	232	1.6	2.0	1.1	3.0	0.6	49.32
	233	0.4	2.3	1.0	2.7	-0.0	67.13
	236	0.1	1.3	1.0	1.9	-0.5	60.44
	235	0.7	1.9	1.1	2.6	0.0	58.89

	NODE	Vxx	Vyy
	Cent	0.7	5.0
	232	2.2	5.5
	233	2.2	5.3
	236	1.1	5.3
	235	1.1	5.5

LC		NODE	Fxx	Fyy	Fxy	Fmax	Fmin	ANGLE
SY (RS)		Cent	0.1	1.4	0.6	1.6	-0.1	68.87
		232	0.7	1.8	0.6	2.1	0.5	66.98
		233	0.7	2.4	0.6	2.5	0.5	72.54
		236	0.5	2.4	0.6	2.5	0.3	74.14
		235	0.5	1.8	0.6	2.0	0.3	69.48

		NODE	Mxx	Myy	Mxy	Mmax	Mmin	ANGLE
		Cent	0.4	1.1	0.4	1.3	0.2	68.68
		232	1.3	2.1	0.2	2.1	1.3	75.53
		233	0.3	1.1	0.3	1.2	0.2	71.97
		236	0.1	1.2	0.5	1.3	-0.1	69.53
		235	0.2	0.6	0.3	0.8	0.0	59.29

		NODE	Vxx	Vyy
		Cent	1.3	1.1
		232	2.1	2.8
		233	2.1	1.0
		236	0.4	1.0
		235	0.4	2.8

LC		NODE	Fxx	Fyy	Fxy	Fmax	Fmin	ANGLE
RC ENV~1	Max	Cent	0.1	2.4	1.6	3.2	-0.3	63.44
		232	1.0	2.9	1.6	3.8	0.5	61.34
		233	1.0	2.4	1.6	3.3	0.4	56.36
		236	0.3	2.4	1.6	3.1	-0.2	60.66
		235	0.3	2.9	1.6	3.7	-0.2	64.86
	Min	Cent	-0.2	-1.4	-0.6	-0.2	-1.7	-7.20
		232	-0.5	-1.0	-0.6	-0.5	-1.4	-12.67
		233	-0.5	-2.3	-0.6	-0.5	-2.4	-2.86
		236	-1.1	-2.3	-0.6	-0.8	-2.4	-3.55
		235	-1.1	-1.0	-0.6	-0.8	-1.7	-40.62

		NODE	Mxx	Myy	Mxy	Mmax	Mmin	ANGLE
	Max	Cent	1.5	2.8	0.2	3.8	1.5	-56.77
		232	3.3	4.1	0.1	5.0	3.3	-51.49
		233	0.1	3.7	0.2	3.7	0.1	86.98
		236	0.5	2.8	0.4	3.2	0.4	-69.65
		235	3.8	2.6	0.3	4.8	2.4	-31.17
	Min	Cent	0.6	0.2	-1.9	1.6	-1.5	-40.91
		232	0.0	-0.1	-2.2	1.4	-2.1	-39.79
		233	-0.7	-0.8	-1.7	1.0	-2.5	-43.56
		236	0.1	0.1	-1.6	1.1	-1.5	86.87
		235	1.3	-1.2	-2.0	2.4	-2.3	-27.23

		NODE	Vxx	Vyy
	Max	Cent	5.9	6.5
		232	6.0	8.2
		233	6.0	5.6
		236	6.4	5.6
		235	6.4	8.2
	Min	Cent	2.1	-3.5
		232	1.2	-2.8
		233	1.2	-5.0
		236	2.3	-5.0
		235	2.3	-2.8

LC		NODE	Fxx	Fyy	Fxy	Fmax	Fmin	ANGLE
RC ENV~2	Max	Cent	-0.0	0.9	1.2	1.7	-0.1	56.37
		232	0.7	1.9	1.2	2.6	-0.0	59.14
		233	0.7	0.1	1.2	1.5	-0.3	36.44
		236	-0.1	0.1	1.2	0.8	-0.4	53.36
		235	-0.1	1.9	1.2	2.3	-0.1	69.45
	Min	Cent	-0.1	-0.1	-0.0	-0.1	-0.9	-0.61
		232	-0.1	0.1	-0.0	0.1	-0.1	-89.77
		233	-0.1	-0.5	-0.0	-0.1	-1.1	-0.12
		236	-0.8	-0.5	-0.0	-0.1	-1.7	28.17
		235	-0.8	0.1	-0.0	0.1	-1.2	-89.80

	NODE	Mxx	Myy	Mxy	Mmax	Mmin	ANGLE
Max	Cent	1.1	2.0	-0.2	2.8	1.1	-55.95
	232	2.3	2.5	-0.4	3.7	2.0	-51.19
	233	-0.2	2.5	-0.2	2.5	-0.2	-80.51
	236	0.3	2.1	0.0	2.4	0.2	-68.76
	235	2.8	1.6	-0.3	3.5	1.5	-30.89
Min	Cent	0.9	1.3	-1.2	1.7	0.1	-66.10
	232	1.6	2.0	-1.5	2.6	0.4	-54.30
	233	-0.5	1.3	-1.1	1.7	-0.9	-68.10
	236	0.1	0.8	-0.9	0.9	-0.1	-84.18
	235	1.9	0.4	-1.3	2.1	-0.0	-16.46

	NODE	Vxx	Vyy
Max	Cent	4.4	2.6
	232	4.4	3.9
	233	4.4	2.3
	236	4.7	2.3
	235	4.7	3.9
Min	Cent	3.4	1.3
	232	3.3	1.3
	233	3.3	0.1
	236	3.3	0.1
	235	3.3	1.3

ELEM	MAT	SEC	LC		NODE	Fxx	Fyy	Fxy	Fmax	Fmin	ANGLE
179	1	1	SX	(RS)	Cent	0.3	1.2	0.6	1.5	0.0	64.16
					234	0.4	0.9	0.6	1.3	-0.0	57.48
					235	0.4	1.6	0.6	1.8	0.1	68.01
					238	0.3	1.6	0.6	1.8	0.0	69.11
					237	0.3	0.9	0.6	1.3	-0.1	59.38

	NODE	Mxx	Myy	Mxy	Mmax	Mmin	ANGLE
	Cent	1.4	1.3	1.6	3.0	-0.3	44.39
	234	1.1	0.9	1.8	2.8	-0.8	43.57
	235	1.0	1.6	1.6	2.9	-0.3	50.67
	238	1.2	1.8	1.5	3.0	-0.0	50.50
	237	2.3	1.0	1.7	3.5	-0.1	34.47

	NODE	Vxx	Vyy
	Cent	1.4	0.2
	234	0.5	0.3
	235	0.5	0.6
	238	2.3	0.6
	237	2.3	0.3

LC		NODE	Fxx	Fyy	Fxy	Fmax	Fmin	ANGLE
SY	(RS)	Cent	0.4	1.3	0.3	1.4	0.3	72.02
		234	0.7	1.5	0.3	1.6	0.6	69.22
		235	0.7	1.3	0.3	1.4	0.6	65.12
		238	0.1	1.3	0.3	1.4	0.0	75.19
		237	0.1	1.5	0.3	1.5	0.1	76.95

	NODE	Mxx	Myy	Mxy	Mmax	Mmin	ANGLE
	Cent	0.4	1.0	0.3	1.1	0.3	67.97
	234	0.7	0.8	0.3	1.1	0.5	50.16
	235	0.7	0.8	0.4	1.1	0.3	48.45
	238	0.1	1.4	0.3	1.5	0.0	76.38
	237	0.2	1.6	0.2	1.6	0.2	81.89

	NODE	Vxx	Vyy
	Cent	0.1	2.3
	234	0.2	2.1
	235	0.2	2.4
	238	0.3	2.4
	237	0.3	2.1

LC	NODE	Fxx	Fyy	Fxy	Fmax	Fmin	ANGLE

LC		NODE	Fxx	Fyy	Fxy	Fmax	Fmin	ANGLE
RC ENV~1	Max	Cent	0.2	2.1	1.1	2.4	-0.0	67.98
		234	0.5	2.3	1.1	2.5	0.2	71.38
		235	0.5	2.3	1.1	2.7	0.2	69.94
		238	0.0	2.3	1.1	2.7	-0.3	70.34
		237	0.0	2.3	1.1	2.4	-0.3	74.96
	Min	Cent	-0.7	-0.5	-0.2	-0.5	-1.1	76.89
		234	-1.0	-0.7	-0.2	-0.7	-1.1	84.42
		235	-1.0	-0.8	-0.2	-0.5	-1.1	86.13
		238	-0.6	-0.8	-0.2	-0.4	-1.0	-27.42
		237	-0.6	-0.7	-0.2	-0.4	-1.0	6.13

		NODE	Mxx	Myy	Mxy	Mmax	Mmin	ANGLE
	Max	Cent	7.9	2.2	1.1	7.9	2.2	-2.94
		234	11.9	3.5	1.2	12.0	3.5	-2.91
		235	4.4	2.5	0.9	5.1	2.4	-27.29
		238	3.5	1.4	1.0	3.7	1.0	-14.39
		237	12.0	2.2	1.2	12.0	2.2	-1.24
	Min	Cent	2.8	-0.9	-2.1	3.7	-1.8	-24.93
		234	5.2	0.3	-2.4	5.7	-0.7	-9.18
		235	1.4	-0.6	-2.2	2.2	-2.1	-27.16
		238	0.6	-2.2	-2.0	1.6	-3.2	-27.17
		237	3.7	-1.5	-2.1	4.6	-1.7	-21.05

		NODE	Vxx	Vyy
	Max	Cent	14.4	4.7
		234	13.7	4.3
		235	13.7	5.2
		238	15.2	5.2
		237	15.2	4.3
	Min	Cent	5.8	-0.1
		234	6.5	-0.2
		235	6.5	-0.0
		238	5.2	-0.0
		237	5.2	-0.2

LC		NODE	Fxx	Fyy	Fxy	Fmax	Fmin	ANGLE
RC ENV~2	Max	Cent	-0.2	1.3	0.8	1.6	-0.2	70.00
		234	-0.2	1.3	0.8	1.6	-0.2	70.21
		235	-0.2	1.4	0.8	1.7	-0.2	70.70
		238	-0.2	1.4	0.8	1.7	-0.2	69.94
		237	-0.2	1.3	0.8	1.6	-0.2	69.40
	Min	Cent	-0.5	0.3	0.1	0.3	-0.8	80.43
		234	-0.5	0.5	0.1	0.5	-0.8	82.81
		235	-0.5	0.1	0.1	0.2	-0.8	76.50
		238	-0.4	0.1	0.1	0.2	-0.7	75.87
		237	-0.4	0.5	0.1	0.5	-0.7	82.63

		NODE	Mxx	Myy	Mxy	Mmax	Mmin	ANGLE
	Max	Cent	5.8	1.5	0.1	5.8	1.5	-3.97
		234	8.7	2.4	0.1	8.7	2.4	-3.66
		235	3.2	1.8	0.0	3.8	1.7	-27.10
		238	2.6	0.5	0.1	2.7	0.5	-14.51
		237	8.7	1.4	0.1	8.7	1.4	-1.77
	Min	Cent	4.0	0.3	-0.9	4.1	0.2	-8.11
		234	6.2	1.1	-1.1	6.2	1.0	-6.36
		235	2.1	0.7	-1.1	2.1	0.5	-9.24
		238	1.6	-1.0	-0.9	1.6	-1.2	-7.30
		237	5.9	-0.0	-0.9	5.9	-0.1	-4.22

		NODE	Vxx	Vyy
	Max	Cent	10.4	3.5
		234	9.9	3.1
		235	9.9	3.8
		238	10.9	3.8
		237	10.9	3.1
	Min	Cent	7.1	1.7
		234	6.9	1.5
		235	6.9	1.8
		238	7.3	1.8
		237	7.3	1.5

ELEM	MAT	SEC	LC		NODE	Fxx	Fyy	Fxy	Fmax	Fmin	ANGLE
180	1	1	SX	(RS)	Cent	0.2	2.2	0.3	2.3	0.2	81.42
					235	0.5	1.6	0.3	1.6	0.4	74.88
					236	0.5	3.0	0.3	3.0	0.5	82.96
					239	0.1	3.0	0.3	3.0	0.1	83.91
					238	0.1	1.6	0.3	1.6	0.0	78.53

		NODE	Mxx	Myy	Mxy	Mmax	Mmin	ANGLE
		Cent	0.4	1.6	1.3	2.5	-0.5	57.38
		235	0.6	1.5	1.3	2.4	-0.3	54.64
		236	0.4	2.2	1.3	2.8	-0.3	63.17
		239	0.3	2.3	1.3	2.9	-0.3	63.46
		238	0.8	1.7	1.3	2.7	-0.1	54.48

		NODE	Vxx	Vyy
		Cent	1.2	2.6
		235	1.1	0.6
		236	1.1	5.6
		239	1.2	5.6
		238	1.2	0.6

LC		NODE	Fxx	Fyy	Fxy	Fmax	Fmin	ANGLE
SY	(RS)	Cent	0.3	1.3	0.2	1.3	0.2	80.48
		235	0.5	1.3	0.2	1.3	0.5	77.97
		236	0.5	1.5	0.2	1.5	0.5	80.18
		239	0.0	1.5	0.2	1.5	-0.0	83.34
		238	0.0	1.3	0.2	1.3	-0.0	82.35

		NODE	Mxx	Myy	Mxy	Mmax	Mmin	ANGLE
		Cent	0.1	1.0	0.3	1.1	-0.0	70.38
		235	0.2	0.8	0.4	1.0	0.0	61.95
		236	0.1	0.9	0.3	1.0	-0.1	70.48
		239	0.1	1.1	0.3	1.2	0.0	75.98
		238	0.1	1.4	0.3	1.5	0.0	76.16

		NODE	Vxx	Vyy
		Cent	0.3	1.8
		235	0.4	2.4
		236	0.4	1.3
		239	0.2	1.3
		238	0.2	2.4

LC		NODE	Fxx	Fyy	Fxy	Fmax	Fmin	ANGLE
RC ENV~1	Max	Cent	0.1	3.1	0.5	3.2	0.1	81.40
		235	0.3	2.3	0.5	2.4	0.2	77.90
		236	0.3	4.0	0.5	4.0	0.2	82.92
		239	0.1	4.0	0.5	4.0	-0.0	83.23
		238	0.1	2.3	0.5	2.4	-0.0	78.75
	Min	Cent	-0.4	-1.4	-0.2	-0.4	-1.4	-74.04
		235	-0.8	-0.8	-0.2	-0.6	-0.9	-41.87
		236	-0.8	-2.0	-0.2	-0.7	-2.0	-6.90
		239	-0.1	-2.0	-0.2	-0.1	-2.0	-4.61
		238	-0.1	-0.8	-0.2	-0.1	-0.8	-12.24

		NODE	Mxx	Myy	Mxy	Mmax	Mmin	ANGLE
	Max	Cent	1.8	1.8	0.7	2.6	1.3	-32.54
		235	3.8	2.4	0.7	4.5	2.3	-29.32
		236	0.4	2.2	0.7	2.4	0.1	72.39
		239	0.5	2.5	0.8	2.8	0.2	70.54
		238	3.2	1.3	0.8	3.4	1.0	-16.11
	Min	Cent	0.6	-1.5	-1.9	1.3	-2.6	-14.29
		235	1.4	-0.6	-1.9	2.3	-1.8	-24.94
		236	-0.4	-2.2	-1.9	0.4	-3.4	-45.39
		239	-0.1	-2.1	-1.8	-0.0	-3.2	5.70
		238	0.9	-2.2	-1.9	1.7	-3.0	-25.35

		NODE	Vxx	Vyy
	Max	Cent	6.0	3.6

		235	6.4	5.2	
		236	6.4	5.3	
		239	5.5	5.3	
		238	5.5	5.2	
	Min	Cent	2.0	-1.5	
		235	2.3	-0.0	
		236	2.3	-5.9	
		239	1.7	-5.9	
		238	1.7	-0.0	

LC		NODE	Fxx	Fyy	Fxy	Fmax	Fmin	ANGLE
RC ENV~2	Max	Cent	-0.1	1.9	0.4	2.0	-0.1	80.59
		235	-0.1	1.4	0.4	1.5	-0.1	79.71
		236	-0.1	2.4	0.4	2.4	-0.2	82.88
		239	0.0	2.4	0.4	2.4	-0.0	81.34
		238	0.0	1.4	0.4	1.5	-0.1	76.28
	Min	Cent	-0.3	-0.1	0.0	-0.1	-0.4	26.59
		235	-0.6	0.2	0.0	0.2	-0.7	85.48
		236	-0.6	-0.4	0.0	-0.1	-0.6	3.78
		239	-0.1	-0.4	0.0	-0.1	-0.4	3.66
		238	-0.1	0.2	0.0	0.2	-0.1	85.30

		NODE	Mxx	Myy	Mxy	Mmax	Mmin	ANGLE
	Max	Cent	1.3	0.9	-0.0	1.9	0.9	-32.25
		235	2.8	1.7	-0.1	3.3	1.6	-29.10
		236	0.1	1.1	-0.1	1.1	0.1	-86.61
		239	0.3	0.6	0.0	1.3	0.1	-48.34
		238	2.3	0.4	-0.0	2.5	0.4	-16.18
	Min	Cent	0.9	-0.1	-1.0	1.0	-0.7	-17.59
		235	2.0	0.7	-1.0	2.1	0.5	-12.91
		236	-0.1	-0.5	-1.0	0.3	-1.3	-43.44
		239	0.0	-0.3	-0.9	0.0	-0.8	-18.29
		238	1.6	-1.0	-0.9	1.7	-1.2	-7.93

		NODE	Vxx	Vyy
	Max	Cent	4.4	1.8
		235	4.7	3.8
		236	4.7	1.6
		239	4.0	1.6
		238	4.0	3.8
	Min	Cent	3.1	1.0
		235	3.3	1.8
		236	3.3	-0.9
		239	2.8	-0.9
		238	2.8	1.8

ELEM	MAT	SEC	LC		NODE	Fxx	Fyy	Fxy	Fmax	Fmin	ANGLE
181	1	1	SX (RS)		Cent	0.1	1.1	0.4	1.2	0.0	71.53
					237	0.2	0.8	0.4	0.9	0.1	62.65
					238	0.2	1.4	0.4	1.5	0.1	74.52
					241	0.1	1.4	0.4	1.5	0.0	75.98
					240	0.1	0.8	0.4	0.9	-0.1	66.29

		NODE	Mxx	Myy	Mxy	Mmax	Mmin	ANGLE
		Cent	1.7	1.3	1.5	3.0	-0.0	40.83
		237	2.3	1.1	1.5	3.3	0.1	33.61
		238	1.2	1.6	1.5	2.9	-0.1	48.79
		241	1.2	1.5	1.5	2.9	-0.2	48.29
		240	2.1	0.9	1.5	3.1	-0.1	33.44

		NODE	Vxx	Vyy
		Cent	2.1	0.3
		237	2.3	0.5
		238	2.3	0.5
		241	2.0	0.5
		240	2.0	0.5

LC		NODE	Fxx	Fyy	Fxy	Fmax	Fmin	ANGLE
SY (RS)		Cent	0.0	1.0	0.4	1.2	-0.1	72.48

		237	0.3	0.9	0.4	1.1	0.2	65.62
		238	0.3	1.2	0.4	1.3	0.2	70.03
		241	0.3	1.2	0.4	1.3	0.2	70.38
		240	0.3	0.9	0.4	1.1	0.1	66.10

		NODE	Mxx	Myy	Mxy	Mmax	Mmin	ANGLE
		Cent	0.1	1.8	0.3	1.9	0.1	81.72
		237	0.2	1.4	0.2	1.4	0.2	79.27
		238	0.1	1.4	0.3	1.4	0.1	77.85
		241	0.2	2.3	0.3	2.4	0.2	82.35
		240	0.3	2.3	0.2	2.3	0.3	83.12

		NODE	Vxx	Vyy
		Cent	0.1	1.9
		237	0.3	1.8
		238	0.3	2.1
		241	0.2	2.1
		240	0.2	1.8

LC		NODE	Fxx	Fyy	Fxy	Fmax	Fmin	ANGLE
RC ENV~1	Max	Cent	-0.0	2.1	0.6	2.2	-0.2	80.40
		237	0.1	1.9	0.6	2.0	-0.0	80.19
		238	0.1	2.4	0.6	2.5	-0.0	77.29
		241	0.2	2.4	0.6	2.5	0.0	77.63
		240	0.2	1.9	0.6	2.0	0.0	79.18
	Min	Cent	-0.4	-0.2	-0.2	-0.1	-0.5	-55.48
		237	-0.5	-0.1	-0.2	-0.0	-0.6	-73.15
		238	-0.5	-0.5	-0.2	-0.3	-0.6	-39.92
		241	-0.4	-0.5	-0.2	-0.1	-0.6	-60.56
		240	-0.4	-0.1	-0.2	0.0	-0.5	-69.93

		NODE	Mxx	Myy	Mxy	Mmax	Mmin	ANGLE
	Max	Cent	7.6	1.8	1.2	7.6	1.8	-0.27
		237	12.1	2.5	1.2	12.1	2.5	-0.06
		238	3.5	1.4	1.1	3.7	1.1	-12.73
		241	3.4	1.9	1.3	3.6	1.9	26.46
		240	11.6	2.5	1.3	11.6	2.5	0.28
	Min	Cent	2.2	-1.9	-1.8	2.9	-2.0	-22.84
		237	3.8	-1.0	-1.7	4.4	-1.3	-18.94
		238	0.7	-1.8	-1.9	1.7	-2.8	-28.22
		241	0.6	-2.8	-1.8	1.6	-2.9	-27.24
		240	3.6	-2.2	-1.7	4.2	-2.2	-19.03

		NODE	Vxx	Vyy
	Max	Cent	14.8	2.3
		237	15.2	2.1
		238	15.2	2.5
		241	14.4	2.5
		240	14.4	2.1
	Min	Cent	5.1	-1.5
		237	5.2	-1.5
		238	5.2	-1.6
		241	5.0	-1.6
		240	5.0	-1.5

LC		NODE	Fxx	Fyy	Fxy	Fmax	Fmin	ANGLE
RC ENV~2	Max	Cent	-0.1	1.6	0.3	1.6	-0.2	80.41
		237	-0.2	1.4	0.3	1.5	-0.2	80.22
		238	-0.2	1.7	0.3	1.7	-0.2	81.35
		241	-0.1	1.7	0.3	1.7	-0.1	80.60
		240	-0.1	1.4	0.3	1.5	-0.1	79.26
	Min	Cent	-0.3	0.5	0.2	0.5	-0.4	71.66
		237	-0.4	0.6	0.2	0.7	-0.4	75.95
		238	-0.4	0.3	0.2	0.4	-0.4	68.42
		241	-0.2	0.3	0.2	0.4	-0.3	64.56
		240	-0.2	0.6	0.2	0.7	-0.3	74.15

		NODE	Mxx	Myy	Mxy	Mmax	Mmin	ANGLE
	Max	Cent	5.5	1.0	0.2	5.5	0.9	-0.95
		237	8.8	1.7	0.2	8.8	1.7	-0.53

	238	2.6	0.5	0.2	2.7	0.4	-12.82
	241	2.5	0.3	0.2	2.5	0.3	-9.20
	240	8.4	1.4	0.3	8.4	1.4	-0.09
Min	Cent	3.8	-0.4	-0.8	3.8	-0.5	-4.96
	237	6.0	0.2	-0.8	6.0	0.2	-3.32
	238	1.6	-0.6	-0.9	1.6	-0.9	-8.27
	241	1.6	-1.1	-0.9	1.7	-1.3	-10.07
	240	5.6	-0.1	-0.8	5.6	-0.2	-2.75

	NODE	Vxx	Vyy
Max	Cent	10.7	1.0
	237	10.9	0.9
	238	10.9	1.1
	241	10.4	1.1
	240	10.4	0.9
Min	Cent	7.1	0.1
	237	7.3	0.1
	238	7.3	0.1
	241	6.9	0.1
	240	6.9	0.1

ELEM	MAT	SEC	LC		NODE	Fxx	Fyy	Fxy	Fmax	Fmin	ANGLE
182	1	1	SX	(RS)	Cent	0.1	2.3	0.1	2.3	0.1	87.25
					238	0.1	1.5	0.1	1.5	0.1	85.58
					239	0.1	3.2	0.1	3.2	0.1	88.03
					242	0.1	3.2	0.1	3.2	0.1	88.01
					241	0.1	1.5	0.1	1.5	0.1	85.47

	NODE	Mxx	Myy	Mxy	Mmax	Mmin	ANGLE
	Cent	0.5	1.6	1.4	2.5	-0.4	56.66
	238	0.8	1.5	1.3	2.5	-0.2	52.79
	239	0.3	2.6	1.3	3.2	-0.3	65.37
	242	0.3	2.0	1.3	2.7	-0.4	61.04
	241	0.8	1.4	1.3	2.5	-0.3	52.22

	NODE	Vxx	Vyy
	Cent	1.2	2.4
	238	1.2	0.5
	239	1.2	5.2
	242	1.2	5.2
	241	1.2	0.5

LC		NODE	Fxx	Fyy	Fxy	Fmax	Fmin	ANGLE
SY	(RS)	Cent	0.0	1.3	0.1	1.3	0.0	87.00
		238	0.1	1.2	0.1	1.2	0.1	86.42
		239	0.1	1.4	0.1	1.4	0.1	87.14
		242	0.1	1.4	0.1	1.4	0.1	87.17
		241	0.1	1.2	0.1	1.2	0.1	86.46

	NODE	Mxx	Myy	Mxy	Mmax	Mmin	ANGLE
	Cent	0.0	1.8	0.3	1.9	-0.0	81.21
	238	0.1	1.4	0.3	1.4	0.1	77.75
	239	0.0	1.5	0.3	1.6	-0.0	80.40
	242	0.0	2.1	0.3	2.1	-0.0	82.82
	241	0.2	2.3	0.3	2.4	0.1	82.69

	NODE	Vxx	Vyy
	Cent	0.1	1.6
	238	0.2	2.1
	239	0.2	1.2
	242	0.2	1.2
	241	0.2	2.1

LC		NODE	Fxx	Fyy	Fxy	Fmax	Fmin	ANGLE
RC ENV~1	Max	Cent	0.1	3.4	0.1	3.4	0.1	87.46
		238	0.1	2.4	0.1	2.4	0.1	86.38
		239	0.1	4.4	0.1	4.4	0.1	88.04
		242	0.1	4.4	0.1	4.4	0.1	88.05

		241	0.1	2.4	0.1	2.4	0.1	86.43
	Min	Cent	-0.1	-1.2	-0.1	-0.1	-1.2	-3.40
		238	-0.1	-0.5	-0.1	-0.1	-0.5	-8.96
		239	-0.1	-2.0	-0.1	-0.1	-2.0	-1.97
		242	-0.2	-2.0	-0.1	-0.2	-2.0	-2.07
		241	-0.2	-0.5	-0.1	-0.2	-0.5	-11.37

		NODE	Mxx	Myy	Mxy	Mmax	Mmin	ANGLE
	Max	Cent	1.6	1.4	1.0	2.3	0.9	43.50
		238	3.2	1.3	1.0	3.3	1.1	-12.73
		239	0.3	1.9	0.9	2.3	0.2	64.59
		242	0.4	1.9	1.1	2.3	0.2	60.98
		241	3.1	1.8	1.1	3.1	1.8	0.10
	Min	Cent	0.4	-2.2	-1.7	1.0	-2.9	-10.79
		238	0.9	-1.7	-1.7	1.7	-2.5	-10.84
		239	-0.3	-3.3	-1.7	-0.0	-4.0	8.17
		242	-0.2	-2.3	-1.6	-0.0	-3.1	3.96
		241	0.9	-2.8	-1.6	1.5	-2.9	-7.13

		NODE	Vxx	Vyy
	Max	Cent	5.5	2.2
		238	5.5	2.5
		239	5.5	4.3
		242	5.4	4.3
		241	5.4	2.5
	Min	Cent	1.6	-2.6
		238	1.7	-1.6
		239	1.7	-6.0
		242	1.6	-6.0
		241	1.6	-1.6

LC		NODE	Fxx	Fyy	Fxy	Fmax	Fmin	ANGLE
RC ENV~2	Max	Cent	0.0	2.3	0.1	2.3	0.0	88.73
		238	0.1	1.7	0.1	1.7	0.1	87.71
		239	0.1	2.8	0.1	2.8	0.1	88.96
		242	-0.0	2.8	0.1	2.8	-0.0	89.00
		241	-0.0	1.7	0.1	1.7	-0.0	87.84
	Min	Cent	-0.1	-0.0	0.0	0.0	-0.1	59.30
		238	-0.1	0.3	0.0	0.3	-0.1	81.76
		239	-0.1	-0.3	0.0	-0.0	-0.3	9.71
		242	-0.1	-0.3	0.0	-0.1	-0.4	11.81
		241	-0.1	0.3	0.0	0.3	-0.1	82.86

		NODE	Mxx	Myy	Mxy	Mmax	Mmin	ANGLE
	Max	Cent	1.2	0.3	0.2	1.3	0.2	-16.14
		238	2.4	0.4	0.1	2.4	0.4	-12.84
		239	0.1	0.4	0.1	0.5	0.1	68.78
		242	0.2	-0.1	0.2	0.7	-0.2	-32.67
		241	2.3	0.3	0.2	2.3	0.3	-1.20
	Min	Cent	0.8	-1.0	-0.8	0.9	-1.3	-12.33
		238	1.7	-0.6	-0.8	1.7	-0.8	-8.18
		239	-0.1	-1.7	-0.8	-0.0	-2.0	-7.79
		242	0.0	-0.5	-0.7	0.0	-0.9	-7.53
		241	1.6	-1.1	-0.7	1.6	-1.3	-8.07

		NODE	Vxx	Vyy
	Max	Cent	4.0	0.6
		238	4.0	1.1
		239	4.0	1.1
		242	3.9	1.1
		241	3.9	1.1
	Min	Cent	2.8	-0.6
		238	2.8	0.1
		239	2.8	-2.2
		242	2.7	-2.2
		241	2.7	0.1

ELEM	MAT	SEC	LC		NODE	Fxx	Fyy	Fxy	Fmax	Fmin	ANGLE
183	1	1	SX (RS)		Cent	0.2	0.9	0.8	1.5	-0.4	56.84
					240	0.1	0.7	0.8	1.3	-0.5	54.86
					241	0.1	1.2	0.8	1.6	-0.3	60.87

244	0.3	1.2	0.8	1.7	-0.2	59.02
243	0.3	0.7	0.8	1.4	-0.4	52.62

NODE	Mxx	Myy	Mxy	Mmax	Mmin	ANGLE
Cent	1.3	0.9	1.7	2.8	-0.6	41.83
240	2.1	0.9	1.8	3.4	-0.3	35.45
241	1.2	1.5	1.5	2.9	-0.2	47.84
244	0.8	1.0	1.7	2.6	-0.7	46.72
243	1.1	0.3	1.9	2.6	-1.2	39.12

NODE	Vxx	Vyy
Cent	1.3	0.8
240	2.0	1.0
241	2.0	0.8
244	0.7	0.8
243	0.7	1.0

LC		NODE	Fxx	Fyy	Fxy	Fmax	Fmin	ANGLE
SY (RS)		Cent	0.4	1.5	0.3	1.6	0.3	77.25
		240	0.1	1.6	0.3	1.6	0.1	79.59
		241	0.1	1.5	0.3	1.6	0.1	79.22
		244	0.7	1.5	0.3	1.6	0.6	73.54
		243	0.7	1.6	0.3	1.6	0.6	74.33

NODE	Mxx	Myy	Mxy	Mmax	Mmin	ANGLE
Cent	0.5	2.6	0.4	2.7	0.4	80.88
240	0.3	2.1	0.3	2.2	0.2	81.77
241	0.2	2.2	0.4	2.3	0.1	80.10
244	0.6	3.3	0.5	3.3	0.6	80.38
243	0.7	3.0	0.4	3.1	0.7	81.18

NODE	Vxx	Vyy
Cent	0.3	1.8
240	0.2	1.6
241	0.2	1.9
244	0.3	1.9
243	0.3	1.6

LC		NODE	Fxx	Fyy	Fxy	Fmax	Fmin	ANGLE
RC ENV~1	Max	Cent	0.3	2.6	0.9	2.7	0.2	81.22
		240	0.1	2.7	0.9	2.7	-0.0	81.96
		241	0.1	2.7	0.9	2.7	-0.0	-89.95
		244	0.5	2.7	0.9	2.7	0.4	-89.95
		243	0.5	2.7	0.9	2.7	0.4	80.41
	Min	Cent	-0.5	-0.4	-0.7	-0.3	-0.8	-54.23
		240	-0.2	-0.5	-0.7	-0.1	-0.7	-27.28
		241	-0.2	-0.4	-0.7	-0.1	-0.9	-32.10
		244	-0.8	-0.4	-0.7	-0.3	-1.0	-72.31
		243	-0.8	-0.5	-0.7	-0.4	-0.9	-69.85

NODE		Mxx	Myy	Mxy	Mmax	Mmin	ANGLE
	Max	Cent	7.7	2.9	1.6	7.7	2.8	1.19
		240	11.6	2.2	1.5	11.6	2.2	-0.10
		241	3.4	1.9	1.4	3.7	1.7	28.17
		244	3.8	3.6	1.6	3.9	2.4	32.96
		243	12.3	3.8	1.8	12.3	3.8	0.72
	Min	Cent	2.6	-2.4	-1.8	3.4	-2.5	-23.79
		240	3.6	-2.0	-2.0	4.4	-2.0	-20.75
		241	0.6	-2.6	-1.7	1.5	-2.7	-26.97
		244	1.1	-3.0	-1.7	1.4	-3.0	-6.52
		243	5.0	-2.1	-2.0	5.4	-2.2	-3.40

NODE		Vxx	Vyy
	Max	Cent	14.6	0.5
		240	14.4	0.4
		241	14.4	0.7
		244	14.9	0.7
		243	14.9	0.4
	Min	Cent	5.9	-3.0

		240	5.0	-2.8			
		241	5.0	-3.1			
		244	6.6	-3.1			
		243	6.6	-2.8			

LC		NODE	Fxx	Fyy	Fxy	Fmax	Fmin	ANGLE
RC ENV~2	Max	Cent	-0.0	1.9	0.4	1.9	-0.1	89.72
		240	-0.0	1.8	0.4	1.8	-0.1	89.69
		241	-0.0	2.0	0.4	2.0	-0.1	89.72
		244	-0.0	2.0	0.4	2.0	-0.1	89.74
		243	-0.0	1.8	0.4	1.8	-0.1	89.71
	Min	Cent	-0.2	0.6	-0.2	0.8	-0.2	64.37
		240	-0.1	0.8	-0.2	0.9	-0.2	71.34
		241	-0.1	0.5	-0.2	0.7	-0.3	61.60
		244	-0.3	0.5	-0.2	0.7	-0.3	61.83
		243	-0.3	0.8	-0.2	0.9	-0.3	71.67

	NODE	Mxx	Myy	Mxy	Mmax	Mmin	ANGLE
Max	Cent	5.6	1.1	0.4	5.6	1.1	0.77
	240	8.4	1.2	0.3	8.4	1.2	-0.37
	241	2.5	0.2	0.3	2.5	0.2	1.57
	244	2.8	1.1	0.5	2.8	1.0	4.78
	243	8.8	2.1	0.5	8.8	2.1	0.52
Min	Cent	3.8	-0.1	-0.8	3.8	-0.2	-3.21
	240	5.6	-0.2	-0.9	5.6	-0.3	-3.02
	241	1.6	-0.9	-0.7	1.7	-1.1	-9.52
	244	1.9	-0.2	-0.7	1.9	-0.3	-4.36
	243	6.1	0.6	-0.9	6.1	0.6	-2.17

	NODE	Vxx	Vyy
Max	Cent	10.5	-1.2
	240	10.4	-1.0
	241	10.4	-1.2
	244	10.7	-1.2
	243	10.7	-1.0
Min	Cent	7.1	-1.6
	240	6.9	-1.6
	241	6.9	-1.6
	244	7.3	-1.6
	243	7.3	-1.6

ELEM	MAT	SEC	LC		NODE	Fxx	Fyy	Fxy	Fmax	Fmin	ANGLE
184	1	1	SX (RS)		Cent	0.2	1.9	0.4	2.0	0.1	76.56
					241	0.1	1.2	0.4	1.3	-0.1	71.20
					242	0.1	2.6	0.4	2.7	-0.0	80.81
					245	0.5	2.6	0.4	2.7	0.4	79.20
					244	0.5	1.2	0.4	1.4	0.3	64.53

	NODE	Mxx	Myy	Mxy	Mmax	Mmin	ANGLE
	Cent	0.4	1.2	1.4	2.2	-0.7	53.35
	241	0.8	1.4	1.4	2.5	-0.3	51.47
	242	0.3	2.5	1.4	3.2	-0.3	64.49
	245	0.4	1.6	1.3	2.4	-0.5	57.62
	244	0.6	1.0	1.3	2.1	-0.6	49.59

	NODE	Vxx	Vyy
	Cent	1.1	3.3
	241	1.2	0.8
	242	1.2	6.4
	245	1.0	6.4
	244	1.0	0.8

LC		NODE	Fxx	Fyy	Fxy	Fmax	Fmin	ANGLE
SY (RS)		Cent	0.2	1.5	0.1	1.5	0.2	84.76
		241	0.0	1.5	0.1	1.6	0.0	85.66
		242	0.0	1.4	0.1	1.4	0.0	85.21
		245	0.4	1.4	0.1	1.4	0.4	83.43
		244	0.4	1.5	0.1	1.6	0.4	84.24

	NODE	Mxx	Myy	Mxy	Mmax	Mmin	ANGLE
	Cent	0.1	2.7	0.4	2.8	0.1	82.17
	241	0.2	2.2	0.4	2.3	0.1	80.35
	242	0.1	2.6	0.3	2.6	0.1	83.35
	245	0.0	2.9	0.3	3.0	0.0	83.27
	244	0.2	3.2	0.4	3.2	0.2	82.16

	NODE	Vxx	Vyy
	Cent	0.3	1.3
	241	0.2	1.9
	242	0.2	0.7
	245	0.4	0.7
	244	0.4	1.9

LC		NODE	Fxx	Fyy	Fxy	Fmax	Fmin	ANGLE
RC ENV~1	Max	Cent	0.2	3.1	0.4	3.1	0.1	-84.78
		241	0.0	2.7	0.4	2.8	-0.0	-85.61
		242	0.0	3.7	0.4	3.8	-0.0	84.19
		245	0.4	3.7	0.4	3.8	0.4	83.51
		244	0.4	2.7	0.4	2.8	0.3	-85.83
	Min	Cent	-0.3	-0.8	-0.5	-0.1	-1.0	-38.15
		241	-0.1	-0.4	-0.5	-0.0	-0.5	-21.64
		242	-0.1	-1.5	-0.5	-0.0	-1.6	22.36
		245	-0.5	-1.5	-0.5	-0.3	-1.7	-21.97
		244	-0.5	-0.4	-0.5	-0.3	-0.8	-50.04

	NODE	Mxx	Myy	Mxy	Mmax	Mmin	ANGLE
Max	Cent	1.7	2.6	1.3	2.7	1.0	80.31
	241	3.1	1.8	1.2	3.1	1.6	11.39
	242	0.4	2.0	1.2	2.6	0.1	61.14
	245	0.5	3.3	1.3	3.3	0.2	84.36
	244	3.5	3.4	1.3	3.6	1.9	17.61
Min	Cent	0.5	-2.8	-1.5	0.8	-2.9	-6.98
	241	0.9	-2.6	-1.5	1.5	-2.7	-24.12
	242	-0.3	-3.2	-1.5	-0.0	-3.8	6.81
	245	-0.2	-2.6	-1.4	0.2	-2.7	-7.94
	244	1.2	-2.9	-1.4	1.6	-3.0	-5.53

	NODE	Vxx	Vyy
Max	Cent	5.6	1.8
	241	5.4	0.7
	242	5.4	4.6
	245	5.9	4.6
	244	5.9	0.7
Min	Cent	1.8	-4.7
	241	1.6	-3.1
	242	1.6	-8.1
	245	2.0	-8.1
	244	2.0	-3.1

LC		NODE	Fxx	Fyy	Fxy	Fmax	Fmin	ANGLE
RC ENV~2	Max	Cent	0.0	2.2	0.1	2.2	0.0	-84.98
		241	-0.0	2.0	0.1	2.0	-0.0	-85.77
		242	-0.0	2.5	0.1	2.5	-0.0	-85.42
		245	0.2	2.5	0.1	2.5	0.1	-85.73
		244	0.2	2.0	0.1	2.0	0.1	-85.97
	Min	Cent	-0.1	0.2	-0.2	0.3	-0.1	57.06
		241	-0.1	0.5	-0.2	0.6	-0.1	77.64
		242	-0.1	-0.2	-0.2	0.0	-0.3	32.74
		245	-0.2	-0.2	-0.2	0.2	-0.2	19.03
		244	-0.2	0.5	-0.2	0.6	-0.2	71.75

	NODE	Mxx	Myy	Mxy	Mmax	Mmin	ANGLE
Max	Cent	1.3	0.5	0.4	1.4	0.3	23.71
	241	2.3	0.2	0.3	2.3	0.1	2.31
	242	0.2	0.4	0.3	0.6	-0.1	55.71
	245	0.3	0.8	0.4	0.9	0.2	-58.51
	244	2.5	1.0	0.4	2.6	0.9	15.07
Min	Cent	0.9	-0.6	-0.6	0.9	-0.8	-8.17
	241	1.6	-0.9	-0.6	1.6	-1.1	-5.14

					242	-0.1	-1.7	-0.6	0.0	-1.9	-2.69
					245	0.0	0.0	-0.5	0.3	-0.4	-59.43
					244	1.7	-0.2	-0.5	1.7	-0.3	-3.33

	NODE	Vxx	Vyy
Max	Cent	4.1	-0.4
	241	3.9	-1.2
	242	3.9	0.4
	245	4.3	0.4
	244	4.3	-1.2
Min	Cent	2.8	-2.7
	241	2.7	-1.6
	242	2.7	-4.1
	245	2.9	-4.1
	244	2.9	-1.6

ELEM	MAT	SEC	LC		NODE	Fxx	Fyy	Fxy	Fmax	Fmin	ANGLE
185	1	1	SX	(RS)	Cent	1.4	1.0	1.4	2.6	-0.2	40.91
					243	0.3	0.7	1.4	1.9	-0.9	49.25
					244	0.3	1.3	1.4	2.3	-0.7	55.43
					247	2.5	1.3	1.4	3.4	0.4	33.31
					246	2.5	0.7	1.4	3.2	-0.1	28.21

	NODE	Mxx	Myy	Mxy	Mmax	Mmin	ANGLE
	Cent	1.7	0.4	1.7	2.9	-0.7	34.42
	243	1.1	0.4	1.3	2.1	-0.6	36.89
	244	0.9	1.2	2.0	3.1	-1.0	47.19
	247	2.0	2.2	1.9	4.0	0.2	46.89
	246	6.9	0.8	1.1	7.1	0.6	10.08

	NODE	Vxx	Vyy
	Cent	7.6	3.3
	243	0.7	1.6
	244	0.7	5.1
	247	14.8	5.1
	246	14.8	1.6

LC		NODE	Fxx	Fyy	Fxy	Fmax	Fmin	ANGLE
SY	(RS)	Cent	0.8	2.6	0.1	2.6	0.8	85.40
		243	0.4	3.2	0.1	3.2	0.4	86.95
		244	0.4	2.1	0.1	2.1	0.4	84.93
		247	1.2	2.1	0.1	2.1	1.2	80.89
		246	1.2	3.2	0.1	3.2	1.2	85.82

	NODE	Mxx	Myy	Mxy	Mmax	Mmin	ANGLE
	Cent	0.7	3.6	0.6	3.7	0.6	79.23
	243	0.7	2.7	0.6	2.8	0.5	75.10
	244	0.6	3.3	0.5	3.4	0.6	80.34
	247	0.6	3.7	0.5	3.8	0.5	81.47
	246	2.0	4.9	0.6	5.0	1.9	78.60

	NODE	Vxx	Vyy
	Cent	2.3	2.7
	243	0.3	3.8
	244	0.3	1.6
	247	4.3	1.6
	246	4.3	3.8

LC		NODE	Fxx	Fyy	Fxy	Fmax	Fmin	ANGLE
RC ENV~1	Max	Cent	1.3	4.0	1.4	4.0	0.7	87.88
		243	0.3	4.8	1.4	4.8	0.3	88.42
		244	0.3	3.3	1.4	3.3	0.3	87.64
		247	2.4	3.3	1.4	3.8	1.1	45.90
		246	2.4	4.8	1.4	4.8	1.1	88.08
	Min	Cent	-1.5	-1.2	-1.4	-0.8	-2.2	-23.96
		243	-0.5	-1.6	-1.4	-0.5	-1.6	-9.23
		244	-0.5	-0.9	-1.4	-0.5	-1.6	-23.93
		247	-2.6	-0.9	-1.4	-0.8	-3.2	-69.39

```
                                   246       -2.6       -1.6       -1.4       -1.2       -3.0     -23.24

                          NODE        Mxx        Myy        Mxy       Mmax       Mmin      ANGLE
                      ---- ------ ---------- ---------- ---------- ---------- ---------- ----------
                       Max   Cent        8.9        4.9        1.9        9.0        4.2       5.75
                             243       12.1        3.2        1.3       12.1        3.1       0.51
                             244        3.7        3.6        2.2        4.5        2.3      36.50
                             247        5.8        5.8        2.3        6.8        5.0      43.06
                             246       15.0        7.1        1.4       15.0        6.7       2.75
                       Min   Cent        2.6       -2.3       -1.5        3.5       -2.4     -29.38
                             243        4.9       -2.1       -1.2        5.2       -2.2     -13.74
                             244        1.1       -3.0       -1.8        1.3       -3.0      -3.57
                             247        0.7       -1.6       -1.4        1.8       -1.6     -37.06
                             246       -0.1       -2.6       -0.8        1.8       -2.7     -65.56

                          NODE        Vxx        Vyy
                      ---- ------ ---------- ----------
                       Max   Cent       16.6        0.3
                             243       14.9        0.9
                             244       14.9        1.9
                             247       22.3        1.9
                             246       22.3        0.9
                       Min   Cent       -0.2       -6.4
                             243        6.6       -6.7
                             244        6.6       -8.3
                             247       -7.3       -8.3
                             246       -7.3       -6.7

                 LC        NODE        Fxx        Fyy        Fxy       Fmax       Fmin      ANGLE
            -------- ---- ------ ---------- ---------- ---------- ---------- ---------- ----------
            RC ENV~2  Max   Cent        0.5        2.4        0.6        2.4        0.2     -83.32
                             243        0.0        2.6        0.6        2.6       -0.1     -83.38
                             244        0.0        2.1        0.6        2.2       -0.1     -82.29
                             247        1.1        2.1        0.6        2.2        0.5     -83.26
                             246        1.1        2.6        0.6        2.6        0.7     -84.11
                       Min   Cent       -0.6        0.8       -0.5        1.1       -0.7      63.11
                             243       -0.2        1.2       -0.5        1.3       -0.3      73.97
                             244       -0.2        0.5       -0.5        0.8       -0.4      65.54
                             247       -0.9        0.5       -0.5        1.0       -1.0      86.15
                             246       -0.9        1.2       -0.5        1.4       -1.0      87.33

                          NODE        Mxx        Myy        Mxy       Mmax       Mmin      ANGLE
                      ---- ------ ---------- ---------- ---------- ---------- ---------- ----------
                       Max   Cent        6.5        2.3        0.8        6.5        2.3       5.59
                             243        8.7        1.6        0.4        8.7        1.6       0.45
                             244        2.7        0.8        0.9        2.9        0.7      22.18
                             247        4.2        3.6        1.1        4.2        3.5       8.62
                             246       10.8        3.5        0.6       10.8        3.4       2.78
                       Min   Cent        4.2        1.1       -0.4        4.3        1.1       2.65
                             243        6.0        0.1       -0.6        6.0        0.1      -0.37
                             244        1.9       -0.2       -0.5        1.9       -0.3       2.57
                             247        2.6        1.8       -0.2        2.9        1.1      30.72
                             246        5.8        2.1       -0.2        5.8        2.1       1.13

                          NODE        Vxx        Vyy
                      ---- ------ ---------- ----------
                       Max   Cent       11.9       -2.6
                             243       10.7       -2.8
                             244       10.7       -2.3
                             247       13.9       -2.3
                             246       13.9       -2.8
                       Min   Cent        6.4       -4.7
                             243        7.3       -4.0
                             244        7.3       -5.5
                             247        3.8       -5.5
                             246        3.8       -4.0

  ELEM   MAT    SEC        LC        NODE        Fxx        Fyy        Fxy       Fmax       Fmin      ANGLE
------ ------ ------ -------- ---- ------ ---------- ---------- ---------- ---------- ---------- ----------
   186      1      1       SX (RS)   Cent        0.0        0.8        1.3        1.7       -0.9      53.49
                                     244        0.7        1.6        1.3        2.5       -0.2      54.86
                                     245        0.7        0.4        1.3        1.8       -0.7      41.46
                                     248        0.7        0.4        1.3        1.8       -0.7      40.94
                                     247        0.7        1.6        1.3        2.5       -0.2      54.39

                          NODE        Mxx        Myy        Mxy       Mmax       Mmin      ANGLE
                      ---- ------ ---------- ---------- ---------- ---------- ---------- ----------
```

Cent	0.3	0.7	1.1	1.7	-0.6	49.79
244	0.6	1.1	1.2	2.1	-0.4	51.21
245	0.1	1.3	1.1	1.9	-0.5	59.27
248	0.3	2.3	1.1	2.8	-0.1	66.72
247	1.4	2.1	1.2	3.0	0.5	52.97

NODE	Vxx	Vyy
Cent	0.8	5.6
244	1.0	5.1
245	1.0	6.5
248	2.0	6.5
247	2.0	5.1

LC		NODE	Fxx	Fyy	Fxy	Fmax	Fmin	ANGLE
SY (RS)		Cent	0.1	1.4	0.5	1.5	-0.1	72.84
		244	0.4	2.2	0.5	2.3	0.3	76.72
		245	0.4	0.8	0.5	1.1	0.1	57.40
		248	0.5	0.8	0.5	1.1	0.2	54.99
		247	0.5	2.2	0.5	2.3	0.4	76.13

	NODE	Mxx	Myy	Mxy	Mmax	Mmin	ANGLE
	Cent	0.3	3.3	0.4	3.4	0.2	83.31
	244	0.2	3.2	0.4	3.2	0.2	83.15
	245	0.1	3.5	0.4	3.5	0.0	82.58
	248	0.2	2.6	0.3	2.7	0.2	83.16
	247	1.0	4.0	0.2	4.1	1.0	85.78

NODE	Vxx	Vyy
Cent	1.0	0.2
244	0.4	1.6
245	0.4	1.6
248	1.6	1.6
247	1.6	1.6

LC		NODE	Fxx	Fyy	Fxy	Fmax	Fmin	ANGLE
RC ENV~1	Max	Cent	0.1	2.6	1.2	2.7	0.1	-77.29
		244	0.6	3.5	1.2	3.5	0.3	83.43
		245	0.6	2.0	1.2	2.2	0.2	-76.83
		248	0.9	2.0	1.2	2.2	0.5	49.63
		247	0.9	3.5	1.2	3.5	0.6	82.76
	Min	Cent	-0.0	-0.3	-1.3	0.4	-1.2	-36.78
		244	-0.8	-1.0	-1.3	-0.1	-1.9	-32.10
		245	-0.8	0.1	-1.3	0.4	-1.6	-57.70
		248	-0.6	0.1	-1.3	0.5	-1.5	-54.99
		247	-0.6	-1.0	-1.3	-0.0	-1.8	-29.63

	NODE	Mxx	Myy	Mxy	Mmax	Mmin	ANGLE
Max	Cent	1.9	4.4	1.4	4.5	1.8	79.77
	244	3.5	3.5	1.5	3.7	1.8	21.55
	245	0.4	3.9	1.1	4.0	0.3	82.09
	248	0.3	4.3	1.3	4.4	0.1	73.03
	247	4.3	6.0	1.6	6.1	4.1	79.55
Min	Cent	0.6	-2.2	-0.9	0.7	-2.2	-2.50
	244	1.2	-2.9	-1.0	1.5	-2.9	-1.47
	245	0.1	-3.0	-1.0	0.1	-3.0	-6.83
	248	-0.4	-1.0	-0.9	-0.3	-1.4	-7.46
	247	0.4	-2.1	-0.8	0.9	-2.1	2.82

NODE	Vxx	Vyy
Max Cent	6.4	2.9
244	5.9	1.9
245	5.9	4.1
248	7.5	4.1
247	7.5	1.9
Min Cent	2.2	-8.4
244	2.0	-8.3
245	2.0	-8.8
248	1.4	-8.8
247	1.4	-8.3

LC		NODE	Fxx	Fyy	Fxy	Fmax	Fmin	ANGLE
RC ENV~2	Max	Cent	0.1	1.9	0.5	1.9	0.1	-77.72
		244	0.2	2.2	0.5	2.3	0.1	-77.50
		245	0.2	1.5	0.5	1.6	0.1	-77.25
		248	0.5	1.5	0.5	1.6	0.2	-71.62
		247	0.5	2.2	0.5	2.4	0.3	-72.87
	Min	Cent	0.0	0.6	-0.6	0.8	-0.3	68.37
		244	-0.3	0.4	-0.6	0.8	-0.4	62.62
		245	-0.3	0.7	-0.6	0.8	-0.5	-89.97
		248	-0.2	0.7	-0.6	0.8	-0.4	-89.96
		247	-0.2	0.4	-0.6	0.7	-0.5	61.27

	NODE	Mxx	Myy	Mxy	Mmax	Mmin	ANGLE
Max	Cent	1.4	1.9	0.7	2.1	1.3	52.35
	244	2.5	0.8	0.7	2.7	0.6	20.10
	245	0.3	1.4	0.5	1.6	0.2	69.17
	248	0.0	2.7	0.6	2.7	0.0	-88.51
	247	3.0	3.4	0.9	3.7	2.9	61.72
Min	Cent	0.9	0.9	-0.1	1.1	0.4	56.81
	244	1.7	-0.2	-0.1	1.8	-0.2	6.75
	245	0.2	-0.1	-0.3	0.3	-0.3	23.73
	248	-0.2	1.2	-0.1	1.4	-0.5	69.07
	247	1.8	1.6	0.0	2.2	1.0	42.02

	NODE	Vxx	Vyy
Max	Cent	4.6	-1.3
	244	4.3	-2.3
	245	4.3	-0.3
	248	5.4	-0.3
	247	5.4	-2.3
Min	Cent	3.2	-5.3
	244	2.9	-5.5
	245	2.9	-5.2
	248	3.3	-5.2
	247	3.3	-5.5

ELEM	MAT	SEC	LC		NODE	Fxx	Fyy	Fxy	Fmax	Fmin	ANGLE
187	1	1	SX (RS)		Cent	3.3	0.9	3.7	6.0	-1.9	36.15
					246	2.5	2.1	3.7	6.1	-1.4	43.54
					247	2.5	0.4	3.7	5.3	-2.4	37.11
					36	9.0	0.4	3.7	10.4	-1.0	20.47
					16	9.0	2.1	3.7	10.7	0.5	23.68

	NODE	Mxx	Myy	Mxy	Mmax	Mmin	ANGLE
	Cent	5.8	3.1	2.6	7.4	1.5	31.12
	246	6.9	1.1	6.7	11.3	-3.3	33.12
	247	1.7	0.9	0.7	2.1	0.5	30.01
	36	1.8	4.0	0.7	4.2	1.6	74.40
	16	26.8	8.6	6.6	28.9	6.5	17.97

	NODE	Vxx	Vyy
	Cent	14.5	6.0
	246	14.8	5.7
	247	14.8	6.6
	36	43.7	6.6
	16	43.7	5.7

LC		NODE	Fxx	Fyy	Fxy	Fmax	Fmin	ANGLE
SY (RS)		Cent	0.1	4.5	2.0	5.3	-0.6	68.58
		246	0.8	9.2	2.0	9.7	0.4	77.26
		247	0.8	0.6	2.0	2.7	-1.3	43.32
		36	0.8	0.6	2.0	2.7	-1.3	43.61
		16	0.8	9.2	2.0	9.7	0.3	77.32

	NODE	Mxx	Myy	Mxy	Mmax	Mmin	ANGLE
	Cent	1.0	6.5	1.2	6.7	0.7	78.57
	246	2.1	5.4	0.9	5.7	1.9	75.23
	247	0.6	3.7	0.8	3.9	0.4	76.60

		36	0.6	2.6	3.8	5.5	-2.3	52.45
		16	3.1	19.6	3.5	20.3	2.4	78.34

	NODE	Vxx	Vyy
	Cent	1.5	7.5
	246	4.3	27.0
	247	4.3	12.1
	36	3.2	12.1
	16	3.2	27.0

LC		NODE	Fxx	Fyy	Fxy	Fmax	Fmin	ANGLE
RC ENV~1	Max	Cent	2.9	6.5	3.3	6.8	-0.2	77.34
		246	2.6	12.8	3.3	13.0	1.1	82.66
		247	2.6	1.0	3.3	5.1	0.4	37.45
		36	8.3	1.0	3.3	9.6	-0.4	20.54
		16	8.3	12.8	3.3	13.0	3.5	83.08
	Min	Cent	-3.6	-2.5	-4.2	1.2	-6.0	-33.68
		246	-2.5	-5.7	-4.2	0.3	-6.7	-22.47
		247	-2.5	-0.2	-4.2	0.6	-5.6	-58.85
		36	-9.7	-0.2	-4.2	0.5	-11.2	-87.65
		16	-9.7	-5.7	-4.2	-0.3	-11.1	-24.59

	NODE	Mxx	Myy	Mxy	Mmax	Mmin	ANGLE
Max	Cent	13.1	9.9	3.8	13.3	7.8	29.23
	246	14.4	6.3	7.2	16.9	5.6	25.58
	247	5.9	6.4	1.7	7.2	3.9	39.21
	36	1.6	8.6	5.2	9.7	1.0	60.57
	16	38.8	25.7	7.7	41.1	16.4	16.29
Min	Cent	-0.5	-3.1	-1.5	1.5	-3.1	-53.43
	246	-0.4	-4.6	-6.1	4.4	-6.4	-2.57
	247	1.1	-0.9	0.0	1.9	-0.9	79.06
	36	-1.9	0.1	-2.4	0.4	-2.4	71.89
	16	-14.7	-13.5	-5.4	-0.4	-16.8	-69.08

	NODE	Vxx	Vyy
Max	Cent	34.3	1.7
	246	22.3	19.1
	247	22.3	8.3
	36	65.1	8.3
	16	65.1	19.1
Min	Cent	0.0	-13.8
	246	-7.3	-34.9
	247	-7.3	-15.8
	36	-22.2	-15.8
	16	-22.2	-34.9

LC		NODE	Fxx	Fyy	Fxy	Fmax	Fmin	ANGLE
RC ENV~2	Max	Cent	0.9	3.2	1.3	4.0	-0.2	-58.80
		246	1.2	5.9	1.3	6.2	0.8	-77.58
		247	1.2	0.7	1.3	2.1	0.3	37.97
		36	2.6	0.7	1.3	3.6	-0.5	-30.95
		16	2.6	5.9	1.3	6.3	1.5	-63.36
	Min	Cent	-1.8	1.4	-1.9	1.7	-2.2	75.04
		246	-0.8	2.2	-1.9	2.7	-1.4	67.40
		247	-0.8	0.3	-1.9	0.5	-2.2	-60.64
		36	-4.8	0.3	-1.9	0.4	-5.0	-85.17
		16	-4.8	2.2	-1.9	2.4	-4.9	79.81

	NODE	Mxx	Myy	Mxy	Mmax	Mmin	ANGLE
Max	Cent	9.3	5.6	2.1	9.4	5.5	9.86
	246	10.3	1.6	2.6	11.0	1.5	15.13
	247	4.2	3.8	1.2	5.2	2.8	39.53
	36	0.7	6.3	1.9	6.8	0.3	73.84
	16	25.3	11.6	3.1	25.5	11.6	-5.46
Min	Cent	5.0	3.2	0.3	5.7	1.9	28.60
	246	5.5	0.1	-2.1	6.1	-0.2	0.91
	247	2.7	2.7	0.8	3.5	1.9	44.83
	36	-0.6	3.5	1.4	4.0	-1.1	71.46
	16	7.5	5.6	-1.4	9.8	3.4	36.77

	NODE	Vxx	Vyy

Max	Cent	24.4	-5.5
	246	13.9	-7.7
	247	13.9	-2.1
	36	43.0	-2.1
	16	43.0	-7.7
Min	Cent	13.6	-9.9
	246	3.8	-13.7
	247	3.8	-6.9
	36	13.9	-6.9
	16	13.9	-13.7

ELEM	MAT	SEC	LC		NODE	Fxx	Fyy	Fxy	Fmax	Fmin	ANGLE
188	1	1	SX (RS)		Cent	0.7	1.3	0.8	1.9	0.2	54.63
					247	0.3	0.9	0.8	1.5	-0.2	55.05
					248	0.3	1.7	0.8	2.1	-0.1	65.15
					24	1.1	1.7	0.8	2.3	0.6	54.22
					36	1.1	0.9	0.8	1.8	0.2	40.77

	NODE	Mxx	Myy	Mxy	Mmax	Mmin	ANGLE
	Cent	0.8	2.4	0.7	2.7	0.5	69.24
	247	1.1	0.8	0.8	1.8	0.2	39.63
	248	0.2	1.5	0.9	1.9	-0.3	63.16
	24	0.2	3.5	0.7	3.7	0.1	78.56
	36	1.9	4.0	0.6	4.2	1.7	75.34

	NODE	Vxx	Vyy
	Cent	2.8	5.2
	247	2.0	6.6
	248	2.0	4.2
	24	3.5	4.2
	36	3.5	6.6

LC		NODE	Fxx	Fyy	Fxy	Fmax	Fmin	ANGLE
SY (RS)		Cent	0.1	0.7	0.1	0.7	0.1	78.07
		247	0.3	0.5	0.1	0.6	0.3	64.76
		248	0.3	1.3	0.1	1.3	0.3	82.64
		24	0.2	1.3	0.1	1.3	0.2	83.70
		36	0.2	0.5	0.1	0.6	0.1	73.14

	NODE	Mxx	Myy	Mxy	Mmax	Mmin	ANGLE
	Cent	0.1	1.8	0.2	1.8	0.0	83.28
	247	1.0	4.0	0.4	4.0	0.9	82.61
	248	0.2	2.6	0.4	2.7	0.1	80.92
	24	0.4	3.1	0.5	3.2	0.3	79.30
	36	0.9	2.7	0.6	2.9	0.8	73.52

	NODE	Vxx	Vyy
	Cent	0.7	5.7
	247	1.6	12.1
	248	1.6	0.8
	24	0.2	0.8
	36	0.2	12.1

LC		NODE	Fxx	Fyy	Fxy	Fmax	Fmin	ANGLE
RC ENV~1	Max	Cent	0.7	2.1	0.8	2.4	0.3	65.38
		247	0.4	1.4	0.8	1.8	0.4	60.34
		248	0.4	3.0	0.8	3.1	0.4	73.28
		24	1.0	3.0	0.8	3.1	0.7	69.27
		36	1.0	1.4	0.8	2.0	0.4	50.94
	Min	Cent	-0.8	-0.5	-0.8	0.2	-1.5	-66.45
		247	-0.2	-0.5	-0.8	-0.0	-1.2	-59.63
		248	-0.2	-0.6	-0.8	-0.1	-1.2	-55.37
		24	-1.3	-0.6	-0.8	-0.1	-1.8	-59.99
		36	-1.3	-0.5	-0.8	-0.0	-1.8	-63.59

	NODE	Mxx	Myy	Mxy	Mmax	Mmin	ANGLE
Max	Cent	2.0	5.8	0.8	5.8	2.0	88.61

		247	4.3	6.6	1.2	6.7	4.0	78.15
		248	0.1	4.5	1.1	4.5	0.1	82.32
		24	0.0	5.6	0.4	5.7	0.0	85.76
		36	4.3	9.3	0.5	9.4	4.3	-85.76
	Min	Cent	0.1	0.4	-0.6	0.9	-0.4	-51.29
		247	0.9	-1.4	-0.4	1.0	-1.4	-0.04
		248	-0.2	-0.8	-0.7	-0.2	-0.9	-18.04
		24	-0.7	-1.4	-1.0	-0.0	-2.1	-38.99
		36	-0.1	0.5	-0.7	0.9	-0.6	-57.22

		NODE	Vxx	Vyy
	Max	Cent	7.5	3.5
		247	7.5	8.3
		248	7.5	3.5
		24	7.5	3.5
		36	7.5	8.3
	Min	Cent	0.4	-7.9
		247	1.4	-15.8
		248	1.4	-4.8
		24	-0.6	-4.8
		36	-0.6	-15.8

LC		NODE	Fxx	Fyy	Fxy	Fmax	Fmin	ANGLE
RC ENV~2	Max	Cent	0.3	1.5	0.4	1.5	0.1	83.46
		247	0.2	0.9	0.4	1.0	0.1	72.32
		248	0.2	2.1	0.4	2.2	0.2	84.47
		24	0.3	2.1	0.4	2.1	0.1	85.60
		36	0.3	0.9	0.4	1.0	0.0	78.30
	Min	Cent	-0.4	0.4	-0.3	0.6	-0.4	-72.39
		247	-0.1	0.1	-0.3	0.4	-0.2	-56.36
		248	-0.1	0.6	-0.3	0.8	-0.1	-61.25
		24	-0.7	0.6	-0.3	0.8	-0.7	-58.43
		36	-0.7	0.1	-0.3	0.4	-0.7	-60.85

		NODE	Mxx	Myy	Mxy	Mmax	Mmin	ANGLE
	Max	Cent	1.4	4.2	0.4	4.2	1.4	88.70
		247	3.1	3.6	0.7	3.8	2.9	61.67
		248	0.0	3.0	0.5	3.0	0.0	85.83
		24	-0.3	3.7	-0.0	3.8	-0.4	-83.51
		36	3.1	6.8	0.2	6.8	3.1	-85.88
	Min	Cent	0.8	2.5	-0.1	2.5	0.8	78.12
		247	1.9	2.5	0.2	2.7	1.7	62.01
		248	-0.1	1.7	-0.0	1.7	-0.2	83.43
		24	-0.5	1.3	-0.6	1.3	-0.5	-88.95
		36	1.6	3.9	-0.3	3.9	1.6	85.87

		NODE	Vxx	Vyy
	Max	Cent	5.3	-0.7
		247	5.4	-2.1
		248	5.4	0.8
		24	5.3	0.8
		36	5.3	-2.1
	Min	Cent	3.0	-4.6
		247	3.3	-6.9
		248	3.3	-2.4
		24	2.7	-2.4
		36	2.7	-6.9

ELEM	MAT	SEC	LC		NODE	Fxx	Fyy	Fxy	Fmax	Fmin	ANGLE
351	1	1	SX (RS)		Cent	3.5	1.0	1.1	3.9	0.6	21.06
					109	4.2	1.4	1.1	4.6	1.0	19.73
					110	4.2	0.6	1.1	4.5	0.2	15.98
					402	2.8	0.6	1.1	3.3	0.1	22.60
					401	2.8	1.4	1.1	3.4	0.8	29.40

		NODE	Mxx	Myy	Mxy	Mmax	Mmin	ANGLE
		Cent	5.0	1.0	0.6	5.1	0.9	8.32
		109	6.5	2.9	0.6	6.6	2.8	9.65
		110	3.9	0.9	0.6	4.0	0.8	10.07
		402	4.5	1.0	0.7	4.6	0.8	10.33
		401	5.1	0.8	0.7	5.3	0.7	9.46

	NODE	Vxx	Vyy
	Cent	2.9	3.3
	109	4.0	6.5
	110	4.0	0.1
	402	1.8	0.1
	401	1.8	6.5

LC		NODE	Fxx	Fyy	Fxy	Fmax	Fmin	ANGLE
SY (RS)		Cent	0.6	0.5	1.4	1.9	-0.8	43.13
		109	0.9	0.6	1.4	2.2	-0.6	41.78
		110	0.9	0.7	1.4	2.2	-0.6	42.17
		402	0.5	0.7	1.4	2.0	-0.8	47.13
		401	0.5	0.6	1.4	1.9	-0.8	46.74

	NODE	Mxx	Myy	Mxy	Mmax	Mmin	ANGLE
	Cent	0.6	1.4	1.1	2.2	-0.2	55.14
	109	0.9	2.8	0.8	3.1	0.6	69.79
	110	1.0	2.3	0.8	2.7	0.6	63.48
	402	0.4	2.1	1.3	2.8	-0.3	61.06
	401	1.3	3.7	1.3	4.3	0.7	66.61

	NODE	Vxx	Vyy
	Cent	0.3	5.6
	109	1.0	11.5
	110	1.0	0.3
	402	1.7	0.3
	401	1.7	11.5

LC		NODE	Fxx	Fyy	Fxy	Fmax	Fmin	ANGLE
RC ENV~1	Max	Cent	3.9	1.2	1.8	4.7	0.5	24.87
		109	4.6	1.5	1.8	5.3	0.8	22.77
		110	4.6	1.1	1.8	5.2	0.4	20.84
		402	3.3	1.1	1.8	4.1	0.2	27.31
		401	3.3	1.5	1.8	4.2	0.5	30.20
	Min	Cent	-3.0	-0.8	-0.9	-0.6	-3.2	-75.00
		109	-3.8	-1.4	-0.9	-1.2	-3.9	-75.35
		110	-3.8	-0.2	-0.9	0.0	-3.9	-80.05
		402	-2.3	-0.2	-0.9	0.1	-2.5	-74.60
		401	-2.3	-1.4	-0.9	-1.1	-2.7	-62.43

	NODE	Mxx	Myy	Mxy	Mmax	Mmin	ANGLE
Max	Cent	6.2	6.4	0.8	6.9	5.3	-66.37
	109	10.0	12.4	0.7	12.6	9.5	-78.05
	110	3.2	6.5	0.8	6.6	3.0	82.41
	402	3.5	4.4	0.7	4.5	3.3	81.47
	401	8.1	7.3	0.7	8.1	4.4	1.58
Min	Cent	-3.8	2.9	-1.7	3.5	-3.9	-82.59
	109	-3.0	4.4	-1.2	4.5	-3.1	-84.44
	110	-4.7	1.8	-0.9	2.0	-4.7	-77.51
	402	-5.4	0.3	-2.0	1.5	-5.6	-57.05
	401	-2.2	-0.1	-2.3	2.9	-2.5	-32.64

	NODE	Vxx	Vyy
Max	Cent	12.0	10.8
	109	12.6	18.3
	110	12.6	5.2
	402	11.4	5.2
	401	11.4	18.3
Min	Cent	3.5	-0.5
	109	2.4	-4.6
	110	2.4	3.1
	402	4.6	3.1
	401	4.6	-4.6

LC		NODE	Fxx	Fyy	Fxy	Fmax	Fmin	ANGLE
RC ENV~2	Max	Cent	2.1	0.7	1.0	2.4	-0.1	20.70
		109	2.3	0.6	1.0	2.6	-0.3	16.87

	110	2.3	0.8	1.0	2.7	0.0	21.87
	402	1.8	0.8	1.0	2.3	-0.0	26.19
	401	1.8	0.6	1.0	2.2	-0.2	19.63
Min	Cent	-1.1	-0.2	0.1	0.5	-1.1	79.07
	109	-1.5	-0.5	0.1	0.4	-1.5	80.09
	110	-1.5	0.2	0.1	0.6	-1.5	81.43
	402	-0.8	0.2	0.1	0.6	-0.8	77.83
	401	-0.8	-0.5	0.1	0.4	-0.9	75.07

	NODE	Mxx	Myy	Mxy	Mmax	Mmin	ANGLE
Max	Cent	2.9	4.9	-0.3	5.2	2.7	-69.08
	109	6.0	9.2	-0.1	9.3	5.9	-79.84
	110	0.2	4.5	-0.0	4.5	0.2	-87.09
	402	0.4	2.6	-0.5	2.9	0.1	-71.45
	401	5.0	4.1	-0.6	5.7	3.0	-28.93
Min	Cent	-0.7	4.1	-1.1	4.2	-0.8	-84.21
	109	1.2	6.3	-0.8	6.3	1.2	-87.09
	110	-2.5	3.8	-0.6	3.8	-2.5	-84.88
	402	-2.8	1.8	-1.4	2.1	-3.0	-78.71
	401	1.2	3.3	-1.6	3.9	0.8	-65.81

	NODE	Vxx	Vyy
Max	Cent	8.8	7.3
	109	9.2	10.8
	110	9.2	3.9
	402	8.4	3.9
	401	8.4	10.8
Min	Cent	5.7	3.8
	109	5.2	4.3
	110	5.2	3.4
	402	6.1	3.4
	401	6.1	4.3

ELEM	MAT	SEC	LC	NODE	Fxx	Fyy	Fxy	Fmax	Fmin	ANGLE
352	1	1	SX (RS)	Cent	2.2	0.6	0.7	2.5	0.3	20.07
				110	2.5	0.8	0.7	2.8	0.5	19.74
				111	2.5	0.3	0.7	2.7	0.1	16.38
				403	2.0	0.3	0.7	2.2	0.1	20.49
				402	2.0	0.8	0.7	2.3	0.5	25.47

	NODE	Mxx	Myy	Mxy	Mmax	Mmin	ANGLE
	Cent	3.8	0.7	0.5	3.8	0.7	8.94
	110	4.3	1.0	0.5	4.4	0.9	8.77
	111	3.3	0.6	0.5	3.4	0.6	9.62
	403	3.2	0.5	0.4	3.3	0.4	8.99
	402	4.3	0.9	0.5	4.4	0.8	8.52

	NODE	Vxx	Vyy
	Cent	1.7	0.2
	110	1.7	0.1
	111	1.7	0.3
	403	1.8	0.3
	402	1.8	0.1

LC	NODE	Fxx	Fyy	Fxy	Fmax	Fmin	ANGLE
SY (RS)	Cent	0.8	0.4	1.2	1.8	-0.6	39.35
	110	1.0	0.6	1.2	2.0	-0.4	40.41
	111	1.0	0.4	1.2	1.9	-0.5	37.84
	403	0.7	0.4	1.2	1.7	-0.6	41.42
	402	0.7	0.6	1.2	1.9	-0.5	44.09

	NODE	Mxx	Myy	Mxy	Mmax	Mmin	ANGLE
	Cent	0.8	1.9	1.1	2.6	0.1	58.31
	110	1.0	2.3	1.3	3.1	0.2	58.28
	111	1.1	1.5	1.2	2.5	0.1	49.26
	403	0.7	1.9	1.0	2.4	0.1	60.91
	402	0.5	2.1	1.0	2.6	0.0	64.21

	NODE	Vxx	Vyy

		Cent	0.5	0.4
		110	0.6	0.3
		111	0.6	1.0
		403	0.5	1.0
		402	0.5	0.3

LC		NODE	Fxx	Fyy	Fxy	Fmax	Fmin	ANGLE
RC ENV~1	Max	Cent	2.5	0.9	1.5	3.0	0.4	25.65
		110	2.8	1.2	1.5	3.4	0.7	26.09
		111	2.8	0.6	1.5	3.2	0.1	20.88
		403	2.2	0.6	1.5	2.7	0.0	25.29
		402	2.2	1.2	1.5	2.9	0.6	32.22
	Min	Cent	-1.9	-0.3	-0.9	-0.2	-2.0	-78.02
		110	-2.2	-0.4	-0.9	-0.3	-2.3	-78.81
		111	-2.2	-0.2	-0.9	-0.1	-2.3	-80.03
		403	-1.7	-0.2	-0.9	-0.0	-1.8	-77.07
		402	-1.7	-0.4	-0.9	-0.3	-1.8	-75.02

		NODE	Mxx	Myy	Mxy	Mmax	Mmin	ANGLE
	Max	Cent	1.3	4.6	0.7	4.6	1.3	83.62
		110	4.5	6.7	1.0	6.8	4.4	79.86
		111	-2.0	3.1	1.0	3.2	-2.0	81.94
		403	-0.7	4.0	0.6	4.1	-0.7	85.49
		402	3.4	4.5	0.5	4.5	3.3	84.10
	Min	Cent	-6.2	0.7	-1.5	1.2	-6.3	-71.38
		110	-4.1	2.0	-1.6	2.7	-4.2	-66.30
		111	-9.5	0.1	-1.3	0.4	-9.6	-78.79
		403	-7.5	0.3	-1.4	0.7	-7.7	-75.40
		402	-5.2	0.2	-1.7	1.2	-5.3	-58.67

		NODE	Vxx	Vyy
	Max	Cent	11.2	2.6
		110	13.5	5.2
		111	13.5	0.4
		403	8.9	0.4
		402	8.9	5.2
	Min	Cent	5.3	1.0
		110	7.1	3.1
		111	7.1	-1.6
		403	3.5	-1.6
		402	3.5	3.1

LC		NODE	Fxx	Fyy	Fxy	Fmax	Fmin	ANGLE
RC ENV~2	Max	Cent	1.4	0.6	0.6	1.6	-0.0	21.91
		110	1.5	0.9	0.6	1.7	0.1	20.70
		111	1.5	0.3	0.6	1.7	-0.0	20.21
		403	1.2	0.3	0.6	1.5	-0.1	23.22
		402	1.2	0.9	0.6	1.5	0.0	23.85
	Min	Cent	-0.8	0.1	0.2	0.5	-0.8	76.08
		110	-0.8	0.1	0.2	0.6	-0.8	61.63
		111	-0.8	0.1	0.2	0.3	-0.8	82.23
		403	-0.7	0.1	0.2	0.3	-0.7	81.21
		402	-0.7	0.1	0.2	0.6	-0.7	62.06

		NODE	Mxx	Myy	Mxy	Mmax	Mmin	ANGLE
	Max	Cent	-1.5	2.8	-0.4	2.9	-1.6	-81.99
		110	1.4	4.7	-0.3	4.8	1.4	-81.86
		111	-4.7	1.7	-0.1	1.7	-4.7	-87.17
		403	-3.3	2.2	-0.4	2.2	-3.3	-86.15
		402	0.4	2.6	-0.5	2.8	0.1	-72.28
	Min	Cent	-4.2	2.1	-1.0	2.3	-4.3	-81.33
		110	-1.6	4.0	-0.9	4.1	-1.7	-83.59
		111	-7.0	1.1	-0.7	1.2	-7.1	-85.38
		403	-5.5	1.6	-1.0	1.7	-5.6	-82.67
		402	-2.7	1.8	-1.2	2.1	-2.8	-75.82

		NODE	Vxx	Vyy
	Max	Cent	8.4	1.9
		110	10.1	3.9
		111	10.1	-0.1
		403	6.6	-0.1

		402	6.6	3.9
	Min	Cent	6.6	1.4
		110	8.3	3.4
		111	8.3	-0.7
		403	4.8	-0.7
		402	4.8	3.4

ELEM	MAT	SEC	LC		NODE	Fxx	Fyy	Fxy	Fmax	Fmin	ANGLE
353	1	1	SX	(RS)	Cent	1.4	0.3	0.7	1.7	-0.0	24.43
					111	1.6	0.5	0.7	1.9	0.2	24.56
					112	1.6	0.1	0.7	1.8	-0.1	20.98
					404	1.2	0.1	0.7	1.5	-0.2	24.88
					403	1.2	0.5	0.7	1.6	0.1	29.52

	NODE	Mxx	Myy	Mxy	Mmax	Mmin	ANGLE
	Cent	2.8	0.4	0.3	2.8	0.4	7.70
	111	3.4	0.6	0.4	3.4	0.6	7.58
	112	2.3	0.4	0.3	2.3	0.3	8.16
	404	2.3	0.3	0.3	2.3	0.3	8.08
	403	3.2	0.5	0.4	3.3	0.4	7.51

	NODE	Vxx	Vyy
	Cent	1.8	0.2
	111	1.8	0.3
	112	1.8	0.1
	404	1.7	0.1
	403	1.7	0.3

LC		NODE	Fxx	Fyy	Fxy	Fmax	Fmin	ANGLE
SY	(RS)	Cent	1.1	0.4	0.9	1.8	-0.3	34.63
		111	1.3	0.4	0.9	1.9	-0.2	32.24
		112	1.3	0.4	0.9	1.9	-0.2	32.10
		404	0.9	0.4	0.9	1.6	-0.3	37.21
		403	0.9	0.4	0.9	1.6	-0.3	37.38

	NODE	Mxx	Myy	Mxy	Mmax	Mmin	ANGLE
	Cent	1.0	1.7	1.1	2.5	0.2	54.76
	111	1.1	1.5	1.1	2.4	0.2	49.58
	112	1.2	1.7	1.1	2.6	0.3	51.29
	404	0.8	1.9	1.0	2.5	0.1	58.76
	403	0.8	1.9	1.0	2.5	0.2	59.09

	NODE	Vxx	Vyy
	Cent	0.4	0.7
	111	0.5	1.0
	112	0.5	0.5
	404	0.2	0.5
	403	0.2	1.0

LC		NODE	Fxx	Fyy	Fxy	Fmax	Fmin	ANGLE
RC ENV~1	Max	Cent	1.6	0.6	1.1	2.1	0.0	36.03
		111	1.8	0.6	1.1	2.3	0.2	33.68
		112	1.8	0.6	1.1	2.3	0.1	33.70
		404	1.4	0.6	1.1	2.0	0.1	38.52
		403	1.4	0.6	1.1	2.0	0.1	38.51
	Min	Cent	-1.2	-0.2	-0.7	0.0	-1.4	-70.43
		111	-1.4	-0.3	-0.7	-0.1	-1.5	-69.96
		112	-1.4	-0.2	-0.7	0.2	-1.5	-73.64
		404	-1.1	-0.2	-0.7	0.2	-1.3	-70.30
		403	-1.1	-0.3	-0.7	-0.1	-1.3	-65.16

	NODE	Mxx	Myy	Mxy	Mmax	Mmin	ANGLE
Max	Cent	-2.2	3.4	1.3	3.6	-2.3	80.62
	111	-1.2	3.2	1.2	3.4	-1.2	79.88
	112	-3.8	2.7	1.5	3.0	-3.9	79.13
	404	-3.2	3.5	1.3	3.7	-3.2	81.25
	403	-0.6	4.1	1.0	4.2	-0.7	82.18
Min	Cent	-8.9	-0.1	-0.9	0.0	-8.9	-81.57

111	-8.5	0.3	-1.0	0.4	-8.5	-81.05
112	-10.3	-0.7	-0.8	-0.6	-10.3	-83.41
404	-9.3	-0.2	-0.8	-0.1	-9.3	-82.41
403	-7.5	0.3	-1.0	0.5	-7.5	-79.06

	NODE	Vxx	Vyy
Max	Cent	4.5	-0.1
	111	4.5	0.4
	112	4.5	-0.5
	404	4.5	-0.5
	403	4.5	0.4
Min	Cent	0.8	-1.5
	111	0.7	-1.6
	112	0.7	-1.4
	404	0.9	-1.4
	403	0.9	-1.6

LC		NODE	Fxx	Fyy	Fxy	Fmax	Fmin	ANGLE
RC ENV~2	Max	Cent	0.9	0.3	0.4	1.1	0.0	20.75
		111	1.0	0.4	0.4	1.1	0.0	18.18
		112	1.0	0.3	0.4	1.1	0.1	20.97
		404	0.9	0.3	0.4	1.0	0.1	23.96
		403	0.9	0.4	0.4	1.0	-0.0	20.52
	Min	Cent	-0.5	0.1	0.1	0.2	-0.5	77.31
		111	-0.6	0.0	0.1	0.3	-0.6	78.33
		112	-0.6	0.2	0.1	0.2	-0.6	84.03
		404	-0.5	0.2	0.1	0.2	-0.5	83.67
		403	-0.5	0.0	0.1	0.3	-0.5	78.14

	NODE	Mxx	Myy	Mxy	Mmax	Mmin	ANGLE
Max	Cent	-4.6	1.6	0.2	1.6	-4.6	88.38
	111	-3.9	1.8	0.1	1.8	-3.9	-89.75
	112	-5.9	1.0	0.4	1.0	-5.9	87.07
	404	-5.2	1.6	0.2	1.6	-5.2	88.11
	403	-3.3	2.2	-0.0	2.2	-3.3	-89.98
Min	Cent	-6.6	1.1	-0.2	1.1	-6.6	-88.30
	111	-6.2	1.3	-0.3	1.3	-6.2	-87.73
	112	-7.7	0.5	0.0	0.5	-7.7	89.79
	404	-6.9	0.9	-0.2	0.9	-6.9	-88.82
	403	-5.5	1.6	-0.5	1.6	-5.5	-86.26

	NODE	Vxx	Vyy
Max	Cent	3.3	-0.3
	111	3.3	-0.1
	112	3.3	-0.6
	404	3.3	-0.6
	403	3.3	-0.1
Min	Cent	2.0	-0.8
	111	2.0	-0.7
	112	2.0	-1.0
	404	2.1	-1.0
	403	2.1	-0.7

ELEM	MAT	SEC	LC		NODE	Fxx	Fyy	Fxy	Fmax	Fmin	ANGLE
354	1	1	SX (RS)		Cent	0.8	0.1	0.7	1.2	-0.3	32.63
					112	0.9	0.2	0.7	1.3	-0.2	32.20
					113	0.9	0.2	0.7	1.3	-0.2	31.84
					405	0.7	0.2	0.7	1.2	-0.3	35.52
					404	0.7	0.2	0.7	1.2	-0.3	35.92

	NODE	Mxx	Myy	Mxy	Mmax	Mmin	ANGLE
	Cent	1.8	0.3	0.2	1.8	0.3	5.72
	112	2.4	0.4	0.2	2.4	0.4	5.80
	113	1.2	0.3	0.1	1.2	0.3	7.95
	405	1.3	0.2	0.1	1.3	0.2	5.71
	404	2.3	0.3	0.2	2.3	0.3	5.35

	NODE	Vxx	Vyy
	Cent	1.9	0.2
	112	2.0	0.1

	113	2.0	0.3	
	405	1.8	0.3	
	404	1.8	0.1	

LC		NODE	Fxx	Fyy	Fxy	Fmax	Fmin	ANGLE
SY (RS)		Cent	1.4	0.4	0.9	1.9	-0.1	30.97
		112	1.6	0.4	0.9	2.1	-0.1	28.34
		113	1.6	0.4	0.9	2.1	-0.1	28.38
		405	1.2	0.4	0.9	1.8	-0.2	33.93
		404	1.2	0.4	0.9	1.8	-0.2	33.89

	NODE	Mxx	Myy	Mxy	Mmax	Mmin	ANGLE
	Cent	0.9	1.8	1.2	2.6	0.1	54.12
	112	1.2	1.7	1.2	2.7	0.2	50.86
	113	1.0	1.4	1.3	2.5	-0.1	48.49
	405	0.8	2.1	1.2	2.9	0.1	59.16
	404	0.8	1.8	1.1	2.6	0.1	57.13

	NODE	Vxx	Vyy
	Cent	0.6	1.0
	112	0.9	0.5
	113	0.9	1.6
	405	0.4	1.6
	404	0.4	0.5

LC		NODE	Fxx	Fyy	Fxy	Fmax	Fmin	ANGLE
RC ENV~1	Max	Cent	1.5	0.6	1.0	2.1	0.3	32.48
		112	1.8	0.6	1.0	2.3	0.2	29.48
		113	1.8	0.6	1.0	2.3	0.4	29.91
		405	1.3	0.6	1.0	2.0	0.3	35.87
		404	1.3	0.6	1.0	2.0	0.2	35.34
	Min	Cent	-1.3	-0.2	-0.9	0.2	-1.7	-87.19
		112	-1.5	-0.2	-0.9	0.2	-1.9	-62.90
		113	-1.5	-0.2	-0.9	0.2	-1.9	-83.94
		405	-1.1	-0.2	-0.9	0.2	-1.6	-84.19
		404	-1.1	-0.2	-0.9	0.2	-1.6	65.09

		NODE	Mxx	Myy	Mxy	Mmax	Mmin	ANGLE
	Max	Cent	-3.7	3.2	1.9	3.6	-3.9	77.24
		112	-3.7	2.7	1.7	3.0	-3.8	77.97
		113	-4.3	2.8	2.0	3.3	-4.4	75.62
		405	-3.8	3.9	2.0	4.3	-3.9	77.00
		404	-3.1	3.5	1.7	3.8	-3.2	78.65
	Min	Cent	-9.1	-0.3	-0.6	-0.3	-9.1	-84.42
		112	-10.2	-0.7	-0.7	-0.6	-10.2	-83.81
		113	-8.8	0.0	-0.6	0.1	-8.9	-84.72
		405	-8.1	-0.4	-0.5	-0.4	-8.2	-84.98
		404	-9.1	-0.2	-0.6	-0.2	-9.2	-84.48

		NODE	Vxx	Vyy
	Max	Cent	1.3	0.3
		112	1.2	-0.5
		113	1.2	1.1
		405	1.3	1.1
		404	1.3	-0.5
	Min	Cent	-2.5	-1.8
		112	-2.7	-1.4
		113	-2.7	-2.1
		405	-2.3	-2.1
		404	-2.3	-1.4

LC		NODE	Fxx	Fyy	Fxy	Fmax	Fmin	ANGLE
RC ENV~2	Max	Cent	0.6	0.3	0.2	0.7	0.2	22.12
		112	0.6	0.3	0.2	0.7	0.1	18.15
		113	0.6	0.4	0.2	0.7	0.2	23.48
		405	0.6	0.4	0.2	0.7	0.2	27.66
		404	0.6	0.3	0.2	0.6	0.1	20.89
	Min	Cent	-0.4	0.2	-0.0	0.2	-0.4	-88.83
		112	-0.3	0.1	-0.0	0.2	-0.4	-88.82

113	-0.3	0.1	-0.0	0.1	-0.4	-85.15
405	-0.4	0.1	-0.0	0.1	-0.4	-85.39
404	-0.4	0.1	-0.0	0.2	-0.4	63.45

	NODE	Mxx	Myy	Mxy	Mmax	Mmin	ANGLE
Max	Cent	-5.4	1.5	0.6	1.5	-5.5	85.01
	112	-5.9	1.0	0.5	1.0	-5.9	86.19
	113	-5.5	1.5	0.7	1.5	-5.6	85.95
	405	-5.0	1.8	0.8	1.8	-5.1	83.88
	404	-5.2	1.6	0.6	1.7	-5.2	85.65
Min	Cent	-6.8	0.8	0.3	0.9	-6.8	86.85
	112	-7.6	0.5	0.2	0.5	-7.6	88.39
	113	-6.6	0.9	0.4	0.9	-6.6	86.06
	405	-6.1	1.0	0.5	1.1	-6.1	85.30
	404	-6.8	0.9	0.2	1.0	-6.8	87.83

	NODE	Vxx	Vyy
Max	Cent	-0.1	-0.3
	112	-0.2	-0.6
	113	-0.2	0.0
	405	0.0	0.0
	404	0.0	-0.6
Min	Cent	-1.5	-0.7
	112	-1.6	-1.0
	113	-1.6	-0.5
	405	-1.3	-0.5
	404	-1.3	-1.0

ELEM	MAT	SEC	LC	NODE	Fxx	Fyy	Fxy	Fmax	Fmin	ANGLE
355	1	1	SX (RS)	Cent	0.4	0.2	0.8	1.1	-0.5	41.84
				113	0.5	0.1	0.8	1.1	-0.5	39.14
				114	0.5	0.3	0.8	1.2	-0.4	42.30
				406	0.3	0.3	0.8	1.1	-0.5	45.49
				405	0.3	0.1	0.8	1.0	-0.6	42.27

NODE	Mxx	Myy	Mxy	Mmax	Mmin	ANGLE
Cent	0.7	0.3	0.1	0.7	0.3	10.10
113	1.3	0.3	0.1	1.3	0.3	6.23
114	0.3	0.6	0.1	0.6	0.3	72.53
406	0.5	0.5	0.1	0.6	0.4	45.08
405	1.3	0.2	0.0	1.3	0.2	1.77

NODE	Vxx	Vyy
Cent	2.1	0.3
113	2.1	0.3
114	2.1	0.3
406	2.1	0.3
405	2.1	0.3

LC	NODE	Fxx	Fyy	Fxy	Fmax	Fmin	ANGLE
SY (RS)	Cent	1.6	0.6	1.1	2.3	-0.1	32.18
	113	1.9	0.4	1.1	2.5	-0.2	28.58
	114	1.9	0.9	1.1	2.6	0.2	32.89
	406	1.4	0.9	1.1	2.3	-0.0	38.82
	405	1.4	0.4	1.1	2.1	-0.3	33.73

NODE	Mxx	Myy	Mxy	Mmax	Mmin	ANGLE
Cent	1.0	2.3	1.6	3.4	-0.1	55.73
113	1.1	1.4	1.8	3.0	-0.5	47.51
114	1.1	3.0	2.0	4.3	-0.1	57.95
406	1.2	2.7	1.5	3.6	0.3	58.31
405	0.9	2.1	1.3	2.9	0.1	57.09

NODE	Vxx	Vyy
Cent	1.3	0.6
113	1.5	1.6
114	1.5	0.5
406	1.1	0.5
405	1.1	1.6

LC		NODE	Fxx	Fyy	Fxy	Fmax	Fmin	ANGLE
RC ENV~1	Max	Cent	1.7	0.9	1.1	2.4	0.4	34.11
		113	2.0	0.6	1.1	2.6	0.3	28.75
		114	2.0	1.3	1.1	2.8	0.5	35.92
		406	1.4	1.3	1.1	2.4	0.4	43.23
		405	1.4	0.6	1.1	2.2	0.3	34.82
	Min	Cent	-1.6	-0.3	-1.2	0.4	-2.3	-73.91
		113	-1.8	-0.3	-1.2	0.3	-2.5	-63.23
		114	-1.8	-0.5	-1.2	0.2	-2.5	-59.59
		406	-1.3	-0.5	-1.2	0.3	-2.2	-54.90
		405	-1.3	-0.3	-1.2	0.3	-2.1	35.28

		NODE	Mxx	Myy	Mxy	Mmax	Mmin	ANGLE
	Max	Cent	-3.4	4.3	2.7	5.2	-3.8	72.55
		113	-4.6	2.7	2.6	3.5	-4.8	72.83
		114	-2.2	5.7	3.0	6.7	-3.2	71.19
		406	-1.8	5.2	2.8	6.1	-2.8	70.77
		405	-3.9	3.8	2.3	4.4	-4.1	75.04
	Min	Cent	-6.7	-0.2	-0.5	-0.2	-6.8	-84.16
		113	-9.4	-0.1	-0.9	0.1	-9.5	-82.52
		114	-5.0	-0.4	-0.9	-0.2	-5.2	-77.75
		406	-4.5	-0.1	-0.2	-0.1	-4.8	-87.31
		405	-8.3	-0.4	-0.2	-0.3	-8.4	-87.98

		NODE	Vxx	Vyy
	Max	Cent	-1.9	0.8
		113	-2.1	1.1
		114	-2.1	1.5
		406	-1.6	1.5
		405	-1.6	1.1
	Min	Cent	-7.4	-0.6
		113	-7.8	-2.1
		114	-7.8	-0.2
		406	-7.0	-0.2
		405	-7.0	-2.1

LC		NODE	Fxx	Fyy	Fxy	Fmax	Fmin	ANGLE
RC ENV~2	Max	Cent	0.3	0.5	0.1	0.5	0.3	-72.38
		113	0.3	0.3	0.1	0.4	0.2	-64.49
		114	0.3	0.7	0.1	0.7	0.3	-85.41
		406	0.3	0.7	0.1	0.7	0.3	-86.24
		405	0.3	0.3	0.1	0.4	0.2	-69.83
	Min	Cent	-0.2	0.2	-0.2	0.3	-0.3	-74.24
		113	-0.1	0.2	-0.2	0.2	-0.2	13.04
		114	-0.1	0.3	-0.2	0.4	-0.2	-71.57
		406	-0.2	0.3	-0.2	0.4	-0.3	-73.82
		405	-0.2	0.2	-0.2	0.2	-0.3	64.61

		NODE	Mxx	Myy	Mxy	Mmax	Mmin	ANGLE
	Max	Cent	-4.3	2.2	1.1	2.3	-4.5	82.39
		113	-5.9	1.4	0.8	1.4	-6.0	85.22
		114	-3.3	2.9	1.1	3.1	-3.5	82.02
		406	-2.9	2.7	1.3	2.9	-3.2	78.87
		405	-5.2	1.7	1.1	1.9	-5.3	81.62
	Min	Cent	-5.0	1.5	0.9	1.6	-5.1	80.93
		113	-7.0	0.8	0.6	0.9	-7.1	84.41
		114	-3.8	2.2	0.9	2.4	-3.9	79.89
		406	-3.4	1.8	1.1	2.1	-3.6	76.28
		405	-6.2	1.0	0.9	1.1	-6.3	82.14

		NODE	Vxx	Vyy
	Max	Cent	-3.7	0.5
		113	-3.9	0.0
		114	-3.9	1.0
		406	-3.4	1.0
		405	-3.4	0.0
	Min	Cent	-5.4	-0.1
		113	-5.7	-0.5
		114	-5.7	0.4
		406	-5.1	0.4

			405	-5.1	-0.5

ELEM	MAT	SEC	LC		NODE	Fxx	Fyy	Fxy	Fmax	Fmin	ANGLE
356	1	1	SX	(RS)	Cent	1.0	0.4	1.1	1.8	-0.4	36.81
					114	1.3	0.2	1.1	1.9	-0.5	30.82
					115	1.3	0.6	1.1	2.1	-0.1	36.30
					407	0.7	0.6	1.1	1.8	-0.4	43.91
					406	0.7	0.2	1.1	1.5	-0.7	37.59

	NODE	Mxx	Myy	Mxy	Mmax	Mmin	ANGLE
	Cent	0.9	0.7	0.2	1.0	0.6	30.75
	114	0.4	0.6	0.1	0.6	0.3	57.53
	115	2.2	2.1	0.2	2.3	1.9	35.11
	407	1.4	0.4	0.2	1.5	0.3	12.09
	406	0.4	0.5	0.2	0.6	0.3	49.68

	NODE	Vxx	Vyy
	Cent	3.3	2.3
	114	4.0	0.3
	115	4.0	4.3
	407	2.6	4.3
	406	2.6	0.3

LC		NODE	Fxx	Fyy	Fxy	Fmax	Fmin	ANGLE
SY	(RS)	Cent	1.8	0.5	1.3	2.6	-0.3	30.93
		114	2.0	0.9	1.3	2.9	0.1	33.87
		115	2.0	0.6	1.3	2.8	-0.2	30.96
		407	1.8	0.6	1.3	2.6	-0.2	32.89
		406	1.8	0.9	1.3	2.7	-0.0	35.97

	NODE	Mxx	Myy	Mxy	Mmax	Mmin	ANGLE
	Cent	1.4	1.2	1.7	3.0	-0.3	43.27
	114	1.1	3.0	0.9	3.4	0.8	69.07
	115	3.4	6.7	0.8	6.9	3.2	77.18
	407	1.1	5.6	2.0	6.4	0.4	69.05
	406	1.8	2.5	2.1	4.3	0.0	50.02

	NODE	Vxx	Vyy
	Cent	0.5	10.7
	114	2.1	0.5
	115	2.1	22.0
	407	3.0	22.0
	406	3.0	0.5

LC		NODE	Fxx	Fyy	Fxy	Fmax	Fmin	ANGLE
RC ENV~1	Max	Cent	1.9	0.7	1.1	2.6	0.1	31.44
		114	2.0	1.3	1.1	2.8	0.5	36.75
		115	2.0	0.8	1.1	2.7	0.1	30.61
		407	1.9	0.8	1.1	2.6	0.1	32.06
		406	1.9	1.3	1.1	2.7	0.4	38.46
	Min	Cent	-1.8	-0.2	-1.5	0.4	-2.7	-85.00
		114	-2.0	-0.5	-1.5	0.4	-2.9	-58.20
		115	-2.0	-0.5	-1.5	0.3	-2.9	-55.88
		407	-1.7	-0.5	-1.5	0.3	-2.7	-81.65
		406	-1.7	-0.5	-1.5	0.5	-2.7	-55.85

		NODE	Mxx	Myy	Mxy	Mmax	Mmin	ANGLE
	Max	Cent	0.3	5.7	3.3	7.0	-0.8	63.36
		114	-3.6	5.4	1.9	5.8	-4.0	78.61
		115	6.0	15.0	2.0	15.4	5.6	78.03
		407	2.7	8.7	4.0	10.6	0.5	64.91
		406	-1.3	5.0	3.9	6.9	-3.1	64.36
	Min	Cent	-2.5	2.8	-0.0	2.8	-2.6	-89.77
		114	-7.0	-0.7	0.1	-0.7	-7.1	88.38
		115	-0.9	1.6	0.4	1.7	-0.9	80.39
		407	-0.7	-2.6	0.0	-0.4	-2.6	0.89
		406	-4.8	-0.0	-0.2	0.0	-5.4	-87.23

	NODE	Vxx	Vyy
Max	Cent	-5.5	15.6
	114	-6.9	1.5
	115	-6.9	31.3
	407	-3.7	31.3
	406	-3.7	1.5
Min	Cent	-14.9	-5.9
	114	-18.0	-0.2
	115	-18.0	-12.6
	407	-11.8	-12.6
	406	-11.8	-0.2

LC		NODE	Fxx	Fyy	Fxy	Fmax	Fmin	ANGLE
RC ENV~2	Max	Cent	0.1	0.5	0.0	0.7	-0.0	-55.83
		114	0.1	0.7	0.0	0.9	-0.1	-62.23
		115	0.1	0.4	0.0	0.5	-0.1	-47.16
		407	0.1	0.4	0.0	0.5	0.1	-48.08
		406	0.1	0.7	0.0	0.9	0.1	-62.85
	Min	Cent	-0.0	0.2	-0.4	0.3	-0.3	-81.71
		114	-0.1	0.4	-0.4	0.4	-0.1	-84.17
		115	-0.1	-0.0	-0.4	0.2	-0.4	-64.66
		407	0.0	-0.0	-0.4	0.3	-0.4	-75.96
		406	0.0	0.4	-0.4	0.4	-0.2	-81.47

	NODE	Mxx	Myy	Mxy	Mmax	Mmin	ANGLE
Max	Cent	-0.6	4.4	1.8	4.8	-1.2	73.16
	114	-4.7	2.7	1.0	2.8	-4.8	83.27
	115	3.9	9.8	1.3	10.0	3.6	78.23
	407	1.9	3.2	2.4	4.6	0.1	49.80
	406	-3.0	2.7	2.0	3.1	-3.6	74.60
Min	Cent	-1.5	3.8	1.5	4.3	-1.9	74.41
	114	-5.2	1.9	0.9	2.1	-5.3	82.24
	115	1.9	7.9	1.1	8.1	1.7	79.10
	407	0.4	2.7	2.0	4.2	-0.7	59.99
	406	-3.5	1.8	1.7	2.5	-4.0	70.43

	NODE	Vxx	Vyy
Max	Cent	-8.4	6.9
	114	-10.3	1.0
	115	-10.3	12.9
	407	-6.5	12.9
	406	-6.5	1.0
Min	Cent	-11.1	4.5
	114	-13.4	0.4
	115	-13.4	8.5
	407	-8.7	8.5
	406	-8.7	0.4

ELEM	MAT	SEC	LC		NODE	Fxx	Fyy	Fxy	Fmax	Fmin	ANGLE
357	1	1	SX (RS)		Cent	2.5	0.1	2.4	4.0	-1.4	31.35
					115	5.8	0.3	2.4	6.7	-0.6	20.48
					6	5.8	0.5	2.4	6.7	-0.4	20.94
					408	0.7	0.5	2.4	3.0	-1.8	43.70
					407	0.7	0.3	2.4	2.9	-1.9	42.66

	NODE	Mxx	Myy	Mxy	Mmax	Mmin	ANGLE
	Cent	4.6	1.2	1.5	5.1	0.6	20.09
	115	2.1	2.0	0.7	2.7	1.4	43.00
	6	18.0	3.6	4.0	19.0	2.6	14.46
	408	3.4	0.7	4.2	6.4	-2.3	35.95
	407	1.7	0.3	0.5	1.9	0.2	18.65

	NODE	Vxx	Vyy
	Cent	9.5	2.2
	115	27.9	4.3
	6	27.9	0.0
	408	9.0	0.0
	407	9.0	4.3

LC		NODE	Fxx	Fyy	Fxy	Fmax	Fmin	ANGLE
SY (RS)		Cent	1.9	5.8	3.4	7.8	-0.1	60.17
		115	2.6	0.6	3.4	5.1	-1.9	37.02
		6	2.6	12.1	3.4	13.2	1.5	72.29
		408	1.4	12.1	3.4	13.1	0.4	73.85
		407	1.4	0.6	3.4	4.4	-2.4	41.86

		NODE	Mxx	Myy	Mxy	Mmax	Mmin	ANGLE
		Cent	0.9	10.7	3.4	11.8	-0.1	72.56
		115	2.7	6.5	8.6	13.4	-4.1	51.30
		6	2.3	35.4	7.8	37.1	0.6	77.44
		408	2.9	9.1	0.8	9.2	2.8	82.52
		407	2.7	4.9	0.1	4.9	2.7	87.38

		NODE	Vxx	Vyy
		Cent	0.8	14.4
		115	6.8	22.0
		6	6.8	50.7
		408	8.2	50.7
		407	8.2	22.0

LC		NODE	Fxx	Fyy	Fxy	Fmax	Fmin	ANGLE
RC ENV~1	Max	Cent	2.5	7.3	2.7	8.4	0.7	67.68
		115	6.0	0.8	2.7	6.5	0.0	15.64
		6	6.0	15.0	2.7	15.6	2.5	78.03
		408	1.2	15.0	2.7	15.5	0.6	79.31
		407	1.2	0.8	2.7	3.7	0.2	43.00
	Min	Cent	-2.6	-4.3	-4.1	1.2	-7.4	-36.57
		115	-5.6	-0.5	-4.1	0.3	-7.0	88.47
		6	-5.6	-9.3	-4.1	-0.5	-11.2	-24.88
		408	-1.6	-9.3	-4.1	0.2	-11.1	-23.40
		407	-1.6	-0.5	-4.1	0.3	-5.2	49.66

		NODE	Mxx	Myy	Mxy	Mmax	Mmin	ANGLE
	Max	Cent	9.7	16.2	5.6	18.6	6.1	66.96
		115	2.0	14.2	11.2	20.9	0.3	59.24
		6	31.2	47.1	9.5	49.7	20.1	74.46
		408	7.2	8.3	5.3	9.5	4.9	29.08
		407	5.2	8.3	3.4	9.3	3.7	64.41
	Min	Cent	-0.2	-5.2	-1.2	3.7	-5.4	-7.67
		115	-3.4	1.1	-5.9	5.2	-7.5	-55.44
		6	-4.8	-23.7	-6.0	8.5	-24.7	-80.49
		408	-0.3	-9.9	-3.0	0.2	-9.9	1.99
		407	-0.7	-1.6	1.5	0.9	-3.2	38.13

		NODE	Vxx	Vyy
	Max	Cent	-4.0	29.1
		115	4.4	31.3
		6	4.4	70.8
		408	5.6	70.8
		407	5.6	31.3
	Min	Cent	-26.5	0.3
		115	-51.4	-12.6
		6	-51.4	-30.6
		408	-12.4	-30.6
		407	-12.4	-12.6

LC		NODE	Fxx	Fyy	Fxy	Fmax	Fmin	ANGLE
RC ENV~2	Max	Cent	0.5	2.5	-0.1	3.3	-0.3	-63.18
		115	1.7	0.3	-0.1	2.7	-0.5	-31.00
		6	1.7	4.8	-0.1	5.4	1.0	-70.02
		408	0.2	4.8	-0.1	5.2	0.2	-75.54
		407	0.2	0.3	-0.1	1.3	0.1	-52.81
	Min	Cent	-0.6	1.3	-1.5	1.3	-0.6	-88.33
		115	-1.3	0.1	-1.5	0.2	-1.3	-87.89
		6	-1.3	2.4	-1.5	2.4	-1.3	-89.15
		408	-0.7	2.4	-1.5	2.4	-1.2	-88.61
		407	-0.7	0.1	-1.5	0.2	-1.9	-59.90

		NODE	Mxx	Myy	Mxy	Mmax	Mmin	ANGLE

Max	Cent	7.0	6.3	3.2	9.0	4.4	37.57
	115	-0.1	8.9	3.6	10.2	-1.0	70.90
	6	21.1	14.9	3.3	21.2	14.7	6.63
	408	5.2	-0.8	2.6	5.9	-1.0	18.40
	407	3.7	3.4	2.5	5.9	0.9	41.22
Min	Cent	3.5	5.1	1.7	7.2	1.5	52.36
	115	-1.6	7.1	2.5	7.8	-2.4	75.02
	6	9.3	11.4	0.4	13.8	7.4	56.98
	408	2.4	-2.7	-0.0	2.4	-3.2	-0.76
	407	1.7	3.0	2.0	4.8	0.3	56.11

	NODE	Vxx	Vyy
Max	Cent	-12.2	18.8
	115	-17.8	12.9
	6	-17.8	26.0
	408	-1.2	26.0
	407	-1.2	12.9
Min	Cent	-19.3	14.6
	115	-36.2	8.5
	6	-36.2	20.0
	408	-6.6	20.0
	407	-6.6	8.5

ELEM	MAT	SEC	LC	NODE	Fxx	Fyy	Fxy	Fmax	Fmin	ANGLE
358	1	1	SX (RS)	Cent	0.6	0.4	1.3	1.8	-0.8	42.48
				139	0.2	0.8	1.3	1.8	-0.8	51.79
				401	0.2	0.3	1.3	1.5	-1.0	46.08
				409	1.1	0.3	1.3	2.0	-0.7	36.50
				142	1.1	0.8	1.3	2.3	-0.3	42.09

	NODE	Mxx	Myy	Mxy	Mmax	Mmin	ANGLE
	Cent	2.4	0.3	1.8	3.4	-0.7	29.36
	139	3.7	1.4	1.2	4.2	0.9	23.49
	401	6.0	1.6	2.0	6.7	0.8	21.00
	409	3.4	0.5	2.0	4.4	-0.5	26.90
	142	3.3	0.8	1.2	3.8	0.3	22.40

	NODE	Vxx	Vyy
	Cent	8.2	0.7
	139	15.8	1.6
	401	15.8	2.9
	409	0.6	2.9
	142	0.6	1.6

LC	NODE	Fxx	Fyy	Fxy	Fmax	Fmin	ANGLE
SY (RS)	Cent	0.8	2.4	1.5	3.3	-0.0	59.05
	139	1.2	3.2	1.5	3.9	0.4	61.96
	401	1.2	1.6	1.5	2.9	-0.0	49.06
	409	0.5	1.6	1.5	2.6	-0.5	55.69
	142	0.5	3.2	1.5	3.8	-0.1	66.33

	NODE	Mxx	Myy	Mxy	Mmax	Mmin	ANGLE
	Cent	0.8	3.5	0.3	3.5	0.8	83.57
	139	2.2	4.9	0.4	4.9	2.2	82.15
	401	0.7	3.4	0.4	3.4	0.6	81.20
	409	0.8	3.0	0.3	3.1	0.7	81.89
	142	0.8	2.7	0.3	2.7	0.7	81.72

	NODE	Vxx	Vyy
	Cent	2.3	2.5
	139	4.5	3.8
	401	4.5	1.2
	409	0.2	1.2
	142	0.2	3.8

LC		NODE	Fxx	Fyy	Fxy	Fmax	Fmin	ANGLE
RC ENV~1	Max	Cent	0.7	3.8	2.0	4.8	-0.3	64.31

		139	0.9	4.9	2.0	5.7	0.1	67.72
		401	0.9	2.7	2.0	4.0	-0.4	57.59
		409	1.1	2.7	2.0	3.9	-0.2	60.06
		142	1.1	4.9	2.0	5.6	-0.2	69.19
	Min	Cent	-1.0	-1.0	-0.9	-0.1	-1.9	-45.64
		139	-1.5	-1.5	-0.9	-0.6	-2.4	-46.34
		401	-1.5	-0.5	-0.9	0.0	-2.1	-59.27
		409	-1.1	-0.5	-0.9	0.4	-1.5	-45.10
		142	-1.1	-1.5	-0.9	0.1	-2.0	-31.86

	NODE	Mxx	Myy	Mxy	Mmax	Mmin	ANGLE
Max	Cent	8.0	6.0	1.5	8.1	5.4	-7.44
	139	11.0	8.3	1.0	11.3	8.3	-12.78
	401	9.5	6.7	1.5	9.9	5.1	16.41
	409	5.8	4.4	1.6	6.4	3.2	19.68
	142	9.9	4.7	1.1	10.0	4.6	-4.40
Min	Cent	2.2	-0.9	-2.0	3.9	-1.0	-6.94
	139	3.0	-1.4	-1.5	4.0	-1.5	-35.37
	401	-2.4	-0.0	-2.5	2.9	-3.6	-65.15
	409	-0.9	-1.6	-2.3	1.8	-2.5	-11.64
	142	2.5	-0.7	-1.3	3.3	-0.7	-31.21

	NODE	Vxx	Vyy
Max	Cent	13.9	6.2
	139	21.4	6.3
	401	21.4	7.5
	409	8.6	7.5
	142	8.6	6.3
Min	Cent	-2.4	0.4
	139	-10.2	-1.3
	401	-10.2	0.4
	409	5.3	0.4
	142	5.3	-1.3

LC		NODE	Fxx	Fyy	Fxy	Fmax	Fmin	ANGLE
RC ENV~2	Max	Cent	0.1	2.3	1.1	2.4	-0.3	67.23
		139	-0.2	2.9	1.1	2.9	-0.4	82.08
		401	-0.2	1.7	1.1	2.1	-0.4	67.50
		409	0.5	1.7	1.1	2.2	-0.2	62.11
		142	0.5	2.9	1.1	3.0	-0.1	81.69
	Min	Cent	-0.6	1.2	0.0	1.5	-0.6	74.34
		139	-0.6	1.2	0.0	1.7	-0.8	62.90
		401	-0.6	1.1	0.0	1.1	-0.9	88.73
		409	-0.6	1.1	0.0	1.1	-0.6	88.83
		142	-0.6	1.2	0.0	1.8	-0.6	63.12

	NODE	Mxx	Myy	Mxy	Mmax	Mmin	ANGLE
Max	Cent	5.9	2.7	-0.2	6.0	2.5	-7.15
	139	8.2	4.2	-0.2	8.4	4.1	-11.83
	401	6.1	3.9	-0.4	6.3	3.8	-15.32
	409	3.8	1.7	-0.3	3.9	1.3	-8.94
	142	7.4	2.0	-0.1	7.4	2.0	-3.96
Min	Cent	3.8	1.8	-1.3	4.3	1.5	-28.53
	139	6.2	2.8	-1.0	6.3	2.6	-5.87
	401	1.4	2.8	-1.6	3.7	0.6	-62.63
	409	1.2	0.2	-1.4	2.4	-0.3	-26.86
	142	4.7	0.9	-0.8	4.8	0.8	-8.13

	NODE	Vxx	Vyy
Max	Cent	8.9	4.4
	139	11.5	3.9
	401	11.5	5.4
	409	6.5	5.4
	142	6.5	3.9
Min	Cent	3.4	2.8
	139	0.8	2.5
	401	0.8	2.5
	409	5.9	2.5
	142	5.9	2.5

ELEM	MAT	SEC	LC		NODE	Fxx	Fyy	Fxy	Fmax	Fmin	ANGLE

```
359      1      1       SX (RS)   Cent        1.9        0.3        1.7        2.9       -0.8      32.05
                                  401        3.0        0.5        1.7        3.8       -0.3      26.31
                                  402        3.0        0.5        1.7        3.8       -0.4      26.17
                                  410        0.7        0.5        1.7        2.2       -1.1      42.82
                                  409        0.7        0.5        1.7        2.2       -1.1      43.05

                                 NODE        Mxx        Myy        Mxy       Mmax       Mmin      ANGLE
                             ---- ------ ---------- ---------- ---------- ---------- ---------- ----------
                                 Cent        4.4        0.5        1.0        4.6        0.3      13.04
                                  401        5.6        1.5        1.2        5.9        1.2      14.97
                                  402        4.4        0.7        0.8        4.5        0.5      11.42
                                  410        4.0        0.2        0.8        4.2        0.0      11.60
                                  409        3.6        0.4        1.2        4.0        0.0      18.47

                                 NODE        Vxx        Vyy
                             ---- ------ ---------- ----------
                                 Cent        0.7        1.8
                                  401        1.8        2.9
                                  402        1.8        0.7
                                  410        0.5        0.7
                                  409        0.5        2.9


                        LC       NODE        Fxx        Fyy        Fxy       Fmax       Fmin      ANGLE
                   -------- ---- ------ ---------- ---------- ---------- ---------- ---------- ----------
                        SY (RS)  Cent        0.4        1.0        1.9        2.6       -1.2      49.61
                                  401        0.5        1.8        1.9        3.1       -0.8      54.39
                                  402        0.5        0.4        1.9        2.3       -1.4      44.58
                                  410        0.5        0.4        1.9        2.3       -1.4      44.89
                                  409        0.5        1.8        1.9        3.1       -0.9      54.66

                                 NODE        Mxx        Myy        Mxy       Mmax       Mmin      ANGLE
                             ---- ------ ---------- ---------- ---------- ---------- ---------- ----------
                                 Cent        0.6        2.9        0.6        3.0        0.5      76.04
                                  401        1.3        3.7        0.7        3.9        1.1      74.23
                                  402        0.5        2.2        0.8        2.5        0.2      69.57
                                  410        0.4        2.5        0.5        2.6        0.2      76.93
                                  409        0.6        3.0        0.5        3.1        0.6      79.24

                                 NODE        Vxx        Vyy
                             ---- ------ ---------- ----------
                                 Cent        1.1        0.4
                                  401        1.7        1.2
                                  402        1.7        0.4
                                  410        0.5        0.4
                                  409        0.5        1.2


                        LC       NODE        Fxx        Fyy        Fxy       Fmax       Fmin      ANGLE
                   -------- ---- ------ ---------- ---------- ---------- ---------- ---------- ----------
                   RC ENV~1  Max  Cent        2.1        1.8        2.6        4.0       -0.3      38.53
                                  401        3.6        3.0        2.6        5.2        0.6      33.95
                                  402        3.6        0.9        2.6        4.9       -0.3      29.90
                                  410        0.7        0.9        2.6        3.2       -0.6      47.33
                                  409        0.7        3.0        2.6        4.6       -0.4      58.18
                             Min  Cent       -1.6       -0.2       -1.2        0.9       -1.9     -69.11
                                  401       -2.4       -0.6       -1.2        1.0       -2.7     -37.14
                                  402       -2.4       -0.1       -1.2        0.3       -2.7     -70.58
                                  410       -0.7       -0.1       -1.2        0.6       -1.9     -54.89
                                  409       -0.7       -0.6       -1.2        0.6       -1.7     -44.11

                                 NODE        Mxx        Myy        Mxy       Mmax       Mmin      ANGLE
                             ---- ------ ---------- ---------- ---------- ---------- ---------- ----------
                             Max  Cent        5.3        5.0        0.4        5.3        2.6       7.61
                                  401        8.4        6.9        0.5        8.5        4.6       7.82
                                  402        3.5        4.7        0.2        4.7        3.0      88.22
                                  410        3.3        3.9        0.3        3.9        1.6      89.59
                                  409        6.0        4.4        0.7        6.1        3.0       8.99
                             Min  Cent       -3.5       -0.7       -2.1        1.1       -3.9     -33.39
                                  401       -2.7       -0.5       -2.3        2.3       -3.4     -26.57
                                  402       -5.3        0.2       -2.1        1.0       -5.5     -59.55
                                  410       -4.8       -1.1       -1.8       -0.1       -5.1     -45.46
                                  409       -1.3       -1.6       -2.1        1.9       -2.2     -61.59

                                 NODE        Vxx        Vyy
                             ---- ------ ---------- ----------
                             Max  Cent        9.9        5.7
                                  401       11.4        7.5
                                  402       11.4        3.9
```

		410	8.5	3.9
		409	8.5	7.5
	Min	Cent	4.9	0.8
		401	4.6	0.4
		402	4.6	1.3
		410	5.0	1.3
		409	5.0	0.4

LC		NODE	Fxx	Fyy	Fxy	Fmax	Fmin	ANGLE
RC ENV~2	Max	Cent	1.2	1.2	1.4	2.5	-0.2	43.00
		401	2.0	1.9	1.4	3.3	0.4	40.79
		402	2.0	0.7	1.4	2.8	-0.2	29.73
		410	0.4	0.7	1.4	1.8	-0.4	45.23
		409	0.4	1.9	1.4	2.6	-0.3	60.85
	Min	Cent	-0.6	0.8	0.1	0.8	-0.6	84.56
		401	-0.8	1.0	0.1	1.1	-0.8	85.79
		402	-0.8	0.3	0.1	0.5	-0.8	84.08
		410	-0.5	0.3	0.1	0.5	-1.1	82.32
		409	-0.5	1.0	0.1	1.1	-0.6	84.96

		NODE	Mxx	Myy	Mxy	Mmax	Mmin	ANGLE
	Max	Cent	2.4	2.1	-0.6	3.2	1.3	-37.91
		401	5.0	3.7	-0.6	5.6	3.3	-28.23
		402	0.3	2.5	-0.6	2.8	0.0	-71.10
		410	0.5	1.5	-0.5	1.7	0.0	-55.94
		409	3.7	1.7	-0.5	4.0	1.2	-15.57
	Min	Cent	-0.8	1.4	-1.4	2.3	-1.3	-69.09
		401	0.9	2.6	-1.6	3.4	0.2	-67.18
		402	-2.8	1.9	-1.4	2.3	-3.0	-73.40
		410	-2.4	0.5	-1.3	1.2	-2.7	-68.79
		409	1.0	0.2	-1.4	2.3	-0.4	-55.10

		NODE	Vxx	Vyy
	Max	Cent	7.4	4.1
		401	8.4	5.4
		402	8.4	2.8
		410	6.4	2.8
		409	6.4	5.4
	Min	Cent	5.9	2.1
		401	6.1	2.5
		402	6.1	1.8
		410	5.5	1.8
		409	5.5	2.5

ELEM	MAT	SEC	LC		NODE	Fxx	Fyy	Fxy	Fmax	Fmin	ANGLE
360	1	1	SX (RS)		Cent	1.5	0.4	1.1	2.2	-0.3	31.08
					402	2.0	0.5	1.1	2.6	-0.1	27.75
					403	2.0	0.3	1.1	2.5	-0.2	25.75
					411	1.1	0.3	1.1	1.8	-0.5	34.98
					410	1.1	0.5	1.1	1.9	-0.3	37.81

		NODE	Mxx	Myy	Mxy	Mmax	Mmin	ANGLE
		Cent	3.7	0.4	0.6	3.8	0.3	9.59
		402	4.2	0.6	0.6	4.3	0.5	8.89
		403	3.2	0.6	0.5	3.3	0.5	9.72
		411	3.3	0.4	0.6	3.4	0.3	10.41
		410	3.9	0.2	0.7	4.0	0.1	9.81

		NODE	Vxx	Vyy
		Cent	1.5	0.6
		402	1.8	0.7
		403	1.8	0.4
		411	1.2	0.4
		410	1.2	0.7

LC		NODE	Fxx	Fyy	Fxy	Fmax	Fmin	ANGLE
SY (RS)		Cent	0.6	0.4	1.4	1.8	-0.9	42.92
		402	0.7	0.4	1.4	1.9	-0.8	41.78
		403	0.7	0.3	1.4	1.9	-0.8	40.70

		411	0.4	0.3	1.4	1.7	-1.0	44.11
		410	0.4	0.4	1.4	1.8	-0.9	45.22

	NODE	Mxx	Myy	Mxy	Mmax	Mmin	ANGLE
	Cent	0.6	2.3	0.8	2.6	0.3	68.85
	402	0.5	2.3	0.8	2.6	0.2	68.66
	403	0.7	2.1	0.9	2.5	0.3	64.21
	411	0.4	2.1	0.7	2.4	0.2	69.49
	410	0.6	2.5	0.7	2.7	0.4	73.00

	NODE	Vxx	Vyy
	Cent	0.2	0.3
	402	0.5	0.4
	403	0.5	0.1
	411	0.1	0.1
	410	0.1	0.4

LC		NODE	Fxx	Fyy	Fxy	Fmax	Fmin	ANGLE
RC ENV~1	Max	Cent	1.7	0.8	1.8	2.8	-0.1	35.95
		402	2.3	0.9	1.8	3.2	-0.1	32.61
		403	2.3	0.7	1.8	3.2	-0.0	30.56
		411	1.2	0.7	1.8	2.4	-0.2	39.66
		410	1.2	0.9	1.8	2.5	-0.2	42.18
	Min	Cent	-1.3	-0.0	-0.9	0.3	-1.6	-67.19
		402	-1.7	-0.1	-0.9	0.1	-2.0	-70.00
		403	-1.7	0.0	-0.9	0.3	-1.9	-71.65
		411	-0.9	0.0	-0.9	0.4	-1.3	-63.58
		410	-0.9	-0.1	-0.9	0.2	-1.3	-60.65

		NODE	Mxx	Myy	Mxy	Mmax	Mmin	ANGLE
	Max	Cent	1.4	4.0	0.3	4.0	1.3	86.53
		402	3.4	4.8	0.3	4.8	3.1	86.53
		403	-0.7	3.8	0.5	3.8	-0.7	85.86
		411	-0.1	3.5	0.4	3.5	-0.1	86.18
		410	2.9	3.9	0.2	3.9	1.5	87.16
	Min	Cent	-6.0	-0.5	-1.6	-0.0	-6.1	-67.19
		402	-5.1	0.1	-1.8	0.9	-5.2	-59.86
		403	-7.7	-0.4	-1.4	-0.1	-7.8	-74.96
		411	-6.8	-0.7	-1.3	-0.4	-7.0	-73.38
		410	-4.9	-1.2	-1.7	-0.3	-5.1	-50.82

		NODE	Vxx	Vyy
	Max	Cent	7.9	2.8
		402	8.9	3.9
		403	8.9	1.8
		411	7.0	1.8
		410	7.0	3.9
	Min	Cent	3.3	0.9
		402	3.5	1.3
		403	3.5	0.4
		411	3.0	0.4
		410	3.0	1.3

LC		NODE	Fxx	Fyy	Fxy	Fmax	Fmin	ANGLE
RC ENV~2	Max	Cent	1.0	0.6	0.8	1.5	-0.1	33.90
		402	1.3	0.6	0.8	1.7	-0.0	29.39
		403	1.3	0.5	0.8	1.7	-0.0	30.35
		411	0.7	0.5	0.8	1.4	-0.1	39.08
		410	0.7	0.6	0.8	1.3	-0.2	37.85
	Min	Cent	-0.6	0.3	0.1	0.5	-0.6	83.02
		402	-0.7	0.2	0.1	0.5	-0.7	75.41
		403	-0.7	0.3	0.1	0.4	-0.7	83.18
		411	-0.5	0.3	0.1	0.4	-0.6	81.75
		410	-0.5	0.2	0.1	0.5	-0.6	74.40

		NODE	Mxx	Myy	Mxy	Mmax	Mmin	ANGLE
	Max	Cent	-1.4	1.7	-0.4	1.8	-1.5	-84.49
		402	0.4	2.5	-0.5	2.8	0.1	-72.72
		403	-3.4	1.7	-0.4	1.7	-3.4	-86.14
		411	-2.7	1.4	-0.3	1.4	-2.7	-86.65

	410	0.1	1.4	-0.4	1.5	-0.2	-80.51
Min	Cent	-4.0	1.0	-1.1	1.3	-4.1	-78.24
	402	-2.6	1.9	-1.2	2.2	-2.8	-75.58
	403	-5.6	1.0	-1.0	1.1	-5.7	-82.14
	411	-5.0	0.5	-0.9	0.7	-5.1	-78.36
	410	-2.7	0.4	-1.1	1.0	-2.9	-71.62

	NODE	Vxx	Vyy
Max	Cent	5.9	2.0
	402	6.6	2.8
	403	6.6	1.3
	411	5.2	1.3
	410	5.2	2.8
Min	Cent	4.4	1.3
	402	4.8	1.8
	403	4.8	0.8
	411	3.9	0.8
	410	3.9	1.8

ELEM	MAT	SEC	LC	NODE	Fxx	Fyy	Fxy	Fmax	Fmin	ANGLE
361	1	1	SX (RS)	Cent	1.0	0.3	0.9	1.6	-0.3	33.17
				403	1.3	0.3	0.9	1.8	-0.2	31.32
				404	1.3	0.2	0.9	1.8	-0.3	29.54
				412	0.8	0.2	0.9	1.5	-0.4	35.23
				411	0.8	0.3	0.9	1.5	-0.3	37.36

	NODE	Mxx	Myy	Mxy	Mmax	Mmin	ANGLE
	Cent	2.8	0.4	0.4	2.8	0.4	8.59
	403	3.3	0.6	0.4	3.3	0.6	8.37
	404	2.3	0.4	0.3	2.3	0.4	8.90
	412	2.3	0.4	0.3	2.4	0.3	9.09
	411	3.2	0.4	0.4	3.2	0.3	8.46

	NODE	Vxx	Vyy
	Cent	1.6	0.3
	403	1.7	0.4
	404	1.7	0.2
	412	1.6	0.2
	411	1.6	0.4

LC	NODE	Fxx	Fyy	Fxy	Fmax	Fmin	ANGLE
SY (RS)	Cent	0.8	0.3	1.2	1.7	-0.7	39.95
	403	0.9	0.3	1.2	1.8	-0.6	37.83
	404	0.9	0.4	1.2	1.9	-0.6	38.82
	412	0.6	0.4	1.2	1.7	-0.7	42.61
	411	0.6	0.3	1.2	1.6	-0.7	41.58

	NODE	Mxx	Myy	Mxy	Mmax	Mmin	ANGLE
	Cent	0.7	2.1	0.8	2.5	0.3	64.78
	403	0.9	2.1	0.9	2.6	0.4	62.69
	404	0.8	2.1	0.9	2.6	0.3	62.34
	412	0.6	2.1	0.8	2.5	0.3	66.84
	411	0.6	2.1	0.8	2.4	0.3	67.42

	NODE	Vxx	Vyy
	Cent	0.2	0.1
	403	0.2	0.1
	404	0.2	0.2
	412	0.2	0.2
	411	0.2	0.1

LC		NODE	Fxx	Fyy	Fxy	Fmax	Fmin	ANGLE
RC ENV~1	Max	Cent	1.2	0.7	1.5	2.2	0.1	42.65
		403	1.5	0.7	1.5	2.4	0.1	40.38
		404	1.5	0.7	1.5	2.4	0.1	40.72
		412	0.9	0.7	1.5	2.1	0.0	45.35
		411	0.9	0.7	1.5	2.1	0.0	45.00
	Min	Cent	-0.9	-0.0	-0.9	0.3	-1.3	-64.05

403	-1.1	-0.0	-0.9	0.3	-1.3	-65.31
404	-1.1	-0.1	-0.9	0.3	-1.4	-66.53
412	-0.8	-0.1	-0.9	0.4	-1.3	84.00
411	-0.8	-0.0	-0.9	0.3	-1.2	-61.08

	NODE	Mxx	Myy	Mxy	Mmax	Mmin	ANGLE
Max	Cent	-1.7	3.5	0.9	3.6	-1.7	83.07
	403	-0.7	3.8	0.8	3.9	-0.7	83.45
	404	-3.2	3.3	1.1	3.5	-3.3	82.23
	412	-2.4	3.4	1.0	3.5	-2.5	82.59
	411	-0.4	3.5	0.7	3.5	-0.4	83.97
Min	Cent	-8.0	-0.7	-0.8	-0.6	-8.1	-80.14
	403	-7.6	-0.4	-1.0	-0.2	-7.7	-78.08
	404	-9.4	-0.8	-0.7	-0.7	-9.4	-82.57
	412	-8.2	-0.9	-0.6	-0.8	-8.3	-82.48
	411	-6.9	-0.8	-0.9	-0.6	-7.0	-76.65

	NODE	Vxx	Vyy
Max	Cent	4.2	1.3
	403	4.5	1.8
	404	4.5	0.8
	412	3.9	0.8
	411	3.9	1.8
Min	Cent	0.8	0.3
	403	0.9	0.4
	404	0.9	0.0
	412	0.6	0.0
	411	0.6	0.4

LC		NODE	Fxx	Fyy	Fxy	Fmax	Fmin	ANGLE
RC ENV~2	Max	Cent	0.7	0.5	0.5	1.1	0.0	34.08
		403	0.9	0.5	0.5	1.2	0.1	30.08
		404	0.9	0.4	0.5	1.2	0.1	30.29
		412	0.6	0.4	0.5	1.0	0.0	38.57
		411	0.6	0.5	0.5	1.0	0.0	38.31
	Min	Cent	-0.5	0.3	0.1	0.3	-0.5	82.04
		403	-0.5	0.3	0.1	0.4	-0.5	75.51
		404	-0.5	0.3	0.1	0.3	-0.5	81.27
		412	-0.6	0.3	0.1	0.3	-0.6	81.70
		411	-0.6	0.3	0.1	0.4	-0.6	77.04

	NODE	Mxx	Myy	Mxy	Mmax	Mmin	ANGLE
Max	Cent	-4.0	1.4	0.0	1.4	-4.0	89.56
	403	-3.4	1.7	-0.1	1.7	-3.4	-89.12
	404	-5.3	1.3	0.2	1.3	-5.3	88.39
	412	-4.5	1.3	0.2	1.3	-4.5	88.21
	411	-2.9	1.4	-0.1	1.4	-2.9	-89.06
Min	Cent	-5.9	0.6	-0.4	0.6	-5.9	-85.79
	403	-5.6	1.0	-0.6	1.0	-5.6	-85.03
	404	-7.0	0.4	-0.2	0.4	-7.0	-88.20
	412	-6.1	0.3	-0.3	0.3	-6.1	-87.81
	411	-5.1	0.5	-0.6	0.6	-5.1	-82.37

	NODE	Vxx	Vyy
Max	Cent	3.1	0.9
	403	3.3	1.3
	404	3.3	0.6
	412	2.9	0.6
	411	2.9	1.3
Min	Cent	1.9	0.5
	403	2.1	0.8
	404	2.1	0.3
	412	1.7	0.3
	411	1.7	0.8

ELEM	MAT	SEC	LC		NODE	Fxx	Fyy	Fxy	Fmax	Fmin	ANGLE
362	1	1	SX (RS)		Cent	0.6	0.2	0.9	1.3	-0.5	38.94
					404	0.7	0.3	0.9	1.4	-0.4	38.41
					405	0.7	0.2	0.9	1.3	-0.5	37.09
					413	0.5	0.2	0.9	1.2	-0.6	39.55
					412	0.5	0.3	0.9	1.3	-0.5	40.92

	NODE	Mxx	Myy	Mxy	Mmax	Mmin	ANGLE
	Cent	1.8	0.3	0.1	1.8	0.3	5.79
	404	2.3	0.4	0.2	2.3	0.4	5.99
	405	1.3	0.3	0.1	1.3	0.3	5.51
	413	1.4	0.3	0.1	1.4	0.3	5.77
	412	2.3	0.3	0.2	2.3	0.3	6.30

	NODE	Vxx	Vyy
	Cent	1.8	0.3
	404	1.8	0.2
	405	1.8	0.4
	413	1.7	0.4
	412	1.7	0.2

LC		NODE	Fxx	Fyy	Fxy	Fmax	Fmin	ANGLE
SY (RS)		Cent	1.0	0.4	1.2	1.9	-0.5	37.99
		404	1.2	0.4	1.2	2.0	-0.4	35.86
		405	1.2	0.4	1.2	2.0	-0.4	35.99
		413	0.8	0.4	1.2	1.8	-0.6	40.85
		412	0.8	0.4	1.2	1.8	-0.6	40.70

	NODE	Mxx	Myy	Mxy	Mmax	Mmin	ANGLE
	Cent	0.7	2.2	0.9	2.7	0.3	64.47
	404	0.8	2.1	1.0	2.6	0.3	60.76
	405	0.8	2.4	1.0	2.9	0.3	63.15
	413	0.7	2.5	0.9	2.8	0.3	68.19
	412	0.7	2.1	0.8	2.5	0.3	65.73

	NODE	Vxx	Vyy
	Cent	0.3	0.2
	404	0.4	0.2
	405	0.4	0.3
	413	0.3	0.3
	412	0.3	0.2

LC		NODE	Fxx	Fyy	Fxy	Fmax	Fmin	ANGLE
RC ENV~1	Max	Cent	1.0	0.7	1.3	2.2	0.2	41.39
		404	1.3	0.7	1.3	2.3	0.2	38.18
		405	1.3	0.8	1.3	2.4	0.3	39.18
		413	0.8	0.8	1.3	2.0	0.2	45.27
		412	0.8	0.7	1.3	2.0	0.1	44.22
	Min	Cent	-0.9	-0.1	-1.0	0.4	-1.6	87.47
		404	-1.0	-0.1	-1.0	0.4	-1.7	87.02
		405	-1.0	-0.1	-1.0	0.4	-1.7	87.26
		413	-0.8	-0.1	-1.0	0.4	-1.5	87.81
		412	-0.8	-0.1	-1.0	0.4	-1.5	87.66

		NODE	Mxx	Myy	Mxy	Mmax	Mmin	ANGLE
	Max	Cent	-3.2	3.5	1.6	3.8	-3.3	78.89
		404	-3.2	3.3	1.5	3.6	-3.3	79.58
		405	-3.9	3.7	1.9	4.1	-4.0	77.61
		413	-3.2	3.5	1.6	3.9	-3.4	78.21
		412	-2.5	3.4	1.3	3.6	-2.6	80.43
	Min	Cent	-8.2	-1.0	-0.3	-1.0	-8.2	-86.72
		404	-9.3	-0.8	-0.5	-0.8	-9.3	-85.13
		405	-8.3	-1.0	-0.2	-1.0	-8.3	-87.40
		413	-7.4	-1.4	-0.1	-1.4	-7.4	-88.79
		412	-8.1	-0.9	-0.3	-0.8	-8.1	-85.87

	NODE	Vxx	Vyy
Max	Cent	1.4	1.3
	404	1.3	0.8
	405	1.3	1.7
	413	1.4	1.7
	412	1.4	0.8
Min	Cent	-2.2	0.2
	404	-2.3	0.0
	405	-2.3	0.3

		413	-2.0	0.3			
		412	-2.0	0.0			

LC		NODE	Fxx	Fyy	Fxy	Fmax	Fmin	ANGLE
RC ENV~2	Max	Cent	0.5	0.5	0.3	0.7	0.2	39.61
		404	0.6	0.4	0.3	0.8	0.2	31.31
		405	0.6	0.6	0.3	0.8	0.3	38.49
		413	0.4	0.6	0.3	0.7	0.2	48.89
		412	0.4	0.4	0.3	0.6	0.1	40.74
	Min	Cent	-0.4	0.3	0.0	0.3	-0.4	85.77
		404	-0.3	0.2	0.0	0.3	-0.3	84.92
		405	-0.3	0.3	0.0	0.3	-0.3	85.41
		413	-0.5	0.3	0.0	0.3	-0.5	86.38
		412	-0.5	0.2	0.0	0.3	-0.5	86.09

	NODE	Mxx	Myy	Mxy	Mmax	Mmin	ANGLE
Max	Cent	-4.9	1.2	0.7	1.3	-5.0	84.22
	404	-5.3	1.3	0.5	1.3	-5.3	85.72
	405	-5.1	1.4	0.8	1.5	-5.2	83.09
	413	-4.6	1.1	0.8	1.2	-4.7	82.52
	412	-4.5	1.3	0.5	1.3	-4.5	85.62
Min	Cent	-6.1	0.3	0.3	0.4	-6.1	86.42
	404	-6.9	0.5	0.2	0.5	-6.9	88.17
	405	-6.2	0.5	0.5	0.5	-6.2	84.66
	413	-5.5	0.1	0.4	0.1	-5.6	84.31
	412	-6.0	0.3	0.1	0.4	-6.0	88.60

	NODE	Vxx	Vyy
Max	Cent	0.1	0.9
	404	0.0	0.6
	405	0.0	1.2
	413	0.2	1.2
	412	0.2	0.6
Min	Cent	-1.2	0.5
	404	-1.3	0.3
	405	-1.3	0.7
	413	-1.1	0.7
	412	-1.1	0.3

ELEM	MAT	SEC	LC		NODE	Fxx	Fyy	Fxy	Fmax	Fmin	ANGLE
363	1	1	SX (RS)		Cent	0.2	0.1	1.0	1.2	-0.9	44.38
					405	0.3	0.2	1.0	1.3	-0.8	43.55
					406	0.3	0.2	1.0	1.2	-0.8	43.18
					414	0.2	0.2	1.0	1.2	-0.8	44.04
					413	0.2	0.2	1.0	1.2	-0.8	44.41

	NODE	Mxx	Myy	Mxy	Mmax	Mmin	ANGLE
	Cent	0.8	0.3	0.1	0.9	0.3	8.98
	405	1.3	0.4	0.0	1.3	0.3	1.90
	406	0.4	0.3	0.1	0.5	0.2	33.61
	414	0.7	0.3	0.2	0.7	0.3	20.23
	413	1.3	0.3	0.1	1.3	0.3	3.94

	NODE	Vxx	Vyy
	Cent	1.9	0.6
	405	2.1	0.4
	406	2.1	0.8
	414	1.7	0.8
	413	1.7	0.4

LC		NODE	Fxx	Fyy	Fxy	Fmax	Fmin	ANGLE
SY (RS)		Cent	1.2	0.5	1.3	2.1	-0.5	37.43
		405	1.4	0.5	1.3	2.3	-0.4	35.19
		406	1.4	0.5	1.3	2.3	-0.4	35.67
		414	1.0	0.5	1.3	2.0	-0.5	39.77
		413	1.0	0.5	1.3	2.0	-0.6	39.25

	NODE	Mxx	Myy	Mxy	Mmax	Mmin	ANGLE

Cent	0.9	2.7	1.0	3.1	0.5	66.51
405	0.9	2.3	1.1	2.9	0.3	60.20
406	1.2	2.8	1.1	3.3	0.6	63.42
414	0.7	3.4	0.7	3.6	0.5	75.38
413	0.8	2.4	0.8	2.8	0.5	66.37

NODE	Vxx	Vyy
Cent	0.5	0.7
405	1.1	0.3
406	1.1	1.0
414	0.1	1.0
413	0.1	0.3

LC		NODE	Fxx	Fyy	Fxy	Fmax	Fmin	ANGLE
RC ENV~1	Max	Cent	1.2	0.9	1.3	2.3	0.3	41.44
		405	1.4	0.8	1.3	2.4	0.3	38.08
		406	1.4	0.9	1.3	2.4	0.3	39.29
		414	0.9	0.9	1.3	2.2	0.3	44.90
		413	0.9	0.8	1.3	2.1	0.2	43.63
	Min	Cent	-1.2	-0.1	-1.3	0.5	-2.0	-86.39
		405	-1.3	-0.1	-1.3	0.4	-2.1	-85.33
		406	-1.3	-0.1	-1.3	0.5	-2.1	-86.09
		414	-1.0	-0.1	-1.3	0.5	-1.9	-87.07
		413	-1.0	-0.1	-1.3	0.4	-1.9	-86.65

	NODE	Mxx	Myy	Mxy	Mmax	Mmin	ANGLE
Max	Cent	-3.0	4.0	2.3	4.7	-3.5	73.67
	405	-4.0	3.6	2.3	4.2	-4.2	74.97
	406	-1.9	4.9	2.5	5.7	-2.7	71.68
	414	-2.3	4.1	2.1	4.7	-2.9	73.23
	413	-3.1	3.5	1.9	4.0	-3.3	75.67
Min	Cent	-6.0	-1.4	0.3	-1.4	-6.3	84.64
	405	-8.4	-1.0	0.0	-1.0	-8.5	89.95
	406	-4.6	-0.7	0.4	-0.6	-5.0	83.98
	414	-4.5	-2.7	0.6	-2.4	-5.0	65.01
	413	-6.8	-1.3	0.2	-1.3	-7.0	86.46

	NODE	Vxx	Vyy
Max	Cent	-1.2	3.3
	405	-1.6	1.7
	406	-1.6	5.0
	414	-0.8	5.0
	413	-0.8	1.7
Min	Cent	-6.0	1.1
	405	-7.0	0.3
	406	-7.0	1.7
	414	-5.0	1.7
	413	-5.0	0.3

LC		NODE	Fxx	Fyy	Fxy	Fmax	Fmin	ANGLE
RC ENV~2	Max	Cent	0.3	0.6	0.1	0.6	0.2	-82.32
		405	0.3	0.6	0.1	0.6	0.2	-80.33
		406	0.3	0.7	0.1	0.7	0.2	82.71
		414	0.3	0.7	0.1	0.7	0.2	84.42
		413	0.3	0.6	0.1	0.6	0.2	-83.06
	Min	Cent	-0.3	0.4	-0.2	0.4	-0.4	-86.80
		405	-0.2	0.3	-0.2	0.3	-0.2	-85.84
		406	-0.2	0.4	-0.2	0.4	-0.2	-86.54
		414	-0.5	0.4	-0.2	0.4	-0.5	-87.40
		413	-0.5	0.3	-0.2	0.3	-0.5	-87.02

	NODE	Mxx	Myy	Mxy	Mmax	Mmin	ANGLE
Max	Cent	-3.9	1.3	1.3	1.6	-4.2	77.01
	405	-5.2	1.3	1.2	1.5	-5.4	80.50
	406	-3.0	2.1	1.5	2.5	-3.4	75.44
	414	-3.0	0.7	1.4	1.1	-3.5	71.89
	413	-4.3	1.1	1.1	1.3	-4.5	79.39
Min	Cent	-4.5	0.3	1.1	0.6	-4.7	76.20
	405	-6.3	0.5	0.9	0.6	-6.4	80.99
	406	-3.5	1.3	1.3	1.7	-3.8	73.91
	414	-3.4	-0.5	1.2	0.1	-3.8	67.69

					413	-5.1	0.1	0.8	0.3	-5.2	79.71

	NODE	Vxx	Vyy
Max	Cent	-2.8	2.4
	405	-3.4	1.2
	406	-3.4	3.7
	414	-2.2	3.7
	413	-2.2	1.2
Min	Cent	-4.4	1.7
	405	-5.1	0.7
	406	-5.1	2.7
	414	-3.7	2.7
	413	-3.7	0.7

ELEM	MAT	SEC	LC		NODE	Fxx	Fyy	Fxy	Fmax	Fmin	ANGLE
364	1	1	SX (RS)		Cent	0.3	0.3	1.4	1.6	-1.1	44.49
					406	0.8	0.1	1.4	1.9	-0.9	37.73
					407	0.8	0.5	1.4	2.1	-0.7	41.54
					415	0.3	0.5	1.4	1.8	-1.0	47.63
					414	0.3	0.1	1.4	1.6	-1.2	43.68

	NODE	Mxx	Myy	Mxy	Mmax	Mmin	ANGLE
	Cent	0.7	0.2	0.3	0.8	0.1	25.69
	406	0.4	0.3	0.2	0.6	0.1	41.67
	407	1.7	1.0	0.4	1.9	0.8	24.03
	415	0.6	0.6	0.4	1.0	0.2	47.92
	414	0.6	0.3	0.3	0.8	0.2	30.01

	NODE	Vxx	Vyy
	Cent	1.7	1.7
	406	2.6	0.8
	407	2.6	2.6
	415	0.8	2.6
	414	0.8	0.8

LC		NODE	Fxx	Fyy	Fxy	Fmax	Fmin	ANGLE
SY (RS)		Cent	1.4	1.4	1.8	3.2	-0.5	44.96
		406	1.9	0.5	1.8	3.2	-0.7	34.52
		407	1.9	2.4	1.8	4.0	0.3	48.46
		415	0.9	2.4	1.8	3.6	-0.3	55.95
		414	0.9	0.5	1.8	2.6	-1.1	42.08

	NODE	Mxx	Myy	Mxy	Mmax	Mmin	ANGLE
	Cent	0.9	3.9	0.6	4.0	0.8	78.43
	406	1.8	2.6	1.0	3.3	1.1	56.40
	407	1.1	5.4	1.0	5.6	0.9	77.79
	415	0.7	4.2	0.4	4.3	0.7	84.27
	414	1.0	3.3	0.4	3.4	1.0	79.99

	NODE	Vxx	Vyy
	Cent	1.9	0.5
	406	3.0	1.0
	407	3.0	2.0
	415	0.8	2.0
	414	0.8	1.0

LC		NODE	Fxx	Fyy	Fxy	Fmax	Fmin	ANGLE
RC ENV~1	Max	Cent	1.3	2.0	1.6	3.3	0.2	50.93
		406	2.1	0.9	1.6	3.2	0.2	35.07
		407	2.1	3.3	1.6	4.4	1.0	55.21
		415	0.7	3.3	1.6	4.0	0.2	64.44
		414	0.7	0.9	1.6	2.4	0.2	47.07
	Min	Cent	-1.4	-0.7	-2.1	0.7	-3.1	78.50
		406	-1.8	-0.1	-2.1	0.5	-3.2	-79.97
		407	-1.8	-1.5	-2.1	0.4	-3.7	-47.09
		415	-1.1	-1.5	-2.1	0.8	-3.4	-42.45
		414	-1.1	-0.1	-2.1	0.5	-2.7	-82.71

	NODE	Mxx	Myy	Mxy	Mmax	Mmin	ANGLE
Max	Cent	-0.5	5.2	2.5	6.0	-1.3	69.83
	406	-1.3	4.7	2.9	5.8	-2.5	68.34
	407	2.6	8.2	2.9	9.3	0.8	69.03
	415	0.2	3.7	2.3	4.5	-0.8	66.85
	414	-1.4	4.1	2.0	4.7	-2.0	72.49
Min	Cent	-2.3	-2.6	1.1	-1.3	-3.6	40.87
	406	-4.9	-0.6	0.8	-0.4	-5.6	79.61
	407	-1.0	-2.6	0.9	-0.1	-2.9	19.67
	415	-1.4	-4.8	1.1	-1.1	-5.2	17.63
	414	-3.6	-2.5	1.1	-1.8	-4.3	56.71

	NODE	Vxx	Vyy
Max	Cent	-3.2	7.9
	406	-3.7	5.0
	407	-3.7	10.8
	415	-2.8	10.8
	414	-2.8	5.0
Min	Cent	-9.1	2.6
	406	-11.8	1.7
	407	-11.8	3.3
	415	-6.3	3.3
	414	-6.3	1.7

LC		NODE	Fxx	Fyy	Fxy	Fmax	Fmin	ANGLE
RC ENV~2	Max	Cent	0.1	1.1	0.0	1.3	0.1	-70.24
		406	0.2	0.7	0.0	1.0	0.1	-56.30
		407	0.2	1.6	0.0	1.8	0.1	-70.70
		415	0.1	1.6	0.0	1.7	0.1	-76.76
		414	0.1	0.7	0.0	0.9	0.1	-69.75
	Min	Cent	-0.2	0.5	-0.6	0.5	-0.5	84.98
		406	0.1	0.4	-0.6	0.4	-0.2	82.13
		407	0.1	0.7	-0.6	0.7	-0.1	86.29
		415	-0.7	0.7	-0.6	0.7	-0.8	86.32
		414	-0.7	0.4	-0.6	0.4	-0.9	82.28

	NODE	Mxx	Myy	Mxy	Mmax	Mmin	ANGLE
Max	Cent	-0.9	1.3	1.9	2.2	-2.1	63.61
	406	-3.1	2.1	2.0	2.7	-3.7	72.47
	407	1.8	3.2	2.2	4.2	0.3	59.19
	415	0.0	-0.6	1.7	0.9	-2.2	46.49
	414	-2.2	0.8	1.5	1.4	-3.0	68.49
Min	Cent	-1.6	0.2	1.6	1.6	-2.6	54.41
	406	-3.6	1.3	1.7	2.0	-4.2	69.44
	407	0.3	1.9	1.7	3.6	-0.9	54.17
	415	-0.8	-2.1	1.4	0.5	-3.0	39.66
	414	-2.7	-0.3	1.4	0.5	-3.3	61.38

	NODE	Vxx	Vyy
Max	Cent	-5.0	5.8
	406	-6.5	3.7
	407	-6.5	7.9
	415	-3.5	7.9
	414	-3.5	3.7
Min	Cent	-6.7	4.2
	406	-8.7	2.7
	407	-8.7	5.8
	415	-4.7	5.8
	414	-4.7	2.7

ELEM	MAT	SEC	LC		NODE	Fxx	Fyy	Fxy	Fmax	Fmin	ANGLE
365	1	1	SX (RS)		Cent	0.3	0.2	1.2	1.4	-1.0	43.51
					407	0.7	0.4	1.2	1.8	-0.6	41.31
					408	0.7	0.1	1.2	1.6	-0.8	37.35
					416	0.1	0.1	1.2	1.3	-1.1	44.20
					415	0.1	0.4	1.2	1.5	-0.9	48.31

	NODE	Mxx	Myy	Mxy	Mmax	Mmin	ANGLE
	Cent	0.2	0.1	0.7	0.9	-0.6	42.54
	407	2.0	1.1	0.8	2.5	0.6	31.17

408	3.4	0.7	0.4	3.5	0.6	8.67
416	0.8	0.2	0.5	1.1	-0.1	28.93
415	0.4	0.7	0.9	1.4	-0.4	49.62

NODE	Vxx	Vyy
Cent	4.1	1.3
407	9.0	2.6
408	9.0	0.0
416	0.9	0.0
415	0.9	2.6

LC		NODE	Fxx	Fyy	Fxy	Fmax	Fmin	ANGLE
SY (RS)		Cent	1.2	3.1	1.1	3.6	0.7	65.35
		407	1.5	2.2	1.1	3.0	0.7	53.02
		408	1.5	4.1	1.1	4.5	1.1	69.48
		416	1.0	4.1	1.1	4.4	0.6	72.33
		415	1.0	2.2	1.1	2.8	0.3	59.38

NODE	Mxx	Myy	Mxy	Mmax	Mmin	ANGLE
Cent	0.8	5.0	0.2	5.0	0.8	87.34
407	2.8	4.8	0.2	4.8	2.7	83.77
408	2.6	7.5	0.2	7.5	2.6	88.20
416	0.8	3.5	0.3	3.5	0.8	83.14
415	0.8	4.3	0.1	4.3	0.8	88.45

NODE	Vxx	Vyy
Cent	4.3	4.5
407	8.2	2.0
408	8.2	7.1
416	0.4	7.1
415	0.4	2.0

LC		NODE	Fxx	Fyy	Fxy	Fmax	Fmin	ANGLE
RC ENV~1	Max	Cent	0.9	4.2	1.0	4.4	0.7	75.24
		407	1.2	3.0	1.0	3.4	0.8	67.08
		408	1.2	5.3	1.0	5.5	1.0	77.96
		416	0.7	5.3	1.0	5.5	0.5	79.23
		415	0.7	3.0	1.0	3.3	0.4	70.84
	Min	Cent	-1.5	-2.1	-1.4	-0.5	-3.1	-38.95
		407	-1.8	-1.3	-1.4	-0.3	-2.9	-50.66
		408	-1.8	-2.8	-1.4	-0.9	-3.7	-34.82
		416	-1.2	-2.8	-1.4	-0.5	-3.5	-29.32
		415	-1.2	-1.3	-1.4	0.0	-2.6	-43.91

NODE	Mxx	Myy	Mxy	Mmax	Mmin	ANGLE
Max Cent	3.9	5.9	1.6	6.2	2.1	74.74
407	5.1	7.8	2.5	8.6	4.0	66.07
408	8.3	10.1	1.0	10.2	6.3	78.73
416	2.5	2.1	0.7	2.5	1.1	0.10
415	1.0	3.8	2.0	4.2	0.2	72.05
Min Cent	0.7	-4.1	0.1	0.8	-4.2	7.73
407	-0.8	-1.7	0.6	0.1	-2.6	34.71
408	0.4	-5.0	0.2	1.2	-5.1	4.06
416	-0.2	-4.9	-0.3	-0.2	-4.9	-1.47
415	-1.0	-4.8	0.2	-0.8	-5.0	13.82

NODE	Vxx	Vyy
Max Cent	1.7	10.7
407	5.6	10.8
408	5.6	13.3
416	-0.8	13.3
415	-0.8	10.8
Min Cent	-6.8	1.6
407	-12.4	3.3
408	-12.4	-0.8
416	-3.1	-0.8
415	-3.1	3.3

LC	NODE	Fxx	Fyy	Fxy	Fmax	Fmin	ANGLE

RC ENV~2	Max	Cent	-0.0	1.8	0.0	1.9	-0.0	-80.42
		407	0.1	1.5	0.0	1.6	0.1	-79.47
		408	0.1	2.1	0.0	2.2	0.1	-81.63
		416	-0.1	2.1	0.0	2.2	-0.1	-81.22
		415	-0.1	1.5	0.0	1.6	-0.1	-78.82
	Min	Cent	-0.7	0.9	-0.5	0.9	-0.8	88.90
		407	-0.8	0.6	-0.5	0.6	-0.9	88.23
		408	-0.8	1.1	-0.5	1.1	-0.9	-86.77
		416	-0.7	1.1	-0.5	1.1	-0.7	-87.02
		415	-0.7	0.6	-0.5	0.6	-0.7	88.65

	NODE	Mxx	Myy	Mxy	Mmax	Mmin	ANGLE
Max	Cent	2.8	0.9	1.1	3.1	0.5	16.98
	407	3.6	3.5	1.8	4.8	1.9	36.53
	408	6.0	2.6	0.7	6.1	2.4	8.84
	416	1.7	-1.4	0.2	1.7	-1.4	0.55
	415	0.7	-0.5	1.4	1.2	-1.4	23.13
Min	Cent	1.5	-0.3	0.6	1.9	-0.6	27.68
	407	1.6	2.2	1.2	3.9	0.3	53.67
	408	3.1	1.5	0.4	3.3	1.4	24.71
	416	0.5	-3.2	-0.0	0.5	-3.2	4.76
	415	-0.2	-2.0	0.8	0.4	-2.5	31.63

	NODE	Vxx	Vyy
Max	Cent	-1.6	7.9
	407	-1.2	7.9
	408	-1.2	7.8
	416	-1.7	7.8
	415	-1.7	7.9
Min	Cent	-4.3	6.0
	407	-6.6	5.8
	408	-6.6	6.2
	416	-2.3	6.2
	415	-2.3	5.8

ELEM	MAT	SEC	LC		NODE	Fxx	Fyy	Fxy	Fmax	Fmin	ANGLE
366	1	1	SX	(RS)	Cent	0.7	0.5	0.9	1.5	-0.3	42.06
					142	1.1	0.7	0.9	1.8	-0.0	38.20
					409	1.1	0.4	0.9	1.7	-0.2	33.95
					417	0.3	0.4	0.9	1.2	-0.6	46.52
					145	0.3	0.7	0.9	1.4	-0.4	51.13

	NODE	Mxx	Myy	Mxy	Mmax	Mmin	ANGLE
	Cent	3.1	0.5	1.6	3.8	-0.3	25.73
	142	3.3	0.7	1.9	4.2	-0.3	27.72
	409	3.5	0.1	1.5	4.1	-0.5	21.21
	417	3.2	0.3	1.4	3.7	-0.3	21.78
	145	2.4	1.0	1.7	3.5	-0.2	33.64

	NODE	Vxx	Vyy
	Cent	1.1	0.7
	142	0.6	1.0
	409	0.6	0.5
	417	1.7	0.5
	145	1.7	1.0

LC		NODE	Fxx	Fyy	Fxy	Fmax	Fmin	ANGLE
SY	(RS)	Cent	0.4	1.3	1.1	2.1	-0.3	55.79
		142	0.7	1.6	1.1	2.3	-0.1	55.53
		409	0.7	1.1	1.1	2.0	-0.2	49.63
		417	0.2	1.1	1.1	1.8	-0.6	55.99
		145	0.2	1.6	1.1	2.2	-0.4	61.02

	NODE	Mxx	Myy	Mxy	Mmax	Mmin	ANGLE
	Cent	0.6	2.5	0.2	2.6	0.5	83.22
	142	0.8	3.0	0.3	3.0	0.8	83.51
	409	0.7	2.9	0.3	3.0	0.7	83.02
	417	0.3	2.1	0.3	2.1	0.3	82.06
	145	0.4	2.1	0.2	2.2	0.3	82.97

	NODE	Vxx	Vyy
	Cent	0.2	1.6
	142	0.2	1.6
	409	0.2	1.5
	417	0.1	1.5
	145	0.1	1.6

LC		NODE	Fxx	Fyy	Fxy	Fmax	Fmin	ANGLE
RC ENV~1	Max	Cent	0.5	2.4	1.5	3.2	-0.1	62.77
		142	1.0	2.8	1.5	3.5	0.1	63.09
		409	1.0	2.0	1.5	3.0	0.1	57.97
		417	0.1	2.0	1.5	2.8	-0.3	62.40
		145	0.1	2.8	1.5	3.4	-0.3	66.62
	Min	Cent	-0.9	-0.2	-0.8	0.4	-1.2	-51.35
		142	-1.2	-0.4	-0.8	0.2	-1.4	-53.08
		409	-1.2	-0.1	-0.8	0.4	-1.3	-57.52
		417	-0.7	-0.1	-0.8	0.5	-1.0	-49.66
		145	-0.7	-0.4	-0.8	0.4	-1.1	-44.61

	NODE	Mxx	Myy	Mxy	Mmax	Mmin	ANGLE
Max	Cent	7.3	4.1	1.4	7.5	4.1	14.85
	142	10.0	5.2	1.7	10.0	5.2	-3.48
	409	5.9	4.5	1.3	6.3	3.2	16.11
	417	5.5	3.1	1.2	5.8	2.6	15.02
	145	9.1	3.7	1.6	9.1	3.7	-3.91
Min	Cent	1.0	-1.0	-1.8	2.8	-1.0	-45.67
	142	2.6	-0.8	-2.0	4.2	-0.8	-37.49
	409	-1.0	-1.3	-1.7	1.8	-1.9	-8.71
	417	-0.9	-1.1	-1.6	1.6	-1.9	-58.77
	145	3.3	-0.6	-1.8	4.2	-0.6	-26.72

	NODE	Vxx	Vyy
Max	Cent	8.7	2.7
	142	8.6	2.8
	409	8.6	2.6
	417	8.9	2.6
	145	8.9	2.8
Min	Cent	4.7	-0.4
	142	5.3	-0.4
	409	5.3	-0.4
	417	4.1	-0.4
	145	4.1	-0.4

LC		NODE	Fxx	Fyy	Fxy	Fmax	Fmin	ANGLE
RC ENV~2	Max	Cent	0.2	1.7	0.7	1.8	-0.1	79.59
		142	0.4	2.0	0.7	2.0	0.1	80.65
		409	0.4	1.5	0.7	1.7	0.1	66.19
		417	0.1	1.5	0.7	1.7	-0.2	69.56
		145	0.1	2.0	0.7	2.0	-0.2	80.50
	Min	Cent	-0.6	0.9	0.1	1.2	-0.6	75.75
		142	-0.7	0.9	0.1	1.2	-0.7	65.13
		409	-0.7	0.9	0.1	1.0	-0.7	82.30
		417	-0.5	0.9	0.1	1.0	-0.6	81.64
		145	-0.5	0.9	0.1	1.2	-0.5	63.20

	NODE	Mxx	Myy	Mxy	Mmax	Mmin	ANGLE
Max	Cent	5.4	1.6	-0.1	5.4	1.6	-5.27
	142	7.4	2.2	-0.1	7.5	2.2	-3.21
	409	3.8	1.8	-0.2	3.9	1.6	-8.44
	417	3.6	1.0	-0.1	3.6	1.0	-8.19
	145	6.8	1.5	-0.1	6.8	1.5	-3.54
Min	Cent	3.0	0.5	-1.1	3.2	0.3	-21.44
	142	4.8	1.3	-1.1	5.0	1.1	-14.71
	409	1.2	0.5	-1.1	2.2	0.1	-47.07
	417	1.1	-0.2	-1.0	1.6	-0.4	-43.68
	145	4.8	0.4	-1.0	4.9	0.2	-9.52

	NODE	Vxx	Vyy
Max	Cent	6.5	1.7

			142	6.5	1.8		
			409	6.5	1.5		
			417	6.7	1.5		
			145	6.7	1.8		
		Min	Cent	5.7	1.1		
			142	5.9	1.2		
			409	5.9	1.1		
			417	5.4	1.1		
			145	5.4	1.2		

ELEM	MAT	SEC	LC		NODE	Fxx	Fyy	Fxy	Fmax	Fmin	ANGLE
367	1	1	SX	(RS)	Cent	0.6	0.3	0.9	1.4	-0.5	41.17
					409	0.7	0.4	0.9	1.5	-0.4	40.18
					410	0.7	0.3	0.9	1.5	-0.4	39.33
					418	0.5	0.3	0.9	1.3	-0.5	42.23
					417	0.5	0.4	0.9	1.4	-0.5	43.09

		NODE	Mxx	Myy	Mxy	Mmax	Mmin	ANGLE
		Cent	3.7	0.3	1.2	4.1	-0.1	16.80
		409	3.7	0.1	1.2	4.1	-0.2	17.28
		410	4.1	0.5	1.0	4.3	0.2	14.55
		418	3.6	0.2	1.0	3.9	-0.1	15.50
		417	3.5	0.3	1.3	3.9	-0.1	19.61

		NODE	Vxx	Vyy
		Cent	0.4	0.2
		409	0.5	0.5
		410	0.5	0.4
		418	0.4	0.4
		417	0.4	0.5

LC		NODE	Fxx	Fyy	Fxy	Fmax	Fmin	ANGLE
SY	(RS)	Cent	0.3	0.7	1.6	2.2	-1.1	48.56
		409	0.5	1.1	1.6	2.4	-0.8	50.18
		410	0.5	0.5	1.6	2.1	-1.1	44.60
		418	0.2	0.5	1.6	1.9	-1.3	47.35
		417	0.2	1.1	1.6	2.3	-1.0	52.79

		NODE	Mxx	Myy	Mxy	Mmax	Mmin	ANGLE
		Cent	0.5	2.4	0.4	2.5	0.4	79.73
		409	0.6	2.9	0.3	2.9	0.6	81.54
		410	0.4	2.5	0.4	2.6	0.3	79.03
		418	0.4	2.1	0.4	2.2	0.3	77.53
		417	0.5	2.1	0.3	2.2	0.4	79.48

		NODE	Vxx	Vyy
		Cent	0.3	1.2
		409	0.5	1.5
		410	0.5	0.8
		418	0.1	0.8
		417	0.1	1.5

LC		NODE	Fxx	Fyy	Fxy	Fmax	Fmin	ANGLE
RC ENV~1	Max	Cent	0.5	1.7	2.1	3.1	-0.1	53.51
		409	0.7	2.1	2.1	3.5	-0.0	55.34
		410	0.7	1.4	2.1	2.9	-0.1	49.17
		418	0.4	1.4	2.1	2.8	-0.2	51.91
		417	0.4	2.1	2.1	3.4	-0.2	57.75
	Min	Cent	-0.8	0.1	-1.1	0.6	-1.3	-72.05
		409	-0.7	-0.1	-1.1	0.7	-1.4	-74.01
		410	-0.7	0.2	-1.1	0.5	-1.4	-70.69
		418	-0.9	0.2	-1.1	0.5	-1.6	-69.58
		417	-0.9	-0.1	-1.1	0.7	-1.3	-73.21

		NODE	Mxx	Myy	Mxy	Mmax	Mmin	ANGLE
	Max	Cent	4.5	3.6	0.9	4.7	1.2	15.45
		409	6.1	4.5	0.9	6.3	3.0	11.40
		410	3.3	3.8	0.7	3.8	1.5	88.64

		418	2.9	3.0	0.9	3.2	0.7	21.81
		417	5.6	3.1	1.1	5.8	2.5	13.90
	Min	Cent	-3.0	-1.2	-1.5	0.5	-3.4	-19.60
		409	-1.4	-1.3	-1.7	1.9	-2.1	-11.72
		410	-4.9	-1.2	-1.6	-0.4	-5.2	-44.12
		418	-4.4	-1.2	-1.3	-0.6	-4.7	-44.12
		417	-1.4	-1.2	-1.4	1.4	-2.1	-62.42

		NODE	Vxx	Vyy
	Max	Cent	8.1	2.1
		409	8.5	2.6
		410	8.5	1.7
		418	7.6	1.7
		417	7.6	2.6
	Min	Cent	4.9	-0.2
		409	5.0	-0.4
		410	5.0	0.0
		418	4.7	0.0
		417	4.7	-0.4

LC		NODE	Fxx	Fyy	Fxy	Fmax	Fmin	ANGLE
RC ENV~2	Max	Cent	0.3	1.2	0.9	1.7	-0.1	61.51
		409	0.4	1.5	0.9	1.9	-0.0	62.66
		410	0.4	1.0	0.9	1.6	-0.1	57.52
		418	0.2	1.0	0.9	1.5	-0.2	60.30
		417	0.2	1.5	0.9	1.8	-0.1	64.90
	Min	Cent	-0.6	0.8	0.3	0.9	-0.7	76.06
		409	-0.5	0.9	0.3	1.1	-0.6	77.66
		410	-0.5	0.5	0.3	0.6	-0.7	72.94
		418	-0.6	0.5	0.3	0.6	-0.8	74.02
		417	-0.6	0.9	0.3	1.1	-0.8	78.27

		NODE	Mxx	Myy	Mxy	Mmax	Mmin	ANGLE
	Max	Cent	2.0	1.2	-0.2	2.2	0.8	-18.62
		409	3.8	1.7	-0.3	3.9	1.5	-12.31
		410	0.5	1.3	-0.3	1.4	0.2	-79.72
		418	0.4	0.9	-0.1	1.0	0.1	-80.39
		417	3.4	1.0	-0.1	3.5	1.0	-7.66
	Min	Cent	-0.7	0.1	-1.0	1.1	-1.1	-52.82
		409	1.0	0.4	-1.2	2.1	-0.0	-49.31
		410	-2.5	0.3	-1.1	0.9	-2.7	-69.51
		418	-2.3	-0.2	-0.9	0.4	-2.5	-60.65
		417	0.8	-0.3	-0.9	1.4	-0.5	-48.88

		NODE	Vxx	Vyy
	Max	Cent	6.1	1.3
		409	6.4	1.5
		410	6.4	1.2
		418	5.7	1.2
		417	5.7	1.5
	Min	Cent	5.3	1.0
		409	5.5	1.1
		410	5.5	0.8
		418	5.1	0.8
		417	5.1	1.1

ELEM	MAT	SEC	LC		NODE	Fxx	Fyy	Fxy	Fmax	Fmin	ANGLE
368	1	1	SX (RS)		Cent	0.8	0.3	1.0	1.6	-0.5	37.80
					410	1.1	0.3	1.0	1.8	-0.3	34.30
					411	1.1	0.3	1.0	1.8	-0.4	33.39
					419	0.5	0.3	1.0	1.4	-0.6	41.08
					418	0.5	0.3	1.0	1.5	-0.6	42.13

		NODE	Mxx	Myy	Mxy	Mmax	Mmin	ANGLE
		Cent	3.5	0.3	0.7	3.7	0.2	12.16
		410	4.0	0.4	0.8	4.1	0.3	11.93
		411	3.3	0.5	0.6	3.4	0.4	11.76
		419	3.3	0.3	0.7	3.4	0.2	12.34
		418	3.7	0.2	0.8	3.9	-0.0	12.85

		NODE	Vxx	Vyy

Cent	1.0	0.4	
410	1.2	0.4	
411	1.2	0.4	
419	0.8	0.4	
418	0.8	0.4	

LC		NODE	Fxx	Fyy	Fxy	Fmax	Fmin	ANGLE
SY (RS)		Cent	0.3	0.3	1.6	1.9	-1.2	45.12
		410	0.4	0.5	1.6	2.0	-1.1	45.54
		411	0.4	0.3	1.6	1.9	-1.2	44.08
		419	0.3	0.3	1.6	1.8	-1.3	45.33
		418	0.3	0.5	1.6	1.9	-1.2	46.78

	NODE	Mxx	Myy	Mxy	Mmax	Mmin	ANGLE
	Cent	0.5	2.2	0.5	2.3	0.4	74.27
	410	0.6	2.5	0.5	2.7	0.5	75.81
	411	0.5	2.2	0.6	2.4	0.3	72.84
	419	0.5	2.0	0.5	2.2	0.3	72.61
	418	0.5	2.1	0.5	2.2	0.4	75.17

	NODE	Vxx	Vyy
	Cent	0.1	0.6
	410	0.1	0.8
	411	0.1	0.4
	419	0.1	0.4
	418	0.1	0.8

LC		NODE	Fxx	Fyy	Fxy	Fmax	Fmin	ANGLE
RC ENV~1	Max	Cent	0.8	1.2	2.0	2.6	0.0	48.89
		410	1.3	1.4	2.0	2.9	0.3	48.85
		411	1.3	0.9	2.0	2.7	0.0	46.26
		419	0.5	0.9	2.0	2.5	-0.3	49.39
		418	0.5	1.4	2.0	2.7	-0.1	51.90
	Min	Cent	-0.9	0.2	-1.1	0.5	-1.5	-67.71
		410	-1.0	0.2	-1.1	0.5	-1.2	-70.39
		411	-1.0	0.1	-1.1	0.4	-1.4	-68.76
		419	-1.1	0.1	-1.1	0.4	-1.6	-64.93
		418	-1.1	0.2	-1.1	0.5	-1.5	-67.04

	NODE	Mxx	Myy	Mxy	Mmax	Mmin	ANGLE
Max	Cent	1.4	3.2	0.6	3.2	0.8	85.73
	410	2.9	3.8	0.5	3.8	1.5	86.61
	411	-0.2	3.3	0.4	3.3	-0.3	86.20
	419	0.1	2.9	0.7	2.9	-0.2	84.88
	418	2.6	2.9	0.7	3.0	0.7	84.46
Min	Cent	-5.7	-1.2	-1.2	-0.9	-5.8	-69.05
	410	-5.0	-1.3	-1.4	-0.7	-5.2	-51.39
	411	-6.9	-1.1	-1.2	-0.9	-7.0	-75.66
	419	-6.5	-1.1	-1.0	-1.0	-6.6	-78.69
	418	-4.7	-1.3	-1.2	-0.8	-4.9	-51.35

	NODE	Vxx	Vyy
Max	Cent	6.6	1.3
	410	7.0	1.7
	411	7.0	1.0
	419	6.3	1.0
	418	6.3	1.7
Min	Cent	3.0	0.1
	410	3.0	0.0
	411	3.0	0.1
	419	3.0	0.1
	418	3.0	0.0

LC		NODE	Fxx	Fyy	Fxy	Fmax	Fmin	ANGLE
RC ENV~2	Max	Cent	0.6	0.9	0.8	1.4	-0.0	55.08
		410	0.8	1.0	0.8	1.7	0.2	52.94
		411	0.8	0.7	0.8	1.5	0.0	47.04
		419	0.3	0.7	0.8	1.2	-0.2	57.10

418	0.3	1.0	0.8	1.5	-0.1	61.76
Min Cent	-0.6	0.5	0.3	0.6	-0.8	74.06
410	-0.5	0.5	0.3	0.6	-0.7	73.96
411	-0.5	0.4	0.3	0.5	-0.7	72.38
419	-0.7	0.4	0.3	0.5	-0.9	74.15
418	-0.7	0.5	0.3	0.6	-0.9	75.47

	NODE	Mxx	Myy	Mxy	Mmax	Mmin	ANGLE
Max	Cent	-1.2	1.0	-0.1	1.0	-1.3	-87.25
	410	0.1	1.3	-0.3	1.3	-0.1	-81.62
	411	-2.7	1.1	-0.2	1.1	-2.8	-87.81
	419	-2.4	0.9	0.0	0.9	-2.4	-89.50
	418	0.1	0.9	-0.1	0.9	-0.1	-81.96
Min	Cent	-3.8	-0.0	-0.8	0.2	-3.9	-73.23
	410	-2.7	0.2	-0.9	0.7	-2.9	-68.02
	411	-5.1	0.1	-0.8	0.3	-5.1	-79.51
	419	-4.7	-0.1	-0.6	0.0	-4.8	-81.41
	418	-2.6	-0.3	-0.8	0.2	-2.7	-66.11

	NODE	Vxx	Vyy
Max	Cent	4.9	1.0
	410	5.2	1.2
	411	5.2	0.7
	419	4.7	0.7
	418	4.7	1.2
Min	Cent	3.8	0.6
	410	3.9	0.8
	411	3.9	0.5
	419	3.7	0.5
	418	3.7	0.8

ELEM	MAT	SEC	LC		NODE	Fxx	Fyy	Fxy	Fmax	Fmin	ANGLE
369	1	1	SX (RS)		Cent	0.7	0.3	0.9	1.4	-0.4	38.24
					411	0.8	0.3	0.9	1.5	-0.4	36.28
					412	0.8	0.2	0.9	1.5	-0.4	35.40
					420	0.6	0.2	0.9	1.3	-0.5	39.38
					419	0.6	0.3	0.9	1.3	-0.5	40.32

	NODE	Mxx	Myy	Mxy	Mmax	Mmin	ANGLE
	Cent	2.8	0.4	0.5	2.8	0.3	10.70
	411	3.2	0.5	0.5	3.3	0.4	9.88
	412	2.3	0.5	0.4	2.4	0.4	11.04
	420	2.4	0.4	0.4	2.5	0.3	11.96
	419	3.1	0.3	0.6	3.2	0.2	10.62

	NODE	Vxx	Vyy
	Cent	1.5	0.4
	411	1.6	0.4
	412	1.6	0.4
	420	1.5	0.4
	419	1.5	0.4

LC		NODE	Fxx	Fyy	Fxy	Fmax	Fmin	ANGLE
SY (RS)		Cent	0.5	0.3	1.3	1.7	-1.0	43.22
		411	0.6	0.3	1.3	1.8	-0.9	41.86
		412	0.6	0.3	1.3	1.8	-0.9	41.77
		420	0.3	0.3	1.3	1.7	-1.0	44.73
		419	0.3	0.3	1.3	1.7	-1.0	44.82

	NODE	Mxx	Myy	Mxy	Mmax	Mmin	ANGLE
	Cent	0.6	2.1	0.6	2.3	0.4	70.57
	411	0.6	2.2	0.6	2.5	0.4	70.49
	412	0.6	2.2	0.7	2.5	0.4	70.12
	420	0.6	2.0	0.6	2.2	0.4	70.85
	419	0.6	2.0	0.5	2.2	0.4	71.03

	NODE	Vxx	Vyy
	Cent	0.1	0.4
	411	0.2	0.4

		412	0.2	0.4				
		420	0.1	0.4				
		419	0.1	0.4				

LC		NODE	Fxx	Fyy	Fxy	Fmax	Fmin	ANGLE
RC ENV~1	Max	Cent	0.8	0.9	1.7	2.2	0.2	47.53
		411	0.9	0.9	1.7	2.4	0.2	45.53
		412	0.9	0.9	1.7	2.4	0.2	45.40
		420	0.6	0.9	1.7	2.2	0.1	49.61
		419	0.6	0.9	1.7	2.2	0.1	49.74
	Min	Cent	-1.0	0.1	-1.0	0.4	-1.2	-64.19
		411	-0.8	0.1	-1.0	0.4	-1.3	-64.59
		412	-0.8	0.1	-1.0	0.5	-1.3	-65.39
		420	-1.1	0.1	-1.0	0.5	-1.2	-64.68
		419	-1.1	0.1	-1.0	0.4	-1.2	-63.84

		NODE	Mxx	Myy	Mxy	Mmax	Mmin	ANGLE
	Max	Cent	-1.3	3.0	0.7	3.1	-1.4	83.68
		411	-0.4	3.3	0.7	3.4	-0.6	83.96
		412	-2.5	3.1	0.8	3.2	-2.6	83.52
		420	-2.1	2.8	0.8	2.8	-2.2	83.37
		419	-0.2	2.8	0.6	2.9	-0.4	83.85
	Min	Cent	-7.4	-1.2	-0.7	-1.2	-7.4	-82.05
		411	-7.0	-1.2	-0.8	-1.0	-7.1	-78.88
		412	-8.4	-1.3	-0.6	-1.3	-8.4	-83.39
		420	-7.7	-1.3	-0.6	-1.2	-7.8	-84.79
		419	-6.6	-1.2	-0.8	-1.1	-6.6	-80.30

		NODE	Vxx	Vyy
	Max	Cent	3.8	1.0
		411	3.9	1.0
		412	3.9	0.9
		420	3.7	0.9
		419	3.7	1.0
	Min	Cent	0.6	0.1
		411	0.6	0.1
		412	0.6	0.0
		420	0.5	0.0
		419	0.5	0.1

LC		NODE	Fxx	Fyy	Fxy	Fmax	Fmin	ANGLE
RC ENV~2	Max	Cent	0.5	0.7	0.6	1.0	0.1	57.21
		411	0.6	0.7	0.6	1.1	0.2	52.36
		412	0.6	0.7	0.6	1.1	0.1	52.51
		420	0.4	0.7	0.6	1.0	0.0	61.42
		419	0.4	0.7	0.6	1.0	0.0	61.31
	Min	Cent	-0.7	0.4	0.2	0.5	-0.7	77.04
		411	-0.5	0.4	0.2	0.5	-0.6	76.06
		412	-0.5	0.4	0.2	0.5	-0.6	76.18
		420	-0.8	0.4	0.2	0.5	-0.9	77.91
		419	-0.8	0.4	0.2	0.5	-0.9	77.82

		NODE	Mxx	Myy	Mxy	Mmax	Mmin	ANGLE
	Max	Cent	-3.6	0.9	0.1	0.9	-3.6	88.87
		411	-2.9	1.1	0.0	1.1	-3.0	89.87
		412	-4.6	0.9	0.2	0.9	-4.6	88.37
		420	-4.2	0.7	0.2	0.8	-4.2	87.90
		419	-2.7	0.9	0.1	0.9	-2.7	89.48
	Min	Cent	-5.4	-0.1	-0.4	-0.1	-5.5	-85.79
		411	-5.1	0.1	-0.5	0.1	-5.1	-83.61
		412	-6.2	-0.1	-0.3	-0.1	-6.2	-87.31
		420	-5.7	-0.2	-0.3	-0.2	-5.7	-87.74
		419	-4.8	-0.1	-0.5	-0.1	-4.8	-83.58

		NODE	Vxx	Vyy
	Max	Cent	2.8	0.7
		411	2.9	0.7
		412	2.9	0.7
		420	2.7	0.7
		419	2.7	0.7
	Min	Cent	1.6	0.4

					411	1.7	0.5				
					412	1.7	0.3				
					420	1.6	0.3				
					419	1.6	0.5				
ELEM	MAT	SEC	LC		NODE	Fxx	Fyy	Fxy	Fmax	Fmin	ANGLE
370	1	1	SX (RS)		Cent	0.5	0.2	0.9	1.2	-0.5	41.08
					412	0.5	0.2	0.9	1.3	-0.5	40.89
					413	0.5	0.2	0.9	1.2	-0.5	40.40
					421	0.5	0.2	0.9	1.2	-0.5	40.47
					420	0.5	0.2	0.9	1.3	-0.5	40.97
					NODE	Mxx	Myy	Mxy	Mmax	Mmin	ANGLE
					Cent	1.8	0.4	0.2	1.9	0.4	9.64
					412	2.3	0.5	0.3	2.3	0.4	8.37
					413	1.4	0.5	0.2	1.4	0.5	9.85
					421	1.5	0.4	0.2	1.6	0.4	11.94
					420	2.3	0.4	0.3	2.3	0.3	9.84
					NODE	Vxx	Vyy				
					Cent	1.7	0.4				
					412	1.7	0.4				
					413	1.7	0.4				
					421	1.6	0.4				
					420	1.6	0.4				
			LC		NODE	Fxx	Fyy	Fxy	Fmax	Fmin	ANGLE
			SY (RS)		Cent	0.6	0.4	1.3	1.8	-0.8	42.48
					412	0.8	0.3	1.3	1.9	-0.8	40.22
					413	0.8	0.4	1.3	1.9	-0.7	41.22
					421	0.4	0.4	1.3	1.7	-0.9	44.66
					420	0.4	0.3	1.3	1.7	-0.9	43.64
					NODE	Mxx	Myy	Mxy	Mmax	Mmin	ANGLE
					Cent	0.6	2.2	0.6	2.4	0.5	71.93
					412	0.7	2.2	0.7	2.5	0.4	69.05
					413	0.7	2.5	0.6	2.7	0.5	72.63
					421	0.6	2.2	0.5	2.4	0.5	74.93
					420	0.6	2.0	0.5	2.2	0.4	71.21
					NODE	Vxx	Vyy				
					Cent	0.2	0.4				
					412	0.3	0.4				
					413	0.3	0.5				
					421	0.2	0.5				
					420	0.2	0.4				
			LC		NODE	Fxx	Fyy	Fxy	Fmax	Fmin	ANGLE
			RC ENV~1	Max	Cent	0.6	1.0	1.5	2.2	0.2	47.80
					412	0.8	0.9	1.5	2.3	0.3	44.59
					413	0.8	1.0	1.5	2.3	0.3	45.92
					421	0.5	1.0	1.5	2.1	0.2	50.86
					420	0.5	0.9	1.5	2.0	0.2	49.57
				Min	Cent	-1.0	0.1	-1.1	0.6	-1.5	82.20
					412	-0.7	0.1	-1.1	0.5	-1.5	80.80
					413	-0.7	0.0	-1.1	0.6	-1.5	81.38
					421	-1.2	0.0	-1.1	0.6	-1.5	83.24
					420	-1.2	0.1	-1.1	0.5	-1.5	82.88
					NODE	Mxx	Myy	Mxy	Mmax	Mmin	ANGLE
				Max	Cent	-2.7	2.9	1.1	3.1	-2.9	81.41
					412	-2.6	3.1	1.1	3.3	-2.7	81.37
					413	-3.3	3.2	1.3	3.4	-3.5	80.40
					421	-2.9	2.6	1.0	2.7	-3.0	81.49
					420	-2.1	2.8	0.9	2.9	-2.2	82.69
				Min	Cent	-7.5	-1.6	-0.1	-1.6	-7.5	-88.49
					412	-8.2	-1.3	-0.2	-1.3	-8.2	-86.89
					413	-7.5	-1.8	0.0	-1.8	-7.5	89.90

421	-7.1	-1.9	-0.1	-1.9	-7.1	89.55
420	-7.4	-1.2	-0.4	-1.2	-7.5	-86.82

	NODE	Vxx	Vyy
Max	Cent	1.5	1.2
	412	1.4	0.9
	413	1.4	1.6
	421	1.5	1.6
	420	1.5	0.9
Min	Cent	-1.9	0.2
	412	-2.0	0.0
	413	-2.0	0.3
	421	-1.7	0.3
	420	-1.7	0.0

LC		NODE	Fxx	Fyy	Fxy	Fmax	Fmin	ANGLE
RC ENV~2	Max	Cent	0.4	0.7	0.3	0.8	0.2	67.73
		412	0.5	0.6	0.3	0.8	0.2	62.15
		413	0.5	0.8	0.3	0.9	0.2	64.53
		421	0.3	0.8	0.3	0.8	0.1	71.74
		420	0.3	0.6	0.3	0.8	0.1	70.34
	Min	Cent	-0.7	0.4	0.1	0.4	-0.7	81.18
		412	-0.5	0.4	0.1	0.4	-0.5	79.54
		413	-0.5	0.4	0.1	0.5	-0.5	80.22
		421	-0.8	0.4	0.1	0.5	-0.8	82.38
		420	-0.8	0.4	0.1	0.4	-0.8	81.97

	NODE	Mxx	Myy	Mxy	Mmax	Mmin	ANGLE
Max	Cent	-4.5	0.7	0.5	0.7	-4.5	85.08
	412	-4.6	0.9	0.5	0.9	-4.6	85.78
	413	-4.6	0.7	0.6	0.8	-4.7	83.63
	421	-4.4	0.3	0.5	0.4	-4.4	83.75
	420	-4.1	0.8	0.3	0.8	-4.1	86.75
Min	Cent	-5.6	-0.4	0.0	-0.3	-5.6	88.59
	412	-6.1	-0.1	-0.0	-0.1	-6.1	89.04
	413	-5.6	-0.4	0.2	-0.4	-5.6	86.36
	421	-5.3	-0.7	0.0	-0.7	-5.3	89.79
	420	-5.5	-0.2	-0.2	-0.2	-5.5	-88.96

	NODE	Vxx	Vyy
Max	Cent	0.3	0.9
	412	0.2	0.7
	413	0.2	1.1
	421	0.4	1.1
	420	0.4	0.7
Min	Cent	-0.9	0.5
	412	-1.1	0.3
	413	-1.1	0.7
	421	-0.8	0.7
	420	-0.8	0.3

ELEM	MAT	SEC	LC		NODE	Fxx	Fyy	Fxy	Fmax	Fmin	ANGLE
371	1	1	SX (RS)		Cent	0.3	0.3	1.0	1.2	-0.7	45.01
					413	0.2	0.2	1.0	1.2	-0.8	45.64
					414	0.2	0.3	1.0	1.2	-0.7	46.84
					422	0.4	0.3	1.0	1.3	-0.6	43.87
					421	0.4	0.2	1.0	1.3	-0.7	42.68

	NODE	Mxx	Myy	Mxy	Mmax	Mmin	ANGLE
	Cent	1.1	0.4	0.2	1.1	0.4	14.97
	413	1.3	0.5	0.1	1.3	0.4	7.88
	414	0.7	0.4	0.2	0.8	0.3	30.35
	422	1.0	0.5	0.3	1.1	0.4	23.03
	421	1.5	0.4	0.2	1.5	0.4	9.90

	NODE	Vxx	Vyy
	Cent	1.5	0.5
	413	1.7	0.4
	414	1.7	0.6
	422	1.4	0.6

		421	1.4	0.4			

LC		NODE	Fxx	Fyy	Fxy	Fmax	Fmin	ANGLE
SY (RS)		Cent	0.7	0.5	1.5	2.1	-0.8	43.06
		413	1.0	0.4	1.5	2.2	-0.8	39.65
		414	1.0	0.7	1.5	2.3	-0.6	42.13
		422	0.5	0.7	1.5	2.1	-0.9	46.69
		421	0.5	0.4	1.5	1.9	-1.0	44.17

		NODE	Mxx	Myy	Mxy	Mmax	Mmin	ANGLE
		Cent	0.7	2.6	0.4	2.7	0.6	78.98
		413	0.9	2.4	0.6	2.6	0.7	72.23
		414	0.8	3.2	0.4	3.3	0.7	80.44
		422	0.6	2.6	0.2	2.6	0.6	82.83
		421	0.6	2.2	0.4	2.3	0.6	77.76

		NODE	Vxx	Vyy
		Cent	0.1	0.9
		413	0.1	0.5
		414	0.1	1.2
		422	0.2	1.2
		421	0.2	0.5

LC		NODE	Fxx	Fyy	Fxy	Fmax	Fmin	ANGLE
RC ENV~1	Max	Cent	0.6	1.3	1.5	2.3	0.3	49.54
		413	1.0	1.0	1.5	2.4	0.3	44.22
		414	1.0	1.5	1.5	2.6	0.3	48.31
		422	0.3	1.5	1.5	2.4	0.2	54.72
		421	0.3	1.0	1.5	2.1	0.2	50.92
	Min	Cent	-0.9	0.0	-1.4	0.6	-1.9	77.91
		413	-1.0	0.0	-1.4	0.5	-2.0	71.76
		414	-1.0	-0.1	-1.4	0.7	-2.1	77.19
		422	-1.2	-0.1	-1.4	0.7	-1.9	81.07
		421	-1.2	0.0	-1.4	0.5	-1.9	78.56

		NODE	Mxx	Myy	Mxy	Mmax	Mmin	ANGLE
	Max	Cent	-2.6	2.9	1.2	3.1	-2.9	78.81
		413	-3.1	3.1	1.5	3.4	-3.4	78.27
		414	-2.3	3.6	1.4	3.9	-2.6	76.93
		422	-2.2	2.1	1.0	2.3	-2.5	78.91
		421	-2.5	2.6	0.9	2.8	-2.7	81.28
	Min	Cent	-5.6	-2.3	0.4	-2.2	-5.6	78.51
		413	-7.0	-1.7	0.4	-1.6	-7.0	84.47
		414	-4.6	-2.8	0.6	-2.5	-4.9	65.62
		422	-4.8	-3.0	0.3	-2.8	-4.8	65.60
		421	-6.2	-1.8	0.0	-1.8	-6.2	85.46

		NODE	Vxx	Vyy
	Max	Cent	-0.6	2.2
		413	-0.8	1.6
		414	-0.8	2.9
		422	-0.4	2.9
		421	-0.4	1.6
	Min	Cent	-4.5	0.3
		413	-5.0	0.3
		414	-5.0	0.3
		422	-3.9	0.3
		421	-3.9	0.3

LC		NODE	Fxx	Fyy	Fxy	Fmax	Fmin	ANGLE
RC ENV~2	Max	Cent	0.2	0.9	0.1	0.9	0.2	-88.99
		413	0.3	0.8	0.1	0.8	0.2	-88.62
		414	0.3	1.1	0.1	1.1	0.2	-88.93
		422	0.2	1.1	0.1	1.1	0.1	-89.21
		421	0.2	0.8	0.1	0.8	0.1	-89.04
	Min	Cent	-0.6	0.4	-0.1	0.5	-0.6	79.88
		413	-0.4	0.4	-0.1	0.4	-0.4	74.76
		414	-0.4	0.5	-0.1	0.5	-0.4	79.28
		422	-0.9	0.5	-0.1	0.5	-0.9	82.48

421	-0.9	0.4	-0.1	0.4	-0.9	80.41

	NODE	Mxx	Myy	Mxy	Mmax	Mmin	ANGLE
Max	Cent	-3.7	0.3	0.8	0.4	-3.8	78.47
	413	-4.4	0.8	0.9	0.9	-4.5	80.57
	414	-3.1	0.4	1.0	0.7	-3.3	74.91
	422	-3.1	-0.4	0.7	-0.3	-3.3	76.08
	421	-4.0	0.4	0.6	0.5	-4.0	82.32
Min	Cent	-4.2	-0.9	0.4	-0.8	-4.3	81.83
	413	-5.2	-0.3	0.6	-0.2	-5.3	81.77
	414	-3.5	-0.9	0.7	-0.6	-3.7	71.75
	422	-3.6	-1.8	0.3	-1.7	-3.7	78.67
	421	-4.7	-0.6	0.1	-0.6	-4.7	88.28

	NODE	Vxx	Vyy
Max	Cent	-1.9	1.6
	413	-2.2	1.1
	414	-2.2	2.1
	422	-1.5	2.1
	421	-1.5	1.1
Min	Cent	-3.2	1.1
	413	-3.7	0.7
	414	-3.7	1.5
	422	-2.8	1.5
	421	-2.8	0.7

ELEM	MAT	SEC	LC		NODE	Fxx	Fyy	Fxy	Fmax	Fmin	ANGLE
372	1	1	SX	(RS)	Cent	0.2	0.3	1.0	1.2	-0.7	45.43
					414	0.3	0.3	1.0	1.3	-0.7	45.67
					415	0.3	0.2	1.0	1.2	-0.8	44.22
					423	0.2	0.2	1.0	1.2	-0.8	45.00
					422	0.2	0.3	1.0	1.3	-0.7	46.45

NODE	Mxx	Myy	Mxy	Mmax	Mmin	ANGLE
Cent	0.7	0.4	0.5	1.0	0.1	37.24
414	0.6	0.4	0.3	0.9	0.1	37.83
415	0.6	0.4	0.5	1.0	-0.0	40.00
423	0.7	0.4	0.6	1.1	-0.0	38.07
422	1.0	0.5	0.4	1.2	0.3	30.12

NODE	Vxx	Vyy
Cent	0.8	0.4
414	0.8	0.6
415	0.8	0.2
423	0.8	0.2
422	0.8	0.6

LC		NODE	Fxx	Fyy	Fxy	Fmax	Fmin	ANGLE
SY	(RS)	Cent	0.7	1.0	1.4	2.3	-0.5	47.70
		414	0.9	0.7	1.4	2.2	-0.6	42.62
		415	0.9	1.4	1.4	2.6	-0.3	49.97
		423	0.6	1.4	1.4	2.4	-0.4	53.06
		422	0.6	0.7	1.4	2.0	-0.8	45.87

NODE	Mxx	Myy	Mxy	Mmax	Mmin	ANGLE
Cent	0.8	3.0	0.2	3.0	0.8	85.37
414	1.1	3.1	0.2	3.1	1.1	83.66
415	0.8	3.8	0.2	3.9	0.8	86.86
423	0.6	2.6	0.3	2.7	0.6	82.37
422	0.7	2.5	0.2	2.6	0.7	84.23

NODE	Vxx	Vyy
Cent	0.5	1.8
414	0.8	1.2
415	0.8	2.4
423	0.2	2.4
422	0.2	1.2

LC		NODE	Fxx	Fyy	Fxy	Fmax	Fmin	ANGLE
RC ENV~1	Max	Cent	0.5	1.7	1.3	2.6	0.1	57.74
		414	0.7	1.4	1.3	2.3	0.2	50.98
		415	0.7	2.2	1.3	3.0	0.2	60.11
		423	0.3	2.2	1.3	2.9	0.1	63.60
		422	0.3	1.4	1.3	2.2	0.1	55.60
	Min	Cent	-1.1	-0.3	-1.5	0.7	-2.2	84.59
		414	-1.1	-0.1	-1.5	0.6	-2.1	81.10
		415	-1.1	-0.5	-1.5	0.7	-2.3	-50.36
		423	-1.3	-0.5	-1.5	0.7	-2.2	-48.74
		422	-1.3	-0.1	-1.5	0.6	-2.0	83.73

		NODE	Mxx	Myy	Mxy	Mmax	Mmin	ANGLE
	Max	Cent	-1.0	2.7	1.3	3.0	-1.3	75.48
		414	-1.4	3.6	1.5	3.9	-1.7	75.84
		415	0.3	3.8	1.5	4.2	-0.1	74.00
		423	-0.9	1.2	1.1	1.5	-1.2	71.20
		422	-1.6	2.2	1.1	2.4	-2.0	78.37
	Min	Cent	-2.7	-3.3	0.4	-2.2	-3.7	30.26
		414	-3.7	-2.6	0.8	-2.0	-4.1	59.47
		415	-1.4	-3.8	0.5	-1.1	-4.1	16.50
		423	-2.3	-4.4	-0.0	-2.2	-4.4	11.04
		422	-3.7	-2.9	0.3	-2.5	-3.8	55.55

		NODE	Vxx	Vyy
	Max	Cent	-2.0	3.8
		414	-2.8	2.9
		415	-2.8	4.8
		423	-1.3	4.8
		422	-1.3	2.9
	Min	Cent	-5.3	0.2
		414	-6.3	0.3
		415	-6.3	-0.0
		423	-4.2	-0.0
		422	-4.2	0.3

LC		NODE	Fxx	Fyy	Fxy	Fmax	Fmin	ANGLE
RC ENV~2	Max	Cent	0.1	1.2	0.0	1.3	0.1	-84.25
		414	0.1	1.0	0.0	1.1	0.1	-83.05
		415	0.1	1.5	0.0	1.5	0.1	-84.42
		423	0.0	1.5	0.0	1.5	0.0	-85.09
		422	0.0	1.0	0.0	1.1	0.0	-84.06
	Min	Cent	-0.8	0.6	-0.2	0.6	-0.8	86.97
		414	-0.6	0.5	-0.2	0.5	-0.7	85.33
		415	-0.6	0.7	-0.2	0.7	-0.7	87.29
		423	-0.9	0.7	-0.2	0.7	-0.9	87.76
		422	-0.9	0.5	-0.2	0.5	-0.9	86.56

		NODE	Mxx	Myy	Mxy	Mmax	Mmin	ANGLE
	Max	Cent	-1.3	-0.3	0.9	0.1	-2.0	65.23
		414	-2.3	0.5	1.1	0.9	-2.7	71.82
		415	0.2	0.0	1.0	0.7	-1.2	53.43
		423	-0.9	-1.4	0.6	-0.9	-2.0	4.96
		422	-2.3	-0.3	0.7	-0.1	-2.4	73.82
	Min	Cent	-2.0	-1.7	0.5	-1.0	-2.4	49.56
		414	-2.8	-0.7	0.9	-0.2	-3.1	64.08
		415	-0.7	-1.5	0.7	0.2	-2.0	44.70
		423	-1.8	-3.1	0.2	-1.6	-3.1	17.40
		422	-2.8	-1.6	0.3	-1.5	-2.9	68.72

		NODE	Vxx	Vyy
	Max	Cent	-2.8	2.6
		414	-3.5	2.1
		415	-3.5	3.0
		423	-2.1	3.0
		422	-2.1	2.1
	Min	Cent	-3.9	1.9
		414	-4.7	1.5
		415	-4.7	2.3
		423	-3.1	2.3
		422	-3.1	1.5

ELEM	MAT	SEC	LC		NODE	Fxx	Fyy	Fxy	Fmax	Fmin	ANGLE
373	1	1	SX	(RS)	Cent	0.0	0.1	1.0	1.1	-0.9	46.64
					415	0.1	0.3	1.0	1.2	-0.8	46.96
					416	0.1	0.0	1.0	1.1	-0.9	43.41
					424	0.1	0.0	1.0	1.1	-0.9	43.39
					423	0.1	0.3	1.0	1.2	-0.8	46.94

	NODE	Mxx	Myy	Mxy	Mmax	Mmin	ANGLE
	Cent	0.4	0.2	0.7	1.0	-0.5	41.13
	415	0.4	0.4	0.7	1.1	-0.3	45.66
	416	0.8	0.2	0.9	1.4	-0.4	35.08
	424	0.1	0.0	0.8	0.9	-0.7	42.97
	423	0.5	0.5	0.7	1.2	-0.2	43.18

	NODE	Vxx	Vyy
	Cent	0.7	0.1
	415	0.9	0.2
	416	0.9	0.0
	424	0.8	0.0
	423	0.8	0.2

LC		NODE	Fxx	Fyy	Fxy	Fmax	Fmin	ANGLE
SY	(RS)	Cent	0.8	1.5	0.6	1.9	0.5	61.24
		415	1.0	1.4	0.6	1.8	0.6	53.37
		416	1.0	1.7	0.6	2.1	0.7	61.21
		424	0.6	1.7	0.6	2.0	0.4	66.89
		423	0.6	1.4	0.6	1.7	0.3	60.98

	NODE	Mxx	Myy	Mxy	Mmax	Mmin	ANGLE
	Cent	0.7	3.2	0.1	3.2	0.7	86.66
	415	0.8	3.9	0.2	3.9	0.8	85.93
	416	0.8	3.9	0.1	3.9	0.8	88.36
	424	0.7	2.5	0.1	2.5	0.7	87.90
	423	0.7	2.6	0.2	2.6	0.7	83.86

	NODE	Vxx	Vyy
	Cent	0.3	2.4
	415	0.4	2.4
	416	0.4	2.5
	424	0.2	2.5
	423	0.2	2.4

LC		NODE	Fxx	Fyy	Fxy	Fmax	Fmin	ANGLE
RC ENV~1	Max	Cent	0.4	2.4	1.0	2.6	0.3	75.92
		415	0.7	2.2	1.0	2.4	0.5	72.25
		416	0.7	2.7	1.0	2.8	0.6	76.01
		424	0.2	2.7	1.0	2.8	0.1	78.33
		423	0.2	2.2	1.0	2.3	0.1	75.72
	Min	Cent	-1.2	-0.7	-1.1	-0.2	-1.6	-55.83
		415	-1.3	-0.5	-1.1	-0.2	-1.7	-60.99
		416	-1.3	-0.8	-1.1	-0.4	-1.7	-56.19
		424	-1.4	-0.8	-1.1	-0.3	-1.6	-50.19
		423	-1.4	-0.5	-1.1	-0.1	-1.5	-55.79

		NODE	Mxx	Myy	Mxy	Mmax	Mmin	ANGLE
	Max	Cent	1.2	2.4	1.0	2.5	0.4	78.26
		415	1.2	4.0	1.2	4.2	0.5	77.21
		416	2.8	3.7	1.0	3.8	1.6	82.92
		424	0.8	0.6	0.8	0.8	0.0	-1.76
		423	-0.0	1.3	1.0	1.4	-0.5	72.50
	Min	Cent	-0.9	-4.1	-0.5	-0.9	-4.1	2.31
		415	-0.9	-3.8	-0.1	-0.8	-3.8	6.67
		416	-0.0	-4.1	-0.7	-0.0	-4.1	1.21
		424	-1.3	-5.3	-0.9	-1.3	-5.4	-2.04
		423	-1.8	-4.2	-0.3	-1.7	-4.2	3.94

	NODE	Vxx	Vyy

Max	Cent	-0.6	5.0
	415	-0.8	4.8
	416	-0.8	5.2
	424	-0.1	5.2
	423	-0.1	4.8
Min	Cent	-2.4	0.1
	415	-3.1	-0.0
	416	-3.1	0.2
	424	-1.9	0.2
	423	-1.9	-0.0

LC		NODE	Fxx	Fyy	Fxy	Fmax	Fmin	ANGLE
RC ENV~2	Max	Cent	-0.1	1.5	0.1	1.5	-0.1	-86.11
		415	-0.1	1.4	0.1	1.4	-0.1	-85.75
		416	-0.1	1.6	0.1	1.6	-0.1	-86.04
		424	-0.1	1.6	0.1	1.6	-0.1	-86.40
		423	-0.1	1.4	0.1	1.4	-0.1	-86.17
	Min	Cent	-0.8	0.8	-0.2	0.8	-0.8	86.76
		415	-0.7	0.7	-0.2	0.7	-0.7	86.42
		416	-0.7	0.9	-0.2	0.9	-0.7	-89.95
		424	-1.0	0.9	-0.2	0.9	-1.0	-89.95
		423	-1.0	0.7	-0.2	0.7	-1.0	86.42

	NODE	Mxx	Myy	Mxy	Mmax	Mmin	ANGLE
Max	Cent	0.8	-0.8	0.3	0.8	-0.9	0.13
	415	0.8	0.1	0.6	0.8	-0.4	8.74
	416	2.0	-0.2	0.3	2.0	-0.2	-1.22
	424	0.4	-1.9	0.0	0.5	-1.9	-1.58
	423	-0.1	-1.3	0.4	-0.1	-1.5	4.53
Min	Cent	-0.3	-2.5	-0.1	-0.2	-2.5	6.41
	415	-0.1	-1.4	0.3	0.1	-1.5	24.90
	416	0.7	-1.9	-0.2	0.8	-1.9	11.14
	424	-0.7	-3.8	-0.4	-0.6	-3.8	-3.81
	423	-1.1	-2.9	0.0	-1.1	-2.9	1.85

	NODE	Vxx	Vyy
Max	Cent	-1.3	3.3
	415	-1.7	3.0
	416	-1.7	3.5
	424	-0.8	3.5
	423	-0.8	3.0
Min	Cent	-1.8	2.5
	415	-2.3	2.3
	416	-2.3	2.7
	424	-1.4	2.7
	423	-1.4	2.3

ELEM	MAT	SEC	LC		NODE	Fxx	Fyy	Fxy	Fmax	Fmin	ANGLE
374	1	1	SX (RS)		Cent	0.3	0.6	0.5	1.0	-0.1	52.36
					145	0.3	0.7	0.5	1.1	-0.1	57.22
					417	0.3	0.5	0.5	0.9	-0.2	50.17
					425	0.4	0.5	0.5	0.9	-0.1	47.20
					148	0.4	0.7	0.5	1.1	0.0	54.62

	NODE	Mxx	Myy	Mxy	Mmax	Mmin	ANGLE
	Cent	2.9	0.8	1.4	3.5	0.1	26.33
	145	2.4	0.9	1.4	3.2	0.0	31.21
	417	3.2	0.5	1.3	3.8	-0.1	22.32
	425	3.4	0.6	1.3	3.9	0.1	21.48
	148	2.4	1.1	1.4	3.3	0.3	32.32

	NODE	Vxx	Vyy
	Cent	1.8	0.4
	145	1.7	0.5
	417	1.7	0.4
	425	2.0	0.4
	148	2.0	0.5

LC		NODE	Fxx	Fyy	Fxy	Fmax	Fmin	ANGLE

SY (RS)	Cent	0.1	0.8	1.1	1.6	-0.7	54.25
	145	0.3	1.0	1.1	1.8	-0.5	52.58
	417	0.3	0.7	1.1	1.7	-0.6	49.49
	425	0.3	0.7	1.1	1.6	-0.7	50.57
	148	0.3	1.0	1.1	1.8	-0.6	53.61

	NODE	Mxx	Myy	Mxy	Mmax	Mmin	ANGLE
	Cent	0.2	1.8	0.2	1.8	0.2	83.32
	145	0.4	2.3	0.2	2.3	0.4	84.20
	417	0.4	2.2	0.2	2.2	0.3	83.22
	425	0.2	1.4	0.2	1.5	0.2	80.20
	148	0.2	1.4	0.2	1.4	0.2	81.97

	NODE	Vxx	Vyy
	Cent	0.2	1.7
	145	0.1	1.8
	417	0.1	1.5
	425	0.5	1.5
	148	0.5	1.8

LC		NODE	Fxx	Fyy	Fxy	Fmax	Fmin	ANGLE
RC ENV~1	Max	Cent	0.1	1.9	1.5	2.5	-0.0	61.33
		145	0.1	2.1	1.5	2.8	-0.0	60.57
		417	0.1	1.7	1.5	2.5	-0.0	57.71
		425	0.1	1.7	1.5	2.4	-0.1	58.86
		148	0.1	2.1	1.5	2.7	-0.1	61.60
	Min	Cent	-0.9	0.1	-0.8	0.4	-1.1	-79.79
		145	-0.8	0.0	-0.8	0.3	-1.1	-77.63
		417	-0.8	0.1	-0.8	0.4	-1.0	-79.66
		425	-1.0	0.1	-0.8	0.4	-1.2	-81.27
		148	-1.0	0.0	-0.8	0.3	-1.2	-79.84

		NODE	Mxx	Myy	Mxy	Mmax	Mmin	ANGLE
	Max	Cent	7.3	3.2	1.3	7.4	3.2	-6.63
		145	9.1	3.8	1.3	9.1	3.8	-5.76
		417	5.5	3.2	1.3	5.9	2.6	16.22
		425	6.0	2.7	1.3	6.3	2.5	16.01
		148	9.5	3.1	1.3	9.6	3.1	-6.29
	Min	Cent	1.2	-0.5	-1.4	2.4	-0.6	-38.80
		145	3.3	-0.8	-1.5	4.0	-0.8	-24.72
		417	-0.9	-1.3	-1.4	1.3	-1.8	-58.29
		425	-0.9	-0.2	-1.3	1.4	-1.6	-59.56
		148	3.4	0.4	-1.4	4.0	-0.0	-23.21

		NODE	Vxx	Vyy
	Max	Cent	8.7	1.3
		145	8.9	1.4
		417	8.9	1.1
		425	8.6	1.1
		148	8.6	1.4
	Min	Cent	3.9	-2.1
		145	4.1	-2.2
		417	4.1	-2.0
		425	3.6	-2.0
		148	3.6	-2.2

LC		NODE	Fxx	Fyy	Fxy	Fmax	Fmin	ANGLE
RC ENV~2	Max	Cent	0.0	1.4	0.6	1.6	-0.1	73.75
		145	0.0	1.6	0.6	1.7	-0.1	74.32
		417	0.0	1.2	0.6	1.4	-0.1	72.07
		425	-0.0	1.2	0.6	1.4	-0.1	73.15
		148	-0.0	1.6	0.6	1.7	-0.1	75.18
	Min	Cent	-0.6	0.8	0.3	0.9	-0.8	72.56
		145	-0.6	0.7	0.3	0.8	-0.7	71.35
		417	-0.6	0.8	0.3	0.9	-0.7	73.07
		425	-0.7	0.8	0.3	0.9	-0.9	73.63
		148	-0.7	0.7	0.3	0.8	-0.8	72.01

		NODE	Mxx	Myy	Mxy	Mmax	Mmin	ANGLE
	Max	Cent	5.4	1.4	-0.1	5.4	1.4	-6.02

		145	6.8	1.5	-0.1	6.8	1.5	-5.23
		417	3.5	1.0	-0.0	3.6	1.0	-6.55
		425	4.1	1.2	-0.0	4.2	1.2	-7.06
		148	7.1	1.8	-0.1	7.1	1.8	-5.64
	Min	Cent	3.0	0.3	-0.8	3.0	0.2	-11.15
		145	4.8	0.4	-0.9	4.8	0.3	-7.32
		417	1.0	-0.3	-0.8	1.4	-0.5	-41.93
		425	1.2	0.4	-0.7	1.4	0.2	-38.43
		148	4.9	0.8	-0.8	4.9	0.7	-5.24

	NODE	Vxx	Vyy
Max	Cent	6.6	-0.1
	145	6.7	-0.1
	417	6.7	-0.1
	425	6.5	-0.1
	148	6.5	-0.1
Min	Cent	5.2	-1.1
	145	5.4	-1.0
	417	5.4	-1.2
	425	5.1	-1.2
	148	5.1	-1.0

ELEM	MAT	SEC	LC		NODE	Fxx	Fyy	Fxy	Fmax	Fmin	ANGLE
375	1	1	SX (RS)		Cent	0.5	0.4	0.6	1.1	-0.2	42.08
					417	0.5	0.5	0.6	1.1	-0.2	44.33
					418	0.5	0.4	0.6	1.1	-0.2	41.91
					426	0.7	0.4	0.6	1.2	-0.2	38.55
					425	0.7	0.5	0.6	1.2	-0.1	40.90

	NODE	Mxx	Myy	Mxy	Mmax	Mmin	ANGLE
	Cent	3.6	0.5	1.1	4.0	0.1	17.44
	417	3.5	0.5	1.2	3.9	0.1	19.48
	418	3.6	0.3	1.1	4.0	0.0	16.30
	426	3.8	0.4	1.0	4.1	0.1	15.42
	425	3.7	0.7	1.2	4.1	0.3	18.91

	NODE	Vxx	Vyy
	Cent	0.4	0.4
	417	0.4	0.4
	418	0.4	0.5
	426	0.4	0.5
	425	0.4	0.4

LC		NODE	Fxx	Fyy	Fxy	Fmax	Fmin	ANGLE
SY (RS)		Cent	0.2	0.6	1.6	1.9	-1.2	48.63
		417	0.3	0.7	1.6	2.1	-1.1	48.83
		418	0.3	0.4	1.6	1.9	-1.2	46.19
		426	0.2	0.4	1.6	1.9	-1.3	47.38
		425	0.2	0.7	1.6	2.0	-1.2	49.99

	NODE	Mxx	Myy	Mxy	Mmax	Mmin	ANGLE
	Cent	0.4	1.8	0.3	1.9	0.3	77.47
	417	0.5	2.2	0.3	2.3	0.4	80.57
	418	0.4	2.1	0.4	2.1	0.3	77.88
	426	0.4	1.5	0.4	1.6	0.3	72.62
	425	0.3	1.4	0.3	1.5	0.2	76.46

	NODE	Vxx	Vyy
	Cent	0.3	1.3
	417	0.1	1.5
	418	0.1	1.1
	426	0.5	1.1
	425	0.5	1.5

LC		NODE	Fxx	Fyy	Fxy	Fmax	Fmin	ANGLE
RC ENV~1	Max	Cent	0.3	1.6	2.0	2.8	0.1	54.62
		417	0.4	1.7	2.0	3.0	0.2	54.55
		418	0.4	1.4	2.0	2.7	0.2	51.62

		426	0.3	1.4	2.0	2.6	0.0	53.95
		425	0.3	1.7	2.0	2.9	0.1	56.74
	Min	Cent	-1.2	0.2	-1.1	0.4	-1.6	-81.31
		417	-0.9	0.1	-1.1	0.4	-1.3	-80.24
		418	-0.9	0.3	-1.1	0.3	-1.5	-79.76
		426	-1.5	0.3	-1.1	0.3	-1.9	-82.51
		425	-1.5	0.1	-1.1	0.4	-1.8	-82.78

		NODE	Mxx	Myy	Mxy	Mmax	Mmin	ANGLE
	Max	Cent	4.4	2.8	1.2	4.8	1.0	19.67
		417	5.6	3.1	1.2	5.9	2.4	14.84
		418	2.9	2.9	1.1	3.4	0.6	26.02
		426	3.2	2.5	1.2	3.8	0.8	27.36
		425	6.0	2.6	1.3	6.4	2.2	16.14
	Min	Cent	-2.9	-0.8	-1.0	0.4	-3.2	-10.48
		417	-1.4	-1.3	-1.2	1.0	-2.0	-63.16
		418	-4.4	-1.3	-1.0	-0.9	-4.6	-41.64
		426	-4.4	-0.5	-0.8	-0.5	-4.5	-76.50
		425	-1.3	-0.2	-1.0	0.9	-1.8	-66.10

		NODE	Vxx	Vyy
	Max	Cent	7.9	0.9
		417	7.6	1.1
		418	7.6	0.8
		426	8.1	0.8
		425	8.1	1.1
	Min	Cent	4.8	-1.7
		417	4.7	-2.0
		418	4.7	-1.5
		426	4.7	-1.5
		425	4.7	-2.0

LC		NODE	Fxx	Fyy	Fxy	Fmax	Fmin	ANGLE
RC ENV~2	Max	Cent	0.2	1.1	0.8	1.4	0.0	67.67
		417	0.2	1.2	0.8	1.5	0.1	66.77
		418	0.2	1.1	0.8	1.4	0.1	64.59
		426	0.1	1.1	0.8	1.3	-0.0	68.52
		425	0.1	1.2	0.8	1.5	-0.0	70.21
	Min	Cent	-0.9	0.7	0.3	0.9	-1.1	70.85
		417	-0.7	0.8	0.3	1.0	-0.9	70.29
		418	-0.7	0.6	0.3	0.8	-0.9	67.90
		426	-1.1	0.6	0.3	0.8	-1.3	71.28
		425	-1.1	0.8	0.3	1.0	-1.3	73.06

		NODE	Mxx	Myy	Mxy	Mmax	Mmin	ANGLE
	Max	Cent	2.1	1.0	0.1	2.1	0.9	-4.83
		417	3.4	1.0	0.0	3.4	1.0	-5.58
		418	0.4	0.9	0.1	0.9	0.4	89.45
		426	0.6	1.0	0.3	1.0	0.5	79.72
		425	3.9	1.2	0.2	3.9	1.2	-2.19
	Min	Cent	-0.7	-0.0	-0.6	0.6	-0.8	-50.96
		417	0.8	-0.4	-0.7	1.2	-0.5	-36.36
		418	-2.3	-0.3	-0.6	0.0	-2.4	-65.29
		426	-2.2	0.3	-0.4	0.4	-2.2	-76.72
		425	0.9	0.4	-0.5	1.2	0.2	-50.98

		NODE	Vxx	Vyy
	Max	Cent	5.9	-0.1
		417	5.7	-0.1
		418	5.7	-0.0
		426	6.1	-0.0
		425	6.1	-0.1
	Min	Cent	5.2	-1.1
		417	5.1	-1.2
		418	5.1	-1.0
		426	5.3	-1.0
		425	5.3	-1.2

ELEM	MAT	SEC	LC		NODE	Fxx	Fyy	Fxy	Fmax	Fmin	ANGLE
376	1	1	SX (RS)		Cent	0.6	0.3	0.7	1.2	-0.3	39.27
					418	0.5	0.4	0.7	1.2	-0.3	41.57

		419	0.5	0.3	0.7	1.1	-0.3	39.34
		427	0.7	0.3	0.7	1.2	-0.3	36.15
		426	0.7	0.4	0.7	1.3	-0.2	38.27

	NODE	Mxx	Myy	Mxy	Mmax	Mmin	ANGLE
	Cent	3.5	0.4	0.8	3.7	0.2	13.88
	418	3.7	0.3	0.9	3.9	0.1	13.87
	419	3.3	0.4	0.7	3.4	0.2	13.88
	427	3.3	0.5	0.8	3.5	0.3	14.23
	426	3.8	0.4	0.9	4.0	0.2	13.98

	NODE	Vxx	Vyy
	Cent	0.9	0.5
	418	0.8	0.5
	419	0.8	0.6
	427	1.0	0.6
	426	1.0	0.5

LC		NODE	Fxx	Fyy	Fxy	Fmax	Fmin	ANGLE
SY (RS)		Cent	0.2	0.3	1.6	1.9	-1.3	45.39
		418	0.3	0.4	1.6	2.0	-1.3	46.19
		419	0.3	0.2	1.6	1.9	-1.4	44.19
		427	0.3	0.2	1.6	1.9	-1.4	44.19
		426	0.3	0.4	1.6	2.0	-1.3	46.20

	NODE	Mxx	Myy	Mxy	Mmax	Mmin	ANGLE
	Cent	0.5	1.8	0.4	1.9	0.4	72.73
	418	0.5	2.1	0.4	2.2	0.4	75.81
	419	0.5	2.0	0.5	2.1	0.4	73.84
	427	0.6	1.6	0.4	1.8	0.4	68.71
	426	0.5	1.5	0.4	1.7	0.3	70.79

	NODE	Vxx	Vyy
	Cent	0.2	0.9
	418	0.1	1.1
	419	0.1	0.8
	427	0.3	0.8
	426	0.3	1.1

LC		NODE	Fxx	Fyy	Fxy	Fmax	Fmin	ANGLE
RC ENV~1	Max	Cent	0.4	1.3	2.1	2.6	0.2	51.25
		418	0.5	1.4	2.1	2.7	0.3	51.45
		419	0.5	1.2	2.1	2.6	0.2	49.21
		427	0.3	1.2	2.1	2.5	0.1	50.75
		426	0.3	1.4	2.1	2.7	0.1	52.94
	Min	Cent	-1.3	0.3	-1.2	0.4	-1.7	-78.12
		418	-1.0	0.3	-1.2	0.4	-1.5	-76.27
		419	-1.0	0.3	-1.2	0.4	-1.6	-76.34
		427	-1.6	0.3	-1.2	0.4	-1.9	-79.89
		426	-1.6	0.3	-1.2	0.3	-1.9	-79.86

	NODE	Mxx	Myy	Mxy	Mmax	Mmin	ANGLE
Max	Cent	1.4	2.6	1.0	2.7	0.3	81.68
	418	2.6	2.8	1.0	3.1	0.6	25.85
	419	0.1	2.7	0.9	2.8	-0.4	83.98
	427	0.2	2.5	1.1	2.6	-0.4	81.96
	426	2.9	2.5	1.2	3.5	0.8	28.46
Min	Cent	-5.6	-0.9	-0.8	-0.9	-5.7	-81.60
	418	-4.7	-1.3	-0.9	-1.1	-4.8	-53.88
	419	-6.5	-1.2	-0.9	-1.1	-6.6	-82.09
	427	-6.5	-0.7	-0.6	-0.7	-6.5	-86.86
	426	-4.7	-0.6	-0.7	-0.5	-4.8	-79.78

	NODE	Vxx	Vyy
Max	Cent	6.6	0.6
	418	6.3	0.8
	419	6.3	0.5
	427	6.8	0.5
	426	6.8	0.8

	Min	Cent	3.0	-1.3
		418	3.0	-1.5
		419	3.0	-1.2
		427	3.1	-1.2
		426	3.1	-1.5

LC		NODE	Fxx	Fyy	Fxy	Fmax	Fmin	ANGLE
RC ENV~2	Max	Cent	0.2	1.0	0.8	1.3	0.1	65.79
		418	0.3	1.1	0.8	1.4	0.1	64.50
		419	0.3	0.9	0.8	1.3	0.1	62.43
		427	0.2	0.9	0.8	1.2	-0.0	66.98
		426	0.2	1.1	0.8	1.3	0.0	68.57
	Min	Cent	-0.9	0.5	0.3	0.7	-1.2	69.85
		418	-0.7	0.6	0.3	0.8	-1.0	68.58
		419	-0.7	0.5	0.3	0.7	-1.0	67.63
		427	-1.1	0.5	0.3	0.7	-1.4	71.00
		426	-1.1	0.6	0.3	0.7	-1.3	71.72

	NODE	Mxx	Myy	Mxy	Mmax	Mmin	ANGLE
Max	Cent	-1.1	0.9	0.2	0.9	-1.1	87.30
	418	0.1	0.8	0.1	0.8	0.1	88.26
	419	-2.4	0.8	0.1	0.8	-2.4	88.91
	427	-2.4	0.9	0.3	0.9	-2.4	85.23
	426	0.3	1.0	0.3	1.0	0.2	79.55
Min	Cent	-3.6	-0.0	-0.5	-0.0	-3.7	-85.10
	418	-2.6	-0.4	-0.6	-0.2	-2.6	-57.33
	419	-4.7	-0.2	-0.5	-0.2	-4.8	-84.84
	427	-4.7	0.2	-0.4	0.3	-4.7	-86.82
	426	-2.5	0.2	-0.4	0.2	-2.5	-84.98

	NODE	Vxx	Vyy
Max	Cent	4.9	0.0
	418	4.7	-0.0
	419	4.7	0.0
	427	5.1	0.0
	426	5.1	-0.0
Min	Cent	3.7	-0.9
	418	3.7	-1.0
	419	3.7	-0.9
	427	3.7	-0.9
	426	3.7	-1.0

ELEM	MAT	SEC	LC		NODE	Fxx	Fyy	Fxy	Fmax	Fmin	ANGLE
377	1	1	SX	(RS)	Cent	0.7	0.2	0.7	1.2	-0.3	36.65
					419	0.6	0.3	0.7	1.2	-0.3	39.06
					420	0.6	0.2	0.7	1.2	-0.4	37.64
					428	0.8	0.2	0.7	1.3	-0.3	33.69
					427	0.8	0.3	0.7	1.3	-0.3	35.00

	NODE	Mxx	Myy	Mxy	Mmax	Mmin	ANGLE
	Cent	2.8	0.4	0.6	2.9	0.3	13.69
	419	3.1	0.4	0.6	3.3	0.2	12.24
	420	2.4	0.5	0.5	2.5	0.3	14.52
	428	2.5	0.5	0.6	2.6	0.3	15.84
	427	3.2	0.4	0.7	3.4	0.3	13.35

	NODE	Vxx	Vyy
	Cent	1.5	0.6
	419	1.5	0.6
	420	1.5	0.6
	428	1.6	0.6
	427	1.6	0.6

LC		NODE	Fxx	Fyy	Fxy	Fmax	Fmin	ANGLE
SY	(RS)	Cent	0.3	0.2	1.5	1.7	-1.2	43.71
		419	0.3	0.2	1.5	1.7	-1.2	43.84
		420	0.3	0.3	1.5	1.7	-1.2	44.34
		428	0.4	0.3	1.5	1.8	-1.1	43.38
		427	0.4	0.2	1.5	1.8	-1.1	42.88

	NODE	Mxx	Myy	Mxy	Mmax	Mmin	ANGLE
	Cent	0.6	1.8	0.5	2.0	0.4	70.93
	419	0.6	2.0	0.5	2.1	0.4	72.38
	420	0.6	2.0	0.5	2.1	0.4	72.62
	428	0.6	1.6	0.4	1.8	0.5	69.16
	427	0.6	1.6	0.5	1.8	0.4	68.66

	NODE	Vxx	Vyy
	Cent	0.1	0.7
	419	0.1	0.8
	420	0.1	0.7
	428	0.1	0.7
	427	0.1	0.8

LC		NODE	Fxx	Fyy	Fxy	Fmax	Fmin	ANGLE
RC ENV~1	Max	Cent	0.5	1.2	1.8	2.3	0.3	50.38
		419	0.6	1.2	1.8	2.3	0.4	49.42
		420	0.6	1.2	1.8	2.3	0.3	49.69
		428	0.4	1.2	1.8	2.3	0.2	51.18
		427	0.4	1.2	1.8	2.2	0.2	50.91
	Min	Cent	-1.4	0.3	-1.1	0.4	-1.7	-74.68
		419	-1.1	0.3	-1.1	0.4	-1.4	-71.49
		420	-1.1	0.3	-1.1	0.5	-1.3	-72.32
		428	-1.8	0.3	-1.1	0.4	-2.0	-77.30
		427	-1.8	0.3	-1.1	0.4	-2.0	-76.84

	NODE	Mxx	Myy	Mxy	Mmax	Mmin	ANGLE
Max	Cent	-1.1	2.5	0.8	2.6	-1.4	83.59
	419	-0.2	2.7	0.8	2.8	-0.6	83.10
	420	-2.1	2.6	0.7	2.6	-2.3	84.27
	428	-2.1	2.3	0.8	2.4	-2.3	84.05
	427	-0.1	2.5	0.9	2.5	-0.6	82.76
Min	Cent	-7.2	-1.1	-0.8	-1.0	-7.2	-85.48
	419	-6.6	-1.2	-0.7	-1.2	-6.7	-83.52
	420	-7.8	-1.4	-0.8	-1.3	-7.8	-85.31
	428	-7.8	-1.0	-0.8	-0.9	-7.9	-86.69
	427	-6.6	-0.7	-0.8	-0.7	-6.6	-85.59

	NODE	Vxx	Vyy
Max	Cent	3.8	0.5
	419	3.7	0.5
	420	3.7	0.5
	428	4.0	0.5
	427	4.0	0.5
Min	Cent	0.5	-1.1
	419	0.5	-1.2
	420	0.5	-1.0
	428	0.5	-1.0
	427	0.5	-1.2

LC		NODE	Fxx	Fyy	Fxy	Fmax	Fmin	ANGLE
RC ENV~2	Max	Cent	0.3	0.9	0.6	1.1	0.1	67.83
		419	0.4	0.9	0.6	1.2	0.2	64.89
		420	0.4	0.9	0.6	1.1	0.2	64.19
		428	0.2	0.9	0.6	1.1	0.0	74.08
		427	0.2	0.9	0.6	1.1	0.1	70.73
	Min	Cent	-1.0	0.5	0.3	0.6	-1.2	72.70
		419	-0.7	0.5	0.3	0.6	-0.9	71.04
		420	-0.7	0.5	0.3	0.7	-0.9	67.13
		428	-1.2	0.5	0.3	0.6	-1.4	72.15
		427	-1.2	0.5	0.3	0.6	-1.4	74.92

	NODE	Mxx	Myy	Mxy	Mmax	Mmin	ANGLE
Max	Cent	-3.4	0.7	0.2	0.7	-3.4	88.14
	419	-2.7	0.8	0.2	0.8	-2.7	88.04
	420	-4.2	0.6	0.2	0.6	-4.2	88.43
	428	-4.3	0.7	0.2	0.7	-4.3	87.21
	427	-2.6	0.9	0.3	0.9	-2.6	86.35
Min	Cent	-5.3	-0.1	-0.5	-0.1	-5.3	-87.63

419	-4.8	-0.2	-0.4	-0.2	-4.9	-86.69
420	-5.8	-0.3	-0.5	-0.3	-5.8	-87.15
428	-5.8	-0.1	-0.5	-0.1	-5.8	-85.26
427	-4.8	0.2	-0.5	0.2	-4.8	-88.11

	NODE	Vxx	Vyy
Max	Cent	2.8	0.1
	419	2.7	0.0
	420	2.7	0.1
	428	2.9	0.1
	427	2.9	0.0
Min	Cent	1.6	-0.8
	419	1.6	-0.9
	420	1.6	-0.7
	428	1.6	-0.7
	427	1.6	-0.9

ELEM	MAT	SEC	LC		NODE	Fxx	Fyy	Fxy	Fmax	Fmin	ANGLE
378	1	1	SX (RS)		Cent	0.6	0.2	0.7	1.2	-0.3	38.34
					420	0.5	0.2	0.7	1.1	-0.4	39.51
					421	0.5	0.3	0.7	1.1	-0.4	41.07
					429	0.7	0.3	0.7	1.3	-0.3	36.40
					428	0.7	0.2	0.7	1.2	-0.3	34.96

	NODE	Mxx	Myy	Mxy	Mmax	Mmin	ANGLE
	Cent	1.9	0.4	0.4	2.1	0.3	15.44
	420	2.3	0.4	0.4	2.4	0.3	12.84
	421	1.5	0.6	0.4	1.6	0.5	18.18
	429	1.7	0.5	0.5	1.9	0.3	17.99
	428	2.3	0.5	0.5	2.5	0.3	14.82

	NODE	Vxx	Vyy
	Cent	1.7	0.6
	420	1.6	0.6
	421	1.6	0.7
	429	1.7	0.7
	428	1.7	0.6

LC		NODE	Fxx	Fyy	Fxy	Fmax	Fmin	ANGLE
SY (RS)		Cent	0.4	0.3	1.4	1.8	-1.1	44.52
		420	0.4	0.3	1.4	1.8	-1.1	43.23
		421	0.4	0.4	1.4	1.8	-1.0	44.66
		429	0.5	0.4	1.4	1.9	-1.0	44.46
		428	0.5	0.3	1.4	1.8	-1.1	43.03

	NODE	Mxx	Myy	Mxy	Mmax	Mmin	ANGLE
	Cent	0.6	1.8	0.4	1.9	0.5	74.21
	420	0.6	2.0	0.4	2.1	0.5	73.23
	421	0.6	2.1	0.4	2.2	0.5	77.03
	429	0.6	1.6	0.3	1.7	0.5	74.22
	428	0.6	1.6	0.4	1.8	0.5	70.93

	NODE	Vxx	Vyy
	Cent	0.2	0.8
	420	0.2	0.7
	421	0.2	1.0
	429	0.2	1.0
	428	0.2	0.7

LC		NODE	Fxx	Fyy	Fxy	Fmax	Fmin	ANGLE
RC ENV~1	Max	Cent	0.4	1.3	1.6	2.2	0.3	51.98
		420	0.5	1.2	1.6	2.2	0.4	49.62
		421	0.5	1.4	1.6	2.3	0.4	51.28
		429	0.3	1.4	1.6	2.2	0.2	53.19
		428	0.3	1.2	1.6	2.1	0.2	51.58
	Min	Cent	-1.4	0.2	-1.2	0.5	-1.5	-70.05
		420	-1.1	0.3	-1.2	0.6	-1.4	-67.24
		421	-1.1	0.2	-1.2	0.5	-1.5	-66.85

		429	-1.7	0.2	-1.2	0.5	-1.8	-72.74
		428	-1.7	0.3	-1.2	0.5	-1.8	-72.97

	NODE	Mxx	Myy	Mxy	Mmax	Mmin	ANGLE
Max	Cent	-2.5	2.3	0.6	2.3	-2.6	84.93
	420	-2.1	2.6	0.7	2.7	-2.3	83.77
	421	-2.9	2.3	0.6	2.4	-3.0	84.46
	429	-2.8	1.9	0.5	1.9	-2.9	86.10
	428	-2.1	2.3	0.6	2.4	-2.2	85.41
Min	Cent	-7.3	-1.4	-0.8	-1.4	-7.4	-86.80
	420	-7.5	-1.3	-0.6	-1.3	-7.5	-87.20
	421	-7.1	-1.9	-0.7	-1.9	-7.2	-87.80
	429	-7.2	-1.4	-1.0	-1.4	-7.4	-86.29
	428	-7.6	-0.9	-1.0	-0.9	-7.7	-85.85

	NODE	Vxx	Vyy
Max	Cent	1.6	0.7
	420	1.5	0.5
	421	1.5	0.9
	429	1.7	0.9
	428	1.7	0.5
Min	Cent	-1.7	-1.0
	420	-1.7	-1.0
	421	-1.7	-1.1
	429	-1.7	-1.1
	428	-1.7	-1.0

LC		NODE	Fxx	Fyy	Fxy	Fmax	Fmin	ANGLE
RC ENV~2	Max	Cent	0.2	0.9	0.4	1.0	0.1	78.91
		420	0.3	0.9	0.4	1.0	0.2	76.94
		421	0.3	1.0	0.4	1.1	0.2	77.90
		429	0.1	1.0	0.4	1.1	0.1	80.38
		428	0.1	0.9	0.4	0.9	0.1	79.77
	Min	Cent	-1.0	0.5	0.2	0.6	-1.1	72.56
		420	-0.8	0.5	0.2	0.6	-0.9	69.17
		421	-0.8	0.5	0.2	0.6	-0.8	69.85
		429	-1.2	0.5	0.2	0.6	-1.3	75.10
		428	-1.2	0.5	0.2	0.6	-1.3	74.70

	NODE	Mxx	Myy	Mxy	Mmax	Mmin	ANGLE
Max	Cent	-4.3	0.5	0.2	0.5	-4.3	87.59
	420	-4.1	0.6	0.3	0.7	-4.2	87.44
	421	-4.4	0.2	0.3	0.2	-4.4	86.69
	429	-4.5	0.3	0.1	0.3	-4.5	88.64
	428	-4.2	0.7	0.1	0.7	-4.2	88.44
Min	Cent	-5.4	-0.4	-0.5	-0.4	-5.5	-85.29
	420	-5.5	-0.3	-0.4	-0.3	-5.6	-88.09
	421	-5.3	-0.9	-0.4	-0.8	-5.3	-84.99
	429	-5.4	-0.7	-0.6	-0.6	-5.5	-82.30
	428	-5.6	-0.1	-0.6	0.0	-5.7	-83.68

	NODE	Vxx	Vyy
Max	Cent	0.5	0.1
	420	0.4	0.1
	421	0.4	0.2
	429	0.6	0.2
	428	0.6	0.1
Min	Cent	-0.8	-0.7
	420	-0.8	-0.7
	421	-0.8	-0.6
	429	-0.8	-0.6
	428	-0.8	-0.7

ELEM	MAT	SEC	LC		NODE	Fxx	Fyy	Fxy	Fmax	Fmin	ANGLE
379	1	1	SX (RS)		Cent	0.4	0.3	0.7	1.1	-0.4	42.24
					421	0.4	0.3	0.7	1.1	-0.4	42.92
					422	0.4	0.3	0.7	1.1	-0.4	43.87
					430	0.5	0.3	0.7	1.2	-0.3	41.05
					429	0.5	0.3	0.7	1.2	-0.4	40.13

	NODE	Mxx	Myy	Mxy	Mmax	Mmin	ANGLE

	Cent	1.4	0.5	0.3	1.5	0.4	18.09
	421	1.4	0.5	0.3	1.5	0.5	16.47
	422	1.0	0.6	0.3	1.2	0.5	30.89
	430	1.5	0.5	0.4	1.6	0.4	17.73
	429	1.7	0.5	0.4	1.8	0.4	15.10

	NODE	Vxx	Vyy
	Cent	1.4	0.6
	421	1.4	0.7
	422	1.4	0.5
	430	1.4	0.5
	429	1.4	0.7

LC		NODE	Fxx	Fyy	Fxy	Fmax	Fmin	ANGLE
SY (RS)		Cent	0.4	0.5	1.5	1.9	-1.0	45.27
		421	0.5	0.4	1.5	2.0	-1.0	44.10
		422	0.5	0.5	1.5	2.0	-1.0	44.91
		430	0.4	0.5	1.5	2.0	-1.0	45.80
		429	0.4	0.4	1.5	1.9	-1.1	44.99

	NODE	Mxx	Myy	Mxy	Mmax	Mmin	ANGLE
	Cent	0.6	1.9	0.2	1.9	0.6	80.52
	421	0.7	2.1	0.3	2.1	0.6	79.58
	422	0.6	2.3	0.2	2.4	0.6	82.70
	430	0.5	1.5	0.2	1.6	0.5	77.75
	429	0.6	1.6	0.2	1.7	0.5	77.69

	NODE	Vxx	Vyy
	Cent	0.3	1.3
	421	0.2	1.0
	422	0.2	1.6
	430	0.5	1.6
	429	0.5	1.0

LC		NODE	Fxx	Fyy	Fxy	Fmax	Fmin	ANGLE
RC ENV~1	Max	Cent	0.2	1.5	1.6	2.3	0.2	53.90
		421	0.3	1.4	1.6	2.3	0.3	51.52
		422	0.3	1.7	1.6	2.4	0.3	53.23
		430	0.1	1.7	1.6	2.3	0.1	55.65
		429	0.1	1.4	1.6	2.2	0.1	54.03
	Min	Cent	-1.4	0.2	-1.4	0.6	-1.8	-65.71
		421	-1.2	0.2	-1.4	0.6	-1.8	-63.02
		422	-1.2	0.2	-1.4	0.7	-1.7	-64.01
		430	-1.7	0.2	-1.4	0.6	-1.8	-68.30
		429	-1.7	0.2	-1.4	0.6	-1.8	-67.55

	NODE	Mxx	Myy	Mxy	Mmax	Mmin	ANGLE
Max	Cent	-2.3	1.8	0.4	1.9	-2.4	86.20
	421	-2.6	2.4	0.6	2.4	-2.7	84.38
	422	-2.2	1.9	0.6	2.0	-2.3	83.96
	430	-1.9	1.1	0.3	1.1	-1.9	88.08
	429	-2.4	1.9	0.3	2.0	-2.4	88.06
Min	Cent	-5.5	-1.9	-0.9	-1.9	-5.7	-87.02
	421	-6.3	-1.8	-0.6	-1.8	-6.3	89.29
	422	-4.8	-2.8	-0.6	-2.8	-4.8	88.12
	430	-4.9	-2.5	-1.3	-1.9	-5.3	-69.59
	429	-6.4	-1.3	-1.3	-1.3	-6.6	-85.22

	NODE	Vxx	Vyy
Max	Cent	-0.3	1.3
	421	-0.4	0.9
	422	-0.4	1.6
	430	-0.3	1.6
	429	-0.3	0.9
Min	Cent	-4.0	-1.4
	421	-3.9	-1.1
	422	-3.9	-1.7
	430	-4.1	-1.7
	429	-4.1	-1.1

LC		NODE	Fxx	Fyy	Fxy	Fmax	Fmin	ANGLE
RC ENV~2	Max	Cent	0.1	1.1	0.2	1.1	0.1	85.76
		421	0.2	1.0	0.2	1.0	0.2	85.03
		422	0.2	1.2	0.2	1.2	0.2	85.56
		430	0.0	1.2	0.2	1.2	0.0	86.30
		429	0.0	1.0	0.2	1.0	0.0	85.94
	Min	Cent	-1.0	0.5	0.1	0.6	-1.0	79.40
		421	-0.8	0.5	0.1	0.5	-0.8	75.82
		422	-0.8	0.6	0.1	0.6	-0.8	78.73
		430	-1.2	0.6	0.1	0.6	-1.2	81.58
		429	-1.2	0.5	0.1	0.5	-1.2	80.00

		NODE	Mxx	Myy	Mxy	Mmax	Mmin	ANGLE
	Max	Cent	-3.6	-0.0	0.1	-0.0	-3.6	87.95
		421	-4.0	0.3	0.3	0.3	-4.0	85.65
		422	-3.1	-0.4	0.3	-0.4	-3.2	84.32
		430	-3.2	-0.4	-0.1	-0.4	-3.3	-88.57
		429	-4.1	0.3	-0.0	0.3	-4.1	-89.72
	Min	Cent	-4.2	-1.1	-0.6	-1.0	-4.2	-79.70
		421	-4.7	-0.7	-0.3	-0.7	-4.7	-86.40
		422	-3.6	-1.8	-0.4	-1.8	-3.6	-78.65
		430	-3.7	-1.6	-0.9	-1.3	-3.9	-73.03
		429	-4.8	-0.6	-0.8	-0.4	-4.9	-79.57

		NODE	Vxx	Vyy
	Max	Cent	-1.5	0.2
		421	-1.5	0.2
		422	-1.5	0.2
		430	-1.4	0.2
		429	-1.4	0.2
	Min	Cent	-2.9	-0.7
		421	-2.8	-0.6
		422	-2.8	-0.7
		430	-3.0	-0.7
		429	-3.0	-0.6

ELEM	MAT	SEC	LC		NODE	Fxx	Fyy	Fxy	Fmax	Fmin	ANGLE
380	1	1	SX (RS)		Cent	0.3	0.3	0.8	1.1	-0.5	45.62
					422	0.2	0.3	0.8	1.0	-0.5	47.21
					423	0.2	0.3	0.8	1.0	-0.5	46.13
					431	0.4	0.3	0.8	1.1	-0.5	43.51
					430	0.4	0.3	0.8	1.1	-0.4	44.60

		NODE	Mxx	Myy	Mxy	Mmax	Mmin	ANGLE
		Cent	1.0	0.4	0.5	1.4	0.1	29.98
		422	0.9	0.6	0.4	1.3	0.3	35.66
		423	0.7	0.5	0.6	1.2	-0.1	40.02
		431	1.2	0.3	0.6	1.5	-0.0	27.64
		430	1.5	0.5	0.5	1.7	0.3	20.46

		NODE	Vxx	Vyy
		Cent	0.9	0.5
		422	0.8	0.5
		423	0.8	0.4
		431	0.9	0.4
		430	0.9	0.5

LC		NODE	Fxx	Fyy	Fxy	Fmax	Fmin	ANGLE
SY (RS)		Cent	0.5	0.5	1.3	1.8	-0.8	45.55
		422	0.6	0.5	1.3	1.8	-0.7	44.22
		423	0.6	0.5	1.3	1.8	-0.7	44.47
		431	0.4	0.5	1.3	1.7	-0.8	46.81
		430	0.4	0.5	1.3	1.7	-0.8	46.55

		NODE	Mxx	Myy	Mxy	Mmax	Mmin	ANGLE
		Cent	0.7	2.0	0.3	2.0	0.6	78.06
		422	0.7	2.3	0.3	2.4	0.7	81.10

		423	0.7	2.7	0.2	2.7	0.6	83.02
		431	0.8	1.4	0.3	1.5	0.7	67.07
		430	0.6	1.5	0.3	1.6	0.5	74.13

	NODE	Vxx	Vyy
	Cent	0.4	2.0
	422	0.2	1.6
	423	0.2	2.3
	431	0.9	2.3
	430	0.9	1.6

LC		NODE	Fxx	Fyy	Fxy	Fmax	Fmin	ANGLE
RC ENV~1	Max	Cent	0.1	1.8	1.3	2.1	0.0	57.61
		422	0.3	1.7	1.3	2.1	0.1	55.09
		423	0.3	2.0	1.3	2.2	0.1	56.61
		431	-0.1	2.0	1.3	2.1	-0.1	59.89
		430	-0.1	1.7	1.3	2.0	-0.1	58.53
	Min	Cent	-1.5	0.2	-1.3	0.8	-1.7	87.14
		422	-1.3	0.2	-1.3	0.7	-1.7	86.35
		423	-1.3	0.3	-1.3	0.9	-1.7	87.22
		431	-1.7	0.3	-1.3	0.9	-1.7	87.65
		430	-1.7	0.2	-1.3	0.7	-1.7	87.06

	NODE	Mxx	Myy	Mxy	Mmax	Mmin	ANGLE
Max	Cent	-1.1	1.2	0.5	1.3	-1.3	84.26
	422	-1.6	2.0	0.7	2.1	-1.8	83.00
	423	-0.9	1.5	0.8	1.6	-0.9	80.57
	431	-0.5	0.2	0.4	0.2	-0.9	87.61
	430	-1.2	1.2	0.3	1.2	-1.2	88.10
Min	Cent	-3.2	-3.1	-1.0	-2.4	-3.8	-48.03
	422	-3.7	-2.6	-0.6	-2.6	-3.8	-87.10
	423	-2.3	-4.2	-0.6	-2.2	-4.3	-14.53
	431	-2.8	-3.8	-1.4	-2.0	-4.4	-42.98
	430	-4.2	-2.2	-1.4	-1.7	-4.3	-72.53

	NODE	Vxx	Vyy
Max	Cent	-1.3	1.9
	422	-1.3	1.6
	423	-1.3	2.3
	431	-1.2	2.3
	430	-1.2	1.6
Min	Cent	-4.4	-2.0
	422	-4.2	-1.7
	423	-4.2	-2.4
	431	-4.6	-2.4
	430	-4.6	-1.7

LC		NODE	Fxx	Fyy	Fxy	Fmax	Fmin	ANGLE
RC ENV~2	Max	Cent	-0.0	1.3	0.0	1.3	-0.0	89.81
		422	0.0	1.2	0.0	1.2	0.0	89.78
		423	0.0	1.4	0.0	1.4	0.0	89.80
		431	-0.1	1.4	0.0	1.4	-0.1	89.83
		430	-0.1	1.2	0.0	1.2	-0.1	89.81
	Min	Cent	-1.0	0.6	-0.0	0.6	-1.0	87.54
		422	-0.9	0.6	-0.0	0.6	-0.9	86.94
		423	-0.9	0.7	-0.0	0.7	-0.9	87.59
		431	-1.2	0.7	-0.0	0.7	-1.2	87.94
		430	-1.2	0.6	-0.0	0.6	-1.2	87.49

	NODE	Mxx	Myy	Mxy	Mmax	Mmin	ANGLE
Max	Cent	-1.5	-0.7	0.0	-0.7	-2.0	89.93
	422	-2.3	-0.3	0.2	-0.3	-2.3	83.87
	423	-0.8	-1.2	0.2	-0.8	-1.5	-9.11
	431	-0.7	-1.2	-0.2	-0.3	-1.7	-22.82
	430	-2.3	-0.3	-0.2	-0.3	-2.6	-85.93
Min	Cent	-2.3	-2.1	-0.6	-1.5	-2.6	-68.31
	422	-2.8	-1.7	-0.3	-1.5	-2.8	-73.50
	423	-1.7	-2.9	-0.3	-1.7	-3.0	-13.14
	431	-1.9	-2.6	-0.9	-1.4	-3.1	-36.36
	430	-2.9	-1.5	-0.9	-1.0	-3.2	-71.09

	NODE	Vxx	Vyy
Max	Cent	-2.1	0.3
	422	-2.1	0.2
	423	-2.1	0.3
	431	-2.1	0.3
	430	-2.1	0.2
Min	Cent	-3.2	-0.8
	422	-3.1	-0.7
	423	-3.1	-0.8
	431	-3.3	-0.8
	430	-3.3	-0.7

ELEM	MAT	SEC	LC	NODE	Fxx	Fyy	Fxy	Fmax	Fmin	ANGLE
381	1	1	SX (RS)	Cent	0.1	0.1	0.8	0.9	-0.7	45.23
				423	0.1	0.3	0.8	1.0	-0.6	47.57
				424	0.1	0.0	0.8	0.9	-0.7	43.27
				432	0.1	0.0	0.8	0.9	-0.7	43.48
				431	0.1	0.3	0.8	1.0	-0.6	47.78

NODE	Mxx	Myy	Mxy	Mmax	Mmin	ANGLE
Cent	0.4	0.2	0.8	1.1	-0.6	41.65
423	0.5	0.5	0.8	1.2	-0.3	44.81
424	0.1	0.0	0.8	0.9	-0.7	42.87
432	0.1	0.0	0.9	1.0	-0.8	43.34
431	1.0	0.3	0.9	1.6	-0.3	33.71

NODE	Vxx	Vyy
Cent	1.4	0.2
423	0.8	0.4
424	0.8	0.0
432	2.1	0.0
431	2.1	0.4

LC	NODE	Fxx	Fyy	Fxy	Fmax	Fmin	ANGLE
SY (RS)	Cent	0.5	0.5	0.5	1.1	-0.0	46.14
	423	0.7	0.5	0.5	1.1	0.1	41.83
	424	0.7	0.5	0.5	1.1	0.1	41.80
	432	0.4	0.5	0.5	1.0	-0.1	48.73
	431	0.4	0.5	0.5	1.0	-0.1	48.76

NODE	Mxx	Myy	Mxy	Mmax	Mmin	ANGLE
Cent	0.8	2.0	0.2	2.1	0.8	82.82
423	0.7	2.6	0.2	2.7	0.7	84.18
424	0.7	2.8	0.1	2.8	0.7	87.81
432	1.1	1.4	0.1	1.4	1.0	71.71
431	0.8	1.4	0.2	1.5	0.7	72.02

NODE	Vxx	Vyy
Cent	0.2	2.5
423	0.2	2.3
424	0.2	2.7
432	0.5	2.7
431	0.5	2.3

LC		NODE	Fxx	Fyy	Fxy	Fmax	Fmin	ANGLE
RC ENV~1	Max	Cent	0.0	2.0	0.8	2.0	-0.1	-89.00
		423	0.3	2.0	0.8	2.0	0.1	-88.94
		424	0.3	2.0	0.8	2.0	0.1	-88.96
		432	-0.1	2.0	0.8	2.0	-0.2	-89.06
		431	-0.1	2.0	0.8	2.0	-0.2	-89.04
	Min	Cent	-1.5	0.3	-0.8	0.5	-1.5	-70.01
		423	-1.4	0.3	-0.8	0.5	-1.4	-70.73
		424	-1.4	0.3	-0.8	0.5	-1.4	-71.40
		432	-1.7	0.3	-0.8	0.5	-1.7	-69.96
		431	-1.7	0.3	-0.8	0.5	-1.7	-69.20

NODE	Mxx	Myy	Mxy	Mmax	Mmin	ANGLE

Max	Cent	0.7	0.8	0.7	0.8	-0.1	89.66
	423	0.0	1.6	0.7	1.6	-0.3	84.56
	424	0.9	1.3	0.7	1.3	0.1	-89.67
	432	1.4	-0.2	0.6	1.5	-0.2	-8.11
	431	0.4	0.4	0.6	0.7	-0.3	-14.96
Min	Cent	-1.6	-4.1	-1.0	-1.6	-4.3	-10.33
	423	-1.7	-4.0	-0.8	-1.7	-4.1	-6.17
	424	-1.2	-5.0	-0.9	-1.2	-5.0	-3.17
	432	-1.8	-4.5	-1.2	-1.6	-4.7	-18.27
	431	-2.2	-3.6	-1.1	-1.7	-4.0	-29.80

	NODE	Vxx	Vyy
Max	Cent	0.5	2.5
	423	-0.1	2.3
	424	-0.1	2.7
	432	1.1	2.7
	431	1.1	2.3
Min	Cent	-2.4	-2.5
	423	-1.9	-2.4
	424	-1.9	-2.7
	432	-3.0	-2.7
	431	-3.0	-2.4

LC		NODE	Fxx	Fyy	Fxy	Fmax	Fmin	ANGLE
RC ENV~2	Max	Cent	-0.2	1.5	0.0	1.5	-0.2	-89.07
		423	-0.1	1.4	0.0	1.4	-0.1	-89.01
		424	-0.1	1.5	0.0	1.5	-0.1	-89.04
		432	-0.2	1.5	0.0	1.5	-0.2	-89.13
		431	-0.2	1.4	0.0	1.4	-0.2	-89.11
	Min	Cent	-1.1	0.7	-0.1	0.7	-1.1	88.94
		423	-1.0	0.7	-0.1	0.7	-1.0	88.79
		424	-1.0	0.8	-0.1	0.8	-1.0	-89.78
		432	-1.2	0.8	-0.1	0.8	-1.2	-89.80
		431	-1.2	0.7	-0.1	0.7	-1.2	88.91

	NODE	Mxx	Myy	Mxy	Mmax	Mmin	ANGLE
Max	Cent	0.3	-1.3	-0.1	0.4	-1.3	-7.75
	423	-0.1	-1.1	0.0	-0.0	-1.1	-9.33
	424	0.5	-1.5	-0.1	0.5	-1.5	-3.40
	432	0.8	-1.5	-0.3	0.9	-1.6	-8.29
	431	0.1	-1.1	-0.2	0.3	-1.3	-15.47
Min	Cent	-0.9	-2.9	-0.6	-0.8	-3.0	-16.10
	423	-1.0	-2.8	-0.5	-1.0	-2.8	-9.02
	424	-0.6	-3.5	-0.5	-0.6	-3.5	-7.00
	432	-0.9	-3.2	-0.8	-0.6	-3.3	-20.56
	431	-1.2	-2.5	-0.8	-1.0	-2.7	-28.93

	NODE	Vxx	Vyy
Max	Cent	-0.8	0.4
	423	-0.8	0.3
	424	-0.8	0.4
	432	-0.7	0.4
	431	-0.7	0.3
Min	Cent	-1.5	-0.8
	423	-1.4	-0.8
	424	-1.4	-0.9
	432	-1.6	-0.9
	431	-1.6	-0.8

ELEM	MAT	SEC	LC		NODE	Fxx	Fyy	Fxy	Fmax	Fmin	ANGLE
382	1	1	SX (RS)		Cent	0.8	0.7	0.6	1.3	0.1	43.26
					148	0.4	0.9	0.6	1.3	-0.0	56.64
					425	0.4	0.6	0.6	1.1	-0.1	49.17
					433	1.2	0.6	0.6	1.5	0.2	31.33
					151	1.2	0.9	0.6	1.6	0.4	38.43

	NODE	Mxx	Myy	Mxy	Mmax	Mmin	ANGLE
	Cent	3.5	0.9	1.4	4.1	0.3	23.81
	148	2.4	1.1	1.6	3.4	0.1	33.23
	425	3.3	0.5	1.2	3.8	0.1	20.50
	433	4.0	0.7	1.3	4.5	0.2	18.60

```
                151        4.1        1.4        1.7        4.9        0.6      25.72

               NODE        Vxx        Vyy
           ---- ------ ---------- ----------
               Cent        1.1        0.2
                148        2.0        0.3
                425        2.0        0.3
                433        0.2        0.3
                151        0.2        0.3


      LC        NODE        Fxx        Fyy        Fxy       Fmax       Fmin      ANGLE
-------- ---- ------ ---------- ---------- ---------- ---------- ---------- ----------
      SY (RS)   Cent        0.4        1.3        1.3        2.2       -0.5      54.69
                148        0.1        1.5        1.3        2.2       -0.7      59.13
                425        0.1        1.1        1.3        2.0       -0.8      55.52
                433        0.7        1.1        1.3        2.2       -0.4      49.56
                151        0.7        1.5        1.3        2.4       -0.3      53.70

               NODE        Mxx        Myy        Mxy       Mmax       Mmin      ANGLE
           ---- ------ ---------- ---------- ---------- ---------- ---------- ----------
               Cent        0.4        1.1        0.2        1.1        0.4      77.09
                148        0.2        1.6        0.1        1.6        0.1      84.88
                425        0.2        1.6        0.2        1.6        0.2      80.29
                433        0.6        0.8        0.2        1.0        0.4      56.36
                151        0.9        0.7        0.1        1.0        0.7      25.42

               NODE        Vxx        Vyy
           ---- ------ ---------- ----------
               Cent        0.5        2.0
                148        0.5        2.1
                425        0.5        2.0
                433        0.6        2.0
                151        0.6        2.1


      LC        NODE        Fxx        Fyy        Fxy       Fmax       Fmin      ANGLE
-------- ---- ------ ---------- ---------- ---------- ---------- ---------- ----------
RC ENV~1  Max   Cent        0.3        2.1        1.7        3.0        0.2      61.32
                148        0.1        2.3        1.7        3.2        0.0      63.27
                425        0.1        1.8        1.7        2.8        0.0      60.44
                433        0.5        1.8        1.7        2.8        0.3      59.10
                151        0.5        2.3        1.7        3.2        0.3      62.09
           Min   Cent       -1.7       -0.5       -0.9        0.1       -2.2     -83.11
                148       -1.0       -0.6       -0.9        0.0       -1.6     -76.30
                425       -1.0       -0.3       -0.9        0.2       -1.6     -79.65
                433       -2.5       -0.3       -0.9        0.2       -2.9     -60.21
                151       -2.5       -0.6       -0.9       -0.0       -2.9     -56.27

               NODE        Mxx        Myy        Mxy       Mmax       Mmin      ANGLE
           ---- ------ ---------- ---------- ---------- ---------- ---------- ----------
           Max   Cent        9.0        3.0        1.4        9.2        2.9      -8.00
                148        9.4        3.1        1.3        9.6        3.1     -10.26
                425        5.9        2.5        1.4        6.3        2.2      16.22
                433        7.6        2.9        1.5        7.8        2.8      16.46
                151       13.7        4.3        1.5       14.0        4.1      -9.94
           Min   Cent        1.3        0.8       -1.4        2.5       -0.3     -42.18
                148        3.3       -0.1       -1.9        4.2       -0.5     -25.58
                425       -0.8       -0.6       -1.1        1.0       -1.5     -60.39
                433       -0.7        1.3       -1.1        1.9       -1.2     -67.65
                151        3.3        1.5       -2.0        4.5        0.3     -32.67

               NODE        Vxx        Vyy
           ---- ------ ---------- ----------
           Max   Cent        9.3        0.0
                148        8.6       -0.0
                425        8.6        0.0
                433       10.8        0.0
                151       10.8       -0.0
           Min   Cent        5.2       -5.1
                148        3.6       -5.1
                425        3.6       -5.1
                433        6.3       -5.1
                151        6.3       -5.1


      LC        NODE        Fxx        Fyy        Fxy       Fmax       Fmin      ANGLE
-------- ---- ------ ---------- ---------- ---------- ---------- ---------- ----------
RC ENV~2  Max   Cent        0.1        1.2        1.0        1.6        0.1      70.84
```

		148	-0.0	1.4	1.0	1.8	-0.0	68.69
		425	-0.0	1.1	1.0	1.5	-0.0	66.51
		433	0.1	1.1	1.0	1.4	0.1	72.65
		151	0.1	1.4	1.0	1.7	0.1	73.98
	Min	Cent	-1.2	0.7	0.0	0.7	-1.6	88.52
		148	-0.7	0.6	0.0	0.6	-1.1	88.52
		425	-0.7	0.7	0.0	0.8	-1.2	88.80
		433	-1.7	0.7	0.0	0.8	-2.1	88.52
		151	-1.7	0.6	0.0	0.6	-2.0	88.08

	NODE	Mxx	Myy	Mxy	Mmax	Mmin	ANGLE
Max	Cent	6.6	1.9	0.0	6.7	1.9	-7.23
	148	7.0	1.5	-0.2	7.2	1.5	-9.49
	425	4.0	1.0	0.2	4.0	1.0	-3.30
	433	5.5	2.1	0.2	5.5	2.1	-5.22
	151	10.1	3.3	-0.1	10.2	3.1	-9.21
Min	Cent	3.3	1.2	-0.8	3.3	1.1	-3.33
	148	4.8	0.5	-1.3	4.8	0.3	-4.12
	425	1.2	-0.2	-0.4	1.2	-0.3	-17.73
	433	1.6	1.8	-0.5	1.9	1.6	80.73
	151	5.6	2.4	-1.3	5.6	2.3	-2.33

	NODE	Vxx	Vyy
Max	Cent	7.0	-1.7
	148	6.5	-1.8
	425	6.5	-1.6
	433	8.1	-1.6
	151	8.1	-1.8
Min	Cent	6.2	-3.7
	148	5.1	-3.7
	425	5.1	-3.6
	433	6.9	-3.6
	151	6.9	-3.7

ELEM	MAT	SEC	LC		NODE	Fxx	Fyy	Fxy	Fmax	Fmin	ANGLE
383	1	1	SX	(RS)	Cent	0.8	0.5	0.6	1.3	-0.0	38.33
					425	0.7	0.6	0.6	1.3	-0.0	42.89
					426	0.7	0.4	0.6	1.2	-0.1	39.43
					434	0.9	0.4	0.6	1.3	-0.0	34.34
					433	0.9	0.6	0.6	1.4	0.1	37.53

	NODE	Mxx	Myy	Mxy	Mmax	Mmin	ANGLE
	Cent	4.0	0.6	1.0	4.3	0.3	15.05
	425	3.6	0.6	1.1	4.0	0.2	18.00
	426	3.8	0.4	1.0	4.0	0.1	14.94
	434	4.5	1.0	0.9	4.7	0.8	13.51
	433	4.3	0.7	1.0	4.6	0.4	14.90

	NODE	Vxx	Vyy
	Cent	0.4	0.8
	425	0.4	0.3
	426	0.4	1.2
	434	0.4	1.2
	433	0.4	0.3

LC		NODE	Fxx	Fyy	Fxy	Fmax	Fmin	ANGLE
SY	(RS)	Cent	0.2	0.8	1.8	2.3	-1.3	49.29
		425	0.2	1.1	1.8	2.5	-1.2	52.26
		426	0.2	0.4	1.8	2.1	-1.5	46.77
		434	0.3	0.4	1.8	2.2	-1.4	45.89
		433	0.3	1.1	1.8	2.6	-1.1	51.42

	NODE	Mxx	Myy	Mxy	Mmax	Mmin	ANGLE
	Cent	0.4	1.2	0.3	1.3	0.3	68.96
	425	0.2	1.6	0.3	1.6	0.2	76.87
	426	0.4	1.5	0.4	1.6	0.3	72.90
	434	0.7	0.9	0.4	1.2	0.4	52.79
	433	0.4	0.8	0.3	1.0	0.2	59.59

	NODE	Vxx	Vyy

	Cent	0.8	1.6	
	425	0.5	2.0	
	426	0.5	1.2	
	434	1.1	1.2	
	433	1.1	2.0	

LC		NODE	Fxx	Fyy	Fxy	Fmax	Fmin	ANGLE
RC ENV~1	Max	Cent	0.3	1.5	2.3	3.0	0.2	55.36
		425	0.3	1.9	2.3	3.3	0.2	57.31
		426	0.3	1.4	2.3	2.8	0.2	52.87
		434	0.4	1.4	2.3	2.8	0.2	53.05
		433	0.4	1.9	2.3	3.3	0.2	57.48
	Min	Cent	-1.7	-0.1	-1.3	0.3	-2.3	-83.80
		425	-1.5	-0.4	-1.3	0.2	-2.1	-82.68
		426	-1.5	0.2	-1.3	0.3	-2.2	-83.02
		434	-1.9	0.2	-1.3	0.3	-2.5	-84.58
		433	-1.9	-0.4	-1.3	0.2	-2.5	-84.37

		NODE	Mxx	Myy	Mxy	Mmax	Mmin	ANGLE
	Max	Cent	5.1	2.6	1.5	5.7	1.5	22.24
		425	5.9	2.5	1.4	6.3	1.9	16.23
		426	3.1	2.5	1.4	3.9	0.6	29.01
		434	4.1	2.9	1.6	5.2	1.8	34.56
		433	7.4	2.9	1.6	7.9	2.7	17.11
	Min	Cent	-2.9	0.3	-0.5	0.8	-3.0	19.21
		425	-1.3	-0.7	-0.8	0.7	-1.6	-67.96
		426	-4.4	-0.5	-0.5	-0.5	-4.4	81.63
		434	-4.9	0.9	-0.2	0.9	-4.9	-87.86
		433	-1.2	1.3	-0.5	1.5	-1.3	-79.63

		NODE	Vxx	Vyy
	Max	Cent	9.2	-0.3
		425	8.1	0.0
		426	8.1	-0.5
		434	10.3	-0.5
		433	10.3	0.0
	Min	Cent	4.9	-5.0
		425	4.7	-5.1
		426	4.7	-4.9
		434	5.1	-4.9
		433	5.1	-5.1

LC		NODE	Fxx	Fyy	Fxy	Fmax	Fmin	ANGLE
RC ENV~2	Max	Cent	0.1	1.1	1.0	1.4	0.1	68.46
		425	0.1	1.1	1.0	1.5	0.1	67.95
		426	0.1	1.0	1.0	1.4	0.1	66.78
		434	0.0	1.0	1.0	1.3	0.0	68.95
		433	0.0	1.1	1.0	1.5	0.0	69.95
	Min	Cent	-1.2	0.6	0.1	0.8	-1.6	83.71
		425	-1.1	0.7	0.1	0.8	-1.5	83.64
		426	-1.1	0.6	0.1	0.8	-1.5	75.98
		434	-1.4	0.6	0.1	0.8	-1.8	77.10
		433	-1.4	0.7	0.1	0.8	-1.7	84.01

		NODE	Mxx	Myy	Mxy	Mmax	Mmin	ANGLE
	Max	Cent	2.8	1.5	0.5	2.8	1.2	12.92
		425	3.8	0.9	0.3	3.8	0.9	0.47
		426	0.6	1.0	0.5	1.1	0.2	71.78
		434	1.3	2.2	0.7	2.6	0.9	61.05
		433	5.3	2.1	0.6	5.4	2.1	6.73
	Min	Cent	-0.5	0.9	-0.1	0.9	-0.6	85.29
		425	0.9	-0.3	-0.3	0.9	-0.3	-7.27
		426	-2.2	0.1	-0.1	0.2	-2.2	85.98
		434	-2.3	1.4	0.1	1.4	-2.3	87.64
		433	1.3	1.7	0.0	1.8	1.3	49.58

		NODE	Vxx	Vyy
	Max	Cent	6.9	-1.3
		425	6.1	-1.6
		426	6.1	-1.0

		434	7.7	-1.0
		433	7.7	-1.6
	Min	Cent	5.7	-3.6
		425	5.3	-3.6
		426	5.3	-3.5
		434	6.2	-3.5
		433	6.2	-3.6

ELEM	MAT	SEC	LC		NODE	Fxx	Fyy	Fxy	Fmax	Fmin	ANGLE
384	1	1	SX (RS)		Cent	1.1	0.3	0.7	1.5	-0.1	30.53
					426	0.7	0.5	0.7	1.3	-0.1	39.71
					427	0.7	0.2	0.7	1.2	-0.3	34.69
					435	1.4	0.2	0.7	1.7	-0.1	24.05
					434	1.4	0.5	0.7	1.8	0.1	27.36

	NODE	Mxx	Myy	Mxy	Mmax	Mmin	ANGLE
	Cent	3.7	0.6	0.8	3.9	0.4	14.34
	426	3.8	0.4	0.9	4.0	0.2	13.65
	427	3.3	0.5	0.8	3.5	0.3	14.91
	435	3.4	0.8	0.8	3.6	0.6	16.16
	434	4.3	1.0	0.9	4.5	0.7	13.52

	NODE	Vxx	Vyy
	Cent	1.3	1.0
	426	1.0	1.2
	427	1.0	0.8
	435	1.6	0.8
	434	1.6	1.2

LC		NODE	Fxx	Fyy	Fxy	Fmax	Fmin	ANGLE
SY (RS)		Cent	0.5	0.3	1.7	2.1	-1.3	43.05
		426	0.3	0.5	1.7	2.1	-1.3	46.60
		427	0.3	0.1	1.7	1.9	-1.5	43.11
		435	0.7	0.1	1.7	2.1	-1.3	39.66
		434	0.7	0.5	1.7	2.3	-1.1	43.10

	NODE	Mxx	Myy	Mxy	Mmax	Mmin	ANGLE
	Cent	0.6	1.3	0.4	1.5	0.3	64.96
	426	0.4	1.5	0.4	1.6	0.3	70.77
	427	0.6	1.5	0.4	1.7	0.4	68.25
	435	0.7	1.2	0.5	1.5	0.5	58.82
	434	0.5	0.9	0.4	1.2	0.2	57.74

	NODE	Vxx	Vyy
	Cent	0.5	0.9
	426	0.3	1.2
	427	0.3	0.6
	435	0.6	0.6
	434	0.6	1.2

LC		NODE	Fxx	Fyy	Fxy	Fmax	Fmin	ANGLE
RC ENV~1	Max	Cent	0.5	1.4	2.2	2.7	0.4	51.40
		426	0.3	1.4	2.2	2.8	0.3	52.66
		427	0.3	1.5	2.2	2.6	0.3	50.36
		435	0.7	1.5	2.2	2.6	0.4	50.20
		434	0.7	1.4	2.2	2.8	0.5	52.50
	Min	Cent	-2.2	0.4	-1.2	0.4	-2.8	-84.43
		426	-1.5	0.2	-1.2	0.2	-2.2	-81.42
		427	-1.5	0.5	-1.2	0.5	-2.1	-83.01
		435	-2.9	0.5	-1.2	0.5	-3.4	-85.84
		434	-2.9	0.2	-1.2	0.2	-3.4	-85.32

	NODE	Mxx	Myy	Mxy	Mmax	Mmin	ANGLE
Max	Cent	1.6	2.6	1.4	3.2	0.4	48.20
	426	2.8	2.4	1.4	3.6	0.5	30.33
	427	0.2	2.6	1.2	2.7	-0.5	80.87
	435	-0.1	2.7	1.3	2.9	-0.7	65.63
	434	3.6	2.8	1.5	4.7	1.7	37.74

Min	Cent	-5.8	0.0	-0.3	0.0	-5.8	88.12
	426	-4.7	-0.6	-0.4	-0.6	-4.7	84.83
	427	-6.5	-0.5	-0.5	-0.5	-6.5	-89.06
	435	-7.0	0.2	-0.4	0.2	-7.0	89.12
	434	-5.1	0.9	-0.2	0.9	-5.1	-87.74

	NODE	Vxx	Vyy
Max	Cent	7.9	-0.3
	426	6.8	-0.5
	427	6.8	-0.1
	435	8.9	-0.1
	434	8.9	-0.5
Min	Cent	3.1	-3.9
	426	3.1	-4.9
	427	3.1	-3.0
	435	3.1	-3.0
	434	3.1	-4.9

LC		NODE	Fxx	Fyy	Fxy	Fmax	Fmin	ANGLE
RC ENV~2	Max	Cent	0.2	1.0	1.0	1.4	0.2	70.06
		426	0.2	1.0	1.0	1.3	0.2	66.13
		427	0.2	1.1	1.0	1.5	0.1	67.86
		435	0.2	1.1	1.0	1.4	0.2	73.02
		434	0.2	1.0	1.0	1.2	0.2	73.72
	Min	Cent	-1.6	0.6	0.1	0.7	-1.9	79.13
		426	-1.1	0.5	0.1	0.8	-1.5	74.03
		427	-1.1	0.6	0.1	0.7	-1.5	77.99
		435	-2.0	0.6	0.1	0.7	-2.4	77.12
		434	-2.0	0.5	0.1	0.8	-2.4	71.96

	NODE	Mxx	Myy	Mxy	Mmax	Mmin	ANGLE
Max	Cent	-1.0	1.3	0.6	1.4	-1.2	79.82
	426	0.3	1.0	0.5	1.1	-0.1	72.53
	427	-2.3	1.0	0.5	1.1	-2.4	83.55
	435	-2.8	1.5	0.6	1.6	-2.8	83.21
	434	0.7	2.0	0.7	2.4	0.4	66.82
Min	Cent	-3.7	0.8	-0.1	0.8	-3.7	-88.29
	426	-2.5	0.1	-0.1	0.2	-2.5	83.08
	427	-4.7	0.4	-0.3	0.4	-4.7	-86.79
	435	-5.1	0.8	-0.1	0.8	-5.1	-88.65
	434	-2.5	1.3	-0.0	1.3	-2.5	-89.99

	NODE	Vxx	Vyy
Max	Cent	5.8	-0.8
	426	5.1	-1.0
	427	5.1	-0.5
	435	6.6	-0.5
	434	6.6	-1.0
Min	Cent	3.9	-2.8
	426	3.7	-3.5
	427	3.7	-2.1
	435	4.1	-2.1
	434	4.1	-3.5

ELEM	MAT	SEC	LC		NODE	Fxx	Fyy	Fxy	Fmax	Fmin	ANGLE
385	1	1	SX	(RS)	Cent	1.0	0.2	0.6	1.3	-0.1	27.54
					427	0.8	0.2	0.6	1.2	-0.2	32.20
					428	0.8	0.2	0.6	1.2	-0.2	31.30
					436	1.3	0.2	0.6	1.5	-0.1	23.68
					435	1.3	0.2	0.6	1.6	-0.1	24.30

	NODE	Mxx	Myy	Mxy	Mmax	Mmin	ANGLE
	Cent	2.8	0.6	0.7	3.1	0.4	16.45
	427	3.2	0.5	0.7	3.4	0.3	14.19
	428	2.5	0.5	0.7	2.7	0.3	17.47
	436	2.5	0.7	0.7	2.7	0.5	19.56
	435	3.3	0.8	0.8	3.5	0.6	15.69

	NODE	Vxx	Vyy
	Cent	1.7	0.8

	427	1.6	0.8	
	428	1.6	0.8	
	436	1.8	0.8	
	435	1.8	0.8	

LC		NODE	Fxx	Fyy	Fxy	Fmax	Fmin	ANGLE
SY (RS)		Cent	0.5	0.1	1.5	1.8	-1.2	41.78
		427	0.4	0.1	1.5	1.7	-1.2	41.74
		428	0.4	0.3	1.5	1.8	-1.1	43.70
		436	0.6	0.3	1.5	1.9	-1.0	41.74
		435	0.6	0.1	1.5	1.8	-1.2	39.81

	NODE	Mxx	Myy	Mxy	Mmax	Mmin	ANGLE
	Cent	0.6	1.4	0.5	1.6	0.4	65.35
	427	0.6	1.5	0.5	1.7	0.4	68.25
	428	0.6	1.6	0.4	1.8	0.4	68.32
	436	0.6	1.3	0.5	1.5	0.4	62.35
	435	0.6	1.2	0.5	1.5	0.3	61.57

	NODE	Vxx	Vyy
	Cent	0.1	0.6
	427	0.1	0.6
	428	0.1	0.6
	436	0.2	0.6
	435	0.2	0.6

LC		NODE	Fxx	Fyy	Fxy	Fmax	Fmin	ANGLE
RC ENV~1	Max	Cent	0.5	1.5	1.8	2.3	0.3	51.86
		427	0.4	1.5	1.8	2.2	0.3	50.76
		428	0.4	1.5	1.8	2.4	0.3	52.11
		436	0.6	1.5	1.8	2.3	0.3	52.88
		435	0.6	1.5	1.8	2.2	0.3	51.55
	Min	Cent	-2.2	0.5	-1.1	0.5	-2.4	-83.33
		427	-1.7	0.5	-1.1	0.5	-2.0	-81.76
		428	-1.7	0.4	-1.1	0.6	-2.0	-81.88
		436	-2.6	0.4	-1.1	0.5	-2.8	-84.41
		435	-2.6	0.5	-1.1	0.5	-2.8	-84.35

	NODE	Mxx	Myy	Mxy	Mmax	Mmin	ANGLE
Max	Cent	-1.2	2.5	1.0	2.6	-1.5	83.40
	427	-0.1	2.5	1.0	2.6	-0.6	81.87
	428	-2.1	2.4	0.8	2.4	-2.2	84.62
	436	-2.4	2.4	0.8	2.4	-2.6	84.73
	435	-0.2	2.6	1.1	2.8	-0.6	82.15
Min	Cent	-7.4	-0.3	-0.9	-0.3	-7.5	-86.95
	427	-6.6	-0.5	-0.7	-0.5	-6.6	-87.48
	428	-7.8	-0.8	-1.0	-0.7	-7.9	-86.06
	436	-8.5	-0.2	-1.0	-0.1	-8.6	-86.49
	435	-7.0	0.2	-0.8	0.2	-7.0	-87.76

	NODE	Vxx	Vyy
Max	Cent	4.2	-0.0
	427	4.0	-0.1
	428	4.0	0.1
	436	4.5	0.1
	435	4.5	-0.1
Min	Cent	0.5	-2.6
	427	0.5	-3.0
	428	0.5	-2.2
	436	0.5	-2.2
	435	0.5	-3.0

LC		NODE	Fxx	Fyy	Fxy	Fmax	Fmin	ANGLE
RC ENV~2	Max	Cent	0.2	1.1	0.7	1.3	0.1	75.32
		427	0.2	1.1	0.7	1.3	0.2	73.52
		428	0.2	1.1	0.7	1.3	0.2	73.54
		436	0.1	1.1	0.7	1.3	0.1	76.79
		435	0.1	1.1	0.7	1.3	0.1	76.78
	Min	Cent	-1.5	0.6	0.1	0.7	-1.7	74.77

427	-1.2	0.6	0.1	0.7	-1.4	74.07
428	-1.2	0.6	0.1	0.6	-1.4	73.04
436	-1.8	0.6	0.1	0.6	-2.0	75.41
435	-1.8	0.6	0.1	0.7	-2.0	76.21

	NODE	Mxx	Myy	Mxy	Mmax	Mmin	ANGLE
Max	Cent	-3.6	1.1	0.3	1.1	-3.6	86.70
	427	-2.6	1.0	0.4	1.0	-2.6	84.93
	428	-4.2	0.8	0.2	0.8	-4.2	87.83
	436	-4.7	1.2	0.2	1.2	-4.7	88.53
	435	-2.8	1.5	0.4	1.5	-2.8	86.06
Min	Cent	-5.4	0.4	-0.5	0.5	-5.5	-84.97
	427	-4.8	0.4	-0.4	0.4	-4.8	-87.15
	428	-5.8	0.1	-0.6	0.1	-5.8	-84.16
	436	-6.3	0.4	-0.7	0.4	-6.3	-85.13
	435	-5.1	0.8	-0.4	0.9	-5.1	-86.17

	NODE	Vxx	Vyy
Max	Cent	3.1	-0.5
	427	2.9	-0.5
	428	2.9	-0.4
	436	3.3	-0.4
	435	3.3	-0.5
Min	Cent	1.6	-1.8
	427	1.6	-2.1
	428	1.6	-1.6
	436	1.7	-1.6
	435	1.7	-2.1

ELEM	MAT	SEC	LC	NODE	Fxx	Fyy	Fxy	Fmax	Fmin	ANGLE
386	1	1	SX (RS)	Cent	0.9	0.2	0.6	1.2	-0.1	28.26
				428	0.7	0.2	0.6	1.1	-0.2	32.17
				429	0.7	0.2	0.6	1.1	-0.2	32.24
				437	1.1	0.2	0.6	1.4	-0.1	24.68
				436	1.1	0.2	0.6	1.4	-0.1	24.64

NODE	Mxx	Myy	Mxy	Mmax	Mmin	ANGLE
Cent	2.0	0.5	0.6	2.3	0.3	19.69
428	2.3	0.5	0.6	2.5	0.3	16.65
429	1.7	0.5	0.6	1.9	0.3	21.64
437	1.9	0.6	0.6	2.1	0.4	22.42
436	2.4	0.7	0.7	2.7	0.5	18.94

NODE	Vxx	Vyy
Cent	1.8	0.9
428	1.7	0.8
429	1.7	1.0
437	1.9	1.0
436	1.9	0.8

LC	NODE	Fxx	Fyy	Fxy	Fmax	Fmin	ANGLE
SY (RS)	Cent	0.5	0.4	1.4	1.8	-1.0	43.39
	428	0.4	0.3	1.4	1.8	-1.1	43.22
	429	0.4	0.5	1.4	1.9	-1.0	45.18
	437	0.6	0.5	1.4	1.9	-0.9	43.41
	436	0.6	0.3	1.4	1.9	-1.0	41.46

NODE	Mxx	Myy	Mxy	Mmax	Mmin	ANGLE
Cent	0.6	1.4	0.4	1.5	0.4	67.23
428	0.6	1.6	0.4	1.7	0.5	69.98
429	0.6	1.5	0.3	1.6	0.5	71.51
437	0.6	1.1	0.4	1.3	0.4	62.89
436	0.6	1.3	0.5	1.5	0.4	63.21

NODE	Vxx	Vyy
Cent	0.1	0.7
428	0.2	0.6
429	0.2	0.7
437	0.1	0.7

		NODE	Fxx	Fyy	Fxy	Fmax	Fmin	ANGLE
		436	0.1	0.6				

LC		NODE	Fxx	Fyy	Fxy	Fmax	Fmin	ANGLE
RC ENV~1	Max	Cent	0.4	1.6	1.7	2.3	0.2	53.81
		428	0.3	1.5	1.7	2.2	0.3	52.57
		429	0.3	1.6	1.7	2.3	0.3	54.30
		437	0.5	1.6	1.7	2.3	0.1	54.89
		436	0.5	1.5	1.7	2.2	0.1	53.19
	Min	Cent	-2.0	0.3	-1.2	0.6	-2.1	-80.81
		428	-1.7	0.4	-1.2	0.6	-1.8	-79.04
		429	-1.7	0.2	-1.2	0.6	-1.8	-79.16
		437	-2.3	0.2	-1.2	0.6	-2.4	-82.16
		436	-2.3	0.4	-1.2	0.6	-2.5	-82.10

		NODE	Mxx	Myy	Mxy	Mmax	Mmin	ANGLE
	Max	Cent	-2.6	2.2	0.5	2.2	-2.6	87.63
		428	-2.0	2.4	0.6	2.4	-2.2	86.07
		429	-2.8	1.9	0.4	1.9	-2.8	88.37
		437	-3.0	2.0	0.3	2.0	-3.0	89.16
		436	-2.3	2.4	0.6	2.4	-2.4	86.90
	Min	Cent	-7.6	-0.5	-1.5	-0.5	-7.9	-83.63
		428	-7.5	-0.7	-1.2	-0.7	-7.7	-85.04
		429	-7.1	-1.0	-1.5	-1.0	-7.5	-82.99
		437	-7.7	-0.3	-1.8	-0.2	-8.1	-82.61
		436	-8.3	-0.2	-1.5	-0.1	-8.5	-84.05

		NODE	Vxx	Vyy
	Max	Cent	1.8	0.1
		428	1.7	0.1
		429	1.7	0.1
		437	1.9	0.1
		436	1.9	0.1
	Min	Cent	-1.8	-2.4
		428	-1.7	-2.2
		429	-1.7	-2.7
		437	-1.9	-2.7
		436	-1.9	-2.2

LC		NODE	Fxx	Fyy	Fxy	Fmax	Fmin	ANGLE
RC ENV~2	Max	Cent	0.1	1.2	0.5	1.2	0.1	79.96
		428	0.2	1.1	0.5	1.2	0.1	78.82
		429	0.2	1.2	0.5	1.3	0.1	79.10
		437	-0.0	1.2	0.5	1.3	-0.0	80.89
		436	-0.0	1.1	0.5	1.2	-0.0	80.70
	Min	Cent	-1.4	0.6	0.1	0.6	-1.5	79.76
		428	-1.2	0.6	0.1	0.6	-1.3	78.01
		429	-1.2	0.6	0.1	0.6	-1.3	78.29
		437	-1.6	0.6	0.1	0.6	-1.7	81.08
		436	-1.6	0.6	0.1	0.6	-1.7	80.92

		NODE	Mxx	Myy	Mxy	Mmax	Mmin	ANGLE
	Max	Cent	-4.5	0.8	-0.1	0.8	-4.5	-89.05
		428	-4.1	0.9	0.1	0.9	-4.1	89.19
		429	-4.4	0.5	-0.1	0.5	-4.4	-88.50
		437	-4.8	0.9	-0.2	0.9	-4.8	-86.66
		436	-4.6	1.2	-0.0	1.2	-4.6	-88.88
	Min	Cent	-5.7	0.1	-1.0	0.2	-5.8	-81.98
		428	-5.6	0.1	-0.8	0.2	-5.6	-82.46
		429	-5.3	-0.5	-1.0	-0.3	-5.5	-78.69
		437	-5.7	0.0	-1.2	0.2	-6.0	-80.24
		436	-6.1	0.4	-1.0	0.5	-6.3	-82.76

		NODE	Vxx	Vyy
	Max	Cent	0.6	-0.6
		428	0.6	-0.4
		429	0.6	-0.8
		437	0.6	-0.8
		436	0.6	-0.4
	Min	Cent	-0.9	-1.7
		428	-0.8	-1.6
		429	-0.8	-1.9

					437	-0.9	-1.9			
					436	-0.9	-1.6			

ELEM	MAT	SEC	LC		NODE	Fxx	Fyy	Fxy	Fmax	Fmin	ANGLE
387	1	1	SX	(RS)	Cent	0.8	0.3	0.5	1.1	-0.0	33.04
					429	0.5	0.2	0.5	0.9	-0.2	35.77
					430	0.5	0.4	0.5	1.0	-0.0	42.83
					438	1.0	0.4	0.5	1.3	0.2	29.74
					437	1.0	0.2	0.5	1.3	-0.0	24.86

		NODE	Mxx	Myy	Mxy	Mmax	Mmin	ANGLE
		Cent	1.7	0.4	0.5	1.9	0.3	18.28
		429	1.7	0.5	0.5	1.9	0.3	19.17
		430	1.4	0.7	0.4	1.6	0.5	25.14
		438	2.2	0.5	0.5	2.3	0.4	14.66
		437	1.9	0.6	0.6	2.2	0.4	20.88

		NODE	Vxx	Vyy
		Cent	1.7	1.3
		429	1.4	1.0
		430	1.4	1.6
		438	2.1	1.6
		437	2.1	1.0

LC		NODE	Fxx	Fyy	Fxy	Fmax	Fmin	ANGLE
SY	(RS)	Cent	0.6	0.4	1.6	2.1	-1.1	43.17
		429	0.4	0.4	1.6	2.0	-1.1	45.22
		430	0.4	0.4	1.6	2.0	-1.1	45.02
		438	0.8	0.4	1.6	2.2	-0.9	41.22
		437	0.8	0.4	1.6	2.2	-0.9	41.41

		NODE	Mxx	Myy	Mxy	Mmax	Mmin	ANGLE
		Cent	0.5	1.1	0.2	1.2	0.5	72.83
		429	0.6	1.5	0.2	1.5	0.5	76.08
		430	0.6	1.3	0.2	1.4	0.5	75.57
		438	0.4	0.7	0.2	0.8	0.3	62.06
		437	0.7	1.2	0.3	1.3	0.6	62.45

		NODE	Vxx	Vyy
		Cent	0.7	1.2
		429	0.5	0.7
		430	0.5	1.7
		438	0.9	1.7
		437	0.9	0.7

LC		NODE	Fxx	Fyy	Fxy	Fmax	Fmin	ANGLE
RC ENV~1	Max	Cent	0.2	1.8	1.7	2.4	0.0	53.64
		429	0.2	1.7	1.7	2.4	0.2	54.34
		430	0.2	1.9	1.7	2.4	0.2	54.73
		438	0.4	1.9	1.7	2.5	0.1	53.00
		437	0.4	1.7	1.7	2.4	-0.0	52.60
	Min	Cent	-1.9	0.3	-1.4	0.5	-2.0	-78.58
		429	-1.7	0.3	-1.4	0.6	-1.8	-76.93
		430	-1.7	0.3	-1.4	0.4	-1.8	-75.34
		438	-2.1	0.3	-1.4	0.4	-2.2	-80.04
		437	-2.1	0.3	-1.4	0.6	-2.3	-80.83

		NODE	Mxx	Myy	Mxy	Mmax	Mmin	ANGLE
	Max	Cent	-2.1	1.6	-0.1	1.6	-2.1	-85.73
		429	-2.4	2.0	0.2	2.0	-2.4	-89.12
		430	-1.9	1.1	-0.1	1.1	-1.9	-85.25
		438	-1.3	1.3	-0.4	1.6	-1.3	-64.23
		437	-2.7	2.1	-0.0	2.1	-2.7	-87.07
	Min	Cent	-5.8	-0.9	-2.3	-0.5	-6.6	-78.45
		429	-6.3	-0.9	-1.8	-0.9	-6.8	-81.79
		430	-4.9	-2.3	-2.2	-1.4	-5.9	-73.17
		438	-5.6	-0.8	-2.8	0.0	-6.1	-70.51
		437	-7.2	-0.3	-2.4	-0.1	-7.9	-80.36

	NODE	Vxx	Vyy
Max	Cent	-0.2	-0.0
	429	-0.3	0.1
	430	-0.3	-0.0
	438	-0.1	-0.0
	437	-0.1	0.1
Min	Cent	-4.8	-3.5
	429	-4.1	-2.7
	430	-4.1	-4.5
	438	-5.5	-4.5
	437	-5.5	-2.7

LC		NODE	Fxx	Fyy	Fxy	Fmax	Fmin	ANGLE
RC ENV~2	Max	Cent	-0.0	1.3	0.3	1.3	-0.0	83.90
		429	0.0	1.2	0.3	1.2	0.0	83.28
		430	0.0	1.3	0.3	1.4	0.0	83.67
		438	-0.1	1.3	0.3	1.4	-0.1	84.41
		437	-0.1	1.2	0.3	1.2	-0.1	84.11
	Min	Cent	-1.3	0.6	0.0	0.6	-1.4	87.46
		429	-1.2	0.6	0.0	0.6	-1.2	86.94
		430	-1.2	0.6	0.0	0.6	-1.2	87.13
		438	-1.5	0.6	0.0	0.6	-1.5	87.84
		437	-1.5	0.6	0.0	0.6	-1.5	87.73

	NODE	Mxx	Myy	Mxy	Mmax	Mmin	ANGLE
Max	Cent	-3.8	0.5	-0.5	0.6	-3.9	-81.38
	429	-4.0	0.5	-0.3	0.6	-4.0	-86.51
	430	-3.2	-0.2	-0.5	-0.1	-3.3	-80.84
	438	-3.2	0.7	-0.8	1.2	-3.6	-66.17
	437	-4.6	1.0	-0.6	1.1	-4.6	-77.25
Min	Cent	-4.3	-0.5	-1.6	-0.1	-4.9	-73.79
	429	-4.7	-0.3	-1.2	-0.0	-5.0	-75.70
	430	-3.7	-1.5	-1.5	-0.8	-4.3	-68.49
	438	-4.0	-0.4	-1.9	0.1	-4.4	-72.06
	437	-5.4	0.1	-1.7	0.4	-5.8	-76.87

	NODE	Vxx	Vyy
Max	Cent	-1.6	-1.3
	429	-1.4	-0.8
	430	-1.4	-1.6
	438	-1.8	-1.6
	437	-1.8	-0.8
Min	Cent	-3.5	-2.5
	429	-3.0	-1.9
	430	-3.0	-3.2
	438	-4.0	-3.2
	437	-4.0	-1.9

ELEM	MAT	SEC	LC		NODE	Fxx	Fyy	Fxy	Fmax	Fmin	ANGLE
388	1	1	SX (RS)		Cent	0.4	0.4	0.5	0.9	-0.2	44.16
					430	0.4	0.4	0.5	0.9	-0.2	45.95
					431	0.4	0.3	0.5	0.9	-0.2	44.09
					439	0.4	0.3	0.5	0.9	-0.2	42.45
					438	0.4	0.4	0.5	0.9	-0.1	44.31

NODE	Mxx	Myy	Mxy	Mmax	Mmin	ANGLE
Cent	1.7	0.4	0.5	1.9	0.2	19.26
430	1.4	0.7	0.4	1.6	0.5	25.27
431	1.1	0.7	0.7	1.6	0.1	37.68
439	2.0	0.4	0.6	2.2	0.2	18.65
438	2.5	0.6	0.4	2.6	0.5	11.14

NODE	Vxx	Vyy
Cent	1.0	1.0
430	0.9	1.6
431	0.9	0.3
439	1.1	0.3
438	1.1	1.6

LC		NODE	Fxx	Fyy	Fxy	Fmax	Fmin	ANGLE
SY (RS)		Cent	0.4	0.6	1.5	2.0	-1.0	47.58
		430	0.4	0.4	1.5	1.9	-1.1	45.01
		431	0.4	1.0	1.5	2.2	-0.8	50.49
		439	0.3	1.0	1.5	2.2	-0.9	51.75
		438	0.3	0.4	1.5	1.9	-1.1	46.33

		NODE	Mxx	Myy	Mxy	Mmax	Mmin	ANGLE
		Cent	0.6	0.9	0.4	1.2	0.3	57.21
		430	0.6	1.3	0.3	1.4	0.5	71.14
		431	0.8	1.5	0.4	1.7	0.6	63.89
		439	0.9	0.8	0.4	1.3	0.4	39.75
		438	0.6	0.7	0.3	0.9	0.4	53.56

		NODE	Vxx	Vyy
		Cent	1.4	2.4
		430	0.9	1.7
		431	0.9	3.2
		439	1.9	3.2
		438	1.9	1.7

LC		NODE	Fxx	Fyy	Fxy	Fmax	Fmin	ANGLE
RC ENV~1	Max	Cent	-0.1	2.0	1.6	2.4	-0.1	58.79
		430	-0.0	1.9	1.6	2.3	-0.1	55.82
		431	-0.0	2.0	1.6	2.8	-0.1	60.72
		439	-0.2	2.0	1.6	2.7	-0.2	62.60
		438	-0.2	1.9	1.6	2.2	-0.2	58.07
	Min	Cent	-1.9	0.2	-1.4	0.6	-1.9	-73.47
		430	-1.7	0.3	-1.4	0.5	-1.8	-71.49
		431	-1.7	-0.2	-1.4	0.7	-2.0	-73.19
		439	-2.1	-0.2	-1.4	0.7	-2.2	-75.08
		438	-2.1	0.3	-1.4	0.5	-2.2	-73.71

		NODE	Mxx	Myy	Mxy	Mmax	Mmin	ANGLE
	Max	Cent	-0.4	0.8	-0.4	1.3	-0.5	-44.58
		430	-1.2	1.2	-0.2	1.2	-1.2	-83.90
		431	-0.6	0.3	0.0	0.3	-0.7	-79.77
		439	1.2	1.0	-0.5	3.5	0.3	-37.58
		438	-0.4	1.4	-0.7	2.4	-0.7	-59.30
	Min	Cent	-3.8	-2.0	-2.7	-0.3	-4.7	-61.56
		430	-4.1	-2.0	-2.3	-1.1	-5.0	-66.89
		431	-2.7	-4.1	-2.2	-1.5	-5.3	-42.05
		439	-3.0	-1.6	-3.0	0.4	-3.9	-57.87
		438	-5.4	-0.6	-3.2	0.4	-5.7	-71.21

		NODE	Vxx	Vyy
	Max	Cent	-1.4	0.3
		430	-1.2	-0.0
		431	-1.2	0.6
		439	-1.6	0.6
		438	-1.6	-0.0
	Min	Cent	-6.2	-5.4
		430	-4.6	-4.5
		431	-4.6	-6.4
		439	-7.7	-6.4
		438	-7.7	-4.5

LC		NODE	Fxx	Fyy	Fxy	Fmax	Fmin	ANGLE
RC ENV~2	Max	Cent	-0.1	1.4	0.2	1.4	-0.1	87.01
		430	-0.1	1.3	0.2	1.4	-0.1	86.74
		431	-0.1	1.5	0.2	1.5	-0.1	86.91
		439	-0.2	1.5	0.2	1.5	-0.2	87.24
		438	-0.2	1.3	0.2	1.4	-0.2	87.11
	Min	Cent	-1.4	0.6	-0.0	0.6	-1.4	-89.99
		430	-1.2	0.6	-0.0	0.6	-1.2	-89.99
		431	-1.2	0.7	-0.0	0.7	-1.2	-89.99
		439	-1.5	0.7	-0.0	0.7	-1.5	-89.99
		438	-1.5	0.6	-0.0	0.6	-1.5	-89.99

	NODE	Mxx	Myy	Mxy	Mmax	Mmin	ANGLE
Max	Cent	-1.2	-0.1	-0.9	0.9	-2.3	-46.94
	430	-2.2	-0.1	-0.6	0.0	-2.8	-77.00
	431	-0.7	-1.2	-0.7	0.1	-2.2	-27.71
	439	0.6	0.3	-1.1	2.4	-1.5	-39.41
	438	-2.3	0.8	-1.0	1.7	-3.1	-61.22
Min	Cent	-2.3	-1.3	-1.9	-0.1	-3.3	-57.12
	430	-2.9	-1.3	-1.6	-0.5	-3.6	-63.41
	431	-1.9	-2.9	-1.5	-1.0	-3.7	-39.58
	439	-1.2	-1.0	-2.1	0.6	-2.8	-48.61
	438	-3.2	-0.2	-2.2	0.5	-3.9	-66.85

	NODE	Vxx	Vyy
Max	Cent	-2.8	-2.1
	430	-2.1	-1.6
	431	-2.1	-2.4
	439	-3.5	-2.4
	438	-3.5	-1.6
Min	Cent	-4.5	-3.9
	430	-3.3	-3.2
	431	-3.3	-4.6
	439	-5.6	-4.6
	438	-5.6	-3.2

ELEM	MAT	SEC	LC	NODE	Fxx	Fyy	Fxy	Fmax	Fmin	ANGLE
389	1	1	SX (RS)	Cent	0.2	0.2	0.6	0.8	-0.4	44.03
				431	0.1	0.3	0.6	0.8	-0.4	50.83
				432	0.1	0.0	0.6	0.6	-0.5	43.49
				440	0.4	0.0	0.6	0.8	-0.4	35.43
				439	0.4	0.3	0.6	1.0	-0.2	42.50

	NODE	Mxx	Myy	Mxy	Mmax	Mmin	ANGLE
	Cent	1.1	0.2	1.3	2.0	-0.7	35.02
	431	0.9	0.7	0.9	1.7	-0.0	41.74
	432	0.1	0.0	1.4	1.5	-1.4	43.97
	440	2.0	0.4	1.7	3.1	-0.7	32.59
	439	1.8	0.4	1.1	2.4	-0.2	29.52

	NODE	Vxx	Vyy
	Cent	1.2	0.2
	431	2.1	0.3
	432	2.1	0.0
	440	0.9	0.0
	439	0.9	0.3

LC	NODE	Fxx	Fyy	Fxy	Fmax	Fmin	ANGLE
SY (RS)	Cent	0.3	1.2	0.6	1.5	-0.0	62.04
	431	0.4	1.0	0.6	1.4	-0.0	56.86
	432	0.4	1.4	0.6	1.7	0.1	64.09
	440	0.4	1.4	0.6	1.7	0.1	64.37
	439	0.4	1.0	0.6	1.4	-0.0	57.24

	NODE	Mxx	Myy	Mxy	Mmax	Mmin	ANGLE
	Cent	1.3	0.9	0.3	1.4	0.7	26.50
	431	0.8	1.5	0.3	1.7	0.7	67.96
	432	1.0	1.7	0.1	1.7	1.0	82.31
	440	1.9	0.8	0.2	2.0	0.7	9.13
	439	1.5	0.8	0.4	1.7	0.6	27.04

	NODE	Vxx	Vyy
	Cent	0.7	3.3
	431	0.5	3.2
	432	0.5	3.3
	440	0.9	3.3
	439	0.9	3.2

LC	NODE	Fxx	Fyy	Fxy	Fmax	Fmin	ANGLE

```
RC ENV~1  Max   Cent       -0.3        2.1        0.7        2.2       -0.4      75.26
                 431       -0.1        2.1        0.7        2.1       -0.2      89.04
                 432       -0.1        2.3        0.7        2.5       -0.2      75.73
                 440       -0.2        2.3        0.7        2.5       -0.4      76.48
                 439       -0.2        2.1        0.7        2.1       -0.4      89.12
          Min   Cent       -1.9       -0.3       -0.6        0.1       -1.9     -57.95
                 431       -1.7       -0.1       -0.6        0.2       -1.7     -61.67
                 432       -1.7       -0.5       -0.6       -0.1       -1.7     -54.24
                 440       -2.0       -0.5       -0.6       -0.1       -2.0     -56.62
                 439       -2.0       -0.1       -0.6        0.2       -2.0     -63.49

                      NODE        Mxx        Myy        Mxy       Mmax       Mmin      ANGLE
          ---- ------ ---------- ---------- ---------- ---------- ---------- ----------
          Max   Cent        2.0        0.2        0.6        2.6        0.1     -19.12
                 431        0.3        0.4        0.3        1.0       -0.4     -20.88
                 432        1.2       -0.0        1.1        1.4       -0.2      -9.15
                 440        4.4        0.7        1.1        4.8        0.6     -14.53
                 439        2.3        1.2        0.3        3.7        0.6     -32.74
          Min   Cent       -1.8       -3.0       -1.9       -0.7       -3.7     -49.60
                 431       -2.1       -3.9       -1.9       -1.3       -4.8     -35.27
                 432       -1.8       -5.2       -1.8       -1.6       -5.5     -13.89
                 440       -1.6       -2.1       -2.3       -0.3       -3.4     -57.71
                 439       -2.3       -1.4       -2.4        0.3       -3.4     -59.99

                      NODE        Vxx        Vyy
          ---- ------ ---------- ----------
          Max   Cent       -0.2        0.6
                 431        1.1        0.6
                 432        1.1        0.5
                 440       -0.8        0.5
                 439       -0.8        0.6
          Min   Cent       -3.0       -6.8
                 431       -3.0       -6.4
                 432       -3.0       -7.1
                 440       -4.0       -7.1
                 439       -4.0       -6.4

       LC         NODE        Fxx        Fyy        Fxy       Fmax       Fmin      ANGLE
--------- ---- ------ ---------- ---------- ---------- ---------- ---------- ----------
RC ENV~2  Max   Cent       -0.3        1.5        0.1        1.5       -0.3      89.08
                 431       -0.2        1.5        0.1        1.5       -0.2      89.03
                 432       -0.2        1.5        0.1        1.5       -0.2      89.04
                 440       -0.4        1.5        0.1        1.5       -0.4      89.12
                 439       -0.4        1.5        0.1        1.5       -0.4      89.11
          Min   Cent       -1.3        0.7       -0.0        0.7       -1.3     -88.52
                 431       -1.2        0.7       -0.0        0.7       -1.2     -88.29
                 432       -1.2        0.8       -0.0        0.8       -1.2     -88.49
                 440       -1.4        0.8       -0.0        0.8       -1.4     -88.71
                 439       -1.4        0.7       -0.0        0.7       -1.4     -88.55

                      NODE        Mxx        Myy        Mxy       Mmax       Mmin      ANGLE
          ---- ------ ---------- ---------- ---------- ---------- ---------- ----------
          Max   Cent        1.3       -0.6       -0.6        1.7       -1.2     -20.02
                 431        0.0       -1.1       -0.6        0.5       -1.7     -21.84
                 432        0.7       -1.7       -0.3        0.8       -1.8      -9.31
                 440        3.0        0.0       -0.6        3.2       -0.3     -15.23
                 439        1.5        0.4       -0.8        2.5       -0.8     -34.62
          Min   Cent       -0.5       -2.0       -1.3        0.0       -2.6     -41.74
                 431       -1.2       -2.7       -1.3       -0.6       -3.3     -39.90
                 432       -0.9       -3.6       -0.8       -0.7       -3.8     -17.97
                 440        0.3       -1.3       -1.3        0.8       -1.9     -35.95
                 439       -0.5       -0.9       -1.7        0.7       -2.0     -44.73

                      NODE        Vxx        Vyy
          ---- ------ ---------- ----------
          Max   Cent       -1.3       -2.5
                 431       -0.7       -2.4
                 432       -0.7       -2.6
                 440       -1.7       -2.6
                 439       -1.7       -2.4
          Min   Cent       -2.2       -4.9
                 431       -1.6       -4.6
                 432       -1.6       -5.1
                 440       -2.9       -5.1
                 439       -2.9       -4.6

  ELEM   MAT    SEC        LC        NODE        Fxx        Fyy        Fxy       Fmax       Fmin      ANGLE
```

```
------ ------ ------ -------- ---- ------ ---------- ---------- ---------- ---------- ---------- ----------
   390      1      1       SX (RS)   Cent        0.7        0.8        0.9        1.7       -0.2      46.69
                                     151        1.2        1.1        0.9        2.1        0.2      43.58
                                     433        1.2        0.8        0.9        1.9        0.0      38.75
                                     441        0.5        0.8        0.9        1.6       -0.3      49.64
                                     154        0.5        1.1        0.9        1.7       -0.2      54.27

                                    NODE        Mxx        Myy        Mxy       Mmax       Mmin      ANGLE
                                ---- ------ ---------- ---------- ---------- ---------- ---------- ----------
                                    Cent        2.9        1.0        1.4        3.6        0.3      28.43
                                     151        4.0        1.3        1.0        4.4        0.9      18.21
                                     433        3.9        0.6        1.7        4.6       -0.1      22.60
                                     441        7.5        3.2        1.6        8.0        2.7      17.94
                                     154        4.3        1.1        0.9        4.5        0.8      14.82

                                    NODE        Vxx        Vyy
                                ---- ------ ---------- ----------
                                    Cent        9.9        2.5
                                     151        0.2        0.2
                                     433        0.2        5.2
                                     441       19.6        5.2
                                     154       19.6        0.2


                          LC        NODE        Fxx        Fyy        Fxy       Fmax       Fmin      ANGLE
                       -------- ---- ------ ---------- ---------- ---------- ---------- ---------- ----------
                          SY (RS)   Cent        0.7        2.5        1.9        3.7       -0.5      57.52
                                     151        0.5        3.4        1.9        4.3       -0.5      63.66
                                     433        0.5        1.6        1.9        3.0       -0.9      53.56
                                     441        1.1        1.6        1.9        3.3       -0.6      49.10
                                     154        1.1        3.4        1.9        4.4        0.0      60.45

                                    NODE        Mxx        Myy        Mxy       Mmax       Mmin      ANGLE
                                ---- ------ ---------- ---------- ---------- ---------- ---------- ----------
                                    Cent        0.8        1.0        0.2        1.1        0.6      58.24
                                     151        0.8        1.0        0.3        1.2        0.6      52.97
                                     433        0.6        0.9        0.2        1.0        0.5      69.50
                                     441        1.5        0.8        0.1        1.5        0.8      10.50
                                     154        3.0        2.7        0.3        3.2        2.5      32.30

                                    NODE        Vxx        Vyy
                                ---- ------ ---------- ----------
                                    Cent        3.8        3.8
                                     151        0.6        5.4
                                     433        0.6        2.5
                                     441        7.2        2.5
                                     154        7.2        5.4


                          LC        NODE        Fxx        Fyy        Fxy       Fmax       Fmin      ANGLE
                       -------- ---- ------ ---------- ---------- ---------- ---------- ---------- ----------
                       RC ENV~1  Max   Cent        0.2        3.2        2.4        4.6       -0.1      61.07
                                     151        0.5        4.3        2.4        5.3        0.1      66.58
                                     433        0.5        2.2        2.4        3.7        0.1      58.54
                                     441        0.8        2.2        2.4        4.0       -0.3      53.25
                                     154        0.8        4.3        2.4        5.5       -0.3      62.94
                                 Min   Cent       -1.6       -1.7       -1.4       -0.0       -2.9     -39.48
                                     151       -2.5       -2.4       -1.4       -0.2       -3.3     -32.52
                                     433       -2.5       -1.0       -1.4       -0.1       -3.4     -76.22
                                     441       -1.4       -1.0       -1.4        0.1       -2.6     -61.39
                                     154       -1.4       -2.4       -1.4       -0.4       -3.4     -34.40

                                    NODE        Mxx        Myy        Mxy       Mmax       Mmin      ANGLE
                                ---- ------ ---------- ---------- ---------- ---------- ---------- ----------
                                 Max   Cent       10.3        5.4        1.7       10.4        5.3      -6.08
                                     151       13.4        3.5        1.3       13.4        3.3      -1.06
                                     433        7.3        2.6        1.9        7.7        2.4      18.93
                                     441       14.6       11.5        2.1       14.6       11.5      -4.36
                                     154       10.1        7.0        1.4       10.5        6.7      15.41
                                 Min   Cent        2.6        2.3       -1.1        3.6        1.4     -41.00
                                     151        3.1        0.9       -0.8        3.4        0.6     -17.29
                                     433       -0.7        0.7       -1.4        1.8       -1.5     -60.50
                                     441       -1.8        2.2       -1.0        2.5       -2.1     -76.33
                                     154        1.6        1.5       -0.4        2.8        1.5       8.62

                                    NODE        Vxx        Vyy
                                ---- ------ ---------- ----------
                                 Max   Cent       13.7       -1.6
                                     151       10.8        0.9
```

			433	10.8	-1.1			
			441	20.3	-1.1			
			154	20.3	0.9			
		Min	Cent	-6.0	-14.0			
			151	6.3	-10.6			
			433	6.3	-17.3			
			441	-18.9	-17.3			
			154	-18.9	-10.6			

LC		NODE	Fxx	Fyy	Fxy	Fmax	Fmin	ANGLE
RC ENV~2	Max	Cent	-0.1	1.1	1.3	1.7	-0.1	65.96
		151	0.1	1.6	1.3	2.0	0.0	71.29
		433	0.1	0.9	1.3	1.2	0.1	66.88
		441	-0.2	0.9	1.3	1.5	-0.3	58.02
		154	-0.2	1.6	1.3	2.2	-0.3	63.15
	Min	Cent	-1.1	0.7	-0.2	0.7	-1.8	86.43
		151	-1.8	0.6	-0.2	0.6	-2.2	-68.74
		433	-1.8	0.4	-0.2	0.7	-2.4	86.33
		441	-0.5	0.4	-0.2	0.7	-1.4	86.54
		154	-0.5	0.6	-0.2	0.6	-1.1	-76.53

		NODE	Mxx	Myy	Mxy	Mmax	Mmin	ANGLE
	Max	Cent	7.6	4.0	0.3	7.6	4.0	-4.64
		151	9.8	2.3	0.3	9.8	2.3	-0.53
		433	5.3	1.7	0.3	5.4	1.6	-6.57
		441	10.4	8.4	0.6	10.4	8.4	-2.04
		154	7.4	4.9	0.5	7.4	4.8	2.15
	Min	Cent	4.2	2.9	-0.4	4.3	2.9	9.88
		151	5.5	1.6	-0.4	5.5	1.6	-1.68
		433	1.5	0.9	-0.6	1.9	0.8	50.93
		441	2.4	3.8	-0.2	4.0	2.2	71.31
		154	4.7	4.2	-0.1	5.1	4.1	44.48

		NODE	Vxx	Vyy
	Max	Cent	7.9	-3.9
		151	8.1	-4.1
		433	8.1	-3.8
		441	8.8	-3.8
		154	8.8	-4.1
	Min	Cent	-0.6	-10.0
		151	6.9	-7.6
		433	6.9	-12.3
		441	-9.0	-12.3
		154	-9.0	-7.6

ELEM	MAT	SEC	LC		NODE	Fxx	Fyy	Fxy	Fmax	Fmin	ANGLE
391	1	1	SX (RS)		Cent	2.0	0.6	1.2	2.7	-0.2	30.23
					433	0.9	1.0	1.2	2.2	-0.3	45.50
					434	0.9	0.5	1.2	2.0	-0.6	40.01
					442	3.1	0.5	1.2	3.6	-0.0	21.86
					441	3.1	1.0	1.2	3.7	0.4	24.78

		NODE	Mxx	Myy	Mxy	Mmax	Mmin	ANGLE
		Cent	5.1	1.4	0.8	5.2	1.2	11.91
		433	4.1	0.6	0.9	4.4	0.4	13.67
		434	4.5	0.8	0.9	4.7	0.6	12.82
		442	4.7	1.6	0.8	4.9	1.4	13.47
		441	6.9	3.1	0.8	7.1	2.9	11.63

		NODE	Vxx	Vyy
		Cent	1.6	3.4
		433	0.4	5.2
		434	0.4	1.6
		442	3.5	1.6
		441	3.5	5.2

LC		NODE	Fxx	Fyy	Fxy	Fmax	Fmin	ANGLE
SY (RS)		Cent	0.8	0.9	2.3	3.2	-1.4	45.49
		433	0.3	1.9	2.3	3.5	-1.3	54.60

		434	0.3	0.2	2.3	2.5	-2.1	44.14
		442	1.5	0.2	2.3	3.2	-1.6	37.05
		441	1.5	1.9	2.3	4.0	-0.6	47.66

	NODE	Mxx	Myy	Mxy	Mmax	Mmin	ANGLE
	Cent	0.6	0.6	0.4	1.0	0.2	44.98
	433	0.4	1.0	0.3	1.1	0.3	66.33
	434	0.7	0.9	0.4	1.2	0.4	52.60
	442	1.1	0.9	0.5	1.5	0.5	38.59
	441	1.5	1.2	0.4	1.8	0.9	36.61

	NODE	Vxx	Vyy
	Cent	2.0	1.3
	433	1.1	2.5
	434	1.1	0.4
	442	3.0	0.4
	441	3.0	2.5

LC		NODE	Fxx	Fyy	Fxy	Fmax	Fmin	ANGLE
RC ENV~1	Max	Cent	1.0	1.6	2.9	3.8	0.3	53.28
		433	0.4	2.4	2.9	4.3	-0.0	57.00
		434	0.4	2.0	2.9	3.4	-0.1	50.98
		442	1.6	2.0	2.9	3.5	0.4	49.88
		441	1.6	2.4	2.9	4.4	0.7	56.04
	Min	Cent	-4.0	-0.3	-1.6	0.2	-5.1	-79.61
		433	-2.0	-1.4	-1.6	-0.2	-3.7	-65.07
		434	-2.0	0.4	-1.6	0.5	-3.3	-73.63
		442	-6.0	0.4	-1.6	0.4	-6.8	-83.31
		441	-6.0	-1.4	-1.6	-0.4	-6.9	-82.01

	NODE	Mxx	Myy	Mxy	Mmax	Mmin	ANGLE
Max	Cent	6.7	5.4	1.8	7.7	3.8	29.17
	433	7.1	2.5	1.8	7.7	1.7	18.06
	434	4.1	3.1	1.8	5.4	1.6	35.97
	442	3.7	6.2	1.8	6.6	2.4	76.85
	441	12.6	11.1	1.8	13.2	10.3	27.87
Min	Cent	-3.5	1.7	0.2	1.7	-3.5	87.71
	433	-1.1	0.6	-0.0	1.0	-1.1	-89.59
	434	-4.8	1.2	0.1	1.3	-4.8	77.78
	442	-5.8	1.6	0.2	1.6	-5.8	88.23
	441	-2.1	2.1	0.1	2.1	-2.1	88.05

	NODE	Vxx	Vyy
Max	Cent	15.4	-0.9
	433	10.3	-1.1
	434	10.3	-0.7
	442	20.4	-0.7
	441	20.4	-1.1
Min	Cent	6.0	-11.9
	433	5.1	-17.3
	434	5.1	-6.5
	442	6.4	-6.5
	441	6.4	-17.3

LC		NODE	Fxx	Fyy	Fxy	Fmax	Fmin	ANGLE
RC ENV~2	Max	Cent	0.3	1.0	1.8	1.6	0.2	68.32
		433	0.0	0.9	1.8	1.4	-0.0	58.66
		434	0.0	1.5	1.8	2.3	-0.1	64.89
		442	0.6	1.5	1.8	1.9	0.4	74.01
		441	0.6	0.9	1.8	1.0	0.5	-58.13
	Min	Cent	-2.8	0.6	-0.2	0.7	-3.5	84.02
		433	-1.4	0.1	-0.2	0.7	-2.6	84.22
		434	-1.4	0.6	-0.2	0.7	-2.3	-68.62
		442	-4.2	0.6	-0.2	0.7	-4.7	83.81
		441	-4.2	0.1	-0.2	0.7	-4.8	70.08

	NODE	Mxx	Myy	Mxy	Mmax	Mmin	ANGLE
Max	Cent	4.0	4.0	1.2	5.2	2.7	44.75
	433	5.1	1.6	1.0	5.3	1.3	12.21
	434	1.3	2.4	1.2	3.2	0.6	57.20

		442	0.4	4.6	1.3	4.9	0.0	76.63
		441	9.0	8.1	1.0	9.6	7.4	30.54
	Min	Cent	-0.5	2.3	0.4	2.4	-0.6	81.11
		433	1.3	0.9	0.4	2.0	0.7	54.45
		434	-2.2	1.7	0.3	1.7	-2.2	85.64
		442	-3.0	2.3	0.3	2.3	-3.0	86.07
		441	1.9	3.7	0.4	3.8	1.7	74.95

	NODE	Vxx	Vyy
Max	Cent	11.3	-2.6
	433	7.7	-3.8
	434	7.7	-1.5
	442	14.9	-1.5
	441	14.9	-3.8
Min	Cent	7.2	-8.5
	433	6.2	-12.3
	434	6.2	-4.6
	442	8.2	-4.6
	441	8.2	-12.3

ELEM	MAT	SEC	LC		NODE	Fxx	Fyy	Fxy	Fmax	Fmin	ANGLE
392	1	1	SX (RS)		Cent	1.8	0.4	0.7	2.0	0.1	22.12
					434	1.3	0.5	0.7	1.7	0.1	29.09
					435	1.3	0.3	0.7	1.7	-0.1	25.40
					443	2.2	0.3	0.7	2.4	0.0	17.47
					442	2.2	0.5	0.7	2.4	0.3	19.49

	NODE	Mxx	Myy	Mxy	Mmax	Mmin	ANGLE
	Cent	3.9	1.1	0.8	4.1	0.9	15.14
	434	4.3	0.8	0.8	4.5	0.6	12.85
	435	3.4	0.9	0.8	3.6	0.7	15.91
	443	3.3	1.3	0.8	3.5	1.1	18.99
	442	4.6	1.6	0.8	4.8	1.4	14.12

	NODE	Vxx	Vyy
	Cent	2.0	1.3
	434	1.6	1.6
	435	1.6	1.0
	443	2.4	1.0
	442	2.4	1.6

LC		NODE	Fxx	Fyy	Fxy	Fmax	Fmin	ANGLE
SY (RS)		Cent	0.7	0.0	1.6	2.0	-1.3	39.24
		434	0.6	0.2	1.6	2.0	-1.2	40.76
		435	0.6	0.1	1.6	2.0	-1.2	40.59
		443	0.8	0.1	1.6	2.1	-1.2	39.32
		442	0.8	0.2	1.6	2.1	-1.2	39.48

	NODE	Mxx	Myy	Mxy	Mmax	Mmin	ANGLE
	Cent	0.6	1.0	0.5	1.4	0.2	54.57
	434	0.5	0.9	0.5	1.2	0.2	57.20
	435	0.7	1.2	0.5	1.5	0.4	58.40
	443	0.6	1.0	0.6	1.4	0.2	55.63
	442	0.7	0.8	0.6	1.3	0.2	46.87

	NODE	Vxx	Vyy
	Cent	0.4	0.3
	434	0.6	0.4
	435	0.6	0.3
	443	0.5	0.3
	442	0.5	0.4

LC		NODE	Fxx	Fyy	Fxy	Fmax	Fmin	ANGLE
RC ENV~1	Max	Cent	0.8	1.9	2.1	2.4	0.5	52.43
		434	0.6	2.1	2.1	2.6	0.4	52.43
		435	0.6	1.8	2.1	2.5	0.4	51.82
		443	1.0	1.8	2.1	2.4	0.6	53.62
		442	1.0	2.1	2.1	2.5	0.6	54.21

Min	Cent	-3.6	0.4	-1.2	0.4	-4.0	-85.76
	434	-2.8	0.3	-1.2	0.4	-3.2	-84.52
	435	-2.8	0.5	-1.2	0.5	-3.2	-84.91
	443	-4.4	0.5	-1.2	0.5	-4.7	-86.54
	442	-4.4	0.3	-1.2	0.4	-4.7	-86.37

	NODE	Mxx	Myy	Mxy	Mmax	Mmin	ANGLE
Max	Cent	1.7	4.0	1.5	4.3	0.8	60.78
	434	3.6	3.0	1.6	4.9	1.5	38.53
	435	0.0	3.0	1.3	3.2	-0.6	67.34
	443	-0.8	4.0	1.3	4.1	-1.1	87.26
	442	3.9	6.3	1.5	6.5	2.7	80.52
Min	Cent	-6.1	1.2	-0.3	1.2	-6.1	-88.78
	434	-5.0	1.2	-0.1	1.2	-5.0	82.83
	435	-6.9	0.5	-0.4	0.5	-6.9	89.49
	443	-7.8	0.9	-0.6	0.9	-7.8	-88.20
	442	-5.4	1.7	-0.2	1.7	-5.4	-89.35

	NODE	Vxx	Vyy
Max	Cent	9.9	-0.5
	434	8.9	-0.7
	435	8.9	-0.2
	443	10.9	-0.2
	442	10.9	-0.7
Min	Cent	3.1	-4.9
	434	3.1	-6.5
	435	3.1	-3.4
	443	3.1	-3.4
	442	3.1	-6.5

LC		NODE	Fxx	Fyy	Fxy	Fmax	Fmin	ANGLE
RC ENV~2	Max	Cent	0.2	1.4	1.0	1.7	0.2	76.27
		434	0.2	1.5	1.0	1.8	0.2	74.75
		435	0.2	1.3	1.0	1.6	0.2	74.03
		443	0.3	1.3	1.0	1.5	0.3	77.53
		442	0.3	1.5	1.0	1.7	0.3	77.99
	Min	Cent	-2.5	0.6	-0.0	0.6	-2.8	-88.37
		434	-1.9	0.6	-0.0	0.6	-2.2	-88.46
		435	-1.9	0.6	-0.0	0.6	-2.3	-88.71
		443	-3.1	0.6	-0.0	0.6	-3.3	-88.26
		442	-3.1	0.6	-0.0	0.6	-3.3	-87.78

	NODE	Mxx	Myy	Mxy	Mmax	Mmin	ANGLE
Max	Cent	-1.2	3.0	0.8	3.1	-1.3	82.39
	434	0.7	2.3	1.0	2.7	0.3	64.31
	435	-2.7	2.0	0.6	2.0	-2.8	82.96
	443	-3.5	3.0	0.6	3.0	-3.6	86.82
	442	0.8	4.7	0.9	4.8	0.6	80.11
Min	Cent	-3.9	1.7	-0.1	1.7	-3.9	-89.74
	434	-2.4	1.6	0.1	1.6	-2.4	88.41
	435	-5.0	1.1	-0.2	1.1	-5.0	-88.29
	443	-5.7	1.4	-0.3	1.4	-5.7	-88.44
	442	-2.6	2.4	-0.0	2.4	-2.6	89.63

	NODE	Vxx	Vyy
Max	Cent	7.3	-1.1
	434	6.6	-1.5
	435	6.6	-0.7
	443	8.0	-0.7
	442	8.0	-1.5
Min	Cent	4.3	-3.5
	434	4.1	-4.6
	435	4.1	-2.4
	443	4.5	-2.4
	442	4.5	-4.6

ELEM	MAT	SEC	LC		NODE	Fxx	Fyy	Fxy	Fmax	Fmin	ANGLE
393	1	1	SX (RS)		Cent	1.5	0.2	0.5	1.7	0.1	19.96
					435	1.2	0.3	0.5	1.5	0.1	23.97
					436	1.2	0.2	0.5	1.5	-0.0	22.07
					444	1.7	0.2	0.5	1.9	0.0	17.02

```
                    443        1.7        0.3        0.5        1.9        0.1       18.24

                   NODE        Mxx        Myy        Mxy       Mmax       Mmin      ANGLE
             ---- ------ ---------- ---------- ---------- ---------- ---------- ----------
                   Cent        2.9        1.0        0.7        3.1        0.7      17.71
                    435        3.3        0.9        0.7        3.5        0.7      15.46
                    436        2.5        0.7        0.7        2.7        0.5      19.29
                    444        2.4        1.0        0.6        2.7        0.8      20.59
                    443        3.4        1.4        0.7        3.6        1.2      16.34

                   NODE        Vxx        Vyy
             ---- ------ ---------- ----------
                   Cent        1.9        0.8
                    435        1.8        1.0
                    436        1.8        0.7
                    444        2.0        0.7
                    443        2.0        1.0


        LC         NODE        Fxx        Fyy        Fxy       Fmax       Fmin      ANGLE
-------- ---- ------ ---------- ---------- ---------- ---------- ---------- ----------
      SY (RS)   Cent        0.6        0.2        1.5        1.9       -1.1      41.09
                    435        0.6        0.1        1.5        1.9       -1.1      40.83
                    436        0.6        0.3        1.5        1.9       -1.0      42.29
                    444        0.7        0.3        1.5        2.0       -1.0      41.48
                    443        0.7        0.1        1.5        1.9       -1.1      40.03

                   NODE        Mxx        Myy        Mxy       Mmax       Mmin      ANGLE
             ---- ------ ---------- ---------- ---------- ---------- ---------- ----------
                   Cent        0.5        1.2        0.5        1.5        0.2      60.69
                    435        0.6        1.2        0.5        1.5        0.3      61.06
                    436        0.6        1.3        0.5        1.6        0.3      61.44
                    444        0.5        1.2        0.5        1.5        0.2      60.89
                    443        0.4        1.0        0.5        1.3        0.1      58.94

                   NODE        Vxx        Vyy
             ---- ------ ---------- ----------
                   Cent        0.2        0.3
                    435        0.2        0.3
                    436        0.2        0.2
                    444        0.3        0.2
                    443        0.3        0.3


        LC         NODE        Fxx        Fyy        Fxy       Fmax       Fmin      ANGLE
-------- ---- ------ ---------- ---------- ---------- ---------- ---------- ----------
RC ENV~1  Max   Cent        0.7        1.9        1.8        2.3        0.3      54.28
                    435        0.6        1.9        1.8        2.3        0.3      53.19
                    436        0.6        1.8        1.8        2.4        0.3      54.06
                    444        0.8        1.8        1.8        2.3        0.3      55.44
                    443        0.8        1.9        1.8        2.2        0.3      54.60
             Min   Cent       -3.0        0.5       -1.2        0.6       -3.2     -85.76
                    435       -2.6        0.5       -1.2        0.5       -2.7     -85.03
                    436       -2.6        0.5       -1.2        0.6       -2.7     -85.22
                    444       -3.4        0.5       -1.2        0.6       -3.6     -86.30
                    443       -3.4        0.5       -1.2        0.5       -3.6     -86.18

                   NODE        Mxx        Myy        Mxy       Mmax       Mmin      ANGLE
             ---- ------ ---------- ---------- ---------- ---------- ---------- ----------
             Max   Cent       -1.5        2.9        0.9        3.0       -1.6      84.10
                    435       -0.1        3.0        1.0        3.1       -0.5      82.12
                    436       -2.4        2.7        0.8        2.7       -2.5      84.98
                    444       -2.9        2.9        0.6        2.9       -2.9     -86.78
                    443       -0.4        4.2        0.9        4.2       -0.6     -89.24
             Min   Cent       -7.9        0.6       -1.1        0.6       -8.0     -86.29
                    435       -6.9        0.5       -0.8        0.5       -6.9     -87.47
                    436       -8.4        0.1       -1.2        0.1       -8.5     -85.62
                    444       -9.3        0.6       -1.3        0.6       -9.4     -85.36
                    443       -7.5        0.9       -1.0        0.9       -7.5     -87.08

                   NODE        Vxx        Vyy
             ---- ------ ---------- ----------
             Max   Cent        4.8       -0.2
                    435        4.5       -0.2
                    436        4.5       -0.1
                    444        5.1       -0.1
                    443        5.1       -0.2
             Min   Cent        0.5       -2.8
                    435        0.5       -3.4
```

		436	0.5	-2.3			
		444	0.5	-2.3			
		443	0.5	-3.4			

LC		NODE	Fxx	Fyy	Fxy	Fmax	Fmin	ANGLE
RC ENV~2	Max	Cent	0.1	1.3	0.6	1.5	0.1	79.72
		435	0.1	1.4	0.6	1.5	0.1	78.89
		436	0.1	1.3	0.6	1.4	0.1	78.65
		444	0.1	1.3	0.6	1.4	0.1	80.44
		443	0.1	1.4	0.6	1.5	0.1	80.61
	Min	Cent	-2.1	0.6	0.1	0.6	-2.2	83.44
		435	-1.8	0.6	0.1	0.6	-1.9	82.98
		436	-1.8	0.6	0.1	0.6	-1.9	83.37
		444	-2.4	0.6	0.1	0.6	-2.5	83.84
		443	-2.4	0.6	0.1	0.6	-2.5	83.50

	NODE	Mxx	Myy	Mxy	Mmax	Mmin	ANGLE
Max	Cent	-3.9	2.2	0.2	2.2	-3.9	-88.90
	435	-2.7	2.0	0.4	2.0	-2.8	86.83
	436	-4.6	1.5	0.1	1.5	-4.6	-87.76
	444	-5.2	2.2	0.1	2.2	-5.2	-87.40
	443	-3.1	3.1	0.3	3.1	-3.1	-89.85
Min	Cent	-5.8	1.1	-0.7	1.1	-5.9	-84.90
	435	-5.0	1.1	-0.5	1.2	-5.0	-85.84
	436	-6.2	0.7	-0.8	0.8	-6.2	-84.35
	444	-6.8	0.9	-0.9	1.0	-6.9	-84.09
	443	-5.5	1.5	-0.6	1.5	-5.5	-86.67

	NODE	Vxx	Vyy
Max	Cent	3.5	-0.6
	435	3.3	-0.7
	436	3.3	-0.5
	444	3.7	-0.5
	443	3.7	-0.7
Min	Cent	1.7	-2.0
	435	1.7	-2.4
	436	1.7	-1.6
	444	1.8	-1.6
	443	1.8	-2.4

ELEM	MAT	SEC	LC		NODE	Fxx	Fyy	Fxy	Fmax	Fmin	ANGLE
394	1	1	SX (RS)		Cent	1.3	0.2	0.5	1.5	0.0	19.47
					436	1.1	0.2	0.5	1.3	0.0	23.25
					437	1.1	0.1	0.5	1.3	-0.0	21.66
					445	1.5	0.1	0.5	1.7	0.0	16.63
					444	1.5	0.2	0.5	1.7	0.1	17.64

	NODE	Mxx	Myy	Mxy	Mmax	Mmin	ANGLE
	Cent	2.1	0.8	0.6	2.4	0.6	21.78
	436	2.4	0.7	0.7	2.7	0.5	18.73
	437	1.9	0.6	0.6	2.1	0.3	22.73
	445	2.0	1.1	0.6	2.3	0.8	26.42
	444	2.5	1.0	0.6	2.7	0.8	19.06

	NODE	Vxx	Vyy
	Cent	2.0	0.9
	436	1.9	0.7
	437	1.9	1.2
	445	2.1	1.2
	444	2.1	0.7

LC		NODE	Fxx	Fyy	Fxy	Fmax	Fmin	ANGLE
SY (RS)		Cent	0.6	0.3	1.4	1.9	-0.9	42.07
		436	0.6	0.3	1.4	1.9	-1.0	41.88
		437	0.6	0.4	1.4	1.9	-0.9	42.62
		445	0.6	0.4	1.4	1.9	-0.9	42.24
		444	0.6	0.3	1.4	1.9	-0.9	41.50

	NODE	Mxx	Myy	Mxy	Mmax	Mmin	ANGLE

	Cent	0.5	1.1	0.6	1.4	0.2	59.57
	436	0.6	1.3	0.5	1.6	0.4	62.29
	437	0.6	1.1	0.5	1.4	0.2	58.55
	445	0.4	1.0	0.6	1.3	-0.0	57.39
	444	0.5	1.2	0.6	1.5	0.1	60.27

	NODE	Vxx	Vyy
	Cent	0.1	0.2
	436	0.1	0.2
	437	0.1	0.2
	445	0.1	0.2
	444	0.1	0.2

LC		NODE	Fxx	Fyy	Fxy	Fmax	Fmin	ANGLE
RC ENV~1	Max	Cent	0.6	1.9	1.6	2.2	0.1	55.47
		436	0.5	1.9	1.6	2.2	0.1	54.49
		437	0.5	1.8	1.6	2.3	0.1	55.03
		445	0.7	1.8	1.6	2.2	0.1	56.39
		444	0.7	1.9	1.6	2.2	0.2	55.88
	Min	Cent	-2.6	0.4	-1.2	0.6	-2.7	-84.65
		436	-2.3	0.5	-1.2	0.6	-2.4	-83.81
		437	-2.3	0.4	-1.2	0.7	-2.4	-84.05
		445	-2.9	0.4	-1.2	0.7	-3.0	-85.29
		444	-2.9	0.5	-1.2	0.6	-3.0	-85.14

	NODE	Mxx	Myy	Mxy	Mmax	Mmin	ANGLE
Max	Cent	-2.8	2.6	0.3	2.7	-2.9	87.97
	436	-2.3	2.7	0.5	2.7	-2.3	87.13
	437	-2.9	2.3	0.2	2.3	-2.9	88.99
	445	-3.2	2.9	0.2	3.2	-3.2	-81.53
	444	-2.7	2.9	0.4	3.0	-2.7	-84.33
Min	Cent	-8.3	0.4	-1.9	0.5	-8.6	-81.90
	436	-8.2	0.1	-1.6	0.2	-8.4	-83.28
	437	-7.6	0.1	-2.1	0.3	-8.1	-80.59
	445	-8.3	0.6	-2.2	0.7	-8.8	-82.69
	444	-9.2	0.6	-1.7	0.7	-9.4	-83.05

	NODE	Vxx	Vyy
Max	Cent	2.0	-0.0
	436	1.9	-0.1
	437	1.9	0.1
	445	2.1	0.1
	444	2.1	-0.1
Min	Cent	-2.1	-2.6
	436	-1.9	-2.3
	437	-1.9	-2.9
	445	-2.2	-2.9
	444	-2.2	-2.3

LC		NODE	Fxx	Fyy	Fxy	Fmax	Fmin	ANGLE
RC ENV~2	Max	Cent	-0.1	1.3	0.4	1.4	-0.1	82.46
		436	0.0	1.4	0.4	1.4	0.0	81.98
		437	0.0	1.3	0.4	1.4	0.0	81.88
		445	-0.1	1.3	0.4	1.4	-0.1	82.89
		444	-0.1	1.4	0.4	1.4	-0.1	82.96
	Min	Cent	-1.8	0.6	0.1	0.6	-1.9	85.60
		436	-1.6	0.6	0.1	0.6	-1.7	84.95
		437	-1.6	0.7	0.1	0.7	-1.7	85.39
		445	-2.0	0.7	0.1	0.7	-2.1	86.10
		444	-2.0	0.6	0.1	0.6	-2.1	85.79

	NODE	Mxx	Myy	Mxy	Mmax	Mmin	ANGLE
Max	Cent	-4.9	1.8	-0.3	1.9	-4.9	-83.19
	436	-4.5	1.5	-0.1	1.6	-4.5	-84.41
	437	-4.7	1.3	-0.4	1.5	-4.7	-80.95
	445	-5.2	2.2	-0.4	2.4	-5.2	-82.32
	444	-5.1	2.2	-0.1	2.3	-5.1	-85.03
Min	Cent	-6.1	0.7	-1.3	0.9	-6.3	-80.81
	436	-6.1	0.7	-1.1	0.9	-6.2	-82.05
	437	-5.6	0.4	-1.4	0.6	-5.9	-79.13

445	-6.2	0.9	-1.5	1.1	-6.5	-79.86
444	-6.8	0.9	-1.1	1.1	-6.9	-82.21

	NODE	Vxx	Vyy
Max	Cent	0.6	-0.8
	436	0.6	-0.5
	437	0.6	-1.1
	445	0.7	-1.1
	444	0.7	-0.5
Min	Cent	-1.0	-1.8
	436	-0.9	-1.6
	437	-0.9	-2.1
	445	-1.1	-2.1
	444	-1.1	-1.6

ELEM	MAT	SEC	LC		NODE	Fxx	Fyy	Fxy	Fmax	Fmin	ANGLE
395	1	1	SX (RS)		Cent	1.3	0.1	0.4	1.4	0.0	17.09
					437	1.0	0.2	0.4	1.2	0.0	22.69
					438	1.0	0.1	0.4	1.1	-0.0	21.72
					446	1.7	0.1	0.4	1.8	0.0	13.70
					445	1.7	0.2	0.4	1.8	0.1	14.13

	NODE	Mxx	Myy	Mxy	Mmax	Mmin	ANGLE
	Cent	2.0	0.8	0.6	2.3	0.5	22.69
	437	1.9	0.6	0.6	2.2	0.4	21.22
	438	2.1	0.4	0.6	2.3	0.2	17.32
	446	2.6	1.3	0.7	2.9	1.0	21.96
	445	2.0	1.1	0.7	2.3	0.7	28.69

	NODE	Vxx	Vyy
	Cent	2.5	1.7
	437	2.1	1.2
	438	2.1	2.1
	446	3.0	2.1
	445	3.0	1.2

LC		NODE	Fxx	Fyy	Fxy	Fmax	Fmin	ANGLE
SY (RS)		Cent	0.7	0.5	1.4	2.0	-0.8	42.64
		437	0.8	0.4	1.4	2.0	-0.8	40.70
		438	0.8	0.6	1.4	2.1	-0.7	43.33
		446	0.7	0.6	1.4	2.0	-0.8	44.76
		445	0.7	0.4	1.4	1.9	-0.9	42.11

	NODE	Mxx	Myy	Mxy	Mmax	Mmin	ANGLE
	Cent	0.5	0.8	0.6	1.2	0.1	51.65
	437	0.7	1.1	0.5	1.5	0.4	56.24
	438	0.5	0.7	0.4	1.0	0.2	55.05
	446	0.6	0.7	0.6	1.3	0.0	45.19
	445	0.6	1.0	0.7	1.5	0.0	53.22

	NODE	Vxx	Vyy
	Cent	0.3	0.3
	437	0.9	0.2
	438	0.9	0.6
	446	0.4	0.6
	445	0.4	0.2

LC		NODE	Fxx	Fyy	Fxy	Fmax	Fmin	ANGLE
RC ENV~1	Max	Cent	0.6	1.9	1.5	2.3	0.2	56.10
		437	0.4	1.9	1.5	2.3	0.1	53.73
		438	0.4	1.9	1.5	2.5	0.1	56.00
		446	0.9	1.9	1.5	2.4	0.4	58.44
		445	0.9	1.9	1.5	2.2	0.4	56.34
	Min	Cent	-2.3	0.3	-1.3	0.7	-2.4	-84.35
		437	-2.1	0.4	-1.3	0.6	-2.2	-83.14
		438	-2.1	0.2	-1.3	0.7	-2.2	-83.35
		446	-2.5	0.2	-1.3	0.7	-2.6	-85.17
		445	-2.5	0.4	-1.3	0.6	-2.6	-85.06

	NODE	Mxx	Myy	Mxy	Mmax	Mmin	ANGLE
Max	Cent	-2.2	2.6	-0.3	3.4	-2.2	-74.25
	437	-2.6	2.4	-0.1	2.4	-2.6	-87.75
	438	-1.3	1.8	-0.5	2.9	-1.3	-64.09
	446	-1.1	4.5	-0.4	5.4	-1.2	-71.66
	445	-3.4	2.9	-0.0	3.3	-3.4	-79.09
Min	Cent	-6.3	0.7	-3.0	1.2	-7.4	-76.19
	437	-7.1	0.1	-2.6	0.4	-7.9	-78.08
	438	-5.5	-0.1	-3.3	0.8	-6.2	-72.99
	446	-6.4	1.1	-3.3	1.5	-6.8	-77.63
	445	-8.7	0.6	-2.7	0.8	-9.2	-80.27

	NODE	Vxx	Vyy
Max	Cent	0.1	-0.2
	437	-0.1	0.1
	438	-0.1	-0.5
	446	0.3	-0.5
	445	0.3	0.1
Min	Cent	-6.2	-4.5
	437	-5.5	-2.9
	438	-5.5	-6.2
	446	-6.8	-6.2
	445	-6.8	-2.9

LC		NODE	Fxx	Fyy	Fxy	Fmax	Fmin	ANGLE
RC ENV~2	Max	Cent	-0.2	1.4	0.3	1.4	-0.2	84.51
		437	-0.1	1.4	0.3	1.4	-0.1	84.24
		438	-0.1	1.4	0.3	1.4	-0.1	84.22
		446	-0.3	1.4	0.3	1.4	-0.3	84.75
		445	-0.3	1.4	0.3	1.4	-0.3	84.77
	Min	Cent	-1.6	0.7	-0.0	0.7	-1.7	-89.75
		437	-1.5	0.6	-0.0	0.6	-1.5	-89.70
		438	-1.5	0.7	-0.0	0.7	-1.5	-89.73
		446	-1.8	0.7	-0.0	0.7	-1.8	-89.78
		445	-1.8	0.6	-0.0	0.6	-1.8	-89.76

	NODE	Mxx	Myy	Mxy	Mmax	Mmin	ANGLE
Max	Cent	-4.2	2.0	-0.9	2.5	-4.4	-75.32
	437	-4.5	1.4	-0.7	1.7	-4.6	-76.88
	438	-3.1	1.3	-1.0	2.1	-3.6	-65.79
	446	-3.5	3.3	-1.0	4.0	-3.9	-72.87
	445	-5.3	2.2	-0.7	2.5	-5.4	-79.89
Min	Cent	-4.8	0.7	-2.1	1.2	-5.4	-73.77
	437	-5.3	0.5	-1.8	0.9	-5.8	-75.91
	438	-3.8	0.1	-2.3	0.9	-4.5	-69.36
	446	-4.3	1.5	-2.3	2.0	-4.8	-74.86
	445	-6.5	0.8	-1.8	1.2	-6.8	-77.69

	NODE	Vxx	Vyy
Max	Cent	-2.0	-1.8
	437	-1.8	-1.1
	438	-1.8	-2.4
	446	-2.1	-2.4
	445	-2.1	-1.1
Min	Cent	-4.4	-3.3
	437	-4.0	-2.1
	438	-4.0	-4.5
	446	-4.9	-4.5
	445	-4.9	-2.1

ELEM	MAT	SEC	LC		NODE	Fxx	Fyy	Fxy	Fmax	Fmin	ANGLE
396	1	1	SX (RS)		Cent	1.3	0.5	0.7	1.7	0.1	29.21
					438	0.4	0.2	0.7	1.0	-0.4	39.43
					439	0.4	1.0	0.7	1.4	-0.0	56.06
					447	2.3	1.0	0.7	2.6	0.7	22.90
					446	2.3	0.2	0.7	2.5	-0.0	16.20

	NODE	Mxx	Myy	Mxy	Mmax	Mmin	ANGLE
	Cent	3.1	0.8	0.4	3.1	0.8	9.38

```
                    438        2.4        0.4        0.5        2.5        0.3      13.69
                    439        1.8        1.3        0.5        2.1        1.0      30.71
                    447        5.5        3.1        0.5        5.6        3.0      10.80
                    446        2.8        1.3        0.5        2.9        1.1      16.45

                   NODE        Vxx        Vyy
             ---- ------ ---------- ----------
                   Cent        2.3        4.5
                    438        1.1        2.1
                    439        1.1        6.9
                    447        4.7        6.9
                    446        4.7        2.1


        LC         NODE        Fxx        Fyy        Fxy       Fmax       Fmin      ANGLE
-------- ---- ------ ---------- ---------- ---------- ---------- ---------- ----------
        SY (RS)    Cent        1.0        0.9        2.1        3.0       -1.2      44.20
                    438        0.3        0.6        2.1        2.6       -1.6      46.80
                    439        0.3        2.0        2.1        3.4       -1.1      55.89
                    447        1.7        2.0        2.1        3.9       -0.3      47.39
                    446        1.7        0.6        2.1        3.3       -1.0      37.90

                   NODE        Mxx        Myy        Mxy       Mmax       Mmin      ANGLE
             ---- ------ ---------- ---------- ---------- ---------- ---------- ----------
                   Cent        0.5        1.0        0.2        1.1        0.5      70.85
                    438        0.5        0.7        0.2        0.8        0.4      58.88
                    439        1.0        1.0        0.1        1.2        0.9      49.52
                    447        2.3        3.0        0.5        3.3        2.0      61.91
                    446        1.3        0.7        0.5        1.6        0.4      30.94

                   NODE        Vxx        Vyy
             ---- ------ ---------- ----------
                   Cent        3.5        1.6
                    438        1.9        0.6
                    439        1.9        3.7
                    447        5.1        3.7
                    446        5.1        0.6


        LC         NODE        Fxx        Fyy        Fxy       Fmax       Fmin      ANGLE
-------- ---- ------ ---------- ---------- ---------- ---------- ---------- ----------
RC ENV~1   Max    Cent        0.6        2.1        2.2        3.3        0.1      53.95
                    438       -0.2        1.9        2.2        2.9       -0.2      55.57
                    439       -0.2        2.9        2.2        4.0       -0.2      63.06
                    447        1.6        2.9        2.2        4.3        0.9      57.16
                    446        1.6        1.9        2.2        3.4        0.4      48.10
             Min    Cent       -2.1        0.0       -2.0        0.5       -3.0     -77.01
                    438       -2.1        0.2       -2.0        0.8       -2.4     -72.93
                    439       -2.1       -1.1       -2.0        0.2       -3.0     -65.15
                    447       -3.0       -1.1       -2.0        0.0       -3.8     -79.33
                    446       -3.0        0.2       -2.0        0.7       -3.5     -81.29

                   NODE        Mxx        Myy        Mxy       Mmax       Mmin      ANGLE
             ---- ------ ---------- ---------- ---------- ---------- ---------- ----------
             Max    Cent        1.0        3.0       -1.3        5.9        0.3     -56.06
                    438       -0.4        2.0       -0.9        3.8       -0.7     -59.25
                    439        1.0        1.2       -1.2        4.3       -0.3     -39.43
                    447        5.3        7.2       -1.4       10.6        4.4     -54.35
                    446       -1.3        4.3       -1.1        5.9       -1.6     -68.65
             Min    Cent       -5.1        0.7       -4.5        1.6       -5.8     -72.66
                    438       -5.2        0.1       -3.9        1.1       -5.8     -70.48
                    439       -2.9       -2.2       -4.3        0.2       -5.4     -55.33
                    447       -5.6        0.4       -4.8        1.2       -6.5     -70.90
                    446       -6.9        1.0       -4.4        1.5       -7.6     -75.99

                   NODE        Vxx        Vyy
             ---- ------ ---------- ----------
             Max    Cent       -1.6        0.0
                    438       -1.6       -0.5
                    439       -1.6        0.5
                    447       -1.5        0.5
                    446       -1.5       -0.5
             Min    Cent      -11.6      -10.7
                    438       -7.7       -6.2
                    439       -7.7      -15.3
                    447      -15.5      -15.3
                    446      -15.5       -6.2
```

LC		NODE	Fxx	Fyy	Fxy	Fmax	Fmin	ANGLE
RC ENV~2	Max	Cent	-0.4	1.5	0.3	1.5	-0.4	84.82
		438	-0.2	1.4	0.3	1.4	-0.2	84.60
		439	-0.2	1.6	0.3	1.6	-0.2	84.99
		447	-0.6	1.6	0.3	1.6	-0.6	85.03
		446	-0.6	1.4	0.3	1.4	-0.6	84.65
	Min	Cent	-1.5	0.7	-0.1	0.7	-1.5	-84.55
		438	-1.5	0.7	-0.1	0.7	-1.5	-83.50
		439	-1.5	0.6	-0.1	0.7	-1.5	-83.31
		447	-1.5	0.6	-0.1	0.7	-1.5	-85.31
		446	-1.5	0.7	-0.1	0.7	-1.5	-85.40

		NODE	Mxx	Myy	Mxy	Mmax	Mmin	ANGLE
	Max	Cent	-0.8	2.3	-1.7	4.2	-2.6	-57.57
		438	-2.2	1.4	-1.4	2.7	-3.2	-60.88
		439	0.5	0.0	-1.7	3.0	-2.3	-40.72
		447	2.6	5.3	-1.9	7.6	0.3	-55.84
		446	-4.0	3.2	-1.6	4.3	-4.5	-69.70
	Min	Cent	-2.4	0.8	-3.2	2.1	-3.7	-61.74
		438	-3.1	0.3	-2.8	1.4	-4.1	-65.86
		439	-1.3	-1.4	-3.1	1.1	-3.8	-45.72
		447	-0.8	2.4	-3.4	3.9	-2.2	-63.33
		446	-4.6	1.4	-3.1	2.3	-5.6	-71.16

		NODE	Vxx	Vyy
	Max	Cent	-5.0	-4.1
		438	-3.5	-2.4
		439	-3.5	-5.8
		447	-6.4	-5.8
		446	-6.4	-2.4
	Min	Cent	-8.4	-7.7
		438	-5.6	-4.5
		439	-5.6	-11.0
		447	-11.2	-11.0
		446	-11.2	-4.5

ELEM	MAT	SEC	LC		NODE	Fxx	Fyy	Fxy	Fmax	Fmin	ANGLE
397	1	1	SX (RS)		Cent	0.3	0.3	0.4	0.7	-0.1	44.89
					439	0.5	0.7	0.4	1.0	0.1	52.45
					440	0.5	0.1	0.4	0.7	-0.2	32.13
					448	1.0	0.1	0.4	1.2	-0.1	20.39
					447	1.0	0.7	0.4	1.3	0.4	33.84

	NODE	Mxx	Myy	Mxy	Mmax	Mmin	ANGLE
	Cent	0.3	0.2	1.4	1.6	-1.1	43.71
	439	1.6	1.3	1.8	3.3	-0.4	42.88
	440	2.0	0.4	0.5	2.1	0.3	15.98
	448	9.1	1.8	0.4	9.1	1.8	3.26
	447	6.2	3.2	1.7	7.0	2.4	24.66

	NODE	Vxx	Vyy
	Cent	12.7	3.4
	439	0.9	6.9
	440	0.9	0.0
	448	25.6	0.0
	447	25.6	6.9

LC		NODE	Fxx	Fyy	Fxy	Fmax	Fmin	ANGLE
SY (RS)		Cent	0.5	2.9	1.3	3.5	-0.1	66.11
		439	0.2	1.7	1.3	2.5	-0.6	59.76
		440	0.2	4.1	1.3	4.5	-0.2	72.81
		448	1.0	4.1	1.3	4.6	0.5	69.72
		447	1.0	1.7	1.3	2.7	-0.0	52.66

	NODE	Mxx	Myy	Mxy	Mmax	Mmin	ANGLE
	Cent	1.8	2.1	0.5	2.5	1.4	52.88
	439	1.5	1.1	0.3	1.7	0.9	28.80
	440	1.8	0.8	0.5	2.0	0.6	23.45
	448	5.2	5.4	0.4	5.7	4.9	49.67

	447	1.4	2.3	0.2	2.3	1.3	75.50

	NODE	Vxx	Vyy
	Cent	5.8	6.8
	439	0.9	3.7
	440	0.9	9.8
	448	10.7	9.8
	447	10.7	3.7

LC		NODE	Fxx	Fyy	Fxy	Fmax	Fmin	ANGLE
RC ENV~1	Max	Cent	-0.2	3.8	1.4	4.3	-0.4	72.95
		439	-0.2	2.6	1.4	3.1	-0.3	68.94
		440	-0.2	5.1	1.4	5.4	-0.3	76.71
		448	0.2	5.1	1.4	5.4	0.0	75.28
		447	0.2	2.6	1.4	3.2	0.1	65.65
	Min	Cent	-2.3	-2.0	-1.3	-0.3	-2.9	-36.78
		439	-2.0	-0.8	-1.3	0.3	-2.1	-75.48
		440	-2.0	-3.1	-1.3	-0.3	-3.7	-24.28
		448	-2.6	-3.1	-1.3	-1.0	-3.9	-31.25
		447	-2.6	-0.8	-1.3	0.1	-2.7	-55.31

	NODE	Mxx	Myy	Mxy	Mmax	Mmin	ANGLE
Max	Cent	6.0	3.5	0.0	8.0	2.3	-30.73
	439	2.1	1.4	0.4	4.6	0.7	-35.01
	440	3.8	-0.3	-0.2	4.3	-0.3	-13.30
	448	13.1	8.4	-0.8	14.1	7.8	-19.90
	447	7.2	7.7	-0.2	11.6	6.9	-48.93
Min	Cent	-0.8	-0.7	-3.4	1.1	-2.6	-46.00
	439	-2.1	-2.0	-3.7	0.2	-4.9	-53.61
	440	-1.8	-4.3	-2.0	-0.6	-4.8	-39.93
	448	-5.6	-2.3	-3.0	-0.5	-6.0	-40.19
	447	-5.3	0.5	-4.8	2.2	-7.0	-64.17

	NODE	Vxx	Vyy
Max	Cent	9.4	0.2
	439	-0.8	0.5
	440	-0.8	3.0
	448	20.9	3.0
	447	20.9	0.5
Min	Cent	-15.9	-15.3
	439	-4.0	-15.3
	440	-4.0	-16.6
	448	-30.3	-16.6
	447	-30.3	-15.3

LC		NODE	Fxx	Fyy	Fxy	Fmax	Fmin	ANGLE
RC ENV~2	Max	Cent	-0.3	1.6	0.2	1.6	-0.3	87.62
		439	-0.4	1.6	0.2	1.6	-0.4	87.44
		440	-0.4	1.6	0.2	1.6	-0.4	87.46
		448	-0.3	1.6	0.2	1.6	-0.3	87.78
		447	-0.3	1.6	0.2	1.6	-0.3	87.76
	Min	Cent	-1.6	0.8	-0.1	0.8	-1.6	-86.34
		439	-1.4	0.7	-0.1	0.7	-1.4	-86.12
		440	-1.4	0.9	-0.1	0.9	-1.4	-86.85
		448	-1.8	0.9	-0.1	0.9	-1.9	-86.55
		447	-1.8	0.7	-0.1	0.7	-1.9	-85.64

	NODE	Mxx	Myy	Mxy	Mmax	Mmin	ANGLE
Max	Cent	4.1	1.8	-1.3	5.6	0.3	-32.08
	439	1.3	0.2	-1.4	3.2	-1.6	-36.31
	440	2.6	-1.1	-0.7	2.9	-1.4	-13.62
	448	9.2	4.8	-1.2	9.9	4.0	-20.90
	447	4.4	5.7	-1.9	8.3	1.8	-50.58
Min	Cent	0.9	0.2	-2.4	2.4	-1.4	-42.91
	439	-0.6	-1.2	-2.6	0.9	-2.9	-41.88
	440	0.0	-3.0	-1.4	0.4	-3.3	-19.78
	448	1.9	1.6	-2.1	3.6	0.2	-45.25
	447	0.4	2.7	-3.4	4.5	-1.3	-58.21

	NODE	Vxx	Vyy

Max	Cent	-1.3	-6.5	
	439	-1.7	-5.8	
	440	-1.7	-6.8	
	448	-0.7	-6.8	
	447	-0.7	-5.8	
Min	Cent	-6.5	-11.0	
	439	-2.9	-11.0	
	440	-2.9	-11.5	
	448	-10.7	-11.5	
	447	-10.7	-11.0	

ELEM	MAT	SEC	LC		NODE	Fxx	Fyy	Fxy	Fmax	Fmin	ANGLE
398	1	1	SX (RS)		Cent	6.0	0.9	3.1	7.4	-0.5	25.33
					154	0.5	1.2	3.1	3.9	-2.3	48.20
					441	0.5	1.1	3.1	3.9	-2.3	48.09
					449	11.9	1.1	3.1	12.7	0.3	14.87
					8	11.9	1.2	3.1	12.7	0.4	14.89

	NODE	Mxx	Myy	Mxy	Mmax	Mmin	ANGLE
	Cent	12.3	3.2	2.6	13.0	2.5	14.95
	154	4.3	1.2	8.1	10.9	-5.5	39.52
	441	7.0	0.7	1.4	7.2	0.4	11.68
	449	7.8	4.9	1.7	8.6	4.2	24.97
	8	38.7	7.9	7.6	40.5	6.1	13.17

	NODE	Vxx	Vyy
	Cent	17.4	4.3
	154	19.6	0.6
	441	19.6	8.3
	449	54.4	8.3
	8	54.4	0.6

LC		NODE	Fxx	Fyy	Fxy	Fmax	Fmin	ANGLE
SY (RS)		Cent	1.8	4.9	4.3	7.9	-1.2	54.85
		154	0.6	11.3	4.3	12.8	-0.9	70.64
		441	0.6	1.5	4.3	5.3	-3.3	47.95
		449	3.7	1.5	4.3	7.0	-1.8	37.71
		8	3.7	11.3	4.3	13.2	1.8	65.73

	NODE	Mxx	Myy	Mxy	Mmax	Mmin	ANGLE
	Cent	2.6	4.9	2.0	6.0	1.5	60.15
	154	3.1	3.1	1.6	4.6	1.5	44.67
	441	1.4	1.2	0.7	2.0	0.6	41.28
	449	1.7	6.0	5.2	9.5	-1.8	56.31
	8	9.1	21.9	5.1	23.7	7.4	70.70

	NODE	Vxx	Vyy
	Cent	4.6	11.4
	154	7.2	35.9
	441	7.2	13.2
	449	12.0	13.2
	8	12.0	35.9

LC		NODE	Fxx	Fyy	Fxy	Fmax	Fmin	ANGLE
RC ENV~1	Max	Cent	3.3	5.8	5.5	8.9	0.2	60.44
		154	0.3	12.0	5.5	14.2	-0.4	68.37
		441	0.3	2.6	5.5	7.0	-0.5	50.32
		449	6.8	2.6	5.5	9.4	0.3	30.58
		8	6.8	12.0	5.5	14.0	1.1	70.32
	Min	Cent	-11.3	-4.1	-3.1	-1.2	-13.3	-47.14
		154	-0.8	-10.5	-3.1	0.0	-11.4	-16.17
		441	-0.8	-0.5	-3.1	0.7	-4.7	-68.37
		449	-22.0	-0.5	-3.1	-0.0	-23.2	-83.80
		8	-22.0	-10.5	-3.1	-6.5	-23.3	-37.19

		NODE	Mxx	Myy	Mxy	Mmax	Mmin	ANGLE
	Max	Cent	27.6	16.9	3.1	27.7	16.8	-5.63
		154	9.7	5.0	5.9	13.1	4.8	-39.66

		441	14.1	9.3	4.4	16.5	6.6	31.09
		449	10.2	17.1	7.1	18.6	7.6	70.48
		8	84.4	40.2	5.2	86.5	38.1	-12.06
	Min	Cent	-1.2	3.0	-2.2	5.4	-1.9	-71.55
		154	1.1	-1.2	-10.3	4.7	-9.4	-32.77
		441	-1.4	3.8	0.7	4.4	-1.5	83.09
		449	-5.4	1.4	-3.3	2.5	-5.4	88.65
		8	-7.5	-4.7	-10.0	13.9	-12.2	-64.92

		NODE	Vxx	Vyy
	Max	Cent	59.0	-1.2
		154	20.3	16.6
		441	20.3	7.3
		449	130.6	7.3
		8	130.6	16.6
	Min	Cent	7.0	-31.2
		154	-18.9	-55.2
		441	-18.9	-19.1
		449	-6.3	-19.1
		8	-6.3	-55.2

LC		NODE	Fxx	Fyy	Fxy	Fmax	Fmin	ANGLE
RC ENV~2	Max	Cent	1.4	1.4	3.8	2.7	0.1	70.00
		154	-0.2	1.2	3.8	4.1	-0.3	49.25
		441	-0.2	1.9	3.8	4.7	-0.3	53.09
		449	3.1	1.9	3.8	3.4	0.3	-16.87
		8	3.1	1.2	3.8	3.5	0.7	-21.51
	Min	Cent	-7.9	0.7	-0.9	0.8	-9.3	-83.62
		154	-0.5	0.7	-0.9	1.1	-3.7	-85.11
		441	-0.5	0.3	-0.9	0.5	-3.3	-81.70
		449	-15.4	0.3	-0.9	0.5	-16.2	-80.89
		8	-15.4	0.7	-0.9	1.0	-16.2	79.74

		NODE	Mxx	Myy	Mxy	Mmax	Mmin	ANGLE
	Max	Cent	19.9	12.3	0.9	19.9	12.2	-4.73
		154	7.0	2.2	0.6	9.5	2.1	-39.01
		441	10.1	6.8	3.2	12.0	4.8	31.88
		449	5.6	12.4	3.0	13.5	4.4	70.37
		8	60.3	29.0	0.3	61.8	27.5	-11.87
	Min	Cent	5.7	6.1	-0.7	6.9	4.9	51.29
		154	4.0	1.0	-6.8	6.2	-4.3	-20.52
		441	2.5	4.5	1.0	4.9	2.1	67.53
		449	-0.8	5.0	0.7	5.1	-0.8	83.53
		8	14.0	12.7	-6.9	14.1	12.6	13.99

		NODE	Vxx	Vyy
	Max	Cent	42.5	-9.9
		154	8.8	-17.5
		441	8.8	-2.3
		449	93.2	-2.3
		8	93.2	-17.5
	Min	Cent	16.3	-22.4
		154	-9.0	-32.1
		441	-9.0	-12.6
		449	23.7	-12.6
		8	23.7	-32.1

ELEM	MAT	SEC	LC		NODE	Fxx	Fyy	Fxy	Fmax	Fmin	ANGLE
399	1	1	SX (RS)		Cent	3.4	1.1	0.7	3.6	0.9	15.06
					441	2.9	1.6	0.7	3.2	1.3	23.19
					442	2.9	0.6	0.7	3.1	0.4	15.45
					450	4.0	0.6	0.7	4.1	0.5	11.00
					449	4.0	1.6	0.7	4.1	1.4	14.82

		NODE	Mxx	Myy	Mxy	Mmax	Mmin	ANGLE
		Cent	5.7	2.4	0.8	5.9	2.3	12.21
		441	6.4	0.7	0.8	6.5	0.6	7.60
		442	4.8	2.2	0.7	5.0	2.0	13.80
		450	3.9	2.2	0.6	4.1	2.0	18.15
		449	7.8	5.0	0.7	8.0	4.8	13.25

	NODE	Vxx	Vyy
	Cent	4.8	4.4
	441	3.5	8.3
	442	3.5	0.4
	450	6.0	0.4
	449	6.0	8.3

LC		NODE	Fxx	Fyy	Fxy	Fmax	Fmin	ANGLE
SY (RS)		Cent	1.2	0.5	1.9	2.7	-1.1	40.15
		441	1.2	1.4	1.9	3.2	-0.5	46.68
		442	1.2	0.4	1.9	2.7	-1.1	38.99
		450	1.3	0.4	1.9	2.8	-1.1	38.63
		449	1.3	1.4	1.9	3.2	-0.5	46.30

	NODE	Mxx	Myy	Mxy	Mmax	Mmin	ANGLE
	Cent	0.8	1.5	0.8	2.1	0.2	55.82
	441	1.4	1.5	1.1	2.5	0.4	46.62
	442	1.1	0.9	1.0	2.0	-0.0	42.26
	450	0.4	0.4	0.5	0.9	-0.1	44.17
	449	1.7	6.1	0.5	6.1	1.6	83.11

	NODE	Vxx	Vyy
	Cent	1.7	6.2
	441	3.0	13.2
	442	3.0	1.0
	450	1.3	1.0
	449	1.3	13.2

LC		NODE	Fxx	Fyy	Fxy	Fmax	Fmin	ANGLE
RC ENV~1	Max	Cent	1.8	2.8	2.2	3.0	0.9	81.88
		441	1.5	3.5	2.2	3.8	0.9	60.81
		442	1.5	2.2	2.2	2.9	0.5	54.17
		450	2.0	2.2	2.2	2.8	0.7	37.71
		449	2.0	3.5	2.2	3.7	1.3	62.86
	Min	Cent	-6.7	-0.1	-1.5	-0.1	-6.9	-86.54
		441	-5.7	-0.4	-1.5	-0.4	-5.9	-85.50
		442	-5.7	0.3	-1.5	0.3	-5.9	-86.20
		450	-7.8	0.3	-1.5	0.3	-8.0	-87.18
		449	-7.8	-0.4	-1.5	-0.4	-7.9	-86.81

	NODE	Mxx	Myy	Mxy	Mmax	Mmin	ANGLE
Max	Cent	7.4	10.8	1.6	11.0	6.0	79.58
	441	12.1	8.8	2.1	12.8	7.9	22.41
	442	3.9	7.6	1.8	7.7	3.1	82.57
	450	2.0	8.4	0.9	8.4	1.8	-89.39
	449	13.2	18.3	1.3	18.4	13.0	83.02
Min	Cent	-4.0	2.7	-0.3	2.7	-4.0	-89.85
	441	-1.6	3.3	0.0	3.4	-1.7	26.58
	442	-5.8	1.6	-0.3	1.6	-5.8	89.50
	450	-5.8	1.8	-1.0	1.8	-5.8	-87.32
	449	-2.9	1.9	-0.5	3.0	-2.9	-88.93

	NODE	Vxx	Vyy
Max	Cent	22.1	2.7
	441	20.4	7.3
	442	20.4	0.1
	450	23.8	0.1
	449	23.8	7.3
Min	Cent	5.6	-10.2
	441	6.4	-19.1
	442	6.4	-2.6
	450	4.7	-2.6
	449	4.7	-19.1

LC		NODE	Fxx	Fyy	Fxy	Fmax	Fmin	ANGLE
RC ENV~2	Max	Cent	0.7	2.0	1.0	2.1	0.3	81.89
		441	0.6	2.5	1.0	2.6	0.1	81.42
		442	0.6	1.6	1.0	1.7	0.4	80.31

		450	0.8	1.6	1.0	1.7	0.5	82.19
		449	0.8	2.5	1.0	2.6	0.1	82.95
	Min	Cent	-4.7	0.3	-0.1	0.6	-4.8	85.96
		441	-4.0	0.1	-0.1	0.5	-4.1	88.24
		442	-4.0	0.5	-0.1	0.7	-4.1	86.16
		450	-5.4	0.5	-0.1	0.7	-5.6	86.47
		449	-5.4	0.1	-0.1	0.5	-5.6	88.17

	NODE	Mxx	Myy	Mxy	Mmax	Mmin	ANGLE
Max	Cent	4.4	7.9	0.9	8.0	4.1	78.97
	441	8.7	6.5	1.4	9.3	5.8	24.29
	442	0.6	5.6	0.9	5.7	0.4	82.08
	450	-1.0	6.1	0.3	6.1	-1.0	-89.99
	449	9.4	13.2	0.7	13.3	9.3	82.11
Min	Cent	-0.7	3.8	-0.1	3.8	-0.7	89.71
	441	2.0	4.4	0.4	4.4	1.9	80.76
	442	-2.9	2.6	0.0	2.6	-2.9	88.80
	450	-3.7	2.8	-0.6	2.8	-3.7	-86.54
	449	1.6	5.5	-0.2	5.5	1.5	-88.61

	NODE	Vxx	Vyy
Max	Cent	16.0	-1.4
	441	14.9	-2.3
	442	14.9	-0.6
	450	17.2	-0.6
	449	17.2	-2.3
Min	Cent	8.1	-7.2
	441	8.2	-12.6
	442	8.2	-1.8
	450	8.0	-1.8
	449	8.0	-12.6

ELEM	MAT	SEC	LC		NODE	Fxx	Fyy	Fxy	Fmax	Fmin	ANGLE
400	1	1	SX (RS)		Cent	2.3	0.6	0.4	2.4	0.5	12.14
					442	2.1	0.8	0.4	2.2	0.7	15.09
					443	2.1	0.4	0.4	2.2	0.3	12.07
					451	2.5	0.4	0.4	2.6	0.3	10.13
					450	2.5	0.8	0.4	2.6	0.7	12.23

	NODE	Mxx	Myy	Mxy	Mmax	Mmin	ANGLE
	Cent	4.0	1.8	0.6	4.1	1.7	13.79
	442	4.7	2.1	0.7	4.9	2.0	14.04
	443	3.3	1.3	0.6	3.4	1.1	15.90
	451	3.2	1.5	0.4	3.3	1.4	13.84
	450	4.6	2.3	0.5	4.7	2.2	11.99

	NODE	Vxx	Vyy
	Cent	2.3	0.5
	442	2.4	0.4
	443	2.4	0.6
	451	2.3	0.6
	450	2.3	0.4

LC		NODE	Fxx	Fyy	Fxy	Fmax	Fmin	ANGLE
SY (RS)		Cent	0.8	0.2	1.7	2.2	-1.2	40.11
		442	0.8	0.4	1.7	2.3	-1.1	41.60
		443	0.8	0.2	1.7	2.2	-1.2	39.57
		451	0.8	0.2	1.7	2.2	-1.2	39.44
		450	0.8	0.4	1.7	2.3	-1.1	41.47

	NODE	Mxx	Myy	Mxy	Mmax	Mmin	ANGLE
	Cent	0.5	0.9	0.7	1.4	-0.0	53.27
	442	0.8	0.9	0.7	1.5	0.1	47.02
	443	0.6	1.2	0.6	1.6	0.3	58.42
	451	0.3	1.4	0.7	1.7	-0.0	62.69
	450	0.5	0.4	0.9	1.3	-0.4	42.29

	NODE	Vxx	Vyy
	Cent	0.4	0.3

		442	0.5	1.0
		443	0.5	0.5
		451	0.4	0.5
		450	0.4	1.0

LC		NODE	Fxx	Fyy	Fxy	Fmax	Fmin	ANGLE
RC ENV~1	Max	Cent	1.1	2.3	1.9	2.4	0.6	56.13
		442	1.0	2.5	1.9	2.6	0.7	84.08
		443	1.0	2.1	1.9	2.4	0.6	54.61
		451	1.2	2.1	1.9	2.3	0.7	55.94
		450	1.2	2.5	1.9	2.6	0.8	84.67
	Min	Cent	-4.7	0.3	-1.4	0.3	-4.8	-87.69
		442	-4.3	0.2	-1.4	0.2	-4.4	-87.39
		443	-4.3	0.4	-1.4	0.5	-4.4	-87.59
		451	-5.1	0.4	-1.4	0.5	-5.2	-87.92
		450	-5.1	0.2	-1.4	0.2	-5.2	-87.77

	NODE	Mxx	Myy	Mxy	Mmax	Mmin	ANGLE
Max	Cent	1.5	6.6	1.0	6.6	1.3	-89.11
	442	4.1	7.7	1.2	7.7	3.5	86.54
	443	-0.7	4.6	1.0	4.6	-0.9	89.71
	451	-1.1	5.2	0.8	5.3	-1.2	-86.47
	450	3.7	9.0	1.1	9.0	3.6	-87.56
Min	Cent	-6.4	1.5	-1.0	1.5	-6.4	-87.90
	442	-5.4	1.6	-0.6	1.6	-5.4	-88.38
	443	-7.7	1.2	-0.8	1.2	-7.7	-88.09
	451	-8.3	1.1	-1.4	1.1	-8.4	-87.32
	450	-5.5	1.9	-1.1	1.9	-5.5	-87.55

	NODE	Vxx	Vyy
Max	Cent	11.1	-0.2
	442	10.9	0.1
	443	10.9	0.1
	451	11.2	0.1
	450	11.2	0.1
Min	Cent	3.2	-2.1
	442	3.1	-2.6
	443	3.1	-1.6
	451	3.3	-1.6
	450	3.3	-2.6

LC		NODE	Fxx	Fyy	Fxy	Fmax	Fmin	ANGLE
RC ENV~2	Max	Cent	0.3	1.7	0.5	1.7	0.3	84.18
		442	0.3	1.8	0.5	1.9	0.3	84.06
		443	0.3	1.5	0.5	1.6	0.3	83.64
		451	0.3	1.5	0.5	1.6	0.3	84.31
		450	0.3	1.8	0.5	1.9	0.3	84.64
	Min	Cent	-3.3	0.5	0.0	0.5	-3.4	84.59
		442	-3.0	0.5	0.0	0.5	-3.1	83.12
		443	-3.0	0.6	0.0	0.6	-3.1	85.85
		451	-3.6	0.6	0.0	0.6	-3.6	85.55
		450	-3.6	0.5	0.0	0.5	-3.6	82.26

	NODE	Mxx	Myy	Mxy	Mmax	Mmin	ANGLE
Max	Cent	-1.5	4.9	0.3	4.9	-1.5	-89.80
	442	1.0	5.6	0.6	5.7	0.9	85.85
	443	-3.5	3.4	0.4	3.4	-3.5	89.16
	451	-4.0	3.9	0.1	3.9	-4.0	-87.12
	450	0.6	6.5	0.2	6.5	0.6	-88.38
Min	Cent	-4.2	2.2	-0.6	2.2	-4.2	-86.88
	442	-2.6	2.6	-0.3	2.6	-2.6	-88.06
	443	-5.6	1.7	-0.5	1.7	-5.6	-87.46
	451	-6.1	1.7	-0.9	1.7	-6.1	-85.93
	450	-2.8	2.9	-0.7	2.9	-2.8	-86.10

	NODE	Vxx	Vyy
Max	Cent	8.1	-0.4
	442	8.0	-0.6
	443	8.0	-0.2
	451	8.2	-0.2
	450	8.2	-0.6

Min	Cent	4.6	-1.5	
	442	4.5	-1.8	
	443	4.5	-1.1	
	451	4.6	-1.1	
	450	4.6	-1.8	

ELEM	MAT	SEC	LC		NODE	Fxx	Fyy	Fxy	Fmax	Fmin	ANGLE
401	1	1	SX	(RS)	Cent	1.8	0.4	0.4	1.9	0.3	14.73
					443	1.7	0.5	0.4	1.8	0.4	17.38
					444	1.7	0.2	0.4	1.8	0.1	14.58
					452	1.9	0.2	0.4	2.0	0.1	12.83
					451	1.9	0.5	0.4	2.0	0.4	15.01

	NODE	Mxx	Myy	Mxy	Mmax	Mmin	ANGLE
	Cent	2.9	1.2	0.5	3.0	1.1	14.01
	443	3.4	1.3	0.5	3.5	1.2	13.48
	444	2.4	1.0	0.5	2.6	0.9	17.65
	452	2.5	1.2	0.4	2.5	1.1	14.52
	451	3.5	1.6	0.4	3.6	1.5	11.21

	NODE	Vxx	Vyy
	Cent	2.1	0.4
	443	2.0	0.6
	444	2.0	0.3
	452	2.1	0.3
	451	2.1	0.6

LC		NODE	Fxx	Fyy	Fxy	Fmax	Fmin	ANGLE
SY	(RS)	Cent	0.6	0.2	1.5	1.9	-1.1	41.26
		443	0.7	0.2	1.5	2.0	-1.1	40.55
		444	0.7	0.3	1.5	2.0	-1.1	41.26
		452	0.6	0.3	1.5	1.9	-1.1	41.98
		451	0.6	0.2	1.5	1.9	-1.1	41.27

	NODE	Mxx	Myy	Mxy	Mmax	Mmin	ANGLE
	Cent	0.4	1.2	0.6	1.5	0.1	63.81
	443	0.5	1.2	0.6	1.5	0.2	61.15
	444	0.5	1.3	0.6	1.6	0.2	62.39
	452	0.2	1.1	0.6	1.4	-0.0	64.55
	451	0.4	1.4	0.5	1.6	0.2	65.48

	NODE	Vxx	Vyy
	Cent	0.3	0.2
	443	0.3	0.5
	444	0.3	0.2
	452	0.3	0.2
	451	0.3	0.5

LC		NODE	Fxx	Fyy	Fxy	Fmax	Fmin	ANGLE
RC ENV~1	Max	Cent	0.8	2.1	1.7	2.2	0.4	56.78
		443	0.8	2.3	1.7	2.3	0.4	84.78
		444	0.8	2.0	1.7	2.2	0.3	55.93
		452	0.8	2.0	1.7	2.2	0.3	57.70
		451	0.8	2.3	1.7	2.3	0.5	85.23
	Min	Cent	-3.7	0.5	-1.3	0.5	-3.7	-86.26
		443	-3.4	0.4	-1.3	0.4	-3.4	-85.86
		444	-3.4	0.6	-1.3	0.6	-3.4	-86.14
		452	-3.9	0.6	-1.3	0.6	-4.0	-86.57
		451	-3.9	0.4	-1.3	0.4	-4.0	-86.35

	NODE	Mxx	Myy	Mxy	Mmax	Mmin	ANGLE
Max	Cent	-1.7	4.4	0.6	4.4	-1.7	-86.10
	443	-0.3	4.7	0.7	4.7	-0.4	-87.14
	444	-2.8	3.5	0.6	3.5	-2.9	-86.27
	452	-3.1	3.8	0.4	3.9	-3.1	-85.18
	451	-0.4	5.5	0.5	5.5	-0.5	-85.85
Min	Cent	-8.4	1.1	-1.5	1.1	-8.5	-86.97
	443	-7.4	1.2	-1.2	1.2	-7.5	-87.04

444	-9.2	0.7	-1.5	0.7	-9.3	-84.83
452	-9.7	0.9	-1.7	0.9	-9.8	-86.89
451	-7.8	1.1	-1.5	1.1	-7.9	-87.32

	NODE	Vxx	Vyy
Max	Cent	5.2	0.1
	443	5.1	0.1
	444	5.1	0.1
	452	5.4	0.1
	451	5.4	0.1
Min	Cent	0.5	-1.3
	443	0.5	-1.6
	444	0.5	-0.9
	452	0.5	-0.9
	451	0.5	-1.6

LC		NODE	Fxx	Fyy	Fxy	Fmax	Fmin	ANGLE
RC ENV~2	Max	Cent	0.1	1.5	0.4	1.6	0.0	84.85
		443	0.1	1.6	0.4	1.7	0.1	84.74
		444	0.1	1.4	0.4	1.5	0.1	84.47
		452	0.0	1.4	0.4	1.5	0.0	84.96
		451	0.0	1.6	0.4	1.7	0.0	85.19
	Min	Cent	-2.6	0.6	0.1	0.6	-2.6	83.74
		443	-2.4	0.5	0.1	0.5	-2.4	82.68
		444	-2.4	0.6	0.1	0.7	-2.4	84.10
		452	-2.8	0.6	0.1	0.7	-2.8	84.54
		451	-2.8	0.5	0.1	0.5	-2.8	83.34

	NODE	Mxx	Myy	Mxy	Mmax	Mmin	ANGLE
Max	Cent	-4.3	3.2	0.0	3.3	-4.3	-86.78
	443	-3.0	3.5	0.2	3.5	-3.0	-87.84
	444	-5.1	2.6	0.0	2.6	-5.1	-86.92
	452	-5.4	2.9	-0.1	2.9	-5.5	-85.85
	451	-3.3	4.0	0.0	4.0	-3.3	-86.57
Min	Cent	-6.2	1.5	-0.9	1.6	-6.3	-85.28
	443	-5.4	1.7	-0.8	1.7	-5.4	-85.80
	444	-6.8	1.2	-0.9	1.3	-6.8	-83.62
	452	-7.1	1.2	-1.1	1.3	-7.2	-82.81
	451	-5.7	1.7	-0.9	1.8	-5.7	-85.30

	NODE	Vxx	Vyy
Max	Cent	3.8	-0.1
	443	3.7	-0.2
	444	3.7	-0.1
	452	3.9	-0.1
	451	3.9	-0.2
Min	Cent	1.8	-0.9
	443	1.8	-1.1
	444	1.8	-0.7
	452	1.8	-0.7
	451	1.8	-1.1

ELEM	MAT	SEC	LC		NODE	Fxx	Fyy	Fxy	Fmax	Fmin	ANGLE
402	1	1	SX (RS)		Cent	1.6	0.2	0.4	1.7	0.1	15.48
					444	1.5	0.3	0.4	1.7	0.2	17.42
					445	1.5	0.2	0.4	1.6	0.1	16.36
					453	1.7	0.2	0.4	1.9	0.1	14.39
					452	1.7	0.3	0.4	1.9	0.2	15.23

	NODE	Mxx	Myy	Mxy	Mmax	Mmin	ANGLE
	Cent	2.2	1.1	0.4	2.3	1.0	17.18
	444	2.5	1.0	0.5	2.7	0.9	16.04
	445	2.0	1.0	0.4	2.2	0.8	21.14
	453	2.1	1.4	0.3	2.2	1.3	18.56
	452	2.6	1.2	0.3	2.7	1.1	12.06

	NODE	Vxx	Vyy
	Cent	2.2	0.5
	444	2.1	0.3
	445	2.1	0.7

453	2.3	0.7				
452	2.3	0.3				

LC		NODE	Fxx	Fyy	Fxy	Fmax	Fmin	ANGLE
SY (RS)		Cent	0.5	0.4	1.4	1.8	-1.0	43.18
		444	0.6	0.3	1.4	1.9	-1.0	41.35
		445	0.6	0.4	1.4	1.9	-0.9	42.85
		453	0.4	0.4	1.4	1.8	-1.0	44.98
		452	0.4	0.3	1.4	1.8	-1.1	43.47

		NODE	Mxx	Myy	Mxy	Mmax	Mmin	ANGLE
		Cent	0.3	1.3	0.7	1.6	0.0	63.03
		444	0.5	1.3	0.6	1.6	0.1	61.22
		445	0.4	1.1	0.7	1.6	-0.0	58.11
		453	0.2	1.7	0.7	1.9	-0.0	68.55
		452	0.3	1.1	0.6	1.4	0.0	62.85

		NODE	Vxx	Vyy
		Cent	0.1	0.6
		444	0.1	0.2
		445	0.1	1.3
		453	0.2	1.3
		452	0.2	0.2

LC		NODE	Fxx	Fyy	Fxy	Fmax	Fmin	ANGLE
RC ENV~1	Max	Cent	0.7	2.0	1.5	2.1	0.3	58.39
		444	0.7	2.1	1.5	2.2	0.3	56.57
		445	0.7	1.9	1.5	2.2	0.3	57.49
		453	0.8	1.9	1.5	2.1	0.3	60.08
		452	0.8	2.1	1.5	2.1	0.4	86.01
	Min	Cent	-3.1	0.5	-1.3	0.6	-3.1	-85.00
		444	-2.9	0.5	-1.3	0.6	-2.9	-84.57
		445	-2.9	0.4	-1.3	0.6	-2.9	-84.70
		453	-3.3	0.4	-1.3	0.6	-3.3	-85.27
		452	-3.3	0.5	-1.3	0.6	-3.3	-85.17

		NODE	Mxx	Myy	Mxy	Mmax	Mmin	ANGLE
	Max	Cent	-3.1	3.8	0.4	4.0	-3.1	-83.73
		444	-2.7	3.5	0.4	3.7	-2.7	-84.01
		445	-3.2	3.7	0.4	3.9	-3.2	-82.62
		453	-3.3	4.2	0.3	4.4	-3.3	-83.51
		452	-2.9	3.9	0.4	4.0	-2.9	-84.76
	Min	Cent	-8.9	0.8	-1.9	0.9	-9.1	-81.92
		444	-9.1	0.7	-1.8	0.8	-9.3	-82.44
		445	-8.2	1.0	-2.1	1.1	-8.6	-80.69
		453	-8.7	0.6	-2.0	0.7	-9.1	-81.29
		452	-9.7	0.9	-1.8	0.9	-9.8	-86.86

		NODE	Vxx	Vyy
	Max	Cent	2.2	0.3
		444	2.1	0.1
		445	2.1	0.9
		453	2.3	0.9
		452	2.3	0.1
	Min	Cent	-2.3	-1.1
		444	-2.2	-0.9
		445	-2.2	-1.7
		453	-2.3	-1.7
		452	-2.3	-0.9

LC		NODE	Fxx	Fyy	Fxy	Fmax	Fmin	ANGLE
RC ENV~2	Max	Cent	-0.2	1.5	0.3	1.5	-0.2	85.76
		444	-0.1	1.5	0.3	1.5	-0.1	85.66
		445	-0.1	1.4	0.3	1.4	-0.1	85.52
		453	-0.2	1.4	0.3	1.4	-0.2	85.86
		452	-0.2	1.5	0.3	1.5	-0.2	85.98
	Min	Cent	-2.2	0.7	0.1	0.7	-2.2	85.99
		444	-2.0	0.6	0.1	0.6	-2.0	85.46
		445	-2.0	0.7	0.1	0.7	-2.0	85.98

453	-2.3	0.7	0.1	0.7	-2.3	86.41
452	-2.3	0.6	0.1	0.6	-2.3	86.01

	NODE	Mxx	Myy	Mxy	Mmax	Mmin	ANGLE
Max	Cent	-5.2	2.9	-0.2	3.0	-5.3	-84.44
	444	-5.0	2.6	-0.2	2.7	-5.0	-84.73
	445	-5.1	2.8	-0.3	2.9	-5.1	-83.37
	453	-5.4	3.1	-0.3	3.2	-5.4	-84.22
	452	-5.3	2.9	-0.2	3.0	-5.4	-85.44
Min	Cent	-6.6	1.2	-1.3	1.4	-6.7	-81.40
	444	-6.7	1.2	-1.2	1.4	-6.9	-81.86
	445	-6.1	1.2	-1.4	1.4	-6.4	-80.46
	453	-6.5	1.3	-1.3	1.5	-6.7	-81.03
	452	-7.2	1.2	-1.2	1.3	-7.2	-82.28

	NODE	Vxx	Vyy
Max	Cent	0.7	-0.2
	444	0.7	-0.1
	445	0.7	-0.3
	453	0.7	-0.3
	452	0.7	-0.1
Min	Cent	-1.1	-0.8
	444	-1.1	-0.7
	445	-1.1	-0.9
	453	-1.1	-0.9
	452	-1.1	-0.7

ELEM	MAT	SEC	LC	NODE	Fxx	Fyy	Fxy	Fmax	Fmin	ANGLE
403	1	1	SX (RS)	Cent	1.8	0.2	0.4	1.9	0.2	13.26
				445	1.7	0.2	0.4	1.8	0.1	14.44
				446	1.7	0.3	0.4	1.8	0.2	15.34
				454	2.0	0.3	0.4	2.1	0.2	12.67
				453	2.0	0.2	0.4	2.1	0.1	12.04

NODE	Mxx	Myy	Mxy	Mmax	Mmin	ANGLE
Cent	2.2	1.6	0.4	2.4	1.4	25.41
445	1.9	1.0	0.5	2.2	0.8	23.28
446	2.8	1.9	0.6	3.0	1.6	26.31
454	2.7	2.2	0.3	2.8	2.0	24.42
453	2.0	1.3	0.3	2.1	1.2	17.76

NODE	Vxx	Vyy
Cent	2.9	0.6
445	3.0	0.7
446	3.0	0.5
454	2.8	0.5
453	2.8	0.7

LC	NODE	Fxx	Fyy	Fxy	Fmax	Fmin	ANGLE
SY (RS)	Cent	0.5	0.3	1.4	1.8	-0.9	42.58
	445	0.7	0.4	1.4	1.9	-0.8	42.09
	446	0.7	0.4	1.4	1.9	-0.8	41.70
	454	0.4	0.4	1.4	1.8	-1.0	45.11
	453	0.4	0.4	1.4	1.8	-1.0	45.51

NODE	Mxx	Myy	Mxy	Mmax	Mmin	ANGLE
Cent	0.4	0.8	1.1	1.7	-0.5	51.47
445	0.6	1.2	0.7	1.7	0.1	55.59
446	0.7	0.8	1.0	1.7	-0.3	46.37
454	0.4	0.7	1.5	2.0	-1.0	48.13
453	0.3	1.6	1.2	2.3	-0.4	59.85

NODE	Vxx	Vyy
Cent	0.3	0.2
445	0.4	1.3
446	0.4	1.5
454	0.3	1.5
453	0.3	1.3

LC		NODE	Fxx	Fyy	Fxy	Fmax	Fmin	ANGLE
RC ENV~1	Max	Cent	1.0	2.0	1.5	2.1	0.5	58.13
		445	0.9	2.0	1.5	2.2	0.5	57.16
		446	0.9	2.0	1.5	2.2	0.5	56.99
		454	1.1	2.0	1.5	2.1	0.6	60.51
		453	1.1	2.0	1.5	2.1	0.6	60.67
	Min	Cent	-2.7	0.5	-1.3	0.6	-2.7	-84.98
		445	-2.5	0.4	-1.3	0.6	-2.5	-84.61
		446	-2.5	0.5	-1.3	0.6	-2.5	-84.46
		454	-2.9	0.5	-1.3	0.5	-2.9	-85.21
		453	-2.9	0.4	-1.3	0.6	-2.9	-85.32

		NODE	Mxx	Myy	Mxy	Mmax	Mmin	ANGLE
	Max	Cent	-2.5	4.9	0.5	5.2	-2.5	-80.41
		445	-3.3	3.6	0.1	4.0	-3.3	-80.33
		446	-0.9	5.3	0.2	6.0	-0.9	-75.09
		454	-1.3	6.6	0.9	7.0	-1.3	-79.68
		453	-3.7	4.1	0.8	4.3	-3.7	-83.28
	Min	Cent	-7.0	1.0	-2.5	1.2	-7.6	-82.76
		445	-8.5	0.9	-2.6	1.1	-9.0	-78.99
		446	-6.4	0.9	-2.9	1.2	-6.7	-79.57
		454	-6.6	1.2	-2.5	1.3	-6.7	-83.58
		453	-9.4	0.5	-2.1	0.9	-9.7	-85.73

		NODE	Vxx	Vyy
	Max	Cent	0.1	-0.2
		445	0.3	0.9
		446	0.3	0.3
		454	-0.0	0.3
		453	-0.0	0.9
	Min	Cent	-7.1	-2.0
		445	-6.8	-1.7
		446	-6.8	-2.8
		454	-7.4	-2.8
		453	-7.4	-1.7

LC		NODE	Fxx	Fyy	Fxy	Fmax	Fmin	ANGLE
RC ENV~2	Max	Cent	-0.4	1.4	0.2	1.5	-0.4	86.54
		445	-0.3	1.5	0.2	1.5	-0.3	86.43
		446	-0.3	1.4	0.2	1.4	-0.3	86.40
		454	-0.4	1.4	0.2	1.4	-0.4	86.64
		453	-0.4	1.5	0.2	1.5	-0.4	86.67
	Min	Cent	-1.9	0.7	0.0	0.7	-1.9	88.43
		445	-1.8	0.7	0.0	0.7	-1.8	88.23
		446	-1.8	0.8	0.0	0.8	-1.8	88.42
		454	-2.0	0.8	0.0	0.8	-2.0	88.59
		453	-2.0	0.7	0.0	0.7	-2.0	88.44

		NODE	Mxx	Myy	Mxy	Mmax	Mmin	ANGLE
	Max	Cent	-4.7	3.6	-0.6	3.9	-4.7	-81.20
		445	-5.2	2.7	-0.6	3.0	-5.3	-81.10
		446	-3.3	3.9	-0.8	4.4	-3.7	-76.23
		454	-3.6	4.9	-0.6	5.2	-3.9	-80.62
		453	-5.7	3.0	-0.4	3.2	-5.7	-83.96
	Min	Cent	-5.3	1.7	-1.7	2.1	-5.6	-78.05
		445	-6.4	1.2	-1.7	1.5	-6.7	-78.46
		446	-4.3	1.9	-2.0	2.3	-4.6	-76.74
		454	-4.6	2.4	-1.7	2.7	-4.8	-79.17
		453	-7.0	1.3	-1.4	1.5	-7.2	-80.72

		NODE	Vxx	Vyy
	Max	Cent	-2.3	-0.7
		445	-2.1	-0.3
		446	-2.1	-1.0
		454	-2.4	-1.0
		453	-2.4	-0.3
	Min	Cent	-5.1	-1.5
		445	-4.9	-0.9
		446	-4.9	-2.1
		454	-5.3	-2.1
		453	-5.3	-0.9

ELEM	MAT	SEC	LC		NODE	Fxx	Fyy	Fxy	Fmax	Fmin	ANGLE
404	1	1	SX	(RS)	Cent	2.6	0.6	0.4	2.7	0.5	9.64
					446	2.1	0.2	0.4	2.2	0.1	10.33
					447	2.1	1.0	0.4	2.2	0.9	16.08
					455	3.1	1.0	0.4	3.2	0.9	9.25
					454	3.1	0.2	0.4	3.2	0.2	6.93

		NODE	Mxx	Myy	Mxy	Mmax	Mmin	ANGLE
		Cent	4.0	2.2	0.6	4.2	2.0	18.00
		446	2.9	1.9	0.5	3.1	1.7	21.81
		447	4.8	0.6	0.6	4.8	0.5	7.61
		455	6.7	5.6	0.6	6.9	5.4	24.01
		454	1.9	2.0	0.5	2.4	1.5	47.52

		NODE	Vxx	Vyy
		Cent	6.3	5.8
		446	4.7	0.5
		447	4.7	11.1
		455	8.0	11.1
		454	8.0	0.5

LC		NODE	Fxx	Fyy	Fxy	Fmax	Fmin	ANGLE
SY	(RS)	Cent	0.7	1.0	1.4	2.3	-0.6	47.33
		446	1.3	0.4	1.4	2.4	-0.6	36.18
		447	1.3	2.1	1.4	3.2	0.2	52.73
		455	0.2	2.1	1.4	2.9	-0.6	62.09
		454	0.2	0.4	1.4	1.7	-1.1	47.42

		NODE	Mxx	Myy	Mxy	Mmax	Mmin	ANGLE
		Cent	0.3	2.0	1.2	2.7	-0.3	62.00
		446	1.3	0.9	1.7	2.8	-0.6	41.03
		447	2.3	3.2	1.7	4.5	1.0	52.39
		455	2.1	10.8	0.2	10.8	2.1	88.60
		454	0.5	0.7	0.2	0.9	0.3	56.73

		NODE	Vxx	Vyy
		Cent	2.3	11.8
		446	5.1	1.5
		447	5.1	25.0
		455	0.5	25.0
		454	0.5	1.5

LC		NODE	Fxx	Fyy	Fxy	Fmax	Fmin	ANGLE
RC ENV~1	Max	Cent	1.8	1.9	1.5	2.6	1.1	61.05
		446	1.4	2.0	1.5	2.5	0.8	51.57
		447	1.4	2.9	1.5	3.6	1.1	63.96
		455	2.2	2.9	1.5	3.4	1.5	70.20
		454	2.2	2.0	1.5	2.4	0.9	18.20
	Min	Cent	-3.4	-0.1	-1.3	0.3	-3.4	-85.62
		446	-2.8	0.4	-1.3	0.7	-2.9	-85.38
		447	-2.8	-1.3	-1.3	-0.3	-3.1	-52.89
		455	-4.0	-1.3	-1.3	-0.1	-4.0	-85.77
		454	-4.0	0.4	-1.3	0.7	-4.0	-86.51

		NODE	Mxx	Myy	Mxy	Mmax	Mmin	ANGLE
	Max	Cent	1.6	8.6	0.0	9.7	1.5	-72.26
		446	-1.1	5.1	0.4	6.3	-1.2	-72.14
		447	4.8	9.7	-0.1	12.0	3.8	-62.92
		455	5.9	17.2	-0.5	17.2	5.8	-86.74
		454	-3.0	6.2	-0.2	6.5	-3.0	-80.91
	Min	Cent	-6.4	2.0	-3.6	2.4	-6.8	-78.04
		446	-6.9	0.8	-3.7	1.2	-7.3	-77.65
		447	-4.7	1.5	-4.7	3.6	-5.3	-58.90
		455	-7.4	-4.4	-3.4	-2.1	-7.8	-30.33
		454	-7.3	1.2	-2.5	1.3	-7.8	-82.38

		NODE	Vxx	Vyy

Max	Cent	-0.2	9.4
	446	-1.5	0.3
	447	-1.5	21.3
	455	1.7	21.3
	454	1.7	0.3
Min	Cent	-15.4	-14.2
	446	-15.5	-2.8
	447	-15.5	-28.7
	455	-15.4	-28.7
	454	-15.4	-2.8

LC		NODE	Fxx	Fyy	Fxy	Fmax	Fmin	ANGLE
RC ENV~2	Max	Cent	-0.7	1.4	0.2	1.4	-0.7	86.57
		446	-0.5	1.5	0.2	1.5	-0.5	86.58
		447	-0.5	1.4	0.2	1.4	-0.5	89.10
		455	-0.8	1.4	0.2	1.4	-0.8	89.19
		454	-0.8	1.5	0.2	1.5	-0.8	86.76
	Min	Cent	-1.6	0.8	-0.0	0.8	-1.6	-89.87
		446	-1.5	0.7	-0.0	0.7	-1.6	-87.91
		447	-1.5	0.7	-0.0	0.7	-1.6	85.10
		455	-1.7	0.7	-0.0	0.7	-1.7	85.31
		454	-1.7	0.7	-0.0	0.7	-1.7	-88.27

		NODE	Mxx	Myy	Mxy	Mmax	Mmin	ANGLE
	Max	Cent	-1.1	6.3	-1.2	7.0	-1.8	-73.39
		446	-3.9	3.8	-1.3	4.6	-4.2	-73.18
		447	2.9	7.2	-1.8	8.7	1.0	-64.05
		455	1.9	10.1	-1.1	10.7	1.4	-75.89
		454	-4.9	4.6	-0.6	4.8	-5.0	-81.68
	Min	Cent	-3.0	3.4	-2.5	4.0	-3.5	-73.70
		446	-4.5	1.9	-2.6	2.5	-5.2	-73.47
		447	-0.4	3.6	-3.3	5.2	-1.5	-61.51
		455	-1.7	5.4	-2.4	5.7	-2.0	-78.82
		454	-5.5	2.3	-1.7	2.5	-5.8	-80.10

		NODE	Vxx	Vyy
	Max	Cent	-5.9	-1.6
		446	-6.4	-1.0
		447	-6.4	-2.1
		455	-5.4	-2.1
		454	-5.4	-1.0
	Min	Cent	-11.1	-4.5
		446	-11.2	-2.1
		447	-11.2	-7.0
		455	-11.0	-7.0
		454	-11.0	-2.1

ELEM	MAT	SEC	LC		NODE	Fxx	Fyy	Fxy	Fmax	Fmin	ANGLE
405	1	1	SX (RS)		Cent	4.8	0.2	2.5	5.9	-0.9	23.84
					447	1.0	0.5	2.5	3.3	-1.7	42.08
					448	1.0	1.0	2.5	3.5	-1.5	44.53
					9	10.6	1.0	2.5	11.2	0.3	13.73
					455	10.6	0.5	2.5	11.2	-0.1	13.23

		NODE	Mxx	Myy	Mxy	Mmax	Mmin	ANGLE
		Cent	12.6	3.2	3.3	13.7	2.2	17.72
		447	5.5	0.4	1.6	5.9	-0.0	15.80
		448	9.1	1.8	10.6	16.6	-5.7	35.52
		9	47.6	9.5	10.0	50.1	7.0	13.89
		455	6.5	5.6	2.1	8.2	3.9	38.68

		NODE	Vxx	Vyy
		Cent	23.3	5.5
		447	25.6	11.1
		448	25.6	0.0
		9	72.2	0.0
		455	72.2	11.1

LC	NODE	Fxx	Fyy	Fxy	Fmax	Fmin	ANGLE

```
-------- ---- ------ ---------- ---------- ---------- ---------- ---------- ----------
      SY (RS)   Cent        0.6        6.1        4.3        8.5       -1.8      61.25
                 447        0.4        2.1        4.3        5.7       -3.2      50.76
                 448        0.4       14.4        4.3       15.6       -0.9      74.10
                   9        1.5       14.4        4.3       15.7        0.2      72.95
                 455        1.5        2.1        4.3        6.2       -2.5      46.95

                NODE        Mxx        Myy        Mxy       Mmax       Mmin      ANGLE
           ---- ------ ---------- ---------- ---------- ---------- ---------- ----------
                Cent        2.4        9.9        3.4       11.2        1.1      68.61
                 447        1.4        2.5        0.7        2.9        1.0      63.75
                 448        5.4        6.3        1.4        7.3        4.4      53.96
                   9        7.4       41.4        8.9       43.6        5.2      76.19
                 455        1.8       10.7        9.5       16.8       -4.3      57.53

                NODE        Vxx        Vyy
           ---- ------ ---------- ----------
                Cent        4.3       20.8
                 447       10.7       25.0
                 448       10.7       66.7
                   9        2.2       66.7
                 455        2.2       25.0


      LC        NODE        Fxx        Fyy        Fxy       Fmax       Fmin      ANGLE
-------- ---- ------ ---------- ---------- ---------- ---------- ---------- ----------
RC ENV~1  Max   Cent        4.0        7.2        4.5        9.3       -0.3      64.73
                 447        0.3        2.9        4.5        6.0       -0.4      55.26
                 448        0.3       15.6        4.5       16.8       -0.4      75.43
                   9        9.8       15.6        4.5       16.9        1.4      74.52
                 455        9.8        2.9        4.5       10.6        0.6      15.99
           Min   Cent       -5.6       -5.1       -4.2        1.2       -7.9     -84.48
                 447       -2.6       -1.3       -4.2        1.0       -5.4     -80.61
                 448       -2.6      -13.1       -4.2        0.2      -14.4     -17.57
                   9      -11.4      -13.1       -4.2       -0.9      -14.5     -19.05
                 455      -11.4       -1.3       -4.2        0.7      -11.9     -78.96

                NODE        Mxx        Myy        Mxy       Mmax       Mmin      ANGLE
           ---- ------ ---------- ---------- ---------- ---------- ---------- ----------
           Max   Cent       16.3       16.9        0.7       20.2       10.1     -47.92
                 447        6.8       10.2       -1.3       15.3        4.6     -50.50
                 448       11.8        5.7        8.4       16.4        5.4      28.83
                   9       62.8       59.5        8.4       64.7       38.9      12.66
                 455        2.0       16.4        7.2       18.8        2.0      71.49
           Min   Cent       -9.0       -2.9       -6.9        5.7      -11.4     -35.79
                 447       -4.3        2.4       -7.0        4.9       -6.1     -54.87
                 448       -6.4       -7.0      -12.7       -0.7      -17.3     -29.44
                   9      -32.3      -23.4      -11.7       11.1      -35.4     -17.03
                 455      -11.0       -5.0      -11.9        1.6      -17.6     -70.74

                NODE        Vxx        Vyy
           ---- ------ ---------- ----------
           Max   Cent        5.5        3.5
                 447       20.9       21.3
                 448       20.9       35.6
                   9       41.2       35.6
                 455       41.2       21.3
           Min   Cent      -42.7      -39.0
                 447      -30.3      -28.7
                 448      -30.3      -97.7
                   9     -103.2      -97.7
                 455     -103.2      -28.7


      LC        NODE        Fxx        Fyy        Fxy       Fmax       Fmin      ANGLE
-------- ---- ------ ---------- ---------- ---------- ---------- ---------- ----------
RC ENV~2  Max   Cent       -0.4        1.8        0.7        1.8       -0.6      81.08
                 447       -0.3        1.3        0.7        1.4       -0.4      81.33
                 448       -0.3        2.2        0.7        2.2       -0.3      83.06
                   9        0.5        2.2        0.7        2.3        0.2      80.82
                 455        0.5        1.3        0.7        1.5       -0.0      77.62
           Min   Cent       -1.8        0.9       -0.4        0.9       -1.8     -85.64
                 447       -1.8        0.7       -0.4        0.7       -1.9     -82.95
                 448       -1.8        1.0       -0.4        1.1       -1.9     -75.80
                   9       -2.5        1.0       -0.4        1.1       -2.5     -83.77
                 455       -2.5        0.7       -0.4        0.7       -2.5     -86.30

                NODE        Mxx        Myy        Mxy       Mmax       Mmin      ANGLE
           ---- ------ ---------- ---------- ---------- ---------- ---------- ----------
```

Max	Cent	9.5	10.8	-2.6	14.5	5.8	-49.40
	447	4.7	7.5	-2.8	11.0	0.8	-51.69
	448	7.9	-0.6	-1.0	9.9	-1.6	-22.45
	9	31.5	29.1	-0.6	32.5	28.1	-28.37
	455	-3.7	9.0	-2.3	10.2	-4.8	-73.55
Min	Cent	2.2	6.2	-4.9	8.5	-0.1	-61.17
	447	0.8	3.9	-5.0	6.4	-1.3	-62.55
	448	1.1	-2.6	-4.9	1.4	-4.2	-16.05
	9	9.2	17.5	-4.1	18.7	7.7	-67.65
	455	-5.7	4.5	-4.2	5.2	-6.5	-76.93

	NODE	Vxx	Vyy
Max	Cent	-15.7	-17.3
	447	-0.7	-2.1
	448	-0.7	-30.8
	9	-22.0	-30.8
	455	-22.0	-2.1
Min	Cent	-30.8	-28.2
	447	-10.7	-7.0
	448	-10.7	-51.1
	9	-56.5	-51.1
	455	-56.5	-7.0

ELEM	MAT	SEC	LC		NODE	Fxx	Fyy	Fxy	Fmax	Fmin	ANGLE
406	1	1	SX	(RS)	Cent	1.0	0.4	1.1	1.8	-0.4	36.81
					130	1.3	0.6	1.1	2.1	-0.1	36.30
					131	1.3	0.2	1.1	1.9	-0.5	30.82
					457	0.7	0.2	1.1	1.5	-0.7	37.59
					456	0.7	0.6	1.1	1.8	-0.4	43.91

	NODE	Mxx	Myy	Mxy	Mmax	Mmin	ANGLE
	Cent	0.9	0.7	0.2	1.0	0.6	30.75
	130	2.2	2.1	0.2	2.3	1.9	35.11
	131	0.4	0.6	0.1	0.6	0.3	57.53
	457	0.4	0.5	0.2	0.6	0.3	49.68
	456	1.4	0.4	0.2	1.5	0.3	12.09

	NODE	Vxx	Vyy
	Cent	3.3	2.3
	130	4.0	4.3
	131	4.0	0.3
	457	2.6	0.3
	456	2.6	4.3

LC		NODE	Fxx	Fyy	Fxy	Fmax	Fmin	ANGLE
SY	(RS)	Cent	1.8	0.5	1.3	2.6	-0.3	30.93
		130	2.0	0.6	1.3	2.8	-0.2	30.97
		131	2.0	0.9	1.3	2.9	0.1	33.88
		457	1.8	0.9	1.3	2.7	-0.0	35.98
		456	1.8	0.6	1.3	2.6	-0.2	32.89

	NODE	Mxx	Myy	Mxy	Mmax	Mmin	ANGLE
	Cent	1.4	1.2	1.7	3.0	-0.3	43.27
	130	3.4	6.7	0.8	6.9	3.2	77.18
	131	1.1	3.0	0.9	3.4	0.8	69.07
	457	1.8	2.5	2.1	4.3	0.0	50.02
	456	1.1	5.6	2.0	6.4	0.4	69.05

	NODE	Vxx	Vyy
	Cent	0.5	10.7
	130	2.1	22.0
	131	2.1	0.5
	457	3.0	0.5
	456	3.0	22.0

LC		NODE	Fxx	Fyy	Fxy	Fmax	Fmin	ANGLE
RC ENV~1	Max	Cent	1.9	0.7	1.4	2.9	-0.0	34.22
		130	2.0	0.8	1.4	3.0	-0.1	33.52

		131	2.0	1.3	1.4	3.1	0.2	38.57
		457	1.9	1.3	1.4	3.1	0.1	39.93
		456	1.9	0.8	1.4	2.9	-0.0	34.74
	Min	Cent	-1.8	-0.2	-1.1	0.4	-2.4	68.26
		130	-2.0	-0.5	-1.1	0.1	-2.6	-57.09
		131	-2.0	-0.5	-1.1	0.1	-2.6	-61.31
		457	-1.7	-0.5	-1.1	0.2	-2.4	-58.59
		456	-1.7	-0.5	-1.1	0.2	-2.4	-59.33

		NODE	Mxx	Myy	Mxy	Mmax	Mmin	ANGLE
	Max	Cent	0.3	5.5	-0.2	6.5	0.3	-68.86
		130	6.0	15.0	-0.7	15.0	6.0	-85.78
		131	-3.6	5.4	-0.4	5.4	-3.6	-87.58
		457	-1.3	4.9	-0.0	4.9	-1.3	-89.85
		456	2.8	8.6	-0.3	8.6	1.9	-87.53
	Min	Cent	-2.5	2.8	-3.6	4.0	-4.3	-70.90
		130	-0.8	1.6	-2.4	2.9	-2.2	-59.14
		131	-7.1	-0.7	-2.1	0.0	-7.5	-70.04
		457	-4.8	-0.1	-4.2	2.3	-7.3	-59.81
		456	-0.7	-2.6	-4.3	3.0	-5.9	-37.66

		NODE	Vxx	Vyy
	Max	Cent	15.2	15.7
		130	18.4	31.4
		131	18.4	1.8
		457	12.0	1.8
		456	12.0	31.4
	Min	Cent	5.5	-5.8
		130	7.0	-12.6
		131	7.0	-0.1
		457	3.7	-0.1
		456	3.7	-12.6

LC		NODE	Fxx	Fyy	Fxy	Fmax	Fmin	ANGLE
RC ENV~2	Max	Cent	0.3	0.5	0.4	0.7	-0.0	40.69
		130	0.4	0.4	0.4	0.6	-0.1	32.02
		131	0.4	0.7	0.4	0.8	0.0	59.04
		457	0.3	0.7	0.4	0.8	0.0	59.32
		456	0.3	0.4	0.4	0.6	-0.0	34.12
	Min	Cent	-0.3	0.1	-0.1	0.3	-0.3	67.25
		130	-0.4	-0.0	-0.1	0.2	-0.4	60.90
		131	-0.4	0.3	-0.1	0.4	-0.4	73.55
		457	-0.2	0.3	-0.1	0.4	-0.2	89.76
		456	-0.2	-0.0	-0.1	0.2	-0.3	56.36

		NODE	Mxx	Myy	Mxy	Mmax	Mmin	ANGLE
	Max	Cent	-0.6	4.2	-1.9	4.9	-1.5	-69.30
		130	3.9	9.8	-1.4	10.2	3.5	-74.71
		131	-4.7	2.4	-1.2	2.7	-4.9	-80.25
		457	-3.0	2.4	-2.1	3.1	-3.7	-71.35
		456	1.9	3.2	-2.3	5.0	-0.5	-47.83
	Min	Cent	-1.5	3.8	-2.3	4.5	-2.3	-71.19
		130	1.9	7.7	-1.8	8.2	1.5	-75.44
		131	-5.3	1.9	-1.5	2.1	-5.6	-78.98
		457	-3.6	1.7	-2.5	2.7	-4.5	-67.43
		456	0.4	2.5	-2.8	4.4	-1.1	-57.88

		NODE	Vxx	Vyy
	Max	Cent	11.2	7.2
		130	13.7	13.2
		131	13.7	1.2
		457	8.8	1.2
		456	8.8	13.2
	Min	Cent	8.4	4.4
		130	10.3	8.2
		131	10.3	0.4
		457	6.5	0.4
		456	6.5	8.2

ELEM	MAT	SEC	LC		NODE	Fxx	Fyy	Fxy	Fmax	Fmin	ANGLE
407	1	1	SX (RS)		Cent	0.4	0.2	0.8	1.1	-0.5	41.84

		131	0.5	0.3	0.8	1.2	-0.4	42.30
		132	0.5	0.1	0.8	1.1	-0.5	39.14
		458	0.3	0.1	0.8	1.0	-0.6	42.27
		457	0.3	0.3	0.8	1.1	-0.5	45.49

	NODE	Mxx	Myy	Mxy	Mmax	Mmin	ANGLE
	Cent	0.7	0.3	0.1	0.7	0.3	10.09
	131	0.3	0.6	0.1	0.6	0.3	72.54
	132	1.3	0.3	0.1	1.3	0.3	6.23
	458	1.3	0.2	0.0	1.3	0.2	1.77
	457	0.5	0.5	0.1	0.6	0.4	45.08

	NODE	Vxx	Vyy
	Cent	2.1	0.3
	131	2.1	0.3
	132	2.1	0.3
	458	2.1	0.3
	457	2.1	0.3

LC		NODE	Fxx	Fyy	Fxy	Fmax	Fmin	ANGLE
SY (RS)		Cent	1.6	0.6	1.1	2.3	-0.1	32.19
		131	1.9	0.9	1.1	2.6	0.2	32.90
		132	1.9	0.4	1.1	2.5	-0.2	28.59
		458	1.4	0.4	1.1	2.1	-0.3	33.74
		457	1.4	0.9	1.1	2.3	-0.0	38.83

	NODE	Mxx	Myy	Mxy	Mmax	Mmin	ANGLE
	Cent	1.0	2.3	1.6	3.4	-0.1	55.72
	131	1.1	3.0	2.0	4.3	-0.1	57.94
	132	1.1	1.4	1.8	3.0	-0.5	47.51
	458	0.9	2.1	1.3	2.9	0.1	57.08
	457	1.2	2.7	1.5	3.6	0.3	58.31

	NODE	Vxx	Vyy
	Cent	1.3	0.6
	131	1.5	0.5
	132	1.5	1.6
	458	1.1	1.6
	457	1.1	0.5

LC		NODE	Fxx	Fyy	Fxy	Fmax	Fmin	ANGLE
RC ENV~1	Max	Cent	1.7	0.9	1.2	2.5	0.1	35.09
		131	2.0	1.3	1.2	2.9	0.4	36.75
		132	2.0	0.6	1.2	2.7	0.2	30.03
		458	1.4	0.6	1.2	2.3	0.0	35.76
		457	1.4	1.3	1.2	2.5	0.2	43.44
	Min	Cent	-1.6	-0.3	-1.1	0.3	-2.2	-60.68
		131	-1.8	-0.5	-1.1	0.1	-2.4	-60.84
		132	-1.8	-0.3	-1.1	0.2	-2.4	76.75
		458	-1.3	-0.3	-1.1	0.2	-2.0	82.77
		457	-1.3	-0.5	-1.1	0.2	-2.1	-55.87

	NODE	Mxx	Myy	Mxy	Mmax	Mmin	ANGLE
Max	Cent	-3.4	4.2	0.3	4.2	-3.4	87.75
	131	-2.2	5.6	0.7	5.7	-2.3	85.00
	132	-4.7	2.6	0.7	2.6	-4.8	84.68
	458	-3.9	3.6	-0.0	3.6	-4.2	-89.77
	457	-1.8	5.1	-0.1	5.1	-1.8	-89.54
Min	Cent	-6.8	-0.3	-2.9	1.0	-7.2	-65.56
	131	-5.0	-0.4	-3.3	1.4	-6.3	-60.70
	132	-9.6	-0.2	-2.8	0.8	-9.8	-70.46
	458	-8.4	-0.5	-2.6	0.5	-8.8	-69.02
	457	-4.6	-0.2	-3.0	1.4	-5.8	-61.50

	NODE	Vxx	Vyy
Max	Cent	7.6	1.1
	131	8.0	1.8
	132	8.0	1.2
	458	7.2	1.2

		457	7.2	1.8
	Min	Cent	1.9	-0.5
		131	2.2	-0.1
		132	2.2	-2.0
		458	1.7	-2.0
		457	1.7	-0.1

LC		NODE	Fxx	Fyy	Fxy	Fmax	Fmin	ANGLE
RC ENV~2	Max	Cent	0.1	0.5	0.2	0.5	0.1	89.24
		131	0.1	0.7	0.2	0.7	0.1	89.42
		132	0.1	0.3	0.2	0.4	0.1	57.13
		458	0.0	0.3	0.2	0.4	0.0	64.95
		457	0.0	0.7	0.2	0.7	0.0	89.53
	Min	Cent	0.0	0.2	-0.1	0.3	-0.0	83.53
		131	0.1	0.3	-0.1	0.3	-0.0	68.04
		132	0.1	0.2	-0.1	0.2	-0.0	73.98
		458	-0.0	0.2	-0.1	0.2	-0.1	80.62
		457	-0.0	0.3	-0.1	0.3	-0.0	71.57

	NODE	Mxx	Myy	Mxy	Mmax	Mmin	ANGLE
Max	Cent	-4.4	2.0	-1.3	2.2	-4.6	-78.96
	131	-3.3	2.7	-1.3	3.0	-3.6	-78.46
	132	-5.9	1.2	-1.0	1.4	-6.1	-82.07
	458	-5.2	1.6	-1.3	1.8	-5.4	-79.45
	457	-2.9	2.4	-1.5	2.8	-3.3	-75.26
Min	Cent	-5.1	1.3	-1.5	1.7	-5.4	-77.26
	131	-3.8	2.2	-1.5	2.6	-4.1	-76.25
	132	-7.2	0.7	-1.2	0.9	-7.3	-81.26
	458	-6.3	0.8	-1.5	1.0	-6.6	-79.42
	457	-3.4	1.7	-1.8	2.3	-3.9	-72.14

	NODE	Vxx	Vyy
Max	Cent	5.6	0.7
	131	5.9	1.2
	132	5.9	0.3
	458	5.3	0.3
	457	5.3	1.2
Min	Cent	3.7	0.0
	131	4.0	0.4
	132	4.0	-0.4
	458	3.4	-0.4
	457	3.4	0.4

ELEM	MAT	SEC	LC		NODE	Fxx	Fyy	Fxy	Fmax	Fmin	ANGLE
408	1	1	SX (RS)		Cent	0.8	0.1	0.7	1.2	-0.3	32.63
					132	0.9	0.2	0.7	1.3	-0.2	31.84
					133	0.9	0.2	0.7	1.3	-0.2	32.20
					459	0.7	0.2	0.7	1.2	-0.3	35.92
					458	0.7	0.2	0.7	1.2	-0.3	35.52

	NODE	Mxx	Myy	Mxy	Mmax	Mmin	ANGLE
	Cent	1.8	0.3	0.2	1.8	0.3	5.72
	132	1.2	0.3	0.1	1.2	0.3	7.95
	133	2.4	0.4	0.2	2.4	0.4	5.80
	459	2.3	0.3	0.2	2.3	0.3	5.35
	458	1.3	0.2	0.1	1.3	0.2	5.71

	NODE	Vxx	Vyy
	Cent	1.9	0.2
	132	2.0	0.3
	133	2.0	0.1
	459	1.8	0.1
	458	1.8	0.3

LC		NODE	Fxx	Fyy	Fxy	Fmax	Fmin	ANGLE
SY (RS)		Cent	1.4	0.4	0.9	1.9	-0.1	30.99
		132	1.6	0.4	0.9	2.1	-0.1	28.41
		133	1.6	0.4	0.9	2.1	-0.1	28.37
		459	1.2	0.4	0.9	1.8	-0.2	33.91

		458	1.2	0.4	0.9	1.8	-0.2	33.96

		NODE	Mxx	Myy	Mxy	Mmax	Mmin	ANGLE
		Cent	0.9	1.8	1.2	2.6	0.1	54.12
		132	1.0	1.4	1.3	2.5	-0.1	48.49
		133	1.2	1.7	1.2	2.7	0.2	50.86
		459	0.8	1.8	1.1	2.6	0.1	57.13
		458	0.8	2.1	1.2	2.9	0.1	59.16

	NODE	Vxx	Vyy
	Cent	0.6	1.0
	132	0.9	1.6
	133	0.9	0.5
	459	0.4	0.5
	458	0.4	1.6

LC		NODE	Fxx	Fyy	Fxy	Fmax	Fmin	ANGLE
RC ENV~1	Max	Cent	1.5	0.6	0.8	2.0	0.1	30.62
		132	1.8	0.6	0.8	2.2	0.2	27.84
		133	1.8	0.6	0.8	2.2	0.1	27.33
		459	1.3	0.6	0.8	1.8	0.0	33.80
		458	1.3	0.6	0.8	1.8	0.1	34.45
	Min	Cent	-1.3	-0.2	-1.0	0.2	-1.9	-86.66
		132	-1.5	-0.2	-1.0	0.1	-2.0	79.97
		133	-1.5	-0.3	-1.0	0.2	-2.0	-86.66
		459	-1.1	-0.3	-1.0	0.2	-1.7	-87.07
		458	-1.1	-0.2	-1.0	0.1	-1.7	79.70

		NODE	Mxx	Myy	Mxy	Mmax	Mmin	ANGLE
	Max	Cent	-3.8	3.1	0.4	3.1	-3.9	87.10
		132	-4.4	2.7	0.4	2.7	-4.4	86.81
		133	-3.8	2.6	0.5	2.6	-3.8	86.10
		459	-3.2	3.3	0.4	3.3	-3.2	87.35
		458	-3.8	3.7	0.3	3.7	-4.0	88.16
	Min	Cent	-9.2	-0.5	-2.1	0.2	-9.3	-72.79
		132	-9.0	-0.1	-2.2	0.6	-9.1	-73.02
		133	-10.5	-0.8	-1.9	-0.3	-10.5	-74.89
		459	-9.3	-0.4	-1.9	0.2	-9.4	-73.52
		458	-8.2	-0.6	-2.2	0.2	-8.4	-70.21

		NODE	Vxx	Vyy
	Max	Cent	2.6	0.4
		132	2.8	1.2
		133	2.8	-0.3
		459	2.4	-0.3
		458	2.4	1.2
	Min	Cent	-1.2	-1.6
		132	-1.1	-2.0
		133	-1.1	-1.3
		459	-1.3	-1.3
		458	-1.3	-2.0

LC		NODE	Fxx	Fyy	Fxy	Fmax	Fmin	ANGLE
RC ENV~2	Max	Cent	0.4	0.3	0.0	0.5	0.1	-36.29
		132	0.4	0.4	0.0	0.6	0.2	-37.39
		133	0.4	0.3	0.0	0.6	0.1	-27.88
		459	0.3	0.3	0.0	0.4	0.0	-35.21
		458	0.3	0.4	0.0	0.5	0.1	-46.52
	Min	Cent	-0.1	0.1	-0.2	0.1	-0.1	-83.66
		132	-0.1	0.1	-0.2	0.1	-0.1	82.50
		133	-0.1	0.1	-0.2	0.2	-0.1	-83.48
		459	-0.1	0.1	-0.2	0.2	-0.1	-84.39
		458	-0.1	0.1	-0.2	0.1	-0.1	82.45

		NODE	Mxx	Myy	Mxy	Mmax	Mmin	ANGLE
	Max	Cent	-5.5	1.3	-0.7	1.4	-5.6	-82.90
		132	-5.5	1.3	-0.8	1.4	-5.6	-82.83
		133	-6.0	0.9	-0.5	1.0	-6.1	-84.20
		459	-5.3	1.4	-0.6	1.5	-5.4	-83.48
		458	-5.1	1.6	-0.9	1.7	-5.2	-81.67

```
                                  Min   Cent       -6.8        0.6       -1.0        0.7       -6.9     -84.38
                                         132       -6.7        0.8       -1.1        0.9       -6.8     -82.63
                                         133       -7.7        0.2       -0.8        0.3       -7.8     -86.15
                                         459       -6.9        0.6       -0.9        0.7       -6.9     -85.28
                                         458       -6.1        0.8       -1.2        0.9       -6.3     -82.48

                                        NODE        Vxx        Vyy
                                  ---- ------ ---------- ----------
                                  Max   Cent        1.6       -0.0
                                         132        1.8        0.3
                                         133        1.8       -0.3
                                         459        1.4       -0.3
                                         458        1.4        0.3
                                  Min   Cent        0.2       -0.6
                                         132        0.4       -0.4
                                         133        0.4       -0.8
                                         459        0.1       -0.8
                                         458        0.1       -0.4


  ELEM   MAT    SEC        LC        NODE        Fxx        Fyy        Fxy       Fmax       Fmin      ANGLE
------ ------ ------ -------- ---- ------ ---------- ---------- ---------- ---------- ---------- ----------
   409      1      1       SX (RS)   Cent        1.4        0.3        0.7        1.7       -0.0      24.43
                                         133        1.6        0.1        0.7        1.8       -0.1      20.98
                                         134        1.6        0.5        0.7        1.9        0.2      24.56
                                         460        1.2        0.5        0.7        1.6        0.1      29.52
                                         459        1.2        0.1        0.7        1.6       -0.2      24.88

                                        NODE        Mxx        Myy        Mxy       Mmax       Mmin      ANGLE
                                  ---- ------ ---------- ---------- ---------- ---------- ---------- ----------
                                         Cent        2.8        0.4        0.3        2.8        0.4       7.70
                                         133        2.3        0.4        0.3        2.3        0.3       8.16
                                         134        3.4        0.6        0.4        3.4        0.6       7.58
                                         460        3.2        0.5        0.4        3.3        0.4       7.51
                                         459        2.3        0.3        0.3        2.3        0.3       8.08

                                        NODE        Vxx        Vyy
                                  ---- ------ ---------- ----------
                                         Cent        1.8        0.2
                                         133        1.8        0.1
                                         134        1.8        0.3
                                         460        1.7        0.3
                                         459        1.7        0.1


                                LC        NODE        Fxx        Fyy        Fxy       Fmax       Fmin      ANGLE
                           -------- ---- ------ ---------- ---------- ---------- ---------- ---------- ----------
                                SY (RS)   Cent        1.1        0.4        0.9        1.8       -0.3      34.66
                                         133        1.3        0.4        0.9        1.9       -0.2      32.12
                                         134        1.3        0.4        0.9        1.9       -0.2      32.27
                                         460        0.9        0.4        0.9        1.6       -0.3      37.40
                                         459        0.9        0.4        0.9        1.6       -0.3      37.24

                                        NODE        Mxx        Myy        Mxy       Mmax       Mmin      ANGLE
                                  ---- ------ ---------- ---------- ---------- ---------- ---------- ----------
                                         Cent        1.0        1.7        1.1        2.5        0.2      54.76
                                         133        1.2        1.7        1.1        2.6        0.3      51.29
                                         134        1.1        1.5        1.1        2.4        0.2      49.58
                                         460        0.8        1.9        1.0        2.5        0.2      59.09
                                         459        0.8        1.9        1.0        2.5        0.1      58.76

                                        NODE        Vxx        Vyy
                                  ---- ------ ---------- ----------
                                         Cent        0.4        0.7
                                         133        0.5        0.5
                                         134        0.5        1.0
                                         460        0.2        1.0
                                         459        0.2        0.5


                                LC        NODE        Fxx        Fyy        Fxy       Fmax       Fmin      ANGLE
                           -------- ---- ------ ---------- ---------- ---------- ---------- ---------- ----------
                           RC ENV~1  Max   Cent        1.6        0.6        0.7        1.8        0.3      18.62
                                         133        1.8        0.6        0.7        1.9        0.2      15.41
                                         134        1.8        0.6        0.7        2.0        0.5      18.39
                                         460        1.4        0.6        0.7        1.6        0.4      23.98
                                         459        1.4        0.6        0.7        1.6        0.2      35.14
                                  Min   Cent       -1.2       -0.2       -1.1        0.3       -1.8     -73.48
                                         133       -1.4       -0.2       -1.1        0.2       -1.9     -84.77
```

		134	-1.4	-0.3	-1.1	0.2	-1.9	-60.88
		460	-1.1	-0.3	-1.1	0.2	-1.7	-56.93
		459	-1.1	-0.2	-1.1	0.2	-1.7	-83.99

	NODE	Mxx	Myy	Mxy	Mmax	Mmin	ANGLE
Max	Cent	-2.2	3.2	0.7	3.2	-2.2	84.62
	133	-3.8	2.6	0.6	2.6	-3.8	85.67
	134	-1.2	3.1	0.8	3.2	-1.2	83.39
	460	-0.7	3.8	0.8	3.9	-0.7	83.51
	459	-3.2	3.3	0.6	3.3	-3.2	85.72
Min	Cent	-9.0	-0.3	-1.5	0.1	-9.0	-76.60
	133	-10.5	-0.8	-1.7	-0.4	-10.5	-76.10
	134	-8.7	0.1	-1.4	0.4	-8.7	-77.14
	460	-7.6	0.1	-1.2	0.3	-7.6	-76.81
	459	-9.4	-0.4	-1.5	-0.1	-9.4	-76.42

	NODE	Vxx	Vyy
Max	Cent	-0.7	0.1
	133	-0.6	-0.3
	134	-0.6	0.6
	460	-0.9	0.6
	459	-0.9	-0.3
Min	Cent	-4.3	-1.3
	133	-4.3	-1.3
	134	-4.3	-1.4
	460	-4.3	-1.4
	459	-4.3	-1.3

LC		NODE	Fxx	Fyy	Fxy	Fmax	Fmin	ANGLE
RC ENV~2	Max	Cent	0.7	0.3	-0.1	0.9	-0.0	-26.06
		133	0.8	0.3	-0.1	1.0	0.0	-26.06
		134	0.8	0.3	-0.1	1.0	-0.0	-22.13
		460	0.6	0.3	-0.1	0.8	-0.0	-26.06
		459	0.6	0.3	-0.1	0.8	-0.0	-31.04
	Min	Cent	-0.3	0.1	-0.4	0.2	-0.3	-69.57
		133	-0.3	0.1	-0.4	0.2	-0.3	-81.45
		134	-0.3	-0.0	-0.4	0.2	-0.3	-71.20
		460	-0.3	-0.0	-0.4	0.2	-0.3	-70.91
		459	-0.3	0.1	-0.4	0.2	-0.3	-80.34

	NODE	Mxx	Myy	Mxy	Mmax	Mmin	ANGLE
Max	Cent	-4.7	1.5	-0.1	1.5	-4.7	-86.43
	133	-6.0	0.9	-0.3	0.9	-6.0	-85.16
	134	-4.0	1.6	-0.0	1.7	-4.1	-85.65
	460	-3.4	2.0	0.1	2.0	-3.4	-87.84
	459	-5.3	1.4	-0.2	1.5	-5.4	-86.12
Min	Cent	-6.7	0.7	-0.5	0.7	-6.7	-89.24
	133	-7.8	0.2	-0.7	0.3	-7.8	-87.54
	134	-6.4	1.0	-0.4	1.0	-6.4	-89.95
	460	-5.6	1.1	-0.3	1.2	-5.6	88.78
	459	-7.0	0.6	-0.6	0.6	-7.0	-88.52

	NODE	Vxx	Vyy
Max	Cent	-2.0	-0.1
	133	-1.9	-0.3
	134	-1.9	0.2
	460	-2.1	0.2
	459	-2.1	-0.3
Min	Cent	-3.2	-0.6
	133	-3.2	-0.8
	134	-3.2	-0.5
	460	-3.2	-0.5
	459	-3.2	-0.8

ELEM	MAT	SEC	LC		NODE	Fxx	Fyy	Fxy	Fmax	Fmin	ANGLE
410	1	1	SX (RS)		Cent	2.2	0.6	0.7	2.5	0.3	20.08
					134	2.5	0.3	0.7	2.7	0.1	16.38
					135	2.5	0.8	0.7	2.8	0.5	19.74
					461	2.0	0.8	0.7	2.3	0.5	25.47
					460	2.0	0.3	0.7	2.2	0.1	20.49

	NODE	Mxx	Myy	Mxy	Mmax	Mmin	ANGLE
	Cent	3.8	0.7	0.5	3.8	0.7	8.94
	134	3.3	0.6	0.5	3.4	0.6	9.62
	135	4.3	1.0	0.5	4.4	0.9	8.77
	461	4.3	0.9	0.5	4.4	0.8	8.52
	460	3.2	0.5	0.4	3.3	0.4	8.99

	NODE	Vxx	Vyy
	Cent	1.7	0.2
	134	1.7	0.3
	135	1.7	0.1
	461	1.8	0.1
	460	1.8	0.3

LC		NODE	Fxx	Fyy	Fxy	Fmax	Fmin	ANGLE
SY (RS)		Cent	0.8	0.4	1.2	1.8	-0.6	39.36
		134	1.0	0.4	1.2	1.9	-0.5	37.85
		135	1.0	0.6	1.2	2.0	-0.4	40.42
		461	0.7	0.6	1.2	1.9	-0.5	44.09
		460	0.7	0.4	1.2	1.8	-0.6	41.43

	NODE	Mxx	Myy	Mxy	Mmax	Mmin	ANGLE
	Cent	0.8	1.9	1.1	2.6	0.1	58.31
	134	1.1	1.5	1.2	2.5	0.1	49.26
	135	1.0	2.3	1.3	3.1	0.2	58.28
	461	0.5	2.1	1.0	2.6	0.0	64.21
	460	0.7	1.9	1.0	2.4	0.1	60.90

	NODE	Vxx	Vyy
	Cent	0.5	0.4
	134	0.6	1.0
	135	0.6	0.3
	461	0.5	0.3
	460	0.5	1.0

LC		NODE	Fxx	Fyy	Fxy	Fmax	Fmin	ANGLE
RC ENV~1	Max	Cent	2.5	0.8	0.9	2.6	0.8	11.90
		134	2.8	0.6	0.9	2.9	0.4	8.80
		135	2.8	1.2	0.9	2.9	1.1	12.17
		461	2.2	1.2	0.9	2.3	1.1	18.04
		460	2.2	0.6	0.9	2.3	0.4	11.69
	Min	Cent	-1.9	-0.3	-1.5	0.2	-2.4	-64.31
		134	-2.2	-0.2	-1.5	0.3	-2.6	-72.74
		135	-2.2	-0.4	-1.5	0.1	-2.7	-65.31
		461	-1.7	-0.4	-1.5	0.2	-2.3	-60.71
		460	-1.7	-0.2	-1.5	0.3	-2.2	-70.85

	NODE	Mxx	Myy	Mxy	Mmax	Mmin	ANGLE
Max	Cent	1.3	4.4	1.3	4.6	1.0	78.13
	134	-2.0	2.9	1.2	3.1	-2.1	80.97
	135	4.4	6.5	1.4	6.8	4.0	76.29
	461	3.4	4.2	1.4	4.6	2.3	74.81
	460	-0.7	3.8	1.2	4.0	-0.8	80.84
Min	Cent	-6.3	0.5	-0.9	0.7	-6.3	-77.70
	134	-9.7	-0.0	-1.2	0.2	-9.7	-79.56
	135	-4.2	1.9	-1.2	2.3	-4.2	-69.99
	461	-5.2	-0.0	-0.7	0.3	-5.2	-68.03
	460	-7.7	0.1	-0.8	0.2	-7.7	-80.99

	NODE	Vxx	Vyy
Max	Cent	-5.3	3.1
	134	-7.1	0.6
	135	-7.1	5.9
	461	-3.5	5.9
	460	-3.5	0.6
Min	Cent	-10.9	1.2
	134	-13.2	-1.4
	135	-13.2	3.3
	461	-8.6	3.3

		460	-8.6	-1.4			

LC		NODE	Fxx	Fyy	Fxy	Fmax	Fmin	ANGLE
RC ENV~2	Max	Cent	1.2	0.5	-0.1	1.4	-0.0	-24.43
		134	1.3	0.3	-0.1	1.5	-0.1	-22.40
		135	1.3	0.7	-0.1	1.5	0.0	-22.78
		461	1.0	0.7	-0.1	1.3	-0.0	-26.75
		460	1.0	0.3	-0.1	1.3	-0.1	-26.26
	Min	Cent	-0.5	0.1	-0.6	0.4	-0.5	-71.95
		134	-0.6	0.1	-0.6	0.2	-0.6	-80.67
		135	-0.6	0.0	-0.6	0.5	-0.6	-75.59
		461	-0.4	0.0	-0.6	0.5	-0.5	-74.72
		460	-0.4	0.1	-0.6	0.3	-0.5	-79.01

	NODE	Mxx	Myy	Mxy	Mmax	Mmin	ANGLE
Max	Cent	-1.7	2.5	0.7	2.5	-1.7	88.03
	134	-4.8	1.5	0.4	1.5	-4.8	-88.61
	135	1.2	4.5	0.6	4.5	1.2	89.80
	461	0.2	2.2	0.9	2.2	0.1	81.81
	460	-3.4	2.0	0.6	2.0	-3.4	88.12
Min	Cent	-4.3	1.8	0.1	1.9	-4.3	83.46
	134	-7.1	0.9	-0.2	0.9	-7.1	87.32
	135	-1.7	3.7	0.0	3.8	-1.7	83.52
	461	-2.7	1.4	0.3	1.6	-2.8	77.81
	460	-5.6	1.1	0.1	1.2	-5.6	84.65

	NODE	Vxx	Vyy
Max	Cent	-6.6	2.3
	134	-8.4	0.2
	135	-8.4	4.4
	461	-4.9	4.4
	460	-4.9	0.2
Min	Cent	-8.2	1.6
	134	-9.9	-0.5
	135	-9.9	3.6
	461	-6.4	3.6
	460	-6.4	-0.5

ELEM	MAT	SEC	LC		NODE	Fxx	Fyy	Fxy	Fmax	Fmin	ANGLE
411	1	1	SX (RS)		Cent	3.5	1.0	1.1	3.9	0.6	21.06
					135	4.2	0.6	1.1	4.5	0.2	15.98
					136	4.2	1.4	1.1	4.6	1.0	19.73
					462	2.8	1.4	1.1	3.4	0.8	29.40
					461	2.8	0.6	1.1	3.3	0.1	22.60

	NODE	Mxx	Myy	Mxy	Mmax	Mmin	ANGLE
	Cent	5.0	1.0	0.6	5.1	0.9	8.32
	135	3.9	0.9	0.6	4.0	0.8	10.07
	136	6.5	2.9	0.6	6.6	2.8	9.65
	462	5.1	0.8	0.7	5.3	0.7	9.46
	461	4.5	1.0	0.7	4.6	0.8	10.33

	NODE	Vxx	Vyy
	Cent	2.9	3.3
	135	4.0	0.1
	136	4.0	6.5
	462	1.8	6.5
	461	1.8	0.1

LC		NODE	Fxx	Fyy	Fxy	Fmax	Fmin	ANGLE
SY (RS)		Cent	0.6	0.5	1.4	1.9	-0.8	43.13
		135	0.9	0.7	1.4	2.2	-0.6	42.17
		136	0.9	0.6	1.4	2.2	-0.6	41.79
		462	0.5	0.6	1.4	1.9	-0.8	46.75
		461	0.5	0.7	1.4	2.0	-0.8	47.13

	NODE	Mxx	Myy	Mxy	Mmax	Mmin	ANGLE
	Cent	0.6	1.4	1.2	2.2	-0.2	55.14

135	1.0	2.3	0.8	2.7	0.6	63.48
136	0.9	2.8	0.8	3.1	0.6	69.78
462	1.3	3.7	1.3	4.3	0.7	66.61
461	0.4	2.1	1.3	2.8	-0.3	61.05

	NODE	Vxx	Vyy
	Cent	0.3	5.6
	135	1.0	0.3
	136	1.0	11.5
	462	1.7	11.5
	461	1.7	0.3

LC		NODE	Fxx	Fyy	Fxy	Fmax	Fmin	ANGLE
RC ENV~1	Max	Cent	4.0	1.2	0.9	4.1	1.1	12.89
		135	4.6	1.1	0.9	4.7	0.9	10.01
		136	4.6	1.4	0.9	4.8	1.3	11.33
		462	3.3	1.4	0.9	3.5	1.2	17.88
		461	3.3	1.1	0.9	3.5	0.8	14.97
	Min	Cent	-3.0	-0.8	-1.8	0.1	-3.9	-62.63
		135	-3.8	-0.2	-1.8	0.5	-4.4	-69.24
		136	-3.8	-1.4	-1.8	-0.6	-4.6	-62.99
		462	-2.3	-1.4	-1.8	-0.2	-3.5	-52.86
		461	-2.3	-0.2	-1.8	0.6	-3.2	-79.75

	NODE	Mxx	Myy	Mxy	Mmax	Mmin	ANGLE
Max	Cent	6.1	5.8	1.3	6.6	4.7	28.87
	135	3.1	6.3	0.7	6.4	3.0	83.53
	136	9.9	11.3	0.9	11.3	9.3	85.52
	462	8.0	7.1	1.8	8.4	3.8	16.24
	461	3.5	4.2	1.7	4.7	2.2	72.30
Min	Cent	-3.9	2.7	-1.0	3.0	-3.9	-69.25
	135	-4.7	1.7	-1.0	2.0	-4.8	-75.46
	136	-3.2	4.1	-0.8	4.2	-3.2	-84.79
	462	-2.2	-0.3	-0.8	1.9	-2.3	-19.75
	461	-5.4	0.0	-0.9	0.5	-5.4	-64.22

	NODE	Vxx	Vyy
Max	Cent	-3.5	10.9
	135	-2.4	5.9
	136	-2.4	18.4
	462	-4.6	18.4
	461	-4.6	5.9
Min	Cent	-11.6	-0.4
	135	-12.1	3.3
	136	-12.1	-4.6
	462	-11.4	-4.6
	461	-11.4	3.3

LC		NODE	Fxx	Fyy	Fxy	Fmax	Fmin	ANGLE
RC ENV~2	Max	Cent	1.9	0.6	-0.1	2.2	-0.1	-21.57
		135	2.1	0.7	-0.1	2.5	-0.0	-22.75
		136	2.1	0.5	-0.1	2.4	-0.3	-17.49
		462	1.6	0.5	-0.1	1.9	-0.2	-20.47
		461	1.6	0.7	-0.1	2.1	-0.0	-27.40
	Min	Cent	-0.9	-0.2	-0.9	0.4	-0.9	-76.38
		135	-1.1	0.2	-0.9	0.5	-1.1	-79.45
		136	-1.1	-0.5	-0.9	0.3	-1.1	-77.70
		462	-0.6	-0.5	-0.9	0.4	-0.9	-71.14
		461	-0.6	0.2	-0.9	0.5	-0.6	-74.77

	NODE	Mxx	Myy	Mxy	Mmax	Mmin	ANGLE
Max	Cent	2.6	4.4	0.8	4.5	2.6	77.24
	135	0.1	4.3	0.3	4.3	0.1	-87.26
	136	5.6	8.5	0.6	8.5	5.5	86.51
	462	4.7	3.7	1.3	5.0	3.0	21.55
	461	0.1	2.2	1.1	2.3	0.1	80.81
Min	Cent	-0.8	3.7	0.2	3.8	-0.8	82.57
	135	-2.6	3.5	-0.2	3.5	-2.6	86.76
	136	1.2	6.0	-0.1	6.0	1.2	88.34
	462	1.3	2.9	0.5	3.6	0.9	65.39
	461	-2.9	1.3	0.3	1.6	-3.0	78.74

	NODE	Vxx	Vyy
Max	Cent	-5.9	7.2
	135	-5.4	4.4
	136	-5.4	10.2
	462	-6.3	10.2
	461	-6.3	4.4
Min	Cent	-8.6	4.1
	135	-8.9	3.6
	136	-8.9	4.4
	462	-8.4	4.4
	461	-8.4	3.6

ELEM	MAT	SEC	LC	NODE	Fxx	Fyy	Fxy	Fmax	Fmin	ANGLE
412	1	1	SX (RS)	Cent	6.1	0.6	3.4	7.7	-1.0	25.72
				136	12.0	0.9	3.4	13.0	-0.0	15.76
				7	12.0	0.4	3.4	13.0	-0.5	15.20
				193	0.2	0.4	3.4	3.7	-3.1	46.02
				462	0.2	0.9	3.4	4.0	-2.9	48.14

	NODE	Mxx	Myy	Mxy	Mmax	Mmin	ANGLE
	Cent	9.1	1.0	2.9	10.0	0.1	17.50
	136	6.9	3.0	0.7	7.0	2.8	10.16
	7	27.4	2.5	6.4	29.0	1.0	13.54
	193	3.6	1.1	7.0	9.5	-4.8	39.91
	462	5.5	0.8	0.7	5.6	0.7	7.91

	NODE	Vxx	Vyy
	Cent	10.6	0.8
	136	37.0	6.5
	7	37.0	5.8
	193	15.8	5.8
	462	15.8	6.5

LC	NODE	Fxx	Fyy	Fxy	Fmax	Fmin	ANGLE
SY (RS)	Cent	0.7	4.4	3.1	6.1	-1.1	60.78
	136	0.9	0.6	3.1	3.8	-2.3	43.78
	7	0.9	9.2	3.1	10.2	-0.1	71.82
	193	0.8	9.2	3.1	10.2	-0.2	71.93
	462	0.8	0.6	3.1	3.8	-2.3	44.12

	NODE	Mxx	Myy	Mxy	Mmax	Mmin	ANGLE
	Cent	1.0	6.4	2.1	7.1	0.3	71.27
	136	0.8	2.7	4.8	6.6	-3.1	50.77
	7	2.5	19.5	4.4	20.5	1.4	76.43
	193	2.4	5.5	0.2	5.5	2.4	87.01
	462	0.6	3.4	0.5	3.4	0.6	80.82

	NODE	Vxx	Vyy
	Cent	0.5	7.8
	136	3.5	11.5
	7	3.5	27.0
	193	4.5	27.0
	462	4.5	11.5

LC		NODE	Fxx	Fyy	Fxy	Fmax	Fmin	ANGLE
RC ENV~1	Max	Cent	6.7	6.4	2.0	7.7	1.8	-37.61
		136	13.6	1.0	2.0	13.9	0.7	8.93
		7	13.6	13.1	2.0	14.0	3.9	11.84
		193	0.6	13.1	2.0	13.3	0.4	82.47
		462	0.6	1.0	2.0	4.2	-0.3	-43.48
	Min	Cent	-5.4	-2.4	-4.8	2.3	-7.9	-84.56
		136	-10.5	-0.9	-4.8	0.3	-12.5	-82.84
		7	-10.5	-5.3	-4.8	3.0	-12.0	-28.09
		193	-1.0	-5.3	-4.8	1.8	-8.1	-32.13
		462	-1.0	-0.9	-4.8	0.5	-5.4	-62.68

	NODE	Mxx	Myy	Mxy	Mmax	Mmin	ANGLE

Max	Cent	14.6	11.0	3.9	16.0	7.1	20.28
	136	8.8	10.8	6.2	13.1	7.1	59.46
	7	37.4	25.6	7.7	39.3	13.9	14.06
	193	10.8	7.3	7.5	14.8	7.1	32.35
	462	9.0	6.8	2.1	9.3	4.0	13.37
Min	Cent	-3.6	-1.9	-1.8	4.0	-4.1	-76.59
	136	-5.0	3.8	-3.3	3.8	-5.1	85.63
	7	-17.5	-13.3	-5.1	4.8	-18.6	-77.19
	193	2.8	-3.6	-6.6	4.1	-4.9	2.17
	462	-2.0	0.1	-0.1	2.7	-2.0	-88.36

	NODE	Vxx	Vyy
Max	Cent	0.4	15.6
	136	22.3	18.4
	7	22.3	33.8
	193	10.1	33.8
	462	10.1	18.4
Min	Cent	-23.1	-0.9
	136	-51.8	-4.6
	7	-51.8	-20.2
	193	-21.6	-20.2
	462	-21.6	-4.6

LC		NODE	Fxx	Fyy	Fxy	Fmax	Fmin	ANGLE
RC ENV~2	Max	Cent	3.2	3.0	-0.0	5.5	-0.1	-39.01
		136	6.6	0.4	-0.0	7.6	-0.6	-20.03
		7	6.6	5.8	-0.0	8.5	2.5	-33.73
		193	-0.1	5.8	-0.0	6.5	-0.2	-67.88
		462	-0.1	0.4	-0.0	2.6	-0.2	-44.73
	Min	Cent	-1.7	1.4	-2.9	1.9	-1.7	-80.82
		136	-3.2	-0.3	-2.9	0.3	-3.2	-75.82
		7	-3.2	3.0	-2.9	3.4	-3.2	-84.94
		193	-0.3	3.0	-2.9	3.4	-1.7	-83.26
		462	-0.3	-0.3	-2.9	0.4	-3.1	-89.37

	NODE	Mxx	Myy	Mxy	Mmax	Mmin	ANGLE
Max	Cent	9.2	5.5	2.5	9.3	5.3	10.80
	136	3.8	8.1	2.6	9.0	3.2	67.79
	7	21.4	9.9	3.8	21.4	9.9	-0.74
	193	8.0	2.3	3.2	9.4	1.8	22.88
	462	5.7	3.8	1.4	6.1	3.1	21.09
Min	Cent	2.7	4.4	0.3	5.8	1.2	41.01
	136	-0.8	5.6	1.1	5.8	-1.2	80.46
	7	1.8	5.9	-0.7	8.6	0.2	64.59
	193	5.8	0.3	-1.6	6.2	0.1	0.07
	462	1.7	3.2	0.5	3.9	1.4	54.76

	NODE	Vxx	Vyy
Max	Cent	-7.5	11.1
	136	-3.7	10.2
	7	-3.7	14.3
	193	-1.2	14.3
	462	-1.2	10.2
Min	Cent	-16.7	6.7
	136	-31.7	4.4
	7	-31.7	6.6
	193	-11.8	6.6
	462	-11.8	4.4

ELEM	MAT	SEC	LC		NODE	Fxx	Fyy	Fxy	Fmax	Fmin	ANGLE
413	1	1	SX	(RS)	Cent	0.3	0.2	1.2	1.4	-1.0	43.50
					408	0.7	0.1	1.2	1.6	-0.8	37.35
					456	0.7	0.4	1.2	1.8	-0.6	41.30
					463	0.1	0.4	1.2	1.5	-0.9	48.32
					416	0.1	0.1	1.2	1.3	-1.1	44.21

	NODE	Mxx	Myy	Mxy	Mmax	Mmin	ANGLE
	Cent	0.2	0.1	0.7	0.9	-0.6	42.54
	408	3.4	0.7	0.4	3.5	0.6	8.67
	456	2.0	1.1	0.8	2.5	0.6	31.17

```
                    463        0.4        0.7        0.9        1.4       -0.4      49.62
                    416        0.8        0.2        0.5        1.1       -0.1      28.93

                   NODE        Vxx        Vyy
             ---- ------ ---------- ----------
                   Cent        4.1        1.3
                    408        9.0        0.0
                    456        9.0        2.6
                    463        0.9        2.6
                    416        0.9        0.0


        LC         NODE        Fxx        Fyy        Fxy       Fmax       Fmin      ANGLE
-------- ---- ------ ---------- ---------- ---------- ---------- ---------- ----------
      SY (RS)   Cent        1.2        3.1        1.1        3.6        0.7      65.35
                    408        1.5        4.1        1.1        4.5        1.1      69.48
                    456        1.5        2.2        1.1        3.0        0.7      53.02
                    463        1.0        2.2        1.1        2.8        0.3      59.38
                    416        1.0        4.1        1.1        4.4        0.6      72.33

                   NODE        Mxx        Myy        Mxy       Mmax       Mmin      ANGLE
             ---- ------ ---------- ---------- ---------- ---------- ---------- ----------
                   Cent        0.8        5.0        0.2        5.0        0.8      87.34
                    408        2.6        7.5        0.2        7.5        2.6      88.20
                    456        2.8        4.8        0.2        4.8        2.7      83.76
                    463        0.8        4.3        0.1        4.3        0.8      88.45
                    416        0.8        3.5        0.3        3.5        0.8      83.14

                   NODE        Vxx        Vyy
             ---- ------ ---------- ----------
                   Cent        4.3        4.5
                    408        8.2        7.1
                    456        8.2        2.0
                    463        0.4        2.0
                    416        0.4        7.1


        LC         NODE        Fxx        Fyy        Fxy       Fmax       Fmin      ANGLE
-------- ---- ------ ---------- ---------- ---------- ---------- ---------- ----------
RC ENV~1  Max   Cent        0.9        4.2        1.4        4.6        0.5      70.90
                    408        1.2        5.3        1.4        5.7        0.9      74.08
                    456        1.2        3.0        1.4        3.7        0.6      62.46
                    463        0.7        3.0        1.4        3.6        0.1      66.16
                    416        0.7        5.3        1.4        5.7        0.3      75.63
           Min   Cent       -1.5       -2.1       -1.0       -0.8       -2.8     -36.72
                    408       -1.8       -2.8       -1.0       -1.3       -3.4     -31.38
                    456       -1.8       -1.3       -1.0       -0.6       -2.6     -52.71
                    463       -1.2       -1.3       -1.0       -0.3       -2.2     -43.50
                    416       -1.2       -2.8       -1.0       -0.8       -3.2     -24.93

                   NODE        Mxx        Myy        Mxy       Mmax       Mmin      ANGLE
             ---- ------ ---------- ---------- ---------- ---------- ---------- ----------
           Max   Cent        3.8        5.9       -0.4        6.2        2.1     -75.86
                    408        8.3       10.1       -0.5       10.2        6.3     -79.09
                    456        5.1        7.8       -0.9        8.4        4.1     -67.37
                    463        1.0        3.8       -0.5        4.2        0.1     -70.55
                    416        2.7        2.1       -0.0        2.7        1.3      -6.44
           Min   Cent        0.7       -4.1       -2.3        1.1       -4.5     -14.56
                    408        0.4       -5.0       -1.8        1.3       -5.2      -9.21
                    456       -0.8       -1.8       -3.3        0.8       -3.3     -38.03
                    463       -1.0       -4.9       -2.7       -0.5       -5.4     -18.85
                    416       -0.2       -4.9       -1.2       -0.0       -5.0      -9.92

                   NODE        Vxx        Vyy
             ---- ------ ---------- ----------
           Max   Cent        6.9       10.8
                    408       12.4       13.3
                    456       12.4       11.0
                    463        3.3       11.0
                    416        3.3       13.3
           Min   Cent       -1.7        1.6
                    408       -5.5       -0.8
                    456       -5.5        3.4
                    463        0.9        3.4
                    416        0.9       -0.8


        LC         NODE        Fxx        Fyy        Fxy       Fmax       Fmin      ANGLE
-------- ---- ------ ---------- ---------- ---------- ---------- ---------- ----------
```

RC ENV~2	Max	Cent	-0.2	1.7	0.4	1.8	-0.3	80.44
		408	-0.2	2.1	0.4	2.2	-0.2	86.57
		456	-0.2	1.4	0.4	1.5	-0.2	79.46
		463	-0.1	1.4	0.4	1.5	-0.2	78.63
		416	-0.1	2.1	0.4	2.2	-0.2	86.74
	Min	Cent	-0.6	1.0	-0.0	1.0	-0.6	84.12
		408	-0.6	1.1	-0.0	1.2	-0.7	80.65
		456	-0.6	0.7	-0.0	0.7	-0.7	88.92
		463	-0.7	0.7	-0.0	0.7	-0.7	89.05
		416	-0.7	1.1	-0.0	1.2	-0.7	79.59

	NODE	Mxx	Myy	Mxy	Mmax	Mmin	ANGLE
Max	Cent	2.8	0.9	-1.1	3.4	0.1	-23.30
	408	6.0	2.8	-0.9	6.3	2.3	-14.92
	456	3.7	3.2	-1.7	5.2	1.3	-37.01
	463	0.7	-0.5	-1.3	1.5	-1.8	-28.42
	416	1.8	-1.4	-0.5	1.9	-1.5	-6.75
Min	Cent	1.5	-0.4	-1.7	2.4	-1.0	-36.60
	408	3.2	1.4	-1.3	3.8	1.1	-30.72
	456	1.4	2.2	-2.4	4.3	-0.3	-53.55
	463	-0.4	-2.3	-2.0	0.8	-3.0	-33.15
	416	0.4	-3.2	-0.8	0.7	-3.3	-17.48

	NODE	Vxx	Vyy
Max	Cent	4.4	8.0
	408	6.7	7.8
	456	6.7	8.1
	463	2.4	8.1
	416	2.4	7.8
Min	Cent	1.6	6.0
	408	1.2	6.2
	456	1.2	5.8
	463	1.8	5.8
	416	1.8	6.2

ELEM	MAT	SEC	LC	NODE	Fxx	Fyy	Fxy	Fmax	Fmin	ANGLE
414	1	1	SX (RS)	Cent	0.3	0.3	1.4	1.6	-1.1	44.49
				456	0.8	0.5	1.4	2.1	-0.7	41.54
				457	0.8	0.1	1.4	1.9	-0.9	37.73
				464	0.3	0.1	1.4	1.6	-1.2	43.68
				463	0.3	0.5	1.4	1.8	-1.0	47.63

	NODE	Mxx	Myy	Mxy	Mmax	Mmin	ANGLE
	Cent	0.7	0.2	0.3	0.8	0.1	25.69
	456	1.7	1.0	0.4	1.9	0.8	24.03
	457	0.4	0.3	0.2	0.6	0.1	41.67
	464	0.6	0.3	0.3	0.8	0.2	30.01
	463	0.6	0.6	0.4	1.0	0.2	47.92

	NODE	Vxx	Vyy
	Cent	1.7	1.7
	456	2.6	2.6
	457	2.6	0.8
	464	0.8	0.8
	463	0.8	2.6

LC	NODE	Fxx	Fyy	Fxy	Fmax	Fmin	ANGLE
SY (RS)	Cent	1.4	1.4	1.8	3.2	-0.5	44.96
	456	1.9	2.4	1.8	4.0	0.3	48.46
	457	1.9	0.5	1.8	3.2	-0.7	34.53
	464	0.9	0.5	1.8	2.6	-1.1	42.09
	463	0.9	2.4	1.8	3.6	-0.3	55.95

	NODE	Mxx	Myy	Mxy	Mmax	Mmin	ANGLE
	Cent	0.9	3.9	0.6	4.0	0.8	78.42
	456	1.1	5.4	1.0	5.6	0.9	77.78
	457	1.8	2.6	1.0	3.3	1.1	56.40
	464	1.0	3.3	0.4	3.4	1.0	79.99
	463	0.7	4.2	0.4	4.3	0.7	84.26

	NODE	Vxx	Vyy
	Cent	1.9	0.5
	456	3.0	2.0
	457	3.0	1.0
	464	0.8	1.0
	463	0.8	2.0

LC		NODE	Fxx	Fyy	Fxy	Fmax	Fmin	ANGLE
RC ENV~1	Max	Cent	1.3	2.0	2.0	3.7	-0.1	49.66
		456	2.1	3.3	2.0	4.8	0.6	53.10
		457	2.1	0.9	2.0	3.6	0.0	37.17
		464	0.7	0.9	2.0	2.9	-0.3	46.63
		463	0.7	3.3	2.0	4.4	-0.3	61.07
	Min	Cent	-1.4	-0.7	-1.6	0.6	-2.7	-50.98
		456	-1.8	-1.5	-1.6	-0.0	-3.2	-47.69
		457	-1.8	-0.1	-1.6	0.5	-2.8	-88.68
		464	-1.1	-0.1	-1.6	0.5	-2.3	-89.01
		463	-1.1	-1.5	-1.6	0.3	-2.9	-41.74

	NODE	Mxx	Myy	Mxy	Mmax	Mmin	ANGLE
Max	Cent	-0.5	5.1	-1.4	5.4	-0.8	-76.57
	456	2.7	8.2	-1.2	8.4	1.7	-79.70
	457	-1.4	4.6	-1.1	4.8	-1.6	-79.93
	464	-1.4	3.9	-1.4	4.3	-1.7	-76.27
	463	0.3	3.6	-1.4	4.1	-0.5	-69.94
Min	Cent	-2.3	-2.7	-3.4	0.2	-5.2	-42.78
	456	-1.0	-2.7	-3.7	1.8	-4.9	-35.01
	457	-4.9	-0.7	-3.4	1.0	-6.6	-62.16
	464	-3.8	-2.7	-3.0	-0.8	-5.4	-50.26
	463	-1.4	-4.9	-3.2	-0.4	-6.0	-25.89

	NODE	Vxx	Vyy
Max	Cent	9.3	8.2
	456	12.0	11.0
	457	12.0	5.3
	464	6.6	5.3
	463	6.6	11.0
Min	Cent	3.3	2.7
	456	3.7	3.4
	457	3.7	1.8
	464	2.8	1.8
	463	2.8	3.4

LC		NODE	Fxx	Fyy	Fxy	Fmax	Fmin	ANGLE
RC ENV~2	Max	Cent	0.1	1.1	0.5	1.3	-0.1	68.86
		456	0.4	1.5	0.5	1.7	0.2	69.53
		457	0.4	0.7	0.5	1.0	0.0	52.58
		464	-0.2	0.7	0.5	0.8	-0.2	68.15
		463	-0.2	1.5	0.5	1.6	-0.2	76.30
	Min	Cent	-0.2	0.6	-0.1	0.6	-0.2	88.24
		456	-0.2	0.8	-0.1	0.8	-0.2	88.46
		457	-0.2	0.3	-0.1	0.4	-0.2	87.10
		464	-0.5	0.3	-0.1	0.4	-0.6	87.96
		463	-0.5	0.8	-0.1	0.8	-0.5	88.74

	NODE	Mxx	Myy	Mxy	Mmax	Mmin	ANGLE
Max	Cent	-0.9	1.2	-2.0	2.3	-2.5	-61.23
	456	1.9	2.9	-2.1	4.6	-0.2	-49.90
	457	-3.1	2.0	-2.1	2.7	-3.9	-70.22
	464	-2.2	0.7	-1.8	1.5	-3.2	-65.37
	463	0.1	-0.6	-1.8	1.4	-2.5	-33.24
Min	Cent	-1.7	0.1	-2.5	2.0	-3.2	-50.77
	456	0.3	1.9	-2.7	4.1	-1.4	-55.98
	457	-3.7	1.1	-2.6	2.2	-4.7	-66.17
	464	-2.8	-0.6	-2.2	0.7	-4.0	-55.92
	463	-0.9	-2.4	-2.4	1.0	-3.6	-39.17

	NODE	Vxx	Vyy
Max	Cent	6.8	6.0
	456	8.8	8.1

		457	8.8	3.9	
		464	4.8	3.9	
		463	4.8	8.1	
	Min	Cent	5.1	4.3	
		456	6.5	5.8	
		457	6.5	2.8	
		464	3.6	2.8	
		463	3.6	5.8	

ELEM	MAT	SEC	LC		NODE	Fxx	Fyy	Fxy	Fmax	Fmin	ANGLE
415	1	1	SX	(RS)	Cent	0.2	0.1	1.0	1.2	-0.9	44.38
					457	0.3	0.2	1.0	1.2	-0.8	43.19
					458	0.3	0.2	1.0	1.3	-0.8	43.55
					465	0.2	0.2	1.0	1.2	-0.8	44.40
					464	0.2	0.2	1.0	1.2	-0.8	44.04

	NODE	Mxx	Myy	Mxy	Mmax	Mmin	ANGLE
	Cent	0.8	0.3	0.1	0.9	0.3	8.98
	457	0.4	0.3	0.1	0.5	0.2	33.61
	458	1.3	0.4	0.0	1.3	0.3	1.90
	465	1.3	0.3	0.1	1.3	0.3	3.94
	464	0.7	0.3	0.2	0.7	0.3	20.23

	NODE	Vxx	Vyy
	Cent	1.9	0.6
	457	2.1	0.8
	458	2.1	0.4
	465	1.7	0.4
	464	1.7	0.8

LC		NODE	Fxx	Fyy	Fxy	Fmax	Fmin	ANGLE
SY	(RS)	Cent	1.2	0.5	1.3	2.1	-0.5	37.44
		457	1.4	0.5	1.3	2.3	-0.4	35.68
		458	1.4	0.5	1.3	2.3	-0.4	35.20
		465	1.0	0.5	1.3	2.0	-0.6	39.27
		464	1.0	0.5	1.3	2.0	-0.5	39.78

	NODE	Mxx	Myy	Mxy	Mmax	Mmin	ANGLE
	Cent	0.9	2.7	1.0	3.1	0.5	66.51
	457	1.2	2.8	1.1	3.3	0.6	63.41
	458	0.9	2.3	1.1	2.9	0.3	60.20
	465	0.8	2.4	0.8	2.8	0.5	66.36
	464	0.7	3.4	0.7	3.6	0.5	75.38

	NODE	Vxx	Vyy
	Cent	0.5	0.7
	457	1.1	1.0
	458	1.1	0.3
	465	0.1	0.3
	464	0.1	1.0

LC		NODE	Fxx	Fyy	Fxy	Fmax	Fmin	ANGLE
RC ENV~1	Max	Cent	1.2	0.9	1.3	2.3	-0.1	41.48
		457	1.4	1.0	1.3	2.5	0.0	39.34
		458	1.4	0.8	1.3	2.4	0.0	38.12
		465	0.9	0.8	1.3	2.1	-0.1	43.66
		464	0.9	1.0	1.3	2.2	-0.1	44.95
	Min	Cent	-1.2	-0.1	-1.3	0.4	-2.0	77.30
		457	-1.3	-0.1	-1.3	0.4	-2.1	74.84
		458	-1.3	-0.1	-1.3	0.4	-2.1	-82.67
		465	-1.0	-0.1	-1.3	0.4	-1.9	-84.94
		464	-1.0	-0.1	-1.3	0.4	-1.9	79.88

	NODE	Mxx	Myy	Mxy	Mmax	Mmin	ANGLE
	Max	Cent	-3.0	3.8	-0.6	3.9	-3.1	-85.10
		457	-1.9	4.7	-0.6	4.8	-1.9	-84.51
		458	-4.0	3.4	-0.3	3.5	-4.3	-88.11
		465	-3.1	3.3	-0.5	3.3	-3.5	-85.66

		464	-2.3	3.9	-0.9	4.0	-2.4	-81.84
	Min	Cent	-6.1	-1.6	-2.5	-0.2	-6.9	-61.54
		457	-4.7	-0.8	-2.8	0.7	-5.8	-60.97
		458	-8.6	-1.1	-2.6	-0.1	-9.0	-67.57
		465	-7.0	-1.5	-2.2	-0.5	-7.6	-65.20
		464	-4.5	-2.9	-2.6	-0.9	-5.8	-50.21

	NODE	Vxx	Vyy
Max	Cent	6.2	3.8
	457	7.2	5.3
	458	7.2	2.2
	465	5.3	2.2
	464	5.3	5.3
Min	Cent	1.3	1.2
	457	1.7	1.8
	458	1.7	0.5
	465	0.9	0.5
	464	0.9	1.8

LC		NODE	Fxx	Fyy	Fxy	Fmax	Fmin	ANGLE
RC ENV~2	Max	Cent	0.0	0.6	0.2	0.6	0.0	-81.73
		457	0.1	0.7	0.2	0.7	0.1	-81.51
		458	0.1	0.5	0.2	0.6	0.1	-79.21
		465	-0.1	0.5	0.2	0.6	-0.1	-81.94
		464	-0.1	0.7	0.2	0.7	-0.1	-83.32
	Min	Cent	-0.1	0.3	-0.2	0.3	-0.1	78.83
		457	0.0	0.3	-0.2	0.3	-0.1	76.84
		458	0.0	0.3	-0.2	0.3	-0.1	-83.92
		465	-0.2	0.3	-0.2	0.3	-0.2	-85.78
		464	-0.2	0.3	-0.2	0.3	-0.2	81.10

	NODE	Mxx	Myy	Mxy	Mmax	Mmin	ANGLE
Max	Cent	-3.9	1.1	-1.5	1.6	-4.4	-74.12
	457	-3.0	2.0	-1.7	2.5	-3.6	-72.92
	458	-5.3	1.2	-1.4	1.5	-5.6	-78.10
	465	-4.4	0.9	-1.3	1.2	-4.7	-76.17
	464	-3.0	0.5	-1.6	1.2	-3.7	-68.49
Min	Cent	-4.6	0.1	-1.8	0.6	-5.1	-71.88
	457	-3.5	1.2	-2.0	1.9	-4.2	-69.67
	458	-6.4	0.2	-1.6	0.5	-6.7	-77.94
	465	-5.2	-0.3	-1.6	0.1	-5.6	-75.34
	464	-3.4	-0.8	-2.0	0.2	-4.3	-61.38

	NODE	Vxx	Vyy
Max	Cent	4.6	2.7
	457	5.3	3.9
	458	5.3	1.6
	465	3.8	1.6
	464	3.8	3.9
Min	Cent	2.9	1.8
	457	3.4	2.8
	458	3.4	0.9
	465	2.3	0.9
	464	2.3	2.8

ELEM	MAT	SEC	LC		NODE	Fxx	Fyy	Fxy	Fmax	Fmin	ANGLE
416	1	1	SX (RS)		Cent	0.6	0.2	0.9	1.3	-0.5	38.94
					458	0.7	0.2	0.9	1.3	-0.5	37.09
					459	0.7	0.3	0.9	1.4	-0.4	38.41
					466	0.5	0.3	0.9	1.3	-0.5	40.92
					465	0.5	0.2	0.9	1.2	-0.6	39.55

	NODE	Mxx	Myy	Mxy	Mmax	Mmin	ANGLE
	Cent	1.8	0.3	0.1	1.8	0.3	5.79
	458	1.3	0.3	0.1	1.3	0.3	5.51
	459	2.3	0.4	0.2	2.3	0.4	5.99
	466	2.3	0.3	0.2	2.3	0.3	6.30
	465	1.4	0.3	0.1	1.4	0.3	5.77

	NODE	Vxx	Vyy

	Cent	1.8	0.3	
	458	1.8	0.4	
	459	1.8	0.2	
	466	1.7	0.2	
	465	1.7	0.4	

LC		NODE	Fxx	Fyy	Fxy	Fmax	Fmin	ANGLE
SY (RS)		Cent	1.0	0.4	1.2	1.9	-0.5	38.01
		458	1.2	0.4	1.2	2.0	-0.4	36.01
		459	1.2	0.4	1.2	2.0	-0.4	35.88
		466	0.8	0.4	1.2	1.8	-0.6	40.72
		465	0.8	0.4	1.2	1.8	-0.6	40.86

	NODE	Mxx	Myy	Mxy	Mmax	Mmin	ANGLE
	Cent	0.8	2.2	0.9	2.7	0.3	64.46
	458	0.8	2.4	1.0	2.9	0.3	63.15
	459	0.8	2.1	1.0	2.6	0.3	60.76
	466	0.7	2.1	0.8	2.5	0.3	65.72
	465	0.7	2.5	0.9	2.8	0.3	68.19

	NODE	Vxx	Vyy
	Cent	0.3	0.2
	458	0.4	0.3
	459	0.4	0.2
	466	0.3	0.2
	465	0.3	0.3

LC		NODE	Fxx	Fyy	Fxy	Fmax	Fmin	ANGLE
RC ENV~1	Max	Cent	1.0	0.7	1.0	1.9	-0.1	40.46
		458	1.3	0.8	1.0	2.1	0.1	37.74
		459	1.3	0.7	1.0	2.1	0.0	36.47
		466	0.8	0.7	1.0	1.7	-0.2	44.00
		465	0.8	0.8	1.0	1.8	-0.1	45.38
	Min	Cent	-0.9	-0.1	-1.3	0.3	-1.9	-81.80
		458	-1.0	-0.1	-1.3	0.3	-1.9	87.34
		459	-1.0	-0.2	-1.3	0.3	-2.0	-79.45
		466	-0.8	-0.2	-1.3	0.3	-1.8	-82.46
		465	-0.8	-0.1	-1.3	0.3	-1.8	87.83

		NODE	Mxx	Myy	Mxy	Mmax	Mmin	ANGLE
	Max	Cent	-3.3	3.3	0.0	3.3	-3.4	89.82
		458	-3.9	3.5	-0.0	3.5	-4.1	-89.87
		459	-3.2	3.1	0.2	3.1	-3.3	88.24
		466	-2.6	3.1	0.1	3.1	-2.6	89.38
		465	-3.2	3.3	-0.2	3.3	-3.4	-88.56
	Min	Cent	-8.4	-1.2	-1.8	-0.6	-8.5	-70.62
		458	-8.4	-1.2	-2.1	-0.4	-8.6	-69.54
		459	-9.5	-1.0	-1.7	-0.5	-9.5	-73.47
		466	-8.2	-1.2	-1.5	-0.7	-8.3	-72.26
		465	-7.5	-1.6	-1.9	-0.8	-7.7	-67.00

		NODE	Vxx	Vyy
	Max	Cent	2.2	1.8
		458	2.4	2.2
		459	2.4	1.5
		466	2.1	1.5
		465	2.1	2.2
	Min	Cent	-1.3	0.4
		458	-1.3	0.5
		459	-1.3	0.2
		466	-1.3	0.2
		465	-1.3	0.5

LC		NODE	Fxx	Fyy	Fxy	Fmax	Fmin	ANGLE
RC ENV~2	Max	Cent	0.2	0.5	-0.0	0.6	0.0	-60.67
		458	0.3	0.6	-0.0	0.8	0.1	-58.92
		459	0.3	0.4	-0.0	0.6	0.0	-43.52
		466	0.1	0.4	-0.0	0.5	-0.1	-62.30
		465	0.1	0.6	-0.0	0.7	-0.0	-67.84

Min	Cent	-0.2	0.3	-0.3	0.3	-0.2	-79.82
	458	-0.1	0.3	-0.3	0.3	-0.1	-89.69
	459	-0.1	0.2	-0.3	0.2	-0.1	-76.72
	466	-0.2	0.2	-0.3	0.2	-0.2	-80.63
	465	-0.2	0.3	-0.3	0.3	-0.2	-89.75

	NODE	Mxx	Myy	Mxy	Mmax	Mmin	ANGLE
Max	Cent	-5.0	1.0	-0.8	1.2	-5.1	-81.42
	458	-5.1	1.2	-1.0	1.4	-5.3	-80.60
	459	-5.4	1.1	-0.6	1.2	-5.5	-83.29
	466	-4.6	1.0	-0.5	1.1	-4.8	-82.53
	465	-4.6	0.8	-0.9	1.0	-4.8	-79.32
Min	Cent	-6.2	-0.0	-1.1	0.0	-6.3	-83.01
	458	-6.2	0.2	-1.3	0.4	-6.4	-81.46
	459	-7.0	0.1	-0.9	0.1	-7.0	-85.32
	466	-6.1	-0.2	-0.9	-0.1	-6.2	-84.97
	465	-5.6	-0.4	-1.3	-0.2	-5.8	-80.00

	NODE	Vxx	Vyy
Max	Cent	1.3	1.3
	458	1.4	1.6
	459	1.4	1.0
	466	1.2	1.0
	465	1.2	1.6
Min	Cent	0.0	0.7
	458	0.1	0.9
	459	0.1	0.4
	466	-0.1	0.4
	465	-0.1	0.9

ELEM	MAT	SEC	LC	NODE	Fxx	Fyy	Fxy	Fmax	Fmin	ANGLE
417	1	1	SX (RS)	Cent	1.0	0.3	0.9	1.6	-0.3	33.17
				459	1.3	0.2	0.9	1.8	-0.3	29.54
				460	1.3	0.3	0.9	1.8	-0.2	31.32
				467	0.8	0.3	0.9	1.5	-0.3	37.36
				466	0.8	0.2	0.9	1.5	-0.4	35.23

	NODE	Mxx	Myy	Mxy	Mmax	Mmin	ANGLE
	Cent	2.8	0.4	0.4	2.8	0.4	8.59
	459	2.3	0.4	0.3	2.3	0.4	8.90
	460	3.3	0.6	0.4	3.3	0.6	8.37
	467	3.2	0.4	0.4	3.2	0.3	8.46
	466	2.3	0.4	0.3	2.4	0.3	9.09

	NODE	Vxx	Vyy
	Cent	1.6	0.3
	459	1.7	0.2
	460	1.7	0.4
	467	1.6	0.4
	466	1.6	0.2

LC	NODE	Fxx	Fyy	Fxy	Fmax	Fmin	ANGLE
SY (RS)	Cent	0.8	0.3	1.2	1.7	-0.7	39.97
	459	0.9	0.4	1.2	1.9	-0.6	38.84
	460	0.9	0.3	1.2	1.8	-0.6	37.85
	467	0.6	0.3	1.2	1.6	-0.7	41.60
	466	0.6	0.4	1.2	1.7	-0.7	42.63

	NODE	Mxx	Myy	Mxy	Mmax	Mmin	ANGLE
	Cent	0.7	2.1	0.8	2.5	0.3	64.78
	459	0.8	2.1	0.9	2.6	0.3	62.34
	460	0.9	2.1	0.9	2.6	0.4	62.69
	467	0.6	2.1	0.8	2.5	0.3	67.42
	466	0.6	2.1	0.8	2.5	0.3	66.83

	NODE	Vxx	Vyy
	Cent	0.2	0.1
	459	0.2	0.2
	460	0.2	0.1

		467	0.2	0.1			
		466	0.2	0.2			

LC		NODE	Fxx	Fyy	Fxy	Fmax	Fmin	ANGLE
RC ENV~1	Max	Cent	1.2	0.6	0.9	1.7	0.2	41.09
		459	1.5	0.7	0.9	1.8	0.2	38.09
		460	1.5	0.7	0.9	1.8	0.3	37.43
		467	0.9	0.7	0.9	1.5	0.2	44.82
		466	0.9	0.7	0.9	1.6	0.0	45.52
	Min	Cent	-0.9	-0.0	-1.5	0.4	-1.8	-82.87
		459	-1.1	-0.1	-1.5	0.3	-1.9	-82.23
		460	-1.1	-0.0	-1.5	0.4	-1.9	-71.89
		467	-0.8	-0.0	-1.5	0.4	-1.8	-73.70
		466	-0.8	-0.1	-1.5	0.3	-1.8	-82.08

		NODE	Mxx	Myy	Mxy	Mmax	Mmin	ANGLE
	Max	Cent	-1.8	3.2	0.6	3.3	-1.8	85.36
		459	-3.3	3.1	0.5	3.2	-3.3	86.34
		460	-0.8	3.6	0.8	3.7	-0.8	83.63
		467	-0.4	3.1	0.6	3.2	-0.5	84.28
		466	-2.5	3.1	0.4	3.1	-2.5	87.14
	Min	Cent	-8.1	-1.0	-1.1	-0.7	-8.1	-76.06
		459	-9.5	-1.0	-1.3	-0.7	-9.5	-76.62
		460	-7.8	-0.7	-1.0	-0.4	-7.8	-77.17
		467	-7.0	-1.1	-0.9	-0.9	-7.0	-74.72
		466	-8.3	-1.2	-1.2	-0.8	-8.3	-74.82

		NODE	Vxx	Vyy
	Max	Cent	-0.7	2.0
		459	-0.9	1.5
		460	-0.9	2.5
		467	-0.6	2.5
		466	-0.6	1.5
	Min	Cent	-4.0	0.5
		459	-4.3	0.2
		460	-4.3	0.6
		467	-3.7	0.6
		466	-3.7	0.2

LC		NODE	Fxx	Fyy	Fxy	Fmax	Fmin	ANGLE
RC ENV~2	Max	Cent	0.5	0.4	-0.1	0.9	-0.1	-40.99
		459	0.7	0.4	-0.1	1.1	-0.0	-36.82
		460	0.7	0.5	-0.1	1.0	-0.0	-35.67
		467	0.3	0.5	-0.1	0.8	-0.1	-51.70
		466	0.3	0.4	-0.1	0.8	-0.1	-46.61
	Min	Cent	-0.3	0.2	-0.5	0.3	-0.3	-79.44
		459	-0.2	0.2	-0.5	0.3	-0.3	-78.30
		460	-0.2	0.2	-0.5	0.3	-0.3	-68.90
		467	-0.3	0.2	-0.5	0.3	-0.3	-71.41
		466	-0.3	0.2	-0.5	0.3	-0.3	-78.54

		NODE	Mxx	Myy	Mxy	Mmax	Mmin	ANGLE
	Max	Cent	-4.1	1.1	0.1	1.1	-4.2	-86.94
		459	-5.4	1.1	-0.1	1.1	-5.4	-86.15
		460	-3.5	1.5	0.2	1.5	-3.5	-88.43
		467	-3.1	1.0	0.2	1.0	-3.1	-87.81
		466	-4.6	1.0	-0.1	1.0	-4.6	-85.36
	Min	Cent	-6.0	0.1	-0.4	0.1	-6.0	89.47
		459	-7.1	0.1	-0.6	0.1	-7.1	-88.83
		460	-5.7	0.5	-0.2	0.5	-5.7	87.80
		467	-5.1	-0.1	-0.3	-0.1	-5.1	87.23
		466	-6.1	-0.2	-0.6	-0.2	-6.1	-88.61

		NODE	Vxx	Vyy
	Max	Cent	-1.9	1.4
		459	-2.1	1.0
		460	-2.1	1.8
		467	-1.7	1.8
		466	-1.7	1.0
	Min	Cent	-3.0	0.7
		459	-3.2	0.4

					460	-3.2	1.0				
					467	-2.7	1.0				
					466	-2.7	0.4				

ELEM	MAT	SEC	LC		NODE	Fxx	Fyy	Fxy	Fmax	Fmin	ANGLE
418	1	1	SX	(RS)	Cent	1.5	0.4	1.1	2.2	-0.3	31.08
					460	2.0	0.3	1.1	2.5	-0.2	25.75
					461	2.0	0.5	1.1	2.6	-0.1	27.75
					468	1.1	0.5	1.1	1.9	-0.3	37.81
					467	1.1	0.3	1.1	1.8	-0.5	34.98

	NODE	Mxx	Myy	Mxy	Mmax	Mmin	ANGLE
	Cent	3.7	0.4	0.6	3.8	0.3	9.58
	460	3.2	0.6	0.5	3.3	0.5	9.72
	461	4.2	0.6	0.6	4.3	0.5	8.89
	468	3.9	0.2	0.7	4.0	0.1	9.81
	467	3.3	0.4	0.6	3.4	0.3	10.41

	NODE	Vxx	Vyy
	Cent	1.5	0.6
	460	1.8	0.4
	461	1.8	0.7
	468	1.2	0.7
	467	1.2	0.4

LC		NODE	Fxx	Fyy	Fxy	Fmax	Fmin	ANGLE
SY	(RS)	Cent	0.6	0.4	1.4	1.8	-0.9	42.93
		460	0.7	0.3	1.4	1.9	-0.8	40.71
		461	0.7	0.4	1.4	1.9	-0.8	41.79
		468	0.4	0.4	1.4	1.8	-0.9	45.22
		467	0.4	0.3	1.4	1.7	-1.0	44.12

	NODE	Mxx	Myy	Mxy	Mmax	Mmin	ANGLE
	Cent	0.6	2.3	0.8	2.6	0.3	68.85
	460	0.7	2.1	0.9	2.5	0.3	64.21
	461	0.5	2.3	0.8	2.6	0.2	68.66
	468	0.6	2.5	0.7	2.8	0.4	73.00
	467	0.4	2.1	0.7	2.4	0.2	69.48

	NODE	Vxx	Vyy
	Cent	0.2	0.3
	460	0.5	0.1
	461	0.5	0.4
	468	0.1	0.4
	467	0.1	0.1

LC		NODE	Fxx	Fyy	Fxy	Fmax	Fmin	ANGLE
RC ENV~1	Max	Cent	1.7	0.7	0.9	2.1	0.4	26.52
		460	2.3	0.7	0.9	2.5	0.4	19.23
		461	2.3	0.9	0.9	2.5	0.6	21.64
		468	1.2	0.9	0.9	1.7	0.4	38.28
		467	1.2	0.7	0.9	1.7	0.2	-42.06
	Min	Cent	-1.3	-0.0	-1.8	0.5	-2.3	-72.78
		460	-1.7	0.0	-1.8	0.4	-2.6	-85.88
		461	-1.7	-0.2	-1.8	0.5	-2.6	-74.58
		468	-0.9	-0.2	-1.8	0.5	-2.1	-72.83
		467	-0.9	0.0	-1.8	0.4	-2.0	-84.39

	NODE	Mxx	Myy	Mxy	Mmax	Mmin	ANGLE
Max	Cent	1.3	3.7	1.1	3.8	0.7	79.99
	460	-0.8	3.6	1.0	3.7	-0.9	81.57
	461	3.3	4.5	1.3	4.7	2.1	77.41
	468	2.8	3.5	1.2	3.7	0.7	77.95
	467	-0.1	3.1	0.8	3.2	-0.4	82.63
Min	Cent	-6.0	-0.8	-0.5	-0.7	-6.1	-76.20
	460	-7.8	-0.6	-0.7	-0.5	-7.9	-80.39
	461	-5.1	-0.1	-0.5	0.0	-5.2	-71.67
	468	-5.0	-1.6	-0.4	-1.2	-5.0	-49.78

467	-6.9	-1.1	-0.6	-0.9	-6.9	-77.70

	NODE	Vxx	Vyy
Max	Cent	-3.2	3.5
	460	-3.5	2.5
	461	-3.5	4.6
	468	-3.0	4.6
	467	-3.0	2.5
Min	Cent	-7.7	1.1
	460	-8.6	0.6
	461	-8.6	1.5
	468	-6.8	1.5
	467	-6.8	0.6

LC		NODE	Fxx	Fyy	Fxy	Fmax	Fmin	ANGLE
RC ENV~2	Max	Cent	0.8	0.5	-0.1	1.4	-0.1	-37.10
		460	1.0	0.5	-0.1	1.6	-0.1	-33.40
		461	1.0	0.6	-0.1	1.5	-0.1	-31.97
		468	0.5	0.6	-0.1	1.2	-0.2	-41.10
		467	0.5	0.5	-0.1	1.2	-0.2	-42.81
	Min	Cent	-0.4	0.2	-0.8	0.4	-0.4	-68.99
		460	-0.5	0.3	-0.8	0.3	-0.5	-81.81
		461	-0.5	0.2	-0.8	0.4	-0.5	-70.65
		468	-0.3	0.2	-0.8	0.4	-0.4	-69.43
		467	-0.3	0.3	-0.8	0.3	-0.4	-79.43

	NODE	Mxx	Myy	Mxy	Mmax	Mmin	ANGLE
Max	Cent	-1.6	1.4	0.7	1.4	-1.6	86.73
	460	-3.5	1.5	0.6	1.5	-3.5	88.42
	461	0.1	2.2	0.9	2.2	0.1	83.90
	468	-0.1	1.0	0.8	1.0	-0.2	83.46
	467	-2.8	1.0	0.6	1.0	-2.8	89.24
Min	Cent	-4.0	0.4	0.2	0.6	-4.1	80.35
	460	-5.7	0.5	0.1	0.6	-5.8	84.35
	461	-2.7	1.4	0.3	1.6	-2.8	77.44
	468	-2.7	-0.2	0.2	0.1	-2.8	71.70
	467	-5.0	-0.1	-0.0	-0.0	-5.1	85.21

	NODE	Vxx	Vyy
Max	Cent	-4.4	2.5
	460	-4.9	1.8
	461	-4.9	3.3
	468	-4.0	3.3
	467	-4.0	1.8
Min	Cent	-5.7	1.6
	460	-6.4	1.0
	461	-6.4	2.1
	468	-5.0	2.1
	467	-5.0	1.0

ELEM	MAT	SEC	LC		NODE	Fxx	Fyy	Fxy	Fmax	Fmin	ANGLE
419	1	1	SX	(RS)	Cent	1.9	0.3	1.7	2.9	-0.8	32.05
					461	3.0	0.5	1.7	3.8	-0.4	26.17
					462	3.0	0.5	1.7	3.8	-0.3	26.31
					469	0.7	0.5	1.7	2.2	-1.1	43.05
					468	0.7	0.5	1.7	2.2	-1.1	42.82

	NODE	Mxx	Myy	Mxy	Mmax	Mmin	ANGLE
	Cent	4.4	0.5	1.0	4.6	0.3	13.04
	461	4.4	0.7	0.8	4.5	0.5	11.42
	462	5.6	1.5	1.2	5.9	1.2	14.97
	469	3.6	0.4	1.2	4.0	0.0	18.47
	468	4.0	0.2	0.8	4.2	0.0	11.60

	NODE	Vxx	Vyy
	Cent	0.7	1.8
	461	1.8	0.7
	462	1.8	2.9
	469	0.5	2.9
	468	0.5	0.7

LC		NODE	Fxx	Fyy	Fxy	Fmax	Fmin	ANGLE
SY (RS)		Cent	0.4	1.0	1.9	2.6	-1.2	49.61
		461	0.5	0.4	1.9	2.3	-1.4	44.58
		462	0.5	1.8	1.9	3.1	-0.8	54.38
		469	0.5	1.8	1.9	3.1	-0.9	54.66
		468	0.5	0.4	1.9	2.3	-1.4	44.89

	NODE	Mxx	Myy	Mxy	Mmax	Mmin	ANGLE
	Cent	0.6	2.9	0.6	3.0	0.5	76.04
	461	0.5	2.2	0.8	2.5	0.2	69.56
	462	1.3	3.7	0.7	3.9	1.1	74.23
	469	0.6	3.0	0.5	3.1	0.6	79.24
	468	0.4	2.5	0.5	2.6	0.2	76.93

	NODE	Vxx	Vyy
	Cent	1.1	0.4
	461	1.7	0.4
	462	1.7	1.2
	469	0.5	1.2
	468	0.5	0.4

LC		NODE	Fxx	Fyy	Fxy	Fmax	Fmin	ANGLE
RC ENV~1	Max	Cent	2.1	1.7	1.2	3.2	0.5	-43.07
		461	3.6	0.8	1.2	3.9	0.5	17.28
		462	3.6	2.9	1.2	4.2	1.2	-40.40
		469	0.7	2.9	1.2	3.4	0.1	-60.27
		468	0.7	0.8	1.2	2.3	-0.2	-47.34
	Min	Cent	-1.6	-0.2	-2.6	0.8	-3.1	-75.03
		461	-2.4	-0.1	-2.6	0.5	-3.9	-71.43
		462	-2.4	-0.6	-2.6	1.0	-3.7	-89.29
		469	-0.7	-0.6	-2.6	1.0	-3.1	-89.03
		468	-0.7	-0.1	-2.6	0.5	-2.8	-70.03

		NODE	Mxx	Myy	Mxy	Mmax	Mmin	ANGLE
	Max	Cent	5.2	4.6	1.8	5.8	1.8	21.56
		461	3.4	4.4	1.7	4.7	1.9	76.82
		462	8.4	6.7	2.0	9.0	4.3	20.13
		469	5.9	4.0	1.8	6.4	2.5	17.55
		468	3.3	3.5	1.5	3.8	0.7	24.34
	Min	Cent	-3.6	-1.1	-0.5	0.2	-3.6	-7.23
		461	-5.3	-0.1	-0.3	-0.0	-5.4	-76.95
		462	-2.8	-0.8	-0.7	1.5	-2.9	-81.09
		469	-1.4	-2.0	-0.8	0.9	-2.0	-69.56
		468	-4.8	-1.5	-0.5	-1.0	-4.9	-27.19

		NODE	Vxx	Vyy
	Max	Cent	-4.9	6.4
		461	-4.6	4.6
		462	-4.6	8.2
		469	-5.0	8.2
		468	-5.0	4.6
	Min	Cent	-9.9	1.1
		461	-11.4	1.5
		462	-11.4	0.6
		469	-8.6	0.6
		468	-8.6	1.5

LC		NODE	Fxx	Fyy	Fxy	Fmax	Fmin	ANGLE
RC ENV~2	Max	Cent	1.0	1.1	-0.1	2.3	-0.2	-43.96
		461	1.8	0.6	-0.1	2.6	-0.2	-30.77
		462	1.8	1.7	-0.1	3.0	0.3	-41.59
		469	0.2	1.7	-0.1	2.5	-0.3	-60.70
		468	0.2	0.6	-0.1	1.6	-0.3	-46.34
	Min	Cent	-0.4	0.6	-1.4	0.7	-0.4	-83.88
		461	-0.6	0.2	-1.4	0.4	-0.6	-83.40
		462	-0.6	0.8	-1.4	0.9	-0.6	-85.40
		469	-0.3	0.8	-1.4	0.9	-0.7	-84.29
		468	-0.3	0.2	-1.4	0.4	-1.1	-80.91

	NODE	Mxx	Myy	Mxy	Mmax	Mmin	ANGLE
Max	Cent	2.2	1.8	1.2	2.4	1.4	29.00
	461	0.1	2.2	1.2	2.3	0.0	81.93
	462	4.8	3.3	1.4	5.0	3.2	19.65
	469	3.4	1.1	1.2	3.5	0.9	7.95
	468	0.3	1.1	1.0	1.1	0.1	80.87
Min	Cent	-0.8	0.9	0.4	1.6	-1.2	60.52
	461	-2.9	1.4	0.4	1.7	-3.1	74.40
	462	1.0	2.1	0.4	2.9	0.3	64.32
	469	1.1	-0.5	0.2	1.8	-0.8	41.17
	468	-2.4	-0.1	0.3	0.3	-2.6	70.33

	NODE	Vxx	Vyy
Max	Cent	-5.9	4.6
	461	-6.3	3.3
	462	-6.3	5.8
	469	-5.5	5.8
	468	-5.5	3.3
Min	Cent	-7.4	2.7
	461	-8.4	2.1
	462	-8.4	3.1
	469	-6.4	3.1
	468	-6.4	2.1

ELEM	MAT	SEC	LC	NODE	Fxx	Fyy	Fxy	Fmax	Fmin	ANGLE
420	1	1	SX (RS)	Cent	0.6	0.4	1.3	1.8	-0.8	42.48
				462	0.2	0.3	1.3	1.5	-1.0	46.08
				193	0.2	0.8	1.3	1.8	-0.8	51.79
				196	1.1	0.8	1.3	2.3	-0.3	42.09
				469	1.1	0.3	1.3	2.0	-0.7	36.50

NODE	Mxx	Myy	Mxy	Mmax	Mmin	ANGLE
Cent	2.4	0.3	1.8	3.4	-0.7	29.36
462	6.0	1.6	2.0	6.7	0.8	21.00
193	3.7	1.4	1.2	4.2	0.9	23.49
196	3.3	0.8	1.2	3.8	0.3	22.40
469	3.4	0.5	2.0	4.4	-0.5	26.90

NODE	Vxx	Vyy
Cent	8.2	0.7
462	15.8	2.9
193	15.8	1.6
196	0.6	1.6
469	0.6	2.9

LC	NODE	Fxx	Fyy	Fxy	Fmax	Fmin	ANGLE
SY (RS)	Cent	0.8	2.4	1.5	3.3	-0.0	59.04
	462	1.2	1.6	1.5	2.9	-0.0	49.06
	193	1.2	3.2	1.5	3.9	0.4	61.96
	196	0.5	3.2	1.5	3.8	-0.1	66.32
	469	0.5	1.6	1.5	2.6	-0.5	55.69

NODE	Mxx	Myy	Mxy	Mmax	Mmin	ANGLE
Cent	0.8	3.5	0.3	3.5	0.8	83.57
462	0.7	3.4	0.4	3.4	0.6	81.20
193	2.2	4.9	0.4	4.9	2.2	82.15
196	0.8	2.7	0.3	2.7	0.7	81.72
469	0.8	3.0	0.3	3.1	0.7	81.89

NODE	Vxx	Vyy
Cent	2.3	2.5
462	4.5	1.2
193	4.5	3.8
196	0.2	3.8
469	0.2	1.2

LC	NODE	Fxx	Fyy	Fxy	Fmax	Fmin	ANGLE

LC		NODE	Fxx	Fyy	Fxy	Fmax	Fmin	ANGLE
RC ENV~1	Max	Cent	0.7	3.8	0.9	4.0	0.4	74.28
		462	0.9	2.7	0.9	3.1	0.5	66.81
		193	0.9	4.8	0.9	5.0	0.7	77.16
		196	1.1	4.8	0.9	5.0	0.7	78.31
		469	1.1	2.7	0.9	3.0	0.4	69.92
	Min	Cent	-1.0	-1.0	-2.0	0.9	-3.0	-44.79
		462	-1.5	-0.6	-2.0	1.0	-3.1	-51.87
		193	-1.5	-1.5	-2.0	0.4	-3.5	-45.01
		196	-1.1	-1.5	-2.0	1.0	-3.1	-37.81
		469	-1.1	-0.6	-2.0	1.0	-2.5	-83.05

		NODE	Mxx	Myy	Mxy	Mmax	Mmin	ANGLE
	Max	Cent	7.6	5.7	1.9	7.7	5.1	20.11
		462	9.4	6.4	2.3	10.4	4.6	22.21
		193	11.3	8.1	1.4	11.5	7.9	9.37
		196	9.5	4.2	1.2	9.5	4.2	0.30
		469	5.8	4.0	2.2	6.7	2.9	22.99
	Min	Cent	2.2	-1.3	-1.6	3.7	-1.3	-42.74
		462	-2.5	-0.3	-1.6	2.1	-3.1	-70.59
		193	3.0	-1.7	-1.1	3.7	-1.7	-30.33
		196	2.5	-1.2	-1.3	3.1	-1.2	-27.64
		469	-1.0	-2.0	-1.7	1.6	-2.1	-1.47

		NODE	Vxx	Vyy
	Max	Cent	2.4	7.3
		462	10.1	8.2
		193	10.1	7.0
		196	-5.3	7.0
		469	-5.3	8.2
	Min	Cent	-14.0	0.7
		462	-21.6	0.6
		193	-21.6	-1.0
		196	-8.6	-1.0
		469	-8.6	0.6

LC		NODE	Fxx	Fyy	Fxy	Fmax	Fmin	ANGLE
RC ENV~2	Max	Cent	0.1	2.0	-0.0	2.2	-0.3	-66.86
		462	-0.2	1.5	-0.0	2.0	-0.3	-67.08
		193	-0.2	2.5	-0.0	2.6	-0.3	-81.09
		196	0.4	2.5	-0.0	2.6	-0.1	-80.56
		469	0.4	1.5	-0.0	2.1	-0.2	-61.81
	Min	Cent	-0.4	1.0	-1.1	1.2	-0.6	-82.80
		462	-0.5	0.8	-1.1	0.8	-0.9	-80.57
		193	-0.5	1.1	-1.1	1.4	-0.8	-66.39
		196	-0.4	1.1	-1.1	1.4	-0.4	-72.93
		469	-0.4	0.8	-1.1	0.8	-0.4	-80.42

		NODE	Mxx	Myy	Mxy	Mmax	Mmin	ANGLE
	Max	Cent	5.7	2.2	1.1	5.7	2.2	1.20
		462	5.7	3.5	1.5	5.7	3.5	6.63
		193	8.4	3.8	0.9	8.5	3.7	8.59
		196	7.1	1.5	0.7	7.1	1.5	0.14
		469	3.5	1.1	1.3	3.5	1.0	-3.24
	Min	Cent	3.9	1.2	-0.2	4.2	1.0	19.86
		462	1.5	2.3	-0.0	3.2	0.5	58.47
		193	6.1	2.4	-0.1	6.1	2.3	-1.00
		196	4.8	0.1	-0.2	4.8	0.0	5.16
		469	1.3	-0.4	-0.2	2.1	-0.7	39.12

		NODE	Vxx	Vyy
	Max	Cent	-3.6	5.2
		462	-1.2	5.8
		193	-1.2	4.9
		196	-5.8	4.9
		469	-5.8	5.8
	Min	Cent	-9.1	3.1
		462	-11.8	3.1
		193	-11.8	2.8
		196	-6.5	2.8
		469	-6.5	3.1

ELEM	MAT	SEC	LC		NODE	Fxx	Fyy	Fxy	Fmax	Fmin	ANGLE
421	1	1	SX	(RS)	Cent	0.0	0.1	1.0	1.1	-0.9	46.64
					416	0.1	0.0	1.0	1.1	-0.9	43.41
					463	0.1	0.3	1.0	1.2	-0.8	46.97
					470	0.1	0.3	1.0	1.2	-0.8	46.93
					424	0.1	0.0	1.0	1.1	-0.9	43.38

		NODE	Mxx	Myy	Mxy	Mmax	Mmin	ANGLE
		Cent	0.4	0.2	0.7	1.0	-0.5	41.13
		416	0.8	0.2	0.9	1.4	-0.4	35.08
		463	0.4	0.4	0.7	1.1	-0.3	45.66
		470	0.5	0.5	0.7	1.2	-0.2	43.18
		424	0.1	0.0	0.8	0.9	-0.7	42.97

		NODE	Vxx	Vyy
		Cent	0.7	0.1
		416	0.9	0.0
		463	0.9	0.2
		470	0.8	0.2
		424	0.8	0.0

LC		NODE	Fxx	Fyy	Fxy	Fmax	Fmin	ANGLE
SY	(RS)	Cent	0.8	1.5	0.6	1.9	0.5	61.24
		416	1.0	1.7	0.6	2.1	0.7	61.21
		463	1.0	1.4	0.6	1.8	0.6	53.37
		470	0.6	1.4	0.6	1.7	0.3	60.98
		424	0.6	1.7	0.6	2.0	0.4	66.89

		NODE	Mxx	Myy	Mxy	Mmax	Mmin	ANGLE
		Cent	0.7	3.2	0.1	3.2	0.7	86.66
		416	0.8	3.9	0.1	3.9	0.8	88.36
		463	0.8	3.9	0.2	3.9	0.8	85.92
		470	0.7	2.6	0.2	2.6	0.7	83.86
		424	0.7	2.5	0.1	2.5	0.7	87.90

		NODE	Vxx	Vyy
		Cent	0.3	2.4
		416	0.4	2.5
		463	0.4	2.4
		470	0.2	2.4
		424	0.2	2.5

LC		NODE	Fxx	Fyy	Fxy	Fmax	Fmin	ANGLE
RC ENV~1	Max	Cent	0.4	2.4	1.0	2.6	0.3	73.97
		416	0.7	2.7	1.0	2.9	0.5	74.07
		463	0.7	2.2	1.0	2.4	0.5	70.08
		470	0.2	2.2	1.0	2.4	0.0	73.76
		424	0.2	2.7	1.0	2.8	0.1	76.61
	Min	Cent	-1.2	-0.7	-1.0	-0.3	-1.5	-57.44
		416	-1.3	-0.8	-1.0	-0.4	-1.7	-57.85
		463	-1.3	-0.5	-1.0	-0.2	-1.6	-63.05
		470	-1.2	-0.5	-1.0	-0.2	-1.4	-57.39
		424	-1.2	-0.8	-1.0	-0.4	-1.5	-51.04

		NODE	Mxx	Myy	Mxy	Mmax	Mmin	ANGLE
	Max	Cent	1.3	2.4	0.1	2.5	0.3	-76.56
		416	3.0	3.7	0.4	3.8	1.6	-78.80
		463	1.2	3.9	-0.2	4.1	0.5	-78.63
		470	-0.0	1.1	-0.1	1.3	-0.5	-72.58
		424	0.9	0.6	0.5	0.9	-0.0	-4.11
	Min	Cent	-0.9	-4.1	-1.5	-0.8	-4.3	-13.08
		416	-0.0	-4.1	-1.4	0.1	-4.2	-8.17
		463	-0.9	-3.9	-1.8	-0.5	-4.3	-18.54
		470	-1.8	-4.7	-1.6	-1.5	-5.0	-19.87
		424	-1.3	-5.3	-1.2	-1.2	-5.4	-7.16

		NODE	Vxx	Vyy
	Max	Cent	2.6	5.0

		416	3.3	5.2	
		463	3.3	4.8	
		470	2.1	4.8	
		424	2.1	5.2	
	Min	Cent	0.7	0.1	
		416	0.9	0.2	
		463	0.9	0.0	
		470	0.2	0.0	
		424	0.2	0.2	

LC		NODE	Fxx	Fyy	Fxy	Fmax	Fmin	ANGLE
RC ENV~2	Max	Cent	-0.2	1.5	0.2	1.5	-0.2	-89.74
		416	-0.1	1.6	0.2	1.6	-0.1	-89.74
		463	-0.1	1.4	0.2	1.4	-0.2	86.26
		470	-0.3	1.4	0.2	1.4	-0.3	86.62
		424	-0.3	1.6	0.2	1.6	-0.3	-89.76
	Min	Cent	-0.8	0.8	-0.1	0.8	-0.8	85.96
		416	-0.7	0.8	-0.1	0.8	-0.7	85.87
		463	-0.7	0.8	-0.1	0.8	-0.7	-87.33
		470	-0.9	0.8	-0.1	0.8	-0.9	-87.49
		424	-0.9	0.8	-0.1	0.8	-0.9	86.28

	NODE	Mxx	Myy	Mxy	Mmax	Mmin	ANGLE
Max	Cent	0.8	-0.9	-0.6	0.9	-1.2	-10.32
	416	2.1	-0.2	-0.4	2.2	-0.4	-7.61
	463	0.8	0.0	-0.9	1.1	-0.9	-24.71
	470	-0.1	-1.4	-0.7	0.0	-2.0	-12.58
	424	0.5	-1.9	-0.3	0.5	-2.0	-4.39
Min	Cent	-0.4	-2.6	-1.0	0.1	-2.7	-29.79
	416	0.7	-1.8	-0.9	1.1	-1.9	-24.85
	463	-0.3	-1.6	-1.3	0.7	-2.0	-35.23
	470	-1.3	-3.3	-1.1	-0.7	-3.5	-24.97
	424	-0.7	-3.7	-0.7	-0.5	-3.8	-11.91

	NODE	Vxx	Vyy
Max	Cent	1.9	3.3
	416	2.4	3.5
	463	2.4	3.1
	470	1.5	3.1
	424	1.5	3.5
Min	Cent	1.4	2.6
	416	1.8	2.7
	463	1.8	2.4
	470	1.0	2.4
	424	1.0	2.7

ELEM	MAT	SEC	LC		NODE	Fxx	Fyy	Fxy	Fmax	Fmin	ANGLE
422	1	1	SX (RS)		Cent	0.2	0.3	1.0	1.2	-0.7	45.42
					463	0.3	0.2	1.0	1.2	-0.8	44.22
					464	0.3	0.3	1.0	1.3	-0.7	45.66
					471	0.2	0.3	1.0	1.3	-0.7	46.44
					470	0.2	0.2	1.0	1.2	-0.8	44.99

	NODE	Mxx	Myy	Mxy	Mmax	Mmin	ANGLE
	Cent	0.7	0.4	0.5	1.0	0.1	37.24
	463	0.6	0.4	0.5	1.0	-0.0	40.00
	464	0.6	0.4	0.3	0.9	0.1	37.83
	471	1.0	0.5	0.4	1.2	0.3	30.12
	470	0.7	0.4	0.6	1.1	-0.0	38.07

	NODE	Vxx	Vyy
	Cent	0.8	0.4
	463	0.8	0.2
	464	0.8	0.6
	471	0.8	0.6
	470	0.8	0.2

LC		NODE	Fxx	Fyy	Fxy	Fmax	Fmin	ANGLE
SY (RS)		Cent	0.7	1.0	1.4	2.3	-0.5	47.71

		463	0.9	1.4	1.4	2.6	-0.3	49.98
		464	0.9	0.7	1.4	2.2	-0.6	42.63
		471	0.6	0.7	1.4	2.0	-0.8	45.88
		470	0.6	1.4	1.4	2.4	-0.5	53.06

	NODE	Mxx	Myy	Mxy	Mmax	Mmin	ANGLE
	Cent	0.8	3.0	0.2	3.0	0.8	85.37
	463	0.8	3.8	0.2	3.9	0.8	86.86
	464	1.1	3.1	0.2	3.1	1.1	83.65
	471	0.7	2.5	0.2	2.6	0.7	84.22
	470	0.6	2.6	0.3	2.7	0.6	82.37

	NODE	Vxx	Vyy
	Cent	0.5	1.8
	463	0.8	2.4
	464	0.8	1.2
	471	0.2	1.2
	470	0.2	2.4

LC		NODE	Fxx	Fyy	Fxy	Fmax	Fmin	ANGLE
RC ENV~1	Max	Cent	0.5	1.7	1.5	2.7	-0.3	56.64
		463	0.7	2.2	1.5	3.1	-0.2	58.87
		464	0.7	1.3	1.5	2.5	-0.3	50.42
		471	0.3	1.3	1.5	2.3	-0.4	54.66
		470	0.3	2.2	1.5	3.0	-0.4	62.21
	Min	Cent	-1.0	-0.3	-1.3	0.7	-2.0	-52.67
		463	-1.1	-0.5	-1.3	0.5	-2.2	-50.93
		464	-1.1	-0.1	-1.3	0.7	-2.0	-85.77
		471	-1.0	-0.1	-1.3	0.7	-1.9	-86.60
		470	-1.0	-0.5	-1.3	0.6	-2.1	-49.17

	NODE	Mxx	Myy	Mxy	Mmax	Mmin	ANGLE
Max	Cent	-1.0	2.6	-0.7	2.8	-1.3	-75.24
	463	0.5	3.8	-0.8	4.1	-0.1	-73.70
	464	-1.4	3.4	-1.1	3.7	-1.7	-76.66
	471	-1.6	2.0	-0.6	2.2	-1.8	-78.07
	470	-0.8	1.1	-0.4	1.3	-1.1	-73.45
Min	Cent	-2.8	-3.5	-2.2	-1.6	-4.6	-35.98
	463	-1.3	-3.9	-2.4	-0.7	-4.6	-24.40
	464	-3.9	-2.7	-2.5	-1.4	-5.2	-52.17
	471	-3.9	-3.2	-2.0	-1.9	-5.2	-47.24
	470	-2.3	-4.9	-1.8	-1.6	-5.3	-25.07

	NODE	Vxx	Vyy
Max	Cent	5.5	3.9
	463	6.6	4.8
	464	6.6	3.3
	471	4.5	3.3
	470	4.5	4.8
Min	Cent	2.1	0.2
	463	2.8	0.0
	464	2.8	0.4
	471	1.4	0.4
	470	1.4	0.0

LC		NODE	Fxx	Fyy	Fxy	Fmax	Fmin	ANGLE
RC ENV~2	Max	Cent	-0.2	1.2	0.2	1.2	-0.3	84.37
		463	-0.2	1.4	0.2	1.4	-0.2	88.98
		464	-0.2	1.0	0.2	1.0	-0.2	83.09
		471	-0.3	1.0	0.2	1.0	-0.3	84.13
		470	-0.3	1.4	0.2	1.4	-0.3	89.12
	Min	Cent	-0.6	0.7	-0.1	0.7	-0.6	-87.82
		463	-0.4	0.8	-0.1	0.8	-0.4	84.21
		464	-0.4	0.5	-0.1	0.5	-0.4	-87.18
		471	-0.7	0.5	-0.1	0.5	-0.7	-87.71
		470	-0.7	0.8	-0.1	0.8	-0.7	84.87

	NODE	Mxx	Myy	Mxy	Mmax	Mmin	ANGLE
Max	Cent	-1.3	-0.4	-1.1	0.3	-2.4	-59.83
	463	0.2	-0.0	-1.3	1.1	-1.6	-48.91

464	-2.3	0.4	-1.4	1.0	-3.0	-67.26
471	-2.3	-0.5	-0.9	-0.1	-2.9	-67.01
470	-0.8	-1.5	-0.8	-0.5	-2.4	-16.28
Min Cent	-2.1	-2.1	-1.6	-0.4	-3.3	-35.76
463	-0.8	-1.8	-1.7	0.8	-2.6	-32.84
464	-2.9	-1.1	-1.8	-0.1	-3.9	-56.41
471	-2.9	-2.1	-1.4	-1.3	-3.8	-48.19
470	-1.8	-3.4	-1.3	-0.9	-3.7	-30.92

	NODE	Vxx	Vyy
Max	Cent	4.0	2.8
	463	4.8	3.1
	464	4.8	2.4
	471	3.3	2.4
	470	3.3	3.1
Min	Cent	2.9	2.0
	463	3.6	2.4
	464	3.6	1.6
	471	2.2	1.6
	470	2.2	2.4

ELEM	MAT	SEC	LC		NODE	Fxx	Fyy	Fxy	Fmax	Fmin	ANGLE
423	1	1	SX	(RS)	Cent	0.3	0.3	1.0	1.2	-0.7	45.00
					464	0.2	0.3	1.0	1.2	-0.7	46.83
					465	0.2	0.2	1.0	1.2	-0.8	45.64
					472	0.4	0.2	1.0	1.3	-0.7	42.67
					471	0.4	0.3	1.0	1.3	-0.6	43.86

	NODE	Mxx	Myy	Mxy	Mmax	Mmin	ANGLE
	Cent	1.1	0.4	0.2	1.1	0.4	14.96
	464	0.7	0.4	0.2	0.8	0.3	30.35
	465	1.3	0.5	0.1	1.3	0.4	7.88
	472	1.5	0.4	0.2	1.5	0.4	9.90
	471	1.0	0.5	0.3	1.1	0.4	23.03

	NODE	Vxx	Vyy
	Cent	1.5	0.5
	464	1.7	0.6
	465	1.7	0.4
	472	1.4	0.4
	471	1.4	0.6

LC		NODE	Fxx	Fyy	Fxy	Fmax	Fmin	ANGLE
SY	(RS)	Cent	0.7	0.5	1.5	2.1	-0.8	43.07
		464	1.0	0.7	1.5	2.3	-0.6	42.13
		465	1.0	0.4	1.5	2.2	-0.8	39.67
		472	0.5	0.4	1.5	1.9	-1.0	44.18
		471	0.5	0.7	1.5	2.1	-0.9	46.70

	NODE	Mxx	Myy	Mxy	Mmax	Mmin	ANGLE
	Cent	0.7	2.6	0.4	2.7	0.6	78.97
	464	0.8	3.2	0.4	3.3	0.7	80.43
	465	0.9	2.4	0.6	2.6	0.7	72.22
	472	0.6	2.2	0.4	2.3	0.6	77.76
	471	0.6	2.6	0.2	2.6	0.6	82.82

	NODE	Vxx	Vyy
	Cent	0.1	0.9
	464	0.1	1.2
	465	0.1	0.5
	472	0.2	0.5
	471	0.2	1.2

LC		NODE	Fxx	Fyy	Fxy	Fmax	Fmin	ANGLE
RC ENV~1	Max	Cent	0.6	1.2	1.4	2.3	-0.3	49.78
		464	1.0	1.4	1.4	2.6	-0.1	48.49
		465	1.0	1.0	1.4	2.4	-0.1	44.20
		472	0.3	1.0	1.4	2.0	-0.4	51.22

		471	0.3	1.4	1.4	2.3	-0.4	55.17
	Min	Cent	-0.9	0.0	-1.5	0.6	-2.0	88.75
		464	-1.0	-0.1	-1.5	0.7	-2.1	-83.73
		465	-1.0	0.0	-1.5	0.5	-2.1	88.16
		472	-0.8	0.0	-1.5	0.5	-1.9	88.82
		471	-0.8	-0.1	-1.5	0.7	-2.0	-85.42

		NODE	Mxx	Myy	Mxy	Mmax	Mmin	ANGLE
	Max	Cent	-2.6	2.6	-0.8	2.7	-2.9	-82.33
		464	-2.3	3.4	-0.9	3.6	-2.5	-81.04
		465	-3.2	2.9	-0.7	3.0	-3.5	-84.29
		472	-2.6	2.3	-0.6	2.4	-2.7	-84.41
		471	-2.1	1.9	-0.8	2.0	-2.4	-80.01
	Min	Cent	-5.6	-2.6	-2.0	-1.7	-6.3	-70.02
		464	-4.6	-3.0	-2.3	-1.6	-5.7	-52.14
		465	-7.2	-1.9	-2.0	-1.2	-7.6	-67.11
		472	-6.4	-2.2	-1.7	-1.9	-6.7	-75.25
		471	-4.7	-3.4	-1.9	-2.5	-5.8	-53.63

		NODE	Vxx	Vyy
	Max	Cent	4.7	2.7
		464	5.3	3.3
		465	5.3	2.1
		472	4.2	2.1
		471	4.2	3.3
	Min	Cent	0.7	0.4
		464	0.9	0.4
		465	0.9	0.4
		472	0.5	0.4
		471	0.5	0.4

LC		NODE	Fxx	Fyy	Fxy	Fmax	Fmin	ANGLE
RC ENV~2	Max	Cent	-0.1	0.9	0.1	0.9	-0.1	-83.53
		464	-0.0	1.0	0.1	1.0	-0.0	89.59
		465	-0.0	0.7	0.1	0.7	-0.0	-81.00
		472	-0.2	0.7	0.1	0.7	-0.3	-83.85
		471	-0.2	1.0	0.1	1.0	-0.3	89.70
	Min	Cent	-0.4	0.5	-0.2	0.5	-0.4	89.24
		464	-0.2	0.6	-0.2	0.6	-0.2	-84.25
		465	-0.2	0.4	-0.2	0.4	-0.2	88.88
		472	-0.6	0.4	-0.2	0.4	-0.6	89.27
		471	-0.6	0.6	-0.2	0.6	-0.6	-85.81

		NODE	Mxx	Myy	Mxy	Mmax	Mmin	ANGLE
	Max	Cent	-3.7	0.1	-1.0	0.4	-4.0	-73.93
		464	-3.0	0.2	-1.3	0.7	-3.5	-70.35
		465	-4.4	0.5	-1.1	0.8	-4.7	-76.74
		472	-4.0	0.1	-0.7	0.3	-4.2	-77.60
		471	-3.1	-0.6	-0.9	-0.2	-3.5	-69.73
	Min	Cent	-4.2	-1.4	-1.5	-1.0	-4.7	-71.08
		464	-3.5	-1.2	-1.7	-0.6	-4.2	-62.99
		465	-5.3	-0.8	-1.5	-0.5	-5.7	-76.57
		472	-4.8	-1.4	-1.2	-1.1	-5.0	-75.95
		471	-3.5	-2.3	-1.4	-1.7	-4.3	-57.73

		NODE	Vxx	Vyy
	Max	Cent	3.4	1.9
		464	3.8	2.4
		465	3.8	1.5
		472	3.0	1.5
		471	3.0	2.4
	Min	Cent	2.0	1.3
		464	2.3	1.6
		465	2.3	0.9
		472	1.6	0.9
		471	1.6	1.6

ELEM	MAT	SEC	LC		NODE	Fxx	Fyy	Fxy	Fmax	Fmin	ANGLE
424	1	1	SX (RS)		Cent	0.5	0.2	0.9	1.2	-0.5	41.08
					465	0.5	0.2	0.9	1.2	-0.5	40.39
					466	0.5	0.2	0.9	1.3	-0.5	40.89

	473	0.5	0.2	0.9	1.3	-0.5	40.96
	472	0.5	0.2	0.9	1.2	-0.5	40.47

	NODE	Mxx	Myy	Mxy	Mmax	Mmin	ANGLE
	Cent	1.8	0.4	0.2	1.9	0.4	9.64
	465	1.4	0.5	0.2	1.4	0.5	9.85
	466	2.3	0.5	0.3	2.3	0.4	8.36
	473	2.3	0.4	0.3	2.3	0.3	9.84
	472	1.5	0.4	0.2	1.6	0.4	11.94

	NODE	Vxx	Vyy
	Cent	1.7	0.4
	465	1.7	0.4
	466	1.7	0.4
	473	1.6	0.4
	472	1.6	0.4

LC		NODE	Fxx	Fyy	Fxy	Fmax	Fmin	ANGLE
SY (RS)		Cent	0.6	0.4	1.3	1.8	-0.8	42.50
		465	0.8	0.4	1.3	1.9	-0.7	41.23
		466	0.8	0.3	1.3	1.9	-0.8	40.24
		473	0.4	0.3	1.3	1.7	-0.9	43.66
		472	0.4	0.4	1.3	1.7	-0.9	44.68

	NODE	Mxx	Myy	Mxy	Mmax	Mmin	ANGLE
	Cent	0.6	2.2	0.6	2.4	0.5	71.93
	465	0.7	2.5	0.6	2.7	0.5	72.63
	466	0.7	2.2	0.7	2.5	0.4	69.05
	473	0.6	2.0	0.5	2.2	0.4	71.20
	472	0.6	2.2	0.5	2.4	0.5	74.92

	NODE	Vxx	Vyy
	Cent	0.2	0.4
	465	0.3	0.5
	466	0.3	0.4
	473	0.2	0.4
	472	0.2	0.5

LC		NODE	Fxx	Fyy	Fxy	Fmax	Fmin	ANGLE
RC ENV~1	Max	Cent	0.5	0.9	1.1	1.8	-0.2	48.77
		465	0.8	1.0	1.1	1.9	-0.1	46.26
		466	0.8	0.8	1.1	1.9	-0.1	44.42
		473	0.3	0.8	1.1	1.6	-0.2	51.09
		472	0.3	1.0	1.1	1.7	-0.2	52.83
	Min	Cent	-0.7	0.1	-1.5	0.5	-1.9	-77.66
		465	-0.7	0.0	-1.5	0.5	-1.9	-82.30
		466	-0.7	0.1	-1.5	0.5	-1.9	-74.83
		473	-0.8	0.1	-1.5	0.4	-1.8	-78.74
		472	-0.8	0.0	-1.5	0.5	-1.8	-84.00

	NODE	Mxx	Myy	Mxy	Mmax	Mmin	ANGLE
Max	Cent	-2.8	2.6	-0.2	2.6	-2.8	-88.26
	465	-3.3	2.9	-0.3	2.9	-3.5	-87.56
	466	-2.6	2.8	-0.0	2.8	-2.7	-89.63
	473	-2.2	2.3	-0.1	2.4	-2.2	-89.14
	472	-2.9	2.3	-0.3	2.3	-3.0	-86.78
Min	Cent	-7.7	-1.9	-1.4	-1.5	-7.8	-83.98
	465	-7.6	-2.0	-1.6	-1.4	-7.8	-68.73
	466	-8.4	-1.6	-1.4	-1.2	-8.5	-72.38
	473	-7.6	-1.8	-1.2	-1.7	-7.7	-84.03
	472	-7.0	-2.3	-1.5	-2.1	-7.2	-78.78

	NODE	Vxx	Vyy
Max	Cent	1.9	1.9
	465	2.1	2.1
	466	2.1	1.6
	473	1.8	1.6
	472	1.8	2.1
Min	Cent	-1.4	0.3

		465	-1.3	0.4
		466	-1.3	0.2
		473	-1.5	0.2
		472	-1.5	0.4

LC		NODE	Fxx	Fyy	Fxy	Fmax	Fmin	ANGLE
RC ENV~2	Max	Cent	0.0	0.7	-0.1	0.8	-0.1	-69.46
		465	0.1	0.7	-0.1	0.9	-0.0	-66.98
		466	0.1	0.6	-0.1	0.8	-0.1	-64.47
		473	-0.1	0.6	-0.1	0.7	-0.2	-71.53
		472	-0.1	0.7	-0.1	0.9	-0.2	-73.04
	Min	Cent	-0.4	0.4	-0.4	0.4	-0.4	-81.57
		465	-0.2	0.4	-0.4	0.4	-0.2	-80.67
		466	-0.2	0.3	-0.4	0.4	-0.2	-79.86
		473	-0.5	0.3	-0.4	0.4	-0.6	-78.08
		472	-0.5	0.4	-0.4	0.4	-0.6	-82.79

		NODE	Mxx	Myy	Mxy	Mmax	Mmin	ANGLE
	Max	Cent	-4.5	0.4	-0.5	0.5	-4.7	-80.86
		465	-4.7	0.5	-0.7	0.6	-4.8	-79.85
		466	-4.7	0.6	-0.5	0.7	-4.9	-82.17
		473	-4.3	0.4	-0.3	0.5	-4.4	-82.13
		472	-4.4	0.0	-0.6	0.2	-4.5	-79.38
	Min	Cent	-5.7	-1.0	-1.0	-0.9	-5.8	-83.71
		465	-5.7	-0.9	-1.2	-0.8	-5.8	-81.39
		466	-6.2	-0.7	-0.9	-0.6	-6.3	-85.14
		473	-5.6	-1.1	-0.9	-1.0	-5.7	-83.95
		472	-5.3	-1.5	-1.1	-1.3	-5.4	-79.14

		NODE	Vxx	Vyy
	Max	Cent	1.1	1.3
		465	1.2	1.5
		466	1.2	1.1
		473	1.0	1.1
		472	1.0	1.5
	Min	Cent	-0.2	0.7
		465	-0.1	0.9
		466	-0.1	0.6
		473	-0.3	0.6
		472	-0.3	0.9

ELEM	MAT	SEC	LC		NODE	Fxx	Fyy	Fxy	Fmax	Fmin	ANGLE
425	1	1	SX (RS)		Cent	0.7	0.3	0.9	1.4	-0.4	38.23
					466	0.8	0.2	0.9	1.5	-0.4	35.40
					467	0.8	0.3	0.9	1.5	-0.4	36.27
					474	0.6	0.3	0.9	1.3	-0.5	40.31
					473	0.6	0.2	0.9	1.3	-0.5	39.37

		NODE	Mxx	Myy	Mxy	Mmax	Mmin	ANGLE
		Cent	2.8	0.4	0.5	2.8	0.3	10.70
		466	2.3	0.5	0.4	2.4	0.4	11.04
		467	3.2	0.5	0.5	3.3	0.4	9.88
		474	3.1	0.3	0.6	3.2	0.2	10.62
		473	2.4	0.4	0.4	2.5	0.3	11.95

		NODE	Vxx	Vyy
		Cent	1.5	0.4
		466	1.6	0.4
		467	1.6	0.4
		474	1.5	0.4
		473	1.5	0.4

LC		NODE	Fxx	Fyy	Fxy	Fmax	Fmin	ANGLE
SY (RS)		Cent	0.5	0.3	1.3	1.7	-1.0	43.24
		466	0.6	0.3	1.3	1.8	-0.9	41.80
		467	0.6	0.3	1.3	1.8	-0.9	41.88
		474	0.3	0.3	1.3	1.7	-1.0	44.83
		473	0.3	0.3	1.3	1.7	-1.0	44.75

	NODE	Mxx	Myy	Mxy	Mmax	Mmin	ANGLE
	Cent	0.6	2.1	0.6	2.3	0.4	70.57
	466	0.6	2.2	0.7	2.5	0.4	70.12
	467	0.6	2.2	0.6	2.5	0.4	70.49
	474	0.6	2.0	0.5	2.2	0.4	71.03
	473	0.6	2.0	0.6	2.2	0.4	70.84

	NODE	Vxx	Vyy
	Cent	0.1	0.4
	466	0.2	0.4
	467	0.2	0.4
	474	0.1	0.4
	473	0.1	0.4

LC		NODE	Fxx	Fyy	Fxy	Fmax	Fmin	ANGLE
RC ENV~1	Max	Cent	0.6	0.8	1.0	1.6	0.1	49.09
		466	0.9	0.9	1.0	1.7	0.2	45.62
		467	0.9	0.8	1.0	1.7	0.2	45.72
		474	0.4	0.8	1.0	1.5	-0.0	-49.90
		473	0.4	0.9	1.0	1.5	-0.0	-49.98
	Min	Cent	-0.7	0.1	-1.7	0.5	-1.9	-75.87
		466	-0.8	0.1	-1.7	0.5	-1.9	-75.13
		467	-0.8	0.1	-1.7	0.5	-1.9	-75.05
		474	-0.7	0.1	-1.7	0.5	-1.9	-76.55
		473	-0.7	0.1	-1.7	0.5	-1.9	-76.61

		NODE	Mxx	Myy	Mxy	Mmax	Mmin	ANGLE
	Max	Cent	-1.4	2.6	0.2	2.6	-1.4	87.87
		466	-2.5	2.8	0.2	2.8	-2.5	88.17
		467	-0.5	2.9	0.4	2.9	-0.5	86.34
		474	-0.3	2.4	0.2	2.4	-0.3	87.54
		473	-2.1	2.4	0.1	2.4	-2.1	89.40
	Min	Cent	-7.5	-1.6	-1.0	-1.4	-7.5	-88.31
		466	-8.4	-1.6	-1.1	-1.3	-8.4	-75.08
		467	-7.1	-1.5	-0.9	-1.3	-7.1	-73.28
		474	-6.6	-1.8	-0.9	-1.8	-6.7	-89.46
		473	-7.7	-1.8	-1.1	-1.8	-7.8	-86.35

		NODE	Vxx	Vyy
	Max	Cent	-0.5	1.8
		466	-0.6	1.6
		467	-0.6	1.9
		474	-0.5	1.9
		473	-0.5	1.6
	Min	Cent	-3.6	0.3
		466	-3.7	0.2
		467	-3.7	0.3
		474	-3.4	0.3
		473	-3.4	0.2

LC		NODE	Fxx	Fyy	Fxy	Fmax	Fmin	ANGLE
RC ENV~2	Max	Cent	0.2	0.6	-0.2	1.0	-0.2	-59.23
		466	0.3	0.6	-0.2	1.1	-0.1	-55.23
		467	0.3	0.6	-0.2	1.0	-0.1	-54.23
		474	0.0	0.6	-0.2	0.9	-0.3	-62.71
		473	0.0	0.6	-0.2	1.0	-0.3	-63.44
	Min	Cent	-0.4	0.3	-0.6	0.4	-0.5	-73.95
		466	-0.3	0.3	-0.6	0.4	-0.4	-72.89
		467	-0.3	0.3	-0.6	0.4	-0.4	-72.84
		474	-0.5	0.3	-0.6	0.4	-0.6	-74.90
		473	-0.5	0.3	-0.6	0.4	-0.6	-74.94

		NODE	Mxx	Myy	Mxy	Mmax	Mmin	ANGLE
	Max	Cent	-3.7	0.5	-0.0	0.5	-3.8	-84.72
		466	-4.7	0.6	-0.1	0.6	-4.7	-85.00
		467	-3.1	0.7	0.1	0.7	-3.2	-85.97
		474	-2.9	0.4	0.1	0.4	-3.0	-84.20
		473	-4.2	0.4	-0.2	0.4	-4.4	-83.53
	Min	Cent	-5.5	-0.8	-0.6	-0.8	-5.5	-87.94
		466	-6.2	-0.7	-0.6	-0.7	-6.2	-88.88

467	-5.2	-0.5	-0.4	-0.5	-5.2	88.44
474	-4.8	-1.1	-0.5	-1.1	-4.8	-88.87
473	-5.7	-1.1	-0.7	-1.1	-5.7	-86.11

	NODE	Vxx	Vyy
Max	Cent	-1.6	1.2
	466	-1.7	1.1
	467	-1.7	1.4
	474	-1.5	1.4
	473	-1.5	1.1
Min	Cent	-2.6	0.6
	466	-2.7	0.6
	467	-2.7	0.7
	474	-2.5	0.7
	473	-2.5	0.6

ELEM	MAT	SEC	LC		NODE	Fxx	Fyy	Fxy	Fmax	Fmin	ANGLE
426	1	1	SX	(RS)	Cent	0.8	0.3	1.0	1.6	-0.5	37.80
					467	1.1	0.3	1.0	1.8	-0.4	33.39
					468	1.1	0.3	1.0	1.8	-0.3	34.30
					475	0.5	0.3	1.0	1.5	-0.6	42.13
					474	0.5	0.3	1.0	1.4	-0.6	41.08

NODE	Mxx	Myy	Mxy	Mmax	Mmin	ANGLE
Cent	3.5	0.3	0.7	3.7	0.2	12.16
467	3.3	0.5	0.6	3.4	0.4	11.76
468	4.0	0.4	0.8	4.1	0.3	11.93
475	3.7	0.2	0.8	3.9	-0.0	12.85
474	3.3	0.3	0.7	3.4	0.2	12.34

NODE	Vxx	Vyy
Cent	1.0	0.4
467	1.2	0.4
468	1.2	0.4
475	0.8	0.4
474	0.8	0.4

LC		NODE	Fxx	Fyy	Fxy	Fmax	Fmin	ANGLE
SY	(RS)	Cent	0.3	0.3	1.6	1.9	-1.2	45.12
		467	0.4	0.3	1.6	1.9	-1.2	44.09
		468	0.4	0.5	1.6	2.0	-1.1	45.53
		475	0.3	0.5	1.6	1.9	-1.2	46.78
		474	0.3	0.3	1.6	1.8	-1.3	45.34

NODE	Mxx	Myy	Mxy	Mmax	Mmin	ANGLE
Cent	0.5	2.2	0.5	2.3	0.4	74.27
467	0.5	2.2	0.6	2.4	0.3	72.84
468	0.6	2.5	0.5	2.7	0.5	75.81
475	0.5	2.1	0.5	2.2	0.4	75.17
474	0.5	2.0	0.5	2.2	0.3	72.61

NODE	Vxx	Vyy
Cent	0.1	0.6
467	0.1	0.4
468	0.1	0.8
475	0.1	0.8
474	0.1	0.4

LC		NODE	Fxx	Fyy	Fxy	Fmax	Fmin	ANGLE
RC ENV~1	Max	Cent	0.8	1.0	1.1	2.0	0.3	-48.55
		467	1.3	0.8	1.1	2.0	0.4	-47.55
		468	1.3	1.2	1.1	2.2	0.6	-52.74
		475	0.4	1.2	1.1	1.9	0.1	-49.08
		474	0.4	0.8	1.1	1.9	0.0	-48.79
	Min	Cent	-0.8	0.2	-2.0	0.6	-2.1	-73.83
		467	-1.0	0.1	-2.0	0.5	-2.1	-72.64
		468	-1.0	0.2	-2.0	0.6	-2.1	-74.17
		475	-0.7	0.2	-2.0	0.6	-2.2	-74.88

		474	-0.7	0.1	-2.0	0.5	-2.2	-73.48

		NODE	Mxx	Myy	Mxy	Mmax	Mmin	ANGLE
Max	Cent		1.3	2.8	0.7	2.8	0.4	84.40
		467	-0.2	2.9	0.7	3.0	-0.4	84.86
		468	2.8	3.4	1.0	3.5	0.9	81.61
		475	2.6	2.4	0.7	2.8	0.2	17.27
		474	0.1	2.4	0.4	2.4	-0.2	86.76
Min	Cent		-5.8	-1.6	-0.8	-1.4	-5.9	-66.40
		467	-7.0	-1.5	-0.7	-1.3	-7.0	-76.27
		468	-5.1	-1.7	-0.7	-1.3	-5.2	-45.87
		475	-4.7	-2.1	-1.0	-1.9	-4.9	53.13
		474	-6.4	-1.7	-0.9	-1.7	-6.6	-89.75

		NODE	Vxx	Vyy
Max	Cent		-3.0	2.3
		467	-3.0	1.9
		468	-3.0	2.7
		475	-3.0	2.7
		474	-3.0	1.9
Min	Cent		-6.4	0.3
		467	-6.8	0.3
		468	-6.8	0.3
		475	-6.1	0.3
		474	-6.1	0.3

LC		NODE	Fxx	Fyy	Fxy	Fmax	Fmin	ANGLE
RC ENV~2	Max	Cent	0.3	0.8	-0.3	1.4	-0.3	-55.83
		467	0.6	0.6	-0.3	1.4	-0.2	-48.54
		468	0.6	0.9	-0.3	1.6	-0.1	-53.20
		475	0.0	0.9	-0.3	1.4	-0.4	-61.91
		474	0.0	0.6	-0.3	1.2	-0.4	-58.28
	Min	Cent	-0.3	0.4	-0.9	0.5	-0.6	-71.42
		467	-0.3	0.3	-0.9	0.4	-0.5	-69.49
		468	-0.3	0.4	-0.9	0.5	-0.4	-71.61
		475	-0.5	0.4	-0.9	0.5	-0.7	-73.06
		474	-0.5	0.3	-0.9	0.4	-0.8	-71.22

		NODE	Mxx	Myy	Mxy	Mmax	Mmin	ANGLE
Max	Cent		-1.4	0.6	0.4	0.6	-1.5	-89.35
		467	-2.9	0.7	0.4	0.7	-2.9	-88.77
		468	-0.1	0.8	0.6	0.9	-0.2	87.34
		475	-0.2	0.3	0.4	0.3	-0.7	-87.79
		474	-2.5	0.4	0.2	0.4	-2.6	-85.47
Min	Cent		-3.8	-0.8	-0.2	-0.8	-3.8	87.91
		467	-5.1	-0.5	-0.2	-0.5	-5.1	86.43
		468	-2.8	-0.4	-0.1	-0.3	-2.9	70.05
		475	-2.5	-1.3	-0.3	-1.2	-2.6	68.65
		474	-4.7	-1.0	-0.4	-1.0	-4.7	88.57

		NODE	Vxx	Vyy
Max	Cent		-3.8	1.6
		467	-4.0	1.4
		468	-4.0	1.9
		475	-3.7	1.9
		474	-3.7	1.4
Min	Cent		-4.8	0.9
		467	-5.0	0.7
		468	-5.0	1.0
		475	-4.5	1.0
		474	-4.5	0.7

ELEM	MAT	SEC	LC		NODE	Fxx	Fyy	Fxy	Fmax	Fmin	ANGLE
427	1	1	SX (RS)		Cent	0.6	0.3	0.9	1.4	-0.5	41.17
					468	0.7	0.3	0.9	1.5	-0.4	39.33
					469	0.7	0.4	0.9	1.5	-0.4	40.18
					476	0.5	0.4	0.9	1.4	-0.5	43.09
					475	0.5	0.3	0.9	1.3	-0.5	42.22

		NODE	Mxx	Myy	Mxy	Mmax	Mmin	ANGLE

Cent	3.7	0.3	1.2	4.1	-0.1	16.80
468	4.1	0.5	1.0	4.3	0.2	14.55
469	3.7	0.1	1.2	4.1	-0.2	17.28
476	3.5	0.3	1.3	3.9	-0.1	19.61
475	3.6	0.2	1.0	3.9	-0.1	15.50

NODE	Vxx	Vyy
Cent	0.4	0.2
468	0.5	0.4
469	0.5	0.5
476	0.4	0.5
475	0.4	0.4

LC		NODE	Fxx	Fyy	Fxy	Fmax	Fmin	ANGLE
SY (RS)		Cent	0.3	0.7	1.6	2.2	-1.1	48.55
		468	0.5	0.5	1.6	2.1	-1.1	44.60
		469	0.5	1.1	1.6	2.4	-0.8	50.17
		476	0.2	1.1	1.6	2.3	-1.0	52.78
		475	0.2	0.5	1.6	1.9	-1.3	47.35

	NODE	Mxx	Myy	Mxy	Mmax	Mmin	ANGLE
	Cent	0.5	2.4	0.4	2.5	0.4	79.74
	468	0.4	2.5	0.4	2.6	0.3	79.03
	469	0.6	2.9	0.3	2.9	0.6	81.54
	476	0.5	2.1	0.3	2.2	0.4	79.48
	475	0.4	2.1	0.4	2.2	0.3	77.53

NODE	Vxx	Vyy
Cent	0.3	1.2
468	0.5	0.8
469	0.5	1.5
476	0.1	1.5
475	0.1	0.8

LC		NODE	Fxx	Fyy	Fxy	Fmax	Fmin	ANGLE
RC ENV~1	Max	Cent	0.5	1.5	1.1	2.2	0.3	-60.58
		468	0.7	1.2	1.1	2.0	0.4	-56.77
		469	0.7	2.0	1.1	2.6	0.5	62.76
		476	0.4	2.0	1.1	2.5	0.2	66.14
		475	0.4	1.2	1.1	2.0	0.1	-48.26
	Min	Cent	-0.7	0.0	-2.1	0.8	-2.3	-70.54
		468	-0.7	0.2	-2.1	0.6	-2.3	-73.04
		469	-0.7	-0.2	-2.1	1.0	-2.5	-72.50
		476	-0.6	-0.2	-2.1	1.0	-2.4	-73.59
		475	-0.6	0.2	-2.1	0.6	-2.2	-73.79

	NODE	Mxx	Myy	Mxy	Mmax	Mmin	ANGLE
Max	Cent	4.4	3.1	1.2	4.8	1.0	17.52
	468	3.3	3.4	1.2	3.8	0.8	25.27
	469	6.0	4.0	1.4	6.4	2.7	15.13
	476	5.5	2.5	1.2	5.8	2.2	13.72
	475	2.9	2.4	1.0	3.2	0.1	20.24
Min	Cent	-3.0	-1.7	-1.1	0.1	-3.4	41.93
	468	-4.9	-1.6	-0.9	-1.0	-5.0	-27.75
	469	-1.4	-1.8	-1.1	1.4	-1.9	-69.09
	476	-1.4	-2.3	-1.3	0.8	-2.3	-59.61
	475	-4.4	-2.0	-1.1	-1.4	-4.7	60.01

	NODE	Vxx	Vyy
Max	Cent	-4.8	2.9
	468	-5.0	2.7
	469	-5.0	3.3
	476	-4.7	3.3
	475	-4.7	2.7
Min	Cent	-8.1	0.1
	468	-8.6	0.3
	469	-8.6	-0.1
	476	-7.6	-0.1
	475	-7.6	0.3

LC		NODE	Fxx	Fyy	Fxy	Fmax	Fmin	ANGLE
RC ENV~2	Max	Cent	0.1	1.1	-0.3	1.6	-0.3	-60.99
		468	0.2	0.9	-0.3	1.5	-0.3	-57.15
		469	0.2	1.3	-0.3	1.8	-0.2	-61.71
		476	0.0	1.3	-0.3	1.7	-0.4	-64.28
		475	0.0	0.9	-0.3	1.4	-0.4	-60.25
	Min	Cent	-0.3	0.6	-0.9	0.7	-0.6	-69.59
		468	-0.3	0.4	-0.9	0.5	-0.6	-70.87
		469	-0.3	0.7	-0.9	0.9	-0.5	-71.54
		476	-0.4	0.7	-0.9	0.8	-0.6	-72.70
		475	-0.4	0.4	-0.9	0.5	-0.7	-71.83

		NODE	Mxx	Myy	Mxy	Mmax	Mmin	ANGLE
	Max	Cent	1.8	0.7	0.8	1.8	0.7	-4.49
		468	0.3	0.9	0.8	0.9	0.3	84.64
		469	3.5	1.2	0.9	3.5	1.1	-0.86
		476	3.1	0.4	0.7	3.1	0.4	-4.42
		475	0.2	0.4	0.6	0.4	-0.5	89.47
	Min	Cent	-0.7	-0.8	-0.1	0.2	-1.2	43.60
		468	-2.5	-0.3	-0.0	-0.1	-2.7	67.17
		469	1.1	-0.2	-0.0	1.5	-0.5	39.04
		476	0.9	-1.4	-0.3	1.0	-1.4	17.35
		475	-2.2	-1.2	-0.2	-0.9	-2.3	64.62

		NODE	Vxx	Vyy
	Max	Cent	-5.3	2.0
		468	-5.5	1.9
		469	-5.5	2.3
		476	-5.0	2.3
		475	-5.0	1.9
	Min	Cent	-6.1	1.2
		468	-6.4	1.0
		469	-6.4	1.4
		476	-5.7	1.4
		475	-5.7	1.0

ELEM	MAT	SEC	LC		NODE	Fxx	Fyy	Fxy	Fmax	Fmin	ANGLE
428	1	1	SX (RS)		Cent	0.7	0.5	0.9	1.5	-0.3	42.06
					469	1.1	0.4	0.9	1.7	-0.2	33.95
					196	1.1	0.7	0.9	1.8	-0.0	38.20
					199	0.3	0.7	0.9	1.4	-0.4	51.13
					476	0.3	0.4	0.9	1.2	-0.6	46.51

		NODE	Mxx	Myy	Mxy	Mmax	Mmin	ANGLE
		Cent	3.1	0.5	1.6	3.8	-0.3	25.73
		469	3.5	0.1	1.5	4.1	-0.5	21.21
		196	3.3	0.7	1.9	4.2	-0.3	27.72
		199	2.4	1.0	1.7	3.5	-0.2	33.64
		476	3.2	0.3	1.4	3.7	-0.3	21.78

		NODE	Vxx	Vyy
		Cent	1.1	0.7
		469	0.6	0.5
		196	0.6	1.0
		199	1.7	1.0
		476	1.7	0.5

LC		NODE	Fxx	Fyy	Fxy	Fmax	Fmin	ANGLE
SY (RS)		Cent	0.4	1.3	1.1	2.1	-0.3	55.78
		469	0.7	1.1	1.1	2.0	-0.2	49.62
		196	0.7	1.6	1.1	2.3	-0.1	55.52
		199	0.2	1.6	1.1	2.2	-0.4	61.01
		476	0.2	1.1	1.1	1.8	-0.6	55.98

		NODE	Mxx	Myy	Mxy	Mmax	Mmin	ANGLE
		Cent	0.6	2.5	0.2	2.6	0.5	83.22
		469	0.7	2.9	0.3	3.0	0.7	83.02
		196	0.8	3.0	0.3	3.0	0.8	83.51

		199	0.4	2.1	0.2	2.2	0.3	82.97
		476	0.3	2.1	0.3	2.1	0.3	82.06

	NODE	Vxx	Vyy
	Cent	0.2	1.6
	469	0.2	1.5
	196	0.2	1.6
	199	0.1	1.6
	476	0.1	1.5

LC		NODE	Fxx	Fyy	Fxy	Fmax	Fmin	ANGLE
RC ENV~1	Max	Cent	0.5	2.4	0.8	2.6	0.3	71.83
		469	1.0	2.0	0.8	2.3	0.6	66.23
		196	1.0	2.7	0.8	3.0	0.7	72.11
		199	0.1	2.7	0.8	2.9	-0.1	75.48
		476	0.1	2.0	0.8	2.3	-0.1	71.51
	Min	Cent	-0.8	-0.3	-1.5	1.1	-1.9	-47.70
		469	-1.2	-0.1	-1.5	0.9	-2.0	-81.45
		196	-1.2	-0.4	-1.5	0.9	-2.1	-48.55
		199	-0.5	-0.4	-1.5	1.1	-1.9	-44.17
		476	-0.5	-0.1	-1.5	0.9	-1.7	-80.48

	NODE	Mxx	Myy	Mxy	Mmax	Mmin	ANGLE
Max	Cent	7.1	3.6	1.6	7.5	3.5	15.28
	469	5.9	4.1	1.6	6.4	3.1	17.31
	196	9.6	4.8	1.9	9.6	4.7	-1.05
	199	8.7	3.0	1.7	8.7	3.0	-0.85
	476	5.4	2.5	1.4	5.8	2.3	15.15
Min	Cent	0.9	-1.5	-1.6	2.3	-1.5	-41.43
	469	-1.0	-1.8	-1.5	1.7	-1.8	-3.58
	196	2.5	-1.3	-1.8	3.8	-1.3	-33.80
	199	3.2	-1.6	-1.7	3.9	-1.7	-23.08
	476	-0.9	-2.2	-1.4	1.1	-2.2	-55.64

	NODE	Vxx	Vyy
Max	Cent	-4.7	3.6
	469	-5.3	3.3
	196	-5.3	3.9
	199	-4.1	3.9
	476	-4.1	3.3
Min	Cent	-8.7	-0.1
	469	-8.6	-0.1
	196	-8.6	-0.1
	199	-8.8	-0.1
	476	-8.8	-0.1

LC		NODE	Fxx	Fyy	Fxy	Fmax	Fmin	ANGLE
RC ENV~2	Max	Cent	0.1	1.5	-0.1	1.6	-0.2	-67.79
		469	0.3	1.3	-0.1	1.6	-0.1	-64.91
		196	0.3	1.7	-0.1	1.8	-0.1	-79.38
		199	-0.1	1.7	-0.1	1.8	-0.2	-79.27
		476	-0.1	1.3	-0.1	1.5	-0.3	-68.66
	Min	Cent	-0.4	0.7	-0.7	0.9	-0.5	-80.93
		469	-0.5	0.7	-0.7	0.8	-0.5	-80.07
		196	-0.5	0.8	-0.7	1.0	-0.5	-72.48
		199	-0.4	0.8	-0.7	1.0	-0.5	-65.98
		476	-0.4	0.7	-0.7	0.8	-0.5	-79.25

	NODE	Mxx	Myy	Mxy	Mmax	Mmin	ANGLE
Max	Cent	5.2	1.1	0.9	5.2	1.1	-0.47
	469	3.6	1.2	0.9	3.6	1.2	-4.61
	196	7.2	1.7	1.0	7.2	1.7	-1.02
	199	6.5	0.9	0.9	6.5	0.9	-0.88
	476	3.3	0.4	0.8	3.3	0.4	0.18
Min	Cent	3.1	-0.4	-0.3	3.2	-0.5	11.63
	469	1.3	-0.2	-0.2	1.7	-0.4	35.16
	196	4.9	0.5	-0.4	5.0	0.3	10.08
	199	4.9	-0.9	-0.4	4.9	-0.9	6.03
	476	1.2	-1.3	-0.2	1.3	-1.3	16.21

	NODE	Vxx	Vyy

Max	Cent	-5.7	2.5
	469	-5.8	2.3
	196	-5.8	2.7
	199	-5.4	2.7
	476	-5.4	2.3
Min	Cent	-6.5	1.4
	469	-6.5	1.4
	196	-6.5	1.4
	199	-6.6	1.4
	476	-6.6	1.4

ELEM	MAT	SEC	LC		NODE	Fxx	Fyy	Fxy	Fmax	Fmin	ANGLE
429	1	1	SX (RS)		Cent	0.1	0.1	0.8	0.9	-0.7	45.21
					424	0.1	0.0	0.8	0.9	-0.7	43.26
					470	0.1	0.3	0.8	1.0	-0.6	47.56
					477	0.1	0.3	0.8	1.0	-0.6	47.76
					432	0.1	0.0	0.8	0.9	-0.7	43.47

	NODE	Mxx	Myy	Mxy	Mmax	Mmin	ANGLE
	Cent	0.4	0.2	0.8	1.1	-0.6	41.65
	424	0.1	0.0	0.8	0.9	-0.7	42.87
	470	0.5	0.5	0.8	1.2	-0.3	44.81
	477	1.0	0.3	0.9	1.6	-0.3	33.71
	432	0.1	0.0	0.9	1.0	-0.8	43.34

	NODE	Vxx	Vyy
	Cent	1.4	0.2
	424	0.8	0.0
	470	0.8	0.4
	477	2.1	0.4
	432	2.1	0.0

LC		NODE	Fxx	Fyy	Fxy	Fmax	Fmin	ANGLE
SY (RS)		Cent	0.5	0.5	0.5	1.1	-0.0	46.15
		424	0.7	0.5	0.5	1.1	0.1	41.81
		470	0.7	0.5	0.5	1.1	0.1	41.85
		477	0.4	0.5	0.5	1.0	-0.1	48.77
		432	0.4	0.5	0.5	1.0	-0.1	48.73

	NODE	Mxx	Myy	Mxy	Mmax	Mmin	ANGLE
	Cent	0.8	2.0	0.2	2.1	0.8	82.82
	424	0.7	2.8	0.1	2.8	0.7	87.81
	470	0.7	2.6	0.2	2.7	0.7	84.18
	477	0.8	1.4	0.2	1.5	0.7	72.02
	432	1.1	1.4	0.1	1.4	1.0	71.70

	NODE	Vxx	Vyy
	Cent	0.2	2.5
	424	0.2	2.7
	470	0.2	2.3
	477	0.5	2.3
	432	0.5	2.7

LC		NODE	Fxx	Fyy	Fxy	Fmax	Fmin	ANGLE
RC ENV~1	Max	Cent	0.0	1.9	0.8	1.9	-0.1	-89.07
		424	0.3	2.1	0.8	2.1	0.1	-89.05
		470	0.3	1.8	0.8	1.8	0.1	89.71
		477	-0.1	1.8	0.8	1.8	-0.3	89.74
		432	-0.1	2.1	0.8	2.1	-0.3	-89.14
	Min	Cent	-1.4	0.3	-0.8	0.5	-1.4	-70.11
		424	-1.3	0.3	-0.8	0.5	-1.3	-71.50
		470	-1.3	0.3	-0.8	0.5	-1.3	-70.82
		477	-1.6	0.3	-0.8	0.5	-1.6	-69.30
		432	-1.6	0.3	-0.8	0.5	-1.6	-70.06

	NODE	Mxx	Myy	Mxy	Mmax	Mmin	ANGLE
Max	Cent	0.7	0.7	0.5	0.8	-0.1	-3.79

		424	1.0	1.3	0.5	1.4	0.1	-78.43
		470	0.0	1.4	0.4	1.5	-0.3	-83.44
		477	0.4	0.2	0.6	0.4	-0.4	-1.95
		432	1.5	-0.1	0.7	1.5	-0.2	-2.96
	Min	Cent	-1.6	-4.5	-1.1	-1.5	-4.5	-13.59
		424	-1.2	-5.0	-1.1	-1.1	-5.0	-7.50
		470	-1.8	-4.5	-1.2	-1.6	-4.5	-15.03
		477	-2.2	-4.3	-1.1	-1.7	-4.3	-27.74
		432	-1.7	-4.5	-1.1	-1.7	-4.6	-13.65

		NODE	Vxx	Vyy
	Max	Cent	2.5	2.5
		424	2.1	2.7
		470	2.1	2.4
		477	3.1	2.4
		432	3.1	2.7
	Min	Cent	-0.4	-2.5
		424	0.2	-2.7
		470	0.2	-2.3
		477	-1.0	-2.3
		432	-1.0	-2.7

LC		NODE	Fxx	Fyy	Fxy	Fmax	Fmin	ANGLE
RC ENV~2	Max	Cent	-0.3	1.4	0.0	1.4	-0.3	-89.16
		424	-0.3	1.5	0.0	1.5	-0.3	-89.15
		470	-0.3	1.3	0.0	1.3	-0.3	89.70
		477	-0.4	1.3	0.0	1.3	-0.4	89.73
		432	-0.4	1.5	0.0	1.5	-0.4	-89.22
	Min	Cent	-1.0	0.8	-0.1	0.8	-1.0	-89.79
		424	-0.9	0.8	-0.1	0.8	-0.9	88.80
		470	-0.9	0.8	-0.1	0.8	-0.9	-87.73
		477	-1.1	0.8	-0.1	0.8	-1.1	-87.96
		432	-1.1	0.8	-0.1	0.8	-1.1	88.90

		NODE	Mxx	Myy	Mxy	Mmax	Mmin	ANGLE
	Max	Cent	0.4	-1.3	-0.2	0.4	-1.5	-4.14
		424	0.6	-1.5	-0.3	0.6	-1.6	-5.45
		470	-0.1	-1.1	-0.3	-0.1	-1.5	-5.65
		477	0.1	-1.2	-0.1	0.1	-1.4	-2.31
		432	0.9	-1.5	-0.1	0.9	-1.5	-3.01
	Min	Cent	-1.0	-3.1	-0.7	-0.7	-3.1	-24.75
		424	-0.6	-3.5	-0.7	-0.4	-3.5	-15.88
		470	-1.2	-3.1	-0.8	-0.8	-3.1	-20.90
		477	-1.4	-2.9	-0.6	-1.1	-3.0	-24.67
		432	-0.8	-3.1	-0.6	-0.6	-3.2	-13.28

		NODE	Vxx	Vyy
	Max	Cent	1.6	0.4
		424	1.5	0.4
		470	1.5	0.5
		477	1.7	0.5
		432	1.7	0.4
	Min	Cent	1.0	-0.8
		424	1.0	-0.9
		470	1.0	-0.7
		477	1.0	-0.7
		432	1.0	-0.9

ELEM	MAT	SEC	LC		NODE	Fxx	Fyy	Fxy	Fmax	Fmin	ANGLE
430	1	1	SX (RS)		Cent	0.3	0.3	0.8	1.1	-0.5	45.60
					470	0.2	0.3	0.8	1.0	-0.5	46.11
					471	0.2	0.3	0.8	1.0	-0.5	47.20
					478	0.4	0.3	0.8	1.1	-0.4	44.59
					477	0.4	0.3	0.8	1.1	-0.5	43.50

		NODE	Mxx	Myy	Mxy	Mmax	Mmin	ANGLE
		Cent	1.0	0.4	0.5	1.4	0.1	29.98
		470	0.7	0.5	0.6	1.2	-0.1	40.02
		471	0.9	0.6	0.4	1.3	0.3	35.66
		478	1.5	0.5	0.5	1.7	0.3	20.46
		477	1.2	0.3	0.6	1.5	-0.0	27.64

	NODE	Vxx	Vyy
	Cent	0.9	0.5
	470	0.8	0.4
	471	0.8	0.5
	478	0.9	0.5
	477	0.9	0.4

LC		NODE	Fxx	Fyy	Fxy	Fmax	Fmin	ANGLE
SY (RS)		Cent	0.5	0.5	1.3	1.8	-0.8	45.56
		470	0.6	0.5	1.3	1.8	-0.7	44.48
		471	0.6	0.5	1.3	1.8	-0.7	44.23
		478	0.4	0.5	1.3	1.7	-0.8	46.56
		477	0.4	0.5	1.3	1.7	-0.8	46.81

	NODE	Mxx	Myy	Mxy	Mmax	Mmin	ANGLE
	Cent	0.7	2.0	0.3	2.0	0.6	78.05
	470	0.7	2.7	0.2	2.7	0.6	83.02
	471	0.7	2.3	0.3	2.4	0.7	81.09
	478	0.6	1.5	0.3	1.6	0.5	74.12
	477	0.8	1.4	0.3	1.5	0.7	67.07

	NODE	Vxx	Vyy
	Cent	0.4	2.0
	470	0.2	2.3
	471	0.2	1.6
	478	0.9	1.6
	477	0.9	2.3

LC		NODE	Fxx	Fyy	Fxy	Fmax	Fmin	ANGLE
RC ENV~1	Max	Cent	0.1	1.7	1.3	2.1	-0.4	58.05
		470	0.3	1.9	1.3	2.2	-0.4	57.01
		471	0.3	1.6	1.3	2.1	-0.4	55.46
		478	-0.1	1.6	1.3	2.0	-0.5	58.99
		477	-0.1	1.9	1.3	2.1	-0.5	60.37
	Min	Cent	-1.2	0.2	-1.3	0.9	-1.7	-62.79
		470	-1.0	0.3	-1.3	1.0	-1.7	-88.13
		471	-1.0	0.2	-1.3	0.8	-1.8	-85.17
		478	-1.5	0.2	-1.3	0.8	-1.8	-63.58
		477	-1.5	0.3	-1.3	0.9	-1.7	-65.68

	NODE	Mxx	Myy	Mxy	Mmax	Mmin	ANGLE
Max	Cent	-1.1	1.0	0.1	1.0	-1.1	-87.15
	470	-0.8	1.4	0.0	1.4	-0.9	-82.00
	471	-1.7	1.8	-0.2	1.8	-1.7	-84.27
	478	-1.2	0.9	0.3	0.9	-1.3	89.22
	477	-0.4	0.1	0.4	0.1	-0.8	83.84
Min	Cent	-3.2	-3.9	-1.1	-2.3	-4.2	-39.08
	470	-2.3	-4.7	-1.3	-1.8	-4.7	-21.17
	471	-3.9	-3.3	-1.4	-2.7	-4.7	-36.49
	478	-4.2	-3.4	-0.9	-3.2	-4.6	-54.14
	477	-2.8	-4.4	-0.8	-2.1	-4.4	-37.43

	NODE	Vxx	Vyy
Max	Cent	4.7	2.0
	470	4.5	2.4
	471	4.5	1.7
	478	5.0	1.7
	477	5.0	2.4
Min	Cent	1.3	-2.0
	470	1.4	-2.3
	471	1.4	-1.6
	478	1.3	-1.6
	477	1.3	-2.3

LC		NODE	Fxx	Fyy	Fxy	Fmax	Fmin	ANGLE
RC ENV~2	Max	Cent	-0.4	1.2	-0.0	1.2	-0.4	-89.19
		470	-0.3	1.4	-0.0	1.4	-0.3	-88.00

		471	-0.3	1.1	-0.0	1.1	-0.3	-89.08
		478	-0.4	1.1	-0.0	1.1	-0.4	-89.20
		477	-0.4	1.4	-0.0	1.4	-0.4	-88.26
	Min	Cent	-0.9	0.7	-0.1	0.7	-0.9	-86.32
		470	-0.7	0.8	-0.1	0.8	-0.7	-88.29
		471	-0.7	0.6	-0.1	0.6	-0.7	-85.71
		478	-1.0	0.6	-0.1	0.6	-1.0	-86.35
		477	-1.0	0.8	-0.1	0.8	-1.0	-88.50

	NODE	Mxx	Myy	Mxy	Mmax	Mmin	ANGLE
Max	Cent	-1.5	-0.9	-0.1	-0.8	-2.0	-71.92
	470	-0.7	-1.2	-0.4	-0.7	-1.9	-8.52
	471	-2.3	-0.5	-0.3	-0.3	-2.6	-73.83
	478	-2.3	-0.6	0.2	-0.5	-2.3	-82.32
	477	-0.5	-1.3	0.1	-0.5	-1.5	2.97
Min	Cent	-2.4	-2.7	-0.8	-1.7	-3.0	-23.19
	470	-1.7	-3.2	-0.9	-1.1	-3.3	-28.53
	471	-3.0	-2.2	-1.0	-1.9	-3.5	-51.03
	478	-3.1	-2.3	-0.6	-2.2	-3.4	-71.09
	477	-1.9	-3.0	-0.6	-1.5	-3.0	-28.96

	NODE	Vxx	Vyy
Max	Cent	3.4	0.5
	470	3.3	0.5
	471	3.3	0.5
	478	3.6	0.5
	477	3.6	0.5
Min	Cent	2.2	-0.6
	470	2.2	-0.7
	471	2.2	-0.5
	478	2.2	-0.5
	477	2.2	-0.7

ELEM	MAT	SEC	LC	NODE	Fxx	Fyy	Fxy	Fmax	Fmin	ANGLE
431	1	1	SX (RS)	Cent	0.4	0.3	0.7	1.1	-0.4	42.22
				471	0.4	0.3	0.7	1.1	-0.4	43.85
				472	0.4	0.3	0.7	1.1	-0.4	42.91
				479	0.5	0.3	0.7	1.2	-0.4	40.11
				478	0.5	0.3	0.7	1.2	-0.3	41.04

	NODE	Mxx	Myy	Mxy	Mmax	Mmin	ANGLE
	Cent	1.4	0.5	0.3	1.5	0.4	18.09
	471	1.0	0.6	0.3	1.2	0.5	30.89
	472	1.4	0.5	0.3	1.5	0.5	16.47
	479	1.7	0.5	0.4	1.8	0.4	15.10
	478	1.5	0.5	0.4	1.6	0.4	17.73

	NODE	Vxx	Vyy
	Cent	1.4	0.6
	471	1.4	0.5
	472	1.4	0.7
	479	1.4	0.7
	478	1.4	0.5

LC	NODE	Fxx	Fyy	Fxy	Fmax	Fmin	ANGLE
SY (RS)	Cent	0.4	0.5	1.5	1.9	-1.0	45.28
	471	0.5	0.5	1.5	2.0	-1.0	44.92
	472	0.5	0.4	1.5	2.0	-1.0	44.11
	479	0.4	0.4	1.5	1.9	-1.1	45.00
	478	0.4	0.5	1.5	2.0	-1.0	45.81

	NODE	Mxx	Myy	Mxy	Mmax	Mmin	ANGLE
	Cent	0.6	1.9	0.2	1.9	0.6	80.50
	471	0.6	2.3	0.2	2.4	0.6	82.69
	472	0.7	2.1	0.3	2.1	0.6	79.57
	479	0.6	1.6	0.2	1.7	0.5	77.67
	478	0.5	1.5	0.2	1.6	0.5	77.74

	NODE	Vxx	Vyy

		Cent	0.3	1.3
		471	0.2	1.6
		472	0.2	1.0
		479	0.5	1.0
		478	0.5	1.6

LC		NODE	Fxx	Fyy	Fxy	Fmax	Fmin	ANGLE
RC ENV~1	Max	Cent	0.1	1.4	1.4	2.1	-0.2	55.19
		471	0.3	1.6	1.4	2.2	-0.2	54.43
		472	0.3	1.3	1.4	2.1	-0.2	52.49
		479	0.1	1.3	1.4	2.0	-0.3	55.33
		478	0.1	1.6	1.4	2.1	-0.2	57.13
	Min	Cent	-1.0	0.2	-1.6	0.8	-2.0	-82.18
		471	-0.8	0.2	-1.6	0.8	-1.9	-83.35
		472	-0.8	0.2	-1.6	0.7	-2.0	-78.76
		479	-1.3	0.2	-1.6	0.7	-2.0	-81.14
		478	-1.3	0.2	-1.6	0.8	-2.0	-64.37

		NODE	Mxx	Myy	Mxy	Mmax	Mmin	ANGLE
	Max	Cent	-2.3	1.5	-0.1	1.5	-2.3	-86.49
		471	-2.2	1.7	-0.3	1.7	-2.2	-84.28
		472	-2.6	2.0	-0.4	2.0	-2.7	-85.73
		479	-2.4	1.5	0.2	1.5	-2.4	-88.54
		478	-1.8	0.8	0.2	0.8	-1.8	-88.31
	Min	Cent	-5.5	-3.0	-1.2	-3.0	-5.8	-78.97
		471	-4.7	-3.5	-1.4	-3.3	-5.4	-65.27
		472	-6.4	-2.5	-1.4	-2.3	-6.6	-79.66
		479	-6.5	-2.6	-1.0	-2.6	-6.5	-86.80
		478	-4.8	-3.6	-1.0	-3.5	-5.3	-75.95

		NODE	Vxx	Vyy
	Max	Cent	4.3	1.4
		471	4.2	1.7
		472	4.2	1.1
		479	4.5	1.1
		478	4.5	1.7
	Min	Cent	0.4	-1.2
		471	0.5	-1.6
		472	0.5	-0.9
		479	0.4	-0.9
		478	0.4	-1.6

LC		NODE	Fxx	Fyy	Fxy	Fmax	Fmin	ANGLE
RC ENV~2	Max	Cent	-0.3	1.0	-0.1	1.1	-0.4	-84.86
		471	-0.2	1.1	-0.1	1.2	-0.2	-83.21
		472	-0.2	0.9	-0.1	1.0	-0.2	-83.90
		479	-0.4	0.9	-0.1	0.9	-0.5	-85.06
		478	-0.4	1.1	-0.1	1.2	-0.5	-84.47
	Min	Cent	-0.7	0.6	-0.2	0.6	-0.8	-82.48
		471	-0.6	0.6	-0.2	0.7	-0.6	-83.46
		472	-0.6	0.5	-0.2	0.5	-0.6	-79.40
		479	-0.9	0.5	-0.2	0.5	-0.9	-81.63
		478	-0.9	0.6	-0.2	0.7	-0.9	-84.54

		NODE	Mxx	Myy	Mxy	Mmax	Mmin	ANGLE
	Max	Cent	-3.6	-0.4	-0.1	-0.3	-3.7	-80.78
		471	-3.1	-0.6	-0.3	-0.5	-3.2	-75.87
		472	-4.0	-0.0	-0.3	0.1	-4.2	-80.18
		479	-4.1	-0.1	0.1	-0.0	-4.1	-84.18
		478	-3.1	-0.7	0.1	-0.6	-3.1	-81.83
	Min	Cent	-4.1	-2.0	-0.8	-1.9	-4.3	-79.98
		471	-3.5	-2.4	-1.0	-2.2	-4.0	-70.74
		472	-4.8	-1.6	-1.0	-1.5	-4.9	-80.11
		479	-4.8	-1.7	-0.7	-1.7	-4.8	-86.71
		478	-3.6	-2.4	-0.7	-2.4	-3.9	-79.51

		NODE	Vxx	Vyy
	Max	Cent	3.1	0.6
		471	3.0	0.5
		472	3.0	0.6
		479	3.2	0.6

		478	3.2	0.5	
	Min	Cent	1.6	-0.4	
		471	1.6	-0.5	
		472	1.6	-0.3	
		479	1.5	-0.3	
		478	1.5	-0.5	

ELEM	MAT	SEC	LC		NODE	Fxx	Fyy	Fxy	Fmax	Fmin	ANGLE
432	1	1	SX (RS)		Cent	0.6	0.2	0.7	1.2	-0.3	38.33
					472	0.5	0.3	0.7	1.1	-0.4	41.06
					473	0.5	0.2	0.7	1.1	-0.4	39.50
					480	0.7	0.2	0.7	1.2	-0.3	34.95
					479	0.7	0.3	0.7	1.3	-0.3	36.39

		NODE	Mxx	Myy	Mxy	Mmax	Mmin	ANGLE
		Cent	1.9	0.4	0.4	2.1	0.3	15.44
		472	1.5	0.6	0.4	1.6	0.5	18.18
		473	2.3	0.4	0.4	2.4	0.3	12.84
		480	2.3	0.5	0.5	2.5	0.3	14.82
		479	1.7	0.5	0.5	1.9	0.3	17.99

		NODE	Vxx	Vyy
		Cent	1.7	0.6
		472	1.6	0.7
		473	1.6	0.6
		480	1.7	0.6
		479	1.7	0.7

LC		NODE	Fxx	Fyy	Fxy	Fmax	Fmin	ANGLE
SY (RS)		Cent	0.4	0.3	1.4	1.8	-1.1	44.54
		472	0.4	0.4	1.4	1.8	-1.0	44.67
		473	0.4	0.3	1.4	1.8	-1.1	43.25
		480	0.5	0.3	1.4	1.8	-1.1	43.06
		479	0.5	0.4	1.4	1.9	-1.0	44.48

		NODE	Mxx	Myy	Mxy	Mmax	Mmin	ANGLE
		Cent	0.6	1.8	0.4	1.9	0.5	74.20
		472	0.6	2.1	0.4	2.2	0.5	77.02
		473	0.6	2.0	0.4	2.1	0.5	73.23
		480	0.6	1.6	0.4	1.8	0.5	70.92
		479	0.6	1.6	0.3	1.7	0.5	74.21

		NODE	Vxx	Vyy
		Cent	0.2	0.8
		472	0.2	1.0
		473	0.2	0.7
		480	0.2	0.7
		479	0.2	1.0

LC		NODE	Fxx	Fyy	Fxy	Fmax	Fmin	ANGLE
RC ENV~1	Max	Cent	0.3	1.2	1.2	1.7	-0.0	54.56
		472	0.3	1.3	1.2	1.9	0.0	53.63
		473	0.3	1.1	1.2	1.8	-0.0	51.37
		480	0.3	1.1	1.2	1.7	-0.0	54.02
		479	0.3	1.3	1.2	1.8	0.0	56.16
	Min	Cent	-1.0	0.2	-1.7	0.7	-1.9	-76.42
		472	-0.7	0.2	-1.7	0.7	-1.9	-75.39
		473	-0.7	0.3	-1.7	0.6	-1.9	-73.91
		480	-1.3	0.3	-1.7	0.6	-2.1	-77.33
		479	-1.3	0.2	-1.7	0.7	-2.1	-78.30

		NODE	Mxx	Myy	Mxy	Mmax	Mmin	ANGLE
	Max	Cent	-2.5	1.8	-0.1	1.8	-2.5	-88.44
		472	-2.9	2.0	-0.2	2.0	-2.9	-87.71
		473	-2.2	2.2	-0.2	2.2	-2.2	-88.56
		480	-2.1	1.8	0.1	1.8	-2.1	-89.28
		479	-2.7	1.4	0.0	1.5	-2.7	-88.39
	Min	Cent	-7.4	-2.4	-1.2	-2.4	-7.4	-84.95

472	-7.1	-2.6	-1.3	-2.5	-7.2	-82.87
473	-7.7	-2.1	-1.2	-2.0	-7.7	-84.58
480	-7.6	-2.3	-1.1	-2.3	-7.7	-86.70
479	-7.0	-2.8	-1.2	-2.7	-7.1	-85.44

	NODE	Vxx	Vyy
Max	Cent	1.8	0.9
	472	1.8	1.1
	473	1.8	0.9
	480	1.8	0.9
	479	1.8	1.1
Min	Cent	-1.5	-0.7
	472	-1.5	-0.9
	473	-1.5	-0.6
	480	-1.6	-0.6
	479	-1.6	-0.9

LC		NODE	Fxx	Fyy	Fxy	Fmax	Fmin	ANGLE
RC ENV~2	Max	Cent	-0.2	0.9	-0.2	1.0	-0.3	-75.74
		472	-0.1	0.9	-0.2	1.1	-0.2	-74.19
		473	-0.1	0.8	-0.2	0.9	-0.2	-72.93
		480	-0.3	0.8	-0.2	0.9	-0.4	-77.04
		479	-0.3	0.9	-0.2	1.0	-0.4	-77.81
	Min	Cent	-0.7	0.5	-0.4	0.5	-0.8	-76.39
		472	-0.5	0.5	-0.4	0.6	-0.6	-75.29
		473	-0.5	0.4	-0.4	0.5	-0.6	-73.89
		480	-0.9	0.4	-0.4	0.5	-1.0	-77.34
		479	-0.9	0.5	-0.4	0.6	-1.0	-78.25

	NODE	Mxx	Myy	Mxy	Mmax	Mmin	ANGLE
Max	Cent	-4.4	0.0	-0.1	0.1	-4.5	-82.61
	472	-4.4	-0.1	-0.2	0.0	-4.5	-81.71
	473	-4.3	0.2	-0.2	0.3	-4.5	-82.16
	480	-4.3	0.2	-0.0	0.2	-4.4	-83.48
	479	-4.4	-0.1	-0.0	-0.1	-4.5	-83.14
Min	Cent	-5.5	-1.6	-0.9	-1.5	-5.5	-84.86
	472	-5.3	-1.7	-0.9	-1.6	-5.3	-82.97
	473	-5.7	-1.3	-0.9	-1.3	-5.7	-84.45
	480	-5.7	-1.5	-0.8	-1.4	-5.7	-86.47
	479	-5.3	-1.8	-0.8	-1.8	-5.3	-85.38

	NODE	Vxx	Vyy
Max	Cent	1.0	0.6
	472	1.0	0.6
	473	1.0	0.6
	480	1.0	0.6
	479	1.0	0.6
Min	Cent	-0.3	-0.2
	472	-0.3	-0.3
	473	-0.3	-0.2
	480	-0.4	-0.2
	479	-0.4	-0.3

ELEM	MAT	SEC	LC		NODE	Fxx	Fyy	Fxy	Fmax	Fmin	ANGLE
433	1	1	SX (RS)		Cent	0.7	0.2	0.7	1.2	-0.3	36.64
					473	0.6	0.2	0.7	1.2	-0.4	37.63
					474	0.6	0.3	0.7	1.2	-0.3	39.06
					481	0.8	0.3	0.7	1.3	-0.3	34.99
					480	0.8	0.2	0.7	1.3	-0.3	33.68

	NODE	Mxx	Myy	Mxy	Mmax	Mmin	ANGLE
	Cent	2.8	0.4	0.6	2.9	0.3	13.69
	473	2.4	0.5	0.5	2.5	0.3	14.52
	474	3.1	0.4	0.6	3.3	0.2	12.24
	481	3.2	0.4	0.7	3.4	0.3	13.35
	480	2.5	0.5	0.6	2.6	0.3	15.84

	NODE	Vxx	Vyy
	Cent	1.5	0.6
	473	1.5	0.6

	474	1.5	0.6	
	481	1.6	0.6	
	480	1.6	0.6	

LC		NODE	Fxx	Fyy	Fxy	Fmax	Fmin	ANGLE
SY (RS)		Cent	0.3	0.2	1.5	1.7	-1.2	43.73
		473	0.3	0.3	1.5	1.7	-1.2	44.36
		474	0.3	0.2	1.5	1.7	-1.2	43.86
		481	0.4	0.2	1.5	1.8	-1.1	42.90
		480	0.4	0.3	1.5	1.8	-1.1	43.40

	NODE	Mxx	Myy	Mxy	Mmax	Mmin	ANGLE
	Cent	0.6	1.8	0.5	2.0	0.4	70.92
	473	0.6	2.0	0.5	2.1	0.4	72.62
	474	0.6	2.0	0.5	2.1	0.4	72.37
	481	0.6	1.6	0.5	1.8	0.4	68.65
	480	0.6	1.6	0.4	1.8	0.5	69.16

	NODE	Vxx	Vyy
	Cent	0.1	0.7
	473	0.1	0.7
	474	0.1	0.8
	481	0.1	0.8
	480	0.1	0.7

LC		NODE	Fxx	Fyy	Fxy	Fmax	Fmin	ANGLE
RC ENV~1	Max	Cent	0.4	1.1	1.1	1.8	0.2	-52.24
		473	0.5	1.2	1.1	1.8	0.2	-50.65
		474	0.5	1.1	1.1	1.8	0.2	-51.07
		481	0.4	1.1	1.1	1.7	0.2	-53.95
		480	0.4	1.2	1.1	1.6	0.2	-53.54
	Min	Cent	-1.0	0.3	-1.8	0.7	-2.0	-69.57
		473	-0.7	0.3	-1.8	0.7	-1.9	-67.53
		474	-0.7	0.3	-1.8	0.7	-1.9	-66.26
		481	-1.3	0.3	-1.8	0.6	-2.2	-71.32
		480	-1.3	0.3	-1.8	0.7	-2.2	-72.19

		NODE	Mxx	Myy	Mxy	Mmax	Mmin	ANGLE
	Max	Cent	-1.2	2.0	0.1	2.0	-1.2	-89.56
		473	-2.1	2.2	0.0	2.2	-2.1	-89.95
		474	-0.3	2.2	0.2	2.2	-0.3	89.75
		481	-0.2	1.8	0.2	1.8	-0.2	-89.10
		480	-2.0	1.8	0.1	1.8	-2.1	-88.99
	Min	Cent	-7.2	-2.2	-1.1	-2.2	-7.2	-86.10
		473	-7.8	-2.1	-1.1	-2.1	-7.8	-86.73
		474	-6.7	-2.1	-1.1	-2.1	-6.7	-86.71
		481	-6.6	-2.3	-1.2	-2.3	-6.8	-85.23
		480	-7.7	-2.3	-1.2	-2.3	-7.8	-85.62

		NODE	Vxx	Vyy
	Max	Cent	-0.4	0.9
		473	-0.5	0.9
		474	-0.5	0.9
		481	-0.4	0.9
		480	-0.4	0.9
	Min	Cent	-3.5	-0.7
		473	-3.4	-0.6
		474	-3.4	-0.8
		481	-3.6	-0.8
		480	-3.6	-0.6

LC		NODE	Fxx	Fyy	Fxy	Fmax	Fmin	ANGLE
RC ENV~2	Max	Cent	-0.1	0.8	-0.4	1.1	-0.3	-68.35
		473	0.0	0.8	-0.4	1.1	-0.2	-65.27
		474	0.0	0.8	-0.4	1.1	-0.2	-65.10
		481	-0.3	0.8	-0.4	1.0	-0.4	-70.86
		480	-0.3	0.8	-0.4	1.1	-0.4	-70.97
	Min	Cent	-0.7	0.4	-0.6	0.5	-0.9	-69.47
		473	-0.4	0.4	-0.6	0.6	-0.7	-67.31

474	-0.4	0.4	-0.6	0.5	-0.7	-66.26
481	-0.9	0.4	-0.6	0.5	-1.1	-71.32
480	-0.9	0.4	-0.6	0.6	-1.1	-72.03

	NODE	Mxx	Myy	Mxy	Mmax	Mmin	ANGLE
Max	Cent	-3.6	0.2	-0.1	0.3	-3.8	-82.12
	473	-4.3	0.2	-0.1	0.3	-4.4	-83.39
	474	-2.9	0.2	-0.1	0.3	-3.1	-81.63
	481	-2.8	0.3	-0.1	0.4	-3.1	-80.52
	480	-4.3	0.2	-0.2	0.3	-4.5	-82.53
Min	Cent	-5.3	-1.4	-0.8	-1.4	-5.3	-85.75
	473	-5.8	-1.3	-0.8	-1.3	-5.8	-86.43
	474	-4.9	-1.3	-0.8	-1.3	-4.9	-86.22
	481	-4.8	-1.4	-0.9	-1.4	-4.8	-84.85
	480	-5.7	-1.5	-0.9	-1.4	-5.7	-85.41

	NODE	Vxx	Vyy
Max	Cent	-1.5	0.6
	473	-1.5	0.6
	474	-1.5	0.6
	481	-1.5	0.6
	480	-1.5	0.6
Min	Cent	-2.6	-0.2
	473	-2.5	-0.2
	474	-2.5	-0.3
	481	-2.6	-0.3
	480	-2.6	-0.2

ELEM	MAT	SEC	LC	NODE	Fxx	Fyy	Fxy	Fmax	Fmin	ANGLE
434	1	1	SX (RS)	Cent	0.6	0.3	0.7	1.2	-0.3	39.27
				474	0.5	0.3	0.7	1.1	-0.3	39.33
				475	0.5	0.4	0.7	1.2	-0.3	41.56
				482	0.7	0.4	0.7	1.3	-0.2	38.27
				481	0.7	0.3	0.7	1.2	-0.3	36.14

	NODE	Mxx	Myy	Mxy	Mmax	Mmin	ANGLE
	Cent	3.5	0.4	0.8	3.7	0.2	13.88
	474	3.3	0.4	0.7	3.4	0.2	13.88
	475	3.7	0.3	0.9	3.9	0.1	13.87
	482	3.8	0.4	0.9	4.0	0.2	13.98
	481	3.3	0.5	0.8	3.5	0.3	14.23

	NODE	Vxx	Vyy
	Cent	0.9	0.5
	474	0.8	0.6
	475	0.8	0.5
	482	1.0	0.5
	481	1.0	0.6

LC	NODE	Fxx	Fyy	Fxy	Fmax	Fmin	ANGLE
SY (RS)	Cent	0.2	0.3	1.6	1.9	-1.3	45.39
	474	0.3	0.2	1.6	1.9	-1.4	44.20
	475	0.3	0.4	1.6	2.0	-1.3	46.20
	482	0.3	0.4	1.6	2.0	-1.3	46.20
	481	0.3	0.2	1.6	1.9	-1.4	44.20

	NODE	Mxx	Myy	Mxy	Mmax	Mmin	ANGLE
	Cent	0.5	1.8	0.4	1.9	0.4	72.73
	474	0.5	2.0	0.5	2.1	0.4	73.84
	475	0.5	2.1	0.4	2.2	0.4	75.81
	482	0.5	1.5	0.4	1.7	0.3	70.79
	481	0.6	1.6	0.4	1.8	0.4	68.71

	NODE	Vxx	Vyy
	Cent	0.2	0.9
	474	0.1	0.8
	475	0.1	1.1
	482	0.3	1.1
	481	0.3	0.8

LC		NODE	Fxx	Fyy	Fxy	Fmax	Fmin	ANGLE
RC ENV~1	Max	Cent	0.4	1.2	1.1	2.0	0.3	-50.50
		474	0.4	1.1	1.1	2.1	0.3	-50.32
		475	0.4	1.3	1.1	2.0	0.3	-49.44
		482	0.3	1.3	1.1	1.9	0.3	-50.98
		481	0.3	1.1	1.1	2.0	0.2	-51.84
	Min	Cent	-0.9	0.3	-2.1	0.7	-2.2	-66.21
		474	-0.7	0.3	-2.1	0.7	-2.2	-63.65
		475	-0.7	0.2	-2.1	0.8	-2.2	-64.57
		482	-1.2	0.2	-2.1	0.8	-2.3	-68.42
		481	-1.2	0.3	-2.1	0.7	-2.3	-67.70

		NODE	Mxx	Myy	Mxy	Mmax	Mmin	ANGLE
	Max	Cent	1.4	2.0	0.4	2.0	0.5	-89.69
		474	0.0	2.2	0.4	2.2	-0.1	89.03
		475	2.6	2.3	0.5	2.7	0.4	13.87
		482	2.8	1.8	0.4	2.9	0.6	9.37
		481	0.2	1.9	0.2	1.9	0.1	-88.40
	Min	Cent	-5.6	-2.2	-1.3	-2.2	-5.9	-86.41
		474	-6.5	-2.0	-1.1	-2.0	-6.7	-89.34
		475	-4.8	-2.4	-1.2	-2.2	-5.1	85.44
		482	-4.8	-2.5	-1.4	-2.4	-5.2	-67.26
		481	-6.5	-2.2	-1.3	-2.2	-6.8	-84.43

		NODE	Vxx	Vyy
	Max	Cent	-3.0	0.9
		474	-3.0	0.9
		475	-3.0	1.0
		482	-3.0	1.0
		481	-3.0	0.9
	Min	Cent	-6.3	-1.0
		474	-6.1	-0.8
		475	-6.1	-1.2
		482	-6.5	-1.2
		481	-6.5	-0.8

LC		NODE	Fxx	Fyy	Fxy	Fmax	Fmin	ANGLE
RC ENV~2	Max	Cent	-0.1	0.9	-0.4	1.2	-0.3	-65.48
		474	0.0	0.8	-0.4	1.2	-0.2	-62.49
		475	0.0	0.9	-0.4	1.3	-0.2	-63.64
		482	-0.2	0.9	-0.4	1.2	-0.4	-68.01
		481	-0.2	0.8	-0.4	1.2	-0.4	-67.13
	Min	Cent	-0.6	0.4	-0.8	0.6	-1.0	-66.25
		474	-0.4	0.4	-0.8	0.6	-0.8	-63.63
		475	-0.4	0.4	-0.8	0.7	-0.8	-64.71
		482	-0.8	0.4	-0.8	0.6	-1.1	-68.50
		481	-0.8	0.4	-0.8	0.6	-1.1	-67.66

		NODE	Mxx	Myy	Mxy	Mmax	Mmin	ANGLE
	Max	Cent	-1.3	0.3	-0.0	0.4	-1.8	-77.18
		474	-2.6	0.3	0.0	0.3	-2.8	-82.59
		475	-0.2	0.2	0.1	0.3	-1.0	-71.62
		482	-0.0	0.3	-0.1	0.6	-1.0	-35.88
		481	-2.5	0.3	-0.2	0.4	-2.9	-79.40
	Min	Cent	-3.6	-1.4	-0.8	-1.4	-3.6	-85.31
		474	-4.7	-1.2	-0.7	-1.2	-4.7	-88.55
		475	-2.6	-1.5	-0.6	-1.4	-2.6	89.65
		482	-2.4	-1.5	-0.8	-1.4	-2.4	-69.78
		481	-4.6	-1.4	-0.9	-1.3	-4.6	-84.00

		NODE	Vxx	Vyy
	Max	Cent	-3.7	0.6
		474	-3.7	0.6
		475	-3.7	0.6
		482	-3.7	0.6
		481	-3.7	0.6
	Min	Cent	-4.7	-0.3
		474	-4.5	-0.3
		475	-4.5	-0.4
		482	-4.9	-0.4

			481	-4.9	-0.3

ELEM	MAT	SEC	LC		NODE	Fxx	Fyy	Fxy	Fmax	Fmin	ANGLE
435	1	1	SX	(RS)	Cent	0.5	0.4	0.6	1.1	-0.2	42.07
					475	0.5	0.4	0.6	1.1	-0.2	41.91
					476	0.5	0.5	0.6	1.1	-0.2	44.33
					483	0.7	0.5	0.6	1.2	-0.1	40.90
					482	0.7	0.4	0.6	1.2	-0.2	38.55

	NODE	Mxx	Myy	Mxy	Mmax	Mmin	ANGLE
	Cent	3.6	0.5	1.1	4.0	0.1	17.44
	475	3.6	0.3	1.1	4.0	0.0	16.30
	476	3.5	0.5	1.2	3.9	0.1	19.48
	483	3.7	0.7	1.2	4.1	0.3	18.91
	482	3.8	0.4	1.0	4.1	0.1	15.42

	NODE	Vxx	Vyy
	Cent	0.4	0.4
	475	0.4	0.5
	476	0.4	0.4
	483	0.4	0.4
	482	0.4	0.5

LC		NODE	Fxx	Fyy	Fxy	Fmax	Fmin	ANGLE
SY	(RS)	Cent	0.2	0.6	1.6	1.9	-1.2	48.63
		475	0.3	0.4	1.6	1.9	-1.2	46.19
		476	0.3	0.7	1.6	2.1	-1.1	48.82
		483	0.2	0.7	1.6	2.0	-1.2	49.98
		482	0.2	0.4	1.6	1.9	-1.3	47.38

	NODE	Mxx	Myy	Mxy	Mmax	Mmin	ANGLE
	Cent	0.4	1.8	0.3	1.9	0.3	77.47
	475	0.4	2.1	0.4	2.1	0.3	77.88
	476	0.5	2.2	0.3	2.3	0.4	80.57
	483	0.3	1.4	0.3	1.5	0.2	76.47
	482	0.4	1.5	0.4	1.6	0.3	72.63

	NODE	Vxx	Vyy
	Cent	0.3	1.3
	475	0.1	1.1
	476	0.1	1.5
	483	0.5	1.5
	482	0.5	1.1

LC		NODE	Fxx	Fyy	Fxy	Fmax	Fmin	ANGLE
RC ENV~1	Max	Cent	0.3	1.4	1.1	1.9	0.2	-49.04
		475	0.3	1.3	1.1	2.0	0.3	-49.60
		476	0.3	1.5	1.1	2.1	0.3	60.94
		483	0.3	1.5	1.1	2.0	0.2	64.10
		482	0.3	1.3	1.1	1.9	0.2	-50.28
	Min	Cent	-0.9	0.2	-2.1	0.9	-2.2	-67.64
		475	-0.7	0.2	-2.1	0.8	-2.2	-64.31
		476	-0.7	0.1	-2.1	1.0	-2.2	-66.89
		483	-1.2	0.1	-2.1	0.9	-2.3	-70.34
		482	-1.2	0.2	-2.1	0.8	-2.2	-68.35

	NODE	Mxx	Myy	Mxy	Mmax	Mmin	ANGLE
Max	Cent	4.4	2.1	0.8	4.5	1.1	11.82
	475	2.8	2.3	0.8	3.1	0.4	17.39
	476	5.5	2.5	1.0	5.7	2.4	11.75
	483	6.0	1.9	0.8	6.1	1.9	8.99
	482	3.2	1.8	0.5	3.3	0.6	12.08
Min	Cent	-2.9	-2.3	-1.4	-0.8	-3.5	59.27
	475	-4.4	-2.3	-1.3	-2.0	-4.8	67.32
	476	-1.5	-2.4	-1.4	0.7	-2.4	-57.14
	483	-1.4	-2.4	-1.5	0.8	-2.4	-55.04
	482	-4.4	-2.3	-1.5	-2.2	-4.9	-42.85

	NODE	Vxx	Vyy
Max	Cent	-4.8	1.2
	475	-4.7	1.0
	476	-4.7	1.4
	483	-4.7	1.4
	482	-4.7	1.0
Min	Cent	-7.8	-1.4
	475	-7.6	-1.2
	476	-7.6	-1.7
	483	-7.9	-1.7
	482	-7.9	-1.2

LC		NODE	Fxx	Fyy	Fxy	Fmax	Fmin	ANGLE
RC ENV~2	Max	Cent	-0.1	1.0	-0.4	1.3	-0.3	-66.38
		475	0.0	0.9	-0.4	1.3	-0.2	-63.32
		476	0.0	1.1	-0.4	1.4	-0.2	-64.87
		483	-0.2	1.1	-0.4	1.4	-0.4	-68.94
		482	-0.2	0.9	-0.4	1.3	-0.4	-67.76
	Min	Cent	-0.6	0.5	-0.8	0.7	-0.9	-67.76
		475	-0.4	0.4	-0.8	0.7	-0.8	-64.49
		476	-0.4	0.6	-0.8	0.8	-0.7	-67.05
		483	-0.8	0.6	-0.8	0.7	-1.1	-70.41
		482	-0.8	0.4	-0.8	0.6	-1.1	-68.43

	NODE	Mxx	Myy	Mxy	Mmax	Mmin	ANGLE
Max	Cent	1.8	0.3	0.2	1.9	0.1	-13.65
	475	0.2	0.3	0.3	0.5	-0.7	-28.79
	476	3.1	0.3	0.4	3.1	0.3	-6.47
	483	3.6	0.5	0.2	3.6	0.4	-6.02
	482	0.4	0.3	-0.0	0.8	-0.6	-29.61
Min	Cent	-0.5	-1.4	-0.6	-0.5	-1.5	83.08
	475	-2.2	-1.4	-0.5	-1.3	-2.2	76.24
	476	0.9	-1.5	-0.4	0.9	-1.5	7.97
	483	1.1	-1.5	-0.6	1.1	-1.5	-1.83
	482	-2.0	-1.4	-0.7	-1.4	-2.0	-62.92

	NODE	Vxx	Vyy
Max	Cent	-5.1	0.5
	475	-5.0	0.6
	476	-5.0	0.5
	483	-5.2	0.5
	482	-5.2	0.6
Min	Cent	-5.8	-0.5
	475	-5.7	-0.4
	476	-5.7	-0.6
	483	-6.0	-0.6
	482	-6.0	-0.4

ELEM	MAT	SEC	LC		NODE	Fxx	Fyy	Fxy	Fmax	Fmin	ANGLE
436	1	1	SX (RS)		Cent	0.3	0.6	0.5	1.0	-0.1	52.35
					476	0.3	0.5	0.5	0.9	-0.2	50.17
					199	0.3	0.7	0.5	1.1	-0.1	57.22
					202	0.4	0.7	0.5	1.1	0.0	54.61
					483	0.4	0.5	0.5	0.9	-0.1	47.19

	NODE	Mxx	Myy	Mxy	Mmax	Mmin	ANGLE
	Cent	2.9	0.8	1.4	3.5	0.1	26.33
	476	3.2	0.5	1.3	3.8	-0.1	22.32
	199	2.4	0.9	1.4	3.2	0.0	31.21
	202	2.4	1.1	1.4	3.3	0.3	32.32
	483	3.4	0.6	1.3	3.9	0.1	21.48

	NODE	Vxx	Vyy
	Cent	1.8	0.4
	476	1.7	0.4
	199	1.7	0.5
	202	2.0	0.5
	483	2.0	0.4

LC		NODE	Fxx	Fyy	Fxy	Fmax	Fmin	ANGLE
SY (RS)		Cent	0.1	0.8	1.1	1.6	-0.7	54.24
		476	0.3	0.7	1.1	1.7	-0.6	49.49
		199	0.3	1.0	1.1	1.8	-0.5	52.58
		202	0.3	1.0	1.1	1.8	-0.6	53.59
		483	0.3	0.7	1.1	1.6	-0.7	50.55

		NODE	Mxx	Myy	Mxy	Mmax	Mmin	ANGLE
		Cent	0.2	1.8	0.2	1.8	0.2	83.32
		476	0.4	2.2	0.2	2.2	0.3	83.22
		199	0.4	2.3	0.2	2.3	0.4	84.20
		202	0.2	1.4	0.2	1.4	0.2	81.97
		483	0.2	1.4	0.2	1.5	0.2	80.20

		NODE	Vxx	Vyy
		Cent	0.2	1.7
		476	0.1	1.5
		199	0.1	1.8
		202	0.5	1.8
		483	0.5	1.5

LC		NODE	Fxx	Fyy	Fxy	Fmax	Fmin	ANGLE
RC ENV~1	Max	Cent	0.1	1.7	0.8	1.9	0.0	70.39
		476	0.1	1.5	0.8	1.8	0.0	66.04
		199	0.1	1.9	0.8	2.1	0.0	69.49
		202	0.1	1.9	0.8	2.1	0.1	70.64
		483	0.1	1.5	0.8	1.8	0.1	67.52
	Min	Cent	-0.7	0.0	-1.5	0.9	-1.6	-57.24
		476	-0.6	0.1	-1.5	0.9	-1.8	-70.22
		199	-0.6	-0.0	-1.5	0.8	-1.8	-54.85
		202	-0.8	-0.0	-1.5	0.7	-1.8	-57.22
		483	-0.8	0.1	-1.5	0.9	-1.7	-59.37

		NODE	Mxx	Myy	Mxy	Mmax	Mmin	ANGLE
	Max	Cent	6.9	2.5	1.3	7.2	2.5	12.41
		476	5.4	2.6	1.2	5.7	2.5	13.99
		199	8.7	3.2	1.4	8.7	3.2	0.47
		202	9.1	2.3	1.3	9.1	2.3	0.38
		483	6.0	1.9	1.1	6.2	1.9	12.30
	Min	Cent	1.2	-2.0	-1.5	2.1	-2.1	-33.04
		476	-1.0	-2.3	-1.5	1.0	-2.3	-52.99
		199	3.2	-1.6	-1.4	3.8	-1.7	-20.69
		202	3.3	-2.0	-1.4	3.8	-2.0	-19.74
		483	-0.9	-2.3	-1.5	1.0	-2.4	-51.83

		NODE	Vxx	Vyy
	Max	Cent	-3.9	1.5
		476	-4.1	1.4
		199	-4.1	1.7
		202	-3.6	1.7
		483	-3.6	1.4
	Min	Cent	-8.6	-1.8
		476	-8.8	-1.7
		199	-8.8	-1.9
		202	-8.3	-1.9
		483	-8.3	-1.7

LC		NODE	Fxx	Fyy	Fxy	Fmax	Fmin	ANGLE
RC ENV~2	Max	Cent	-0.2	1.2	-0.3	1.4	-0.3	-72.57
		476	-0.1	1.1	-0.3	1.3	-0.3	-69.41
		199	-0.1	1.4	-0.3	1.5	-0.3	-73.14
		202	-0.2	1.4	-0.3	1.5	-0.4	-74.05
		483	-0.2	1.1	-0.3	1.3	-0.3	-70.87
	Min	Cent	-0.5	0.6	-0.6	0.7	-0.7	-68.62
		476	-0.4	0.6	-0.6	0.7	-0.6	-70.59
		199	-0.4	0.6	-0.6	0.7	-0.6	-67.41
		202	-0.5	0.6	-0.6	0.7	-0.7	-69.15
		483	-0.5	0.6	-0.6	0.7	-0.7	-71.69

	NODE	Mxx	Myy	Mxy	Mmax	Mmin	ANGLE

Max	Cent	5.1	0.7	0.6	5.1	0.7	-0.47
	476	3.3	0.4	0.6	3.3	0.4	-1.68
	199	6.5	0.9	0.7	6.5	0.9	0.34
	202	6.8	1.0	0.6	6.8	1.0	0.19
	483	3.8	0.5	0.5	3.8	0.5	-1.81
Min	Cent	3.1	-1.2	-0.3	3.1	-1.2	4.04
	476	1.2	-1.4	-0.4	1.2	-1.4	9.54
	199	4.9	-0.9	-0.2	4.9	-0.9	4.19
	202	5.0	-1.1	-0.2	5.0	-1.1	2.31
	483	1.4	-1.4	-0.4	1.4	-1.4	3.36

	NODE	Vxx	Vyy
Max	Cent	-5.3	0.6
	476	-5.4	0.5
	199	-5.4	0.7
	202	-5.2	0.7
	483	-5.2	0.5
Min	Cent	-6.4	-0.4
	476	-6.6	-0.6
	199	-6.6	-0.3
	202	-6.3	-0.3
	483	-6.3	-0.6

ELEM	MAT	SEC	LC	NODE	Fxx	Fyy	Fxy	Fmax	Fmin	ANGLE
437	1	1	SX (RS)	Cent	0.2	0.2	0.6	0.8	-0.4	44.02
				432	0.1	0.0	0.6	0.6	-0.5	43.46
				477	0.1	0.3	0.6	0.8	-0.4	50.81
				484	0.4	0.3	0.6	1.0	-0.2	42.50
				440	0.4	0.0	0.6	0.8	-0.4	35.43

	NODE	Mxx	Myy	Mxy	Mmax	Mmin	ANGLE
	Cent	1.1	0.2	1.3	2.0	-0.7	35.02
	432	0.1	0.0	1.4	1.5	-1.4	43.97
	477	0.9	0.7	0.9	1.7	-0.0	41.74
	484	1.8	0.4	1.1	2.4	-0.2	29.52
	440	2.0	0.4	1.7	3.1	-0.7	32.59

	NODE	Vxx	Vyy
	Cent	1.2	0.2
	432	2.1	0.0
	477	2.1	0.3
	484	0.9	0.3
	440	0.9	0.0

LC	NODE	Fxx	Fyy	Fxy	Fmax	Fmin	ANGLE
SY (RS)	Cent	0.3	1.2	0.6	1.5	-0.0	62.04
	432	0.4	1.4	0.6	1.7	0.1	64.08
	477	0.4	1.0	0.6	1.4	-0.0	56.86
	484	0.4	1.0	0.6	1.4	-0.0	57.24
	440	0.4	1.4	0.6	1.7	0.1	64.36

	NODE	Mxx	Myy	Mxy	Mmax	Mmin	ANGLE
	Cent	1.3	0.9	0.3	1.4	0.7	26.50
	432	1.0	1.7	0.1	1.7	1.0	82.31
	477	0.8	1.5	0.3	1.7	0.7	67.95
	484	1.5	0.8	0.4	1.7	0.6	27.04
	440	1.9	0.8	0.2	2.0	0.7	9.13

	NODE	Vxx	Vyy
	Cent	0.7	3.3
	432	0.5	3.3
	477	0.5	3.2
	484	0.9	3.2
	440	0.9	3.3

LC		NODE	Fxx	Fyy	Fxy	Fmax	Fmin	ANGLE
RC ENV~1	Max	Cent	-0.3	2.1	0.6	2.2	-0.4	76.14

```
                                   432       -0.1        2.3        0.6        2.4       -0.3      76.59
                                   477       -0.1        1.9        0.6        2.0       -0.3      73.85
                                   484       -0.2        1.9        0.6        2.0       -0.4      74.85
                                   440       -0.2        2.3        0.6        2.4       -0.4      77.31
                            Min   Cent       -1.8       -0.3       -0.7        0.1       -1.8     -57.17
                                   432       -1.6       -0.5       -0.7       -0.0       -1.6     -53.64
                                   477       -1.6       -0.1       -0.7        0.3       -1.6     -60.73
                                   484       -2.0       -0.1       -0.7        0.2       -2.0     -62.51
                                   440       -2.0       -0.5       -0.7       -0.1       -2.0     -55.90

                                  NODE        Mxx        Myy        Mxy       Mmax       Mmin      ANGLE
                            ---- ------ ---------- ---------- ---------- ---------- ---------- ----------
                            Max   Cent        2.3        0.1        1.3        2.3        0.0       2.14
                                   432        1.3       -0.0        1.2        1.4       -0.0      -3.86
                                   477        0.3        0.2        0.9        0.5       -0.6      40.60
                                   484        2.5        1.0        1.4        2.6        0.3      12.70
                                   440        4.9        0.7        1.7        4.9        0.7      -1.61
                            Min   Cent       -1.8       -3.4       -1.2       -1.4       -3.4     -55.92
                                   432       -1.7       -5.2       -1.6       -1.7       -5.3      -9.26
                                   477       -2.1       -4.7       -0.8       -1.9       -4.7     -16.91
                                   484       -2.3       -2.1       -0.9       -1.0       -2.6     -72.49
                                   440       -1.5       -2.2       -1.7       -0.7       -2.8     -74.23

                                  NODE        Vxx        Vyy
                            ---- ------ ---------- ----------
                            Max   Cent        3.2        0.6
                                   432        3.1        0.5
                                   477        3.1        0.7
                                   484        4.4        0.7
                                   440        4.4        0.5
                            Min   Cent        0.3       -6.7
                                   432       -1.0       -7.1
                                   477       -1.0       -6.3
                                   484        0.9       -6.3
                                   440        0.9       -7.1


                       LC         NODE        Fxx        Fyy        Fxy       Fmax       Fmin      ANGLE
                -------- ---- ------ ---------- ---------- ---------- ---------- ---------- ----------
                RC ENV~2  Max   Cent       -0.4        1.4       -0.0        1.4       -0.4     -89.32
                                   432       -0.4        1.5       -0.0        1.5       -0.4     -89.29
                                   477       -0.4        1.4       -0.0        1.4       -0.4     -88.30
                                   484       -0.4        1.4       -0.0        1.4       -0.4     -88.44
                                   440       -0.4        1.5       -0.0        1.5       -0.4     -89.37
                            Min   Cent       -1.3        0.8       -0.1        0.8       -1.3     -87.06
                                   432       -1.1        0.8       -0.1        0.8       -1.1     -86.57
                                   477       -1.1        0.8       -0.1        0.8       -1.1     -88.80
                                   484       -1.4        0.8       -0.1        0.8       -1.4     -88.95
                                   440       -1.4        0.8       -0.1        0.8       -1.4     -86.72

                                  NODE        Mxx        Myy        Mxy       Mmax       Mmin      ANGLE
                            ---- ------ ---------- ---------- ---------- ---------- ---------- ----------
                            Max   Cent        1.4       -0.7        0.2        1.4       -0.7       2.61
                                   432        0.8       -1.7       -0.2        0.8       -1.7      -3.86
                                   477        0.1       -1.3        0.3        0.1       -1.3       6.21
                                   484        1.6        0.2        0.6        1.7       -0.3      14.84
                                   440        3.3        0.1        0.0        3.3        0.1      -1.31
                            Min   Cent       -0.8       -2.3       -0.3       -0.7       -2.3     -14.64
                                   432       -0.8       -3.6       -0.6       -0.7       -3.7     -12.92
                                   477       -1.4       -3.2       -0.3       -1.4       -3.2     -21.81
                                   484       -0.9       -1.3       -0.1       -0.7       -1.3     -13.39
                                   440        0.0       -1.4       -0.5        0.1       -1.4     -10.74

                                  NODE        Vxx        Vyy
                            ---- ------ ---------- ----------
                            Max   Cent        2.3       -2.4
                                   432        1.7       -2.6
                                   477        1.7       -2.2
                                   484        3.1       -2.2
                                   440        3.1       -2.6
                            Min   Cent        1.4       -4.8
                                   432        1.0       -5.1
                                   477        1.0       -4.6
                                   484        1.8       -4.6
                                   440        1.8       -5.1


  ELEM    MAT    SEC         LC         NODE        Fxx        Fyy        Fxy       Fmax       Fmin      ANGLE
------ ------ ------ -------- ---- ------ ---------- ---------- ---------- ---------- ---------- ----------
```

```
438      1      1       SX (RS)   Cent        0.4        0.4        0.5        0.9       -0.2      44.14
                                   477        0.4        0.3        0.5        0.9       -0.2      44.07
                                   478        0.4        0.4        0.5        0.9       -0.2      45.94
                                   485        0.4        0.4        0.5        0.9       -0.1      44.29
                                   484        0.4        0.3        0.5        0.9       -0.2      42.43

                                  NODE        Mxx        Myy        Mxy       Mmax       Mmin      ANGLE
                             ---- ------ ---------- ---------- ---------- ---------- ---------- ----------
                                  Cent        1.7        0.4        0.5        1.9        0.2      19.26
                                   477        1.1        0.7        0.7        1.6        0.1      37.68
                                   478        1.4        0.7        0.4        1.6        0.5      25.27
                                   485        2.5        0.6        0.4        2.6        0.5      11.14
                                   484        2.0        0.4        0.6        2.2        0.2      18.65

                                  NODE        Vxx        Vyy
                             ---- ------ ---------- ----------
                                  Cent        1.0        1.0
                                   477        0.9        0.3
                                   478        0.9        1.6
                                   485        1.1        1.6
                                   484        1.1        0.3


                        LC        NODE        Fxx        Fyy        Fxy       Fmax       Fmin      ANGLE
                   -------- ---- ------ ---------- ---------- ---------- ---------- ---------- ----------
                        SY (RS)   Cent        0.4        0.6        1.5        2.0       -1.0      47.59
                                   477        0.4        1.0        1.5        2.2       -0.8      50.50
                                   478        0.4        0.4        1.5        1.9       -1.1      45.03
                                   485        0.3        0.4        1.5        1.9       -1.1      46.34
                                   484        0.3        1.0        1.5        2.2       -0.9      51.75

                                  NODE        Mxx        Myy        Mxy       Mmax       Mmin      ANGLE
                             ---- ------ ---------- ---------- ---------- ---------- ---------- ----------
                                  Cent        0.6        0.9        0.4        1.2        0.3      57.21
                                   477        0.8        1.5        0.4        1.7        0.6      63.89
                                   478        0.6        1.3        0.3        1.4        0.5      71.13
                                   485        0.6        0.7        0.3        0.9        0.4      53.56
                                   484        0.9        0.8        0.4        1.3        0.4      39.75

                                  NODE        Vxx        Vyy
                             ---- ------ ---------- ----------
                                  Cent        1.4        2.4
                                   477        0.9        3.2
                                   478        0.9        1.7
                                   485        1.9        1.7
                                   484        1.9        3.2


                        LC        NODE        Fxx        Fyy        Fxy       Fmax       Fmin      ANGLE
                   -------- ---- ------ ---------- ---------- ---------- ---------- ---------- ----------
                   RC ENV~1  Max   Cent       -0.2        1.8        1.4        2.3       -0.3      60.04
                                   477       -0.1        1.9        1.4        2.6       -0.3      62.05
                                   478       -0.1        1.7        1.4        2.1       -0.3      56.88
                                   485       -0.2        1.7        1.4        2.0       -0.4      59.28
                                   484       -0.2        1.9        1.4        2.6       -0.4      64.00
                             Min   Cent       -1.6        0.2       -1.6        0.7       -2.0     -69.61
                                   477       -1.4       -0.2       -1.6        0.8       -2.2     -69.31
                                   478       -1.4        0.3       -1.6        0.6       -2.0     -67.52
                                   485       -1.8        0.3       -1.6        0.6       -2.0     -69.88
                                   484       -1.8       -0.2       -1.6        0.7       -2.2     -71.38

                                  NODE        Mxx        Myy        Mxy       Mmax       Mmin      ANGLE
                             ---- ------ ---------- ---------- ---------- ---------- ---------- ----------
                             Max   Cent       -0.3        0.6        1.4        0.8       -1.0      72.55
                                   477       -0.5        0.1        0.8        0.4       -1.1      64.49
                                   478       -1.3        0.9        1.1        0.9       -1.5      82.04
                                   485       -0.4        1.1        1.8        1.4       -0.9      63.81
                                   484        1.6        0.8        1.6        2.4       -0.4      25.65
                             Min   Cent       -3.8       -2.9       -0.2       -2.7       -3.8      78.22
                                   477       -2.7       -4.8       -0.6       -2.4       -4.8     -14.60
                                   478       -4.1       -3.3       -0.4       -3.0       -4.2      66.28
                                   485       -5.4       -2.0        0.1       -2.0       -5.4      88.47
                                   484       -3.0       -2.2       -0.1       -1.6       -3.0       7.81

                                  NODE        Vxx        Vyy
                             ---- ------ ---------- ----------
                             Max   Cent        6.6        0.4
                                   477        5.0        0.7
                                   478        5.0        0.1
```

		485	8.3	0.1
		484	8.3	0.7
	Min	Cent	1.5	-5.3
		477	1.3	-6.3
		478	1.3	-4.4
		485	1.7	-4.4
		484	1.7	-6.3

LC		NODE	Fxx	Fyy	Fxy	Fmax	Fmin	ANGLE
RC ENV~2	Max	Cent	-0.5	1.3	-0.1	1.3	-0.5	-86.26
		477	-0.4	1.4	-0.1	1.4	-0.4	-87.42
		478	-0.4	1.3	-0.1	1.3	-0.4	-85.90
		485	-0.6	1.3	-0.1	1.3	-0.6	-86.37
		484	-0.6	1.4	-0.1	1.4	-0.6	-87.70
	Min	Cent	-1.2	0.7	-0.2	0.7	-1.2	-86.79
		477	-1.0	0.8	-0.2	0.8	-1.0	-84.37
		478	-1.0	0.7	-0.2	0.7	-1.0	-86.40
		485	-1.3	0.7	-0.2	0.7	-1.3	-86.82
		484	-1.3	0.8	-0.2	0.8	-1.3	-84.98

	NODE	Mxx	Myy	Mxy	Mmax	Mmin	ANGLE
Max	Cent	-1.0	-0.3	1.0	-0.2	-2.0	39.58
	477	-0.5	-1.3	0.6	-0.4	-1.7	12.27
	478	-2.3	-0.4	0.7	-0.4	-2.6	87.64
	485	-2.3	0.4	1.3	0.6	-2.9	78.15
	484	1.0	0.1	1.1	1.6	-1.0	28.56
Min	Cent	-2.4	-1.9	-0.0	-1.8	-2.4	78.86
	477	-1.9	-3.3	-0.2	-1.8	-3.3	-14.38
	478	-3.1	-2.2	-0.2	-2.0	-3.1	63.72
	485	-3.4	-1.2	0.1	-1.2	-3.4	86.80
	484	-1.4	-1.4	0.1	-1.1	-1.5	32.29

	NODE	Vxx	Vyy
Max	Cent	4.8	-1.7
	477	3.6	-2.2
	478	3.6	-1.1
	485	6.0	-1.1
	484	6.0	-2.2
Min	Cent	2.9	-3.8
	477	2.2	-4.6
	478	2.2	-3.1
	485	3.5	-3.1
	484	3.5	-4.6

ELEM	MAT	SEC	LC		NODE	Fxx	Fyy	Fxy	Fmax	Fmin	ANGLE
439	1	1	SX (RS)		Cent	0.8	0.3	0.5	1.1	-0.0	33.02
					478	0.5	0.4	0.5	1.0	-0.0	42.81
					479	0.5	0.2	0.5	0.9	-0.2	35.75
					486	1.0	0.2	0.5	1.3	-0.0	24.85
					485	1.0	0.4	0.5	1.3	0.2	29.73

	NODE	Mxx	Myy	Mxy	Mmax	Mmin	ANGLE
	Cent	1.7	0.4	0.5	1.9	0.3	18.28
	478	1.4	0.7	0.4	1.6	0.5	25.14
	479	1.7	0.5	0.5	1.9	0.3	19.17
	486	1.9	0.6	0.6	2.2	0.4	20.88
	485	2.2	0.5	0.5	2.3	0.4	14.66

	NODE	Vxx	Vyy
	Cent	1.7	1.3
	478	1.4	1.6
	479	1.4	1.0
	486	2.1	1.0
	485	2.1	1.6

LC		NODE	Fxx	Fyy	Fxy	Fmax	Fmin	ANGLE
SY (RS)		Cent	0.6	0.4	1.6	2.1	-1.1	43.18
		478	0.4	0.4	1.6	2.0	-1.1	45.04
		479	0.4	0.4	1.6	2.0	-1.1	45.23

486	0.8	0.4	1.6	2.2	-0.9	41.43
485	0.8	0.4	1.6	2.2	-0.9	41.24

NODE	Mxx	Myy	Mxy	Mmax	Mmin	ANGLE
Cent	0.5	1.1	0.2	1.2	0.5	72.82
478	0.6	1.3	0.2	1.4	0.5	75.56
479	0.6	1.5	0.2	1.5	0.5	76.07
486	0.7	1.2	0.3	1.3	0.6	62.44
485	0.4	0.7	0.2	0.8	0.3	62.05

NODE	Vxx	Vyy
Cent	0.7	1.2
478	0.5	1.7
479	0.5	0.7
486	0.9	0.7
485	0.9	1.7

LC		NODE	Fxx	Fyy	Fxy	Fmax	Fmin	ANGLE
RC ENV~1	Max	Cent	0.2	1.6	1.4	2.1	0.1	55.32
		478	0.1	1.7	1.4	2.1	-0.0	56.57
		479	0.1	1.5	1.4	2.1	-0.0	56.12
		486	0.4	1.5	1.4	2.2	0.2	54.11
		485	0.4	1.7	1.4	2.2	0.3	54.58
	Min	Cent	-1.5	0.3	-1.7	0.6	-2.3	-71.45
		478	-1.3	0.3	-1.7	0.6	-2.1	-67.40
		479	-1.3	0.2	-1.7	0.8	-2.1	-69.31
		486	-1.8	0.2	-1.7	0.7	-2.5	-74.62
		485	-1.8	0.3	-1.7	0.5	-2.5	-73.48

	NODE	Mxx	Myy	Mxy	Mmax	Mmin	ANGLE
Max	Cent	-2.1	1.2	1.1	1.2	-2.2	86.39
	478	-1.8	0.8	1.0	0.8	-1.9	85.69
	479	-2.4	1.5	0.7	1.5	-2.4	89.05
	486	-2.7	1.5	1.1	1.5	-2.8	86.07
	485	-1.2	0.9	1.4	1.0	-1.4	71.75
Min	Cent	-5.7	-2.4	-0.5	-2.4	-5.7	89.15
	478	-4.8	-3.5	-0.5	-3.3	-4.9	69.28
	479	-6.4	-2.4	-0.8	-2.4	-6.4	87.68
	486	-7.3	-2.1	-0.5	-2.1	-7.4	89.05
	485	-5.5	-2.1	-0.3	-2.1	-5.6	89.52

	NODE	Vxx	Vyy
Max	Cent	5.2	0.1
	478	4.5	0.1
	479	4.5	0.2
	486	6.0	0.2
	485	6.0	0.1
Min	Cent	0.3	-3.3
	478	0.4	-4.4
	479	0.4	-2.2
	486	0.2	-2.2
	485	0.2	-4.4

LC		NODE	Fxx	Fyy	Fxy	Fmax	Fmin	ANGLE
RC ENV~2	Max	Cent	-0.5	1.2	-0.1	1.2	-0.5	-83.00
		478	-0.4	1.3	-0.1	1.3	-0.4	-82.77
		479	-0.4	1.1	-0.1	1.1	-0.4	-82.25
		486	-0.6	1.1	-0.1	1.1	-0.6	-83.22
		485	-0.6	1.3	-0.1	1.3	-0.6	-83.62
	Min	Cent	-1.1	0.7	-0.3	0.7	-1.1	-83.94
		478	-0.9	0.7	-0.3	0.7	-0.9	-83.53
		479	-0.9	0.6	-0.3	0.6	-0.9	-83.09
		486	-1.3	0.6	-0.3	0.6	-1.3	-84.29
		485	-1.3	0.7	-0.3	0.7	-1.3	-84.60

	NODE	Mxx	Myy	Mxy	Mmax	Mmin	ANGLE
Max	Cent	-3.8	0.0	0.7	0.0	-3.8	89.77
	478	-3.0	-0.5	0.7	-0.5	-3.2	-89.88
	479	-4.1	0.1	0.4	0.1	-4.1	-87.18
	486	-4.6	0.4	0.8	0.4	-4.6	88.49

		485	-3.0	0.3	1.0	0.4	-3.3	82.67
	Min	Cent	-4.3	-1.5	-0.3	-1.5	-4.3	88.89
		478	-3.6	-2.3	-0.3	-2.2	-3.7	75.19
		479	-4.8	-1.5	-0.5	-1.5	-4.8	88.27
		486	-5.4	-1.3	-0.3	-1.3	-5.5	88.92
		485	-3.8	-1.3	-0.1	-1.3	-3.8	-87.58

		NODE	Vxx	Vyy
	Max	Cent	3.7	-0.7
		478	3.2	-1.1
		479	3.2	-0.3
		486	4.3	-0.3
		485	4.3	-1.1
	Min	Cent	1.7	-2.4
		478	1.5	-3.1
		479	1.5	-1.6
		486	1.9	-1.6
		485	1.9	-3.1

ELEM	MAT	SEC	LC		NODE	Fxx	Fyy	Fxy	Fmax	Fmin	ANGLE
440	1	1	SX (RS)		Cent	0.9	0.2	0.6	1.2	-0.1	28.25
					479	0.7	0.2	0.6	1.1	-0.2	32.22
					480	0.7	0.2	0.6	1.1	-0.2	32.15
					487	1.1	0.2	0.6	1.4	-0.1	24.62
					486	1.1	0.2	0.6	1.4	-0.1	24.67

	NODE	Mxx	Myy	Mxy	Mmax	Mmin	ANGLE
	Cent	2.0	0.5	0.6	2.3	0.3	19.69
	479	1.7	0.5	0.6	1.9	0.3	21.64
	480	2.3	0.5	0.6	2.5	0.3	16.65
	487	2.4	0.7	0.7	2.7	0.5	18.94
	486	1.9	0.6	0.6	2.1	0.4	22.42

	NODE	Vxx	Vyy
	Cent	1.8	0.9
	479	1.7	1.0
	480	1.7	0.8
	487	1.9	0.8
	486	1.9	1.0

LC		NODE	Fxx	Fyy	Fxy	Fmax	Fmin	ANGLE
SY (RS)		Cent	0.5	0.4	1.4	1.9	-1.0	43.41
		479	0.4	0.5	1.4	1.9	-1.0	45.19
		480	0.4	0.3	1.4	1.8	-1.1	43.24
		487	0.6	0.3	1.4	1.9	-1.0	41.49
		486	0.6	0.5	1.4	2.0	-0.9	43.42

	NODE	Mxx	Myy	Mxy	Mmax	Mmin	ANGLE
	Cent	0.6	1.4	0.4	1.5	0.4	67.22
	479	0.6	1.5	0.3	1.6	0.5	71.50
	480	0.6	1.6	0.4	1.7	0.5	69.97
	487	0.6	1.3	0.5	1.5	0.4	63.21
	486	0.6	1.1	0.4	1.3	0.4	62.89

	NODE	Vxx	Vyy
	Cent	0.1	0.7
	479	0.2	0.7
	480	0.2	0.6
	487	0.1	0.6
	486	0.1	0.7

LC		NODE	Fxx	Fyy	Fxy	Fmax	Fmin	ANGLE
RC ENV~1	Max	Cent	0.4	1.5	1.2	1.8	0.2	57.17
		479	0.3	1.5	1.2	1.9	0.2	57.81
		480	0.3	1.4	1.2	1.7	0.2	55.53
		487	0.5	1.4	1.2	1.7	0.3	56.36
		486	0.5	1.5	1.2	1.9	0.3	58.57
	Min	Cent	-1.6	0.3	-1.7	0.8	-2.2	-70.18

		479	-1.3	0.2	-1.7	0.9	-2.0	-77.97
		480	-1.3	0.4	-1.7	0.8	-2.0	-77.29
		487	-1.9	0.4	-1.7	0.8	-2.3	-72.38
		486	-1.9	0.2	-1.7	0.8	-2.3	-72.52

	NODE	Mxx	Myy	Mxy	Mmax	Mmin	ANGLE
Max	Cent	-2.5	1.6	0.3	1.6	-2.6	89.19
	479	-2.7	1.5	0.4	1.5	-2.8	89.31
	480	-2.1	1.8	0.2	1.8	-2.1	-89.65
	487	-2.3	1.7	0.3	1.7	-2.4	89.09
	486	-2.9	1.5	0.6	1.5	-2.9	88.08
Min	Cent	-7.5	-2.2	-1.0	-2.2	-7.5	-89.26
	479	-7.0	-2.5	-1.0	-2.5	-7.0	-89.95
	480	-7.6	-2.2	-1.2	-2.2	-7.6	-87.34
	487	-8.3	-2.2	-1.1	-2.1	-8.3	-85.70
	486	-7.4	-2.1	-0.9	-2.1	-7.4	-87.18

	NODE	Vxx	Vyy
Max	Cent	1.9	0.2
	479	1.8	0.2
	480	1.8	0.3
	487	2.1	0.3
	486	2.1	0.2
Min	Cent	-1.7	-1.8
	479	-1.6	-2.2
	480	-1.6	-1.4
	487	-1.8	-1.4
	486	-1.8	-2.2

LC		NODE	Fxx	Fyy	Fxy	Fmax	Fmin	ANGLE
RC ENV~2	Max	Cent	-0.5	1.1	-0.2	1.1	-0.5	-78.96
		479	-0.3	1.1	-0.2	1.2	-0.4	-78.02
		480	-0.3	1.0	-0.2	1.1	-0.4	-77.65
		487	-0.6	1.0	-0.2	1.1	-0.6	-79.76
		486	-0.6	1.1	-0.2	1.2	-0.6	-80.03
	Min	Cent	-1.1	0.6	-0.4	0.6	-1.2	-78.98
		479	-0.9	0.6	-0.4	0.7	-1.0	-78.00
		480	-0.9	0.6	-0.4	0.6	-1.0	-77.40
		487	-1.3	0.6	-0.4	0.6	-1.4	-79.81
		486	-1.3	0.6	-0.4	0.7	-1.4	-80.21

	NODE	Mxx	Myy	Mxy	Mmax	Mmin	ANGLE
Max	Cent	-4.5	0.3	0.2	0.3	-4.6	-85.55
	479	-4.4	0.0	0.3	0.0	-4.4	-85.74
	480	-4.3	0.3	0.0	0.3	-4.4	-83.91
	487	-4.6	0.5	0.1	0.5	-4.7	-86.19
	486	-4.7	0.4	0.4	0.4	-4.7	-88.14
Min	Cent	-5.6	-1.3	-0.7	-1.3	-5.6	-88.95
	479	-5.2	-1.6	-0.7	-1.6	-5.2	-89.53
	480	-5.6	-1.4	-0.8	-1.3	-5.6	-87.09
	487	-6.1	-1.3	-0.8	-1.3	-6.1	-85.93
	486	-5.5	-1.3	-0.6	-1.3	-5.5	-87.47

	NODE	Vxx	Vyy
Max	Cent	1.1	-0.2
	479	1.0	-0.3
	480	1.0	-0.0
	487	1.2	-0.0
	486	1.2	-0.3
Min	Cent	-0.4	-1.3
	479	-0.4	-1.6
	480	-0.4	-1.0
	487	-0.4	-1.0
	486	-0.4	-1.6

ELEM	MAT	SEC	LC		NODE	Fxx	Fyy	Fxy	Fmax	Fmin	ANGLE
441	1	1	SX (RS)		Cent	1.0	0.2	0.6	1.3	-0.1	27.52
					480	0.8	0.2	0.6	1.2	-0.2	31.29
					481	0.8	0.2	0.6	1.2	-0.2	32.19
					488	1.3	0.2	0.6	1.6	-0.1	24.29
					487	1.3	0.2	0.6	1.5	-0.1	23.67

	NODE	Mxx	Myy	Mxy	Mmax	Mmin	ANGLE
	Cent	2.8	0.6	0.7	3.1	0.4	16.45
	480	2.5	0.5	0.7	2.7	0.3	17.47
	481	3.2	0.5	0.7	3.4	0.3	14.19
	488	3.3	0.8	0.8	3.5	0.6	15.69
	487	2.5	0.7	0.7	2.7	0.5	19.56

	NODE	Vxx	Vyy
	Cent	1.7	0.8
	480	1.6	0.8
	481	1.6	0.8
	488	1.8	0.8
	487	1.8	0.8

LC		NODE	Fxx	Fyy	Fxy	Fmax	Fmin	ANGLE
SY (RS)		Cent	0.5	0.2	1.5	1.8	-1.2	41.81
		480	0.4	0.3	1.5	1.8	-1.1	43.72
		481	0.4	0.1	1.5	1.7	-1.3	41.77
		488	0.6	0.1	1.5	1.8	-1.2	39.84
		487	0.6	0.3	1.5	1.9	-1.0	41.77

	NODE	Mxx	Myy	Mxy	Mmax	Mmin	ANGLE
	Cent	0.6	1.4	0.5	1.6	0.4	65.35
	480	0.6	1.6	0.4	1.8	0.4	68.32
	481	0.6	1.5	0.5	1.7	0.4	68.25
	488	0.6	1.2	0.5	1.5	0.3	61.57
	487	0.6	1.3	0.5	1.5	0.4	62.35

	NODE	Vxx	Vyy
	Cent	0.1	0.6
	480	0.1	0.6
	481	0.1	0.6
	488	0.2	0.6
	487	0.2	0.6

LC		NODE	Fxx	Fyy	Fxy	Fmax	Fmin	ANGLE
RC ENV~1	Max	Cent	0.5	1.4	1.1	1.7	0.4	-56.43
		480	0.4	1.4	1.1	1.7	0.3	-53.97
		481	0.4	1.4	1.1	1.9	0.3	-55.46
		488	0.6	1.4	1.1	1.7	0.4	-58.77
		487	0.6	1.4	1.1	1.6	0.4	57.72
	Min	Cent	-1.7	0.5	-1.8	0.8	-2.3	-74.20
		480	-1.3	0.4	-1.8	0.9	-2.1	-72.69
		481	-1.3	0.5	-1.8	0.8	-2.1	-72.20
		488	-2.1	0.5	-1.8	0.8	-2.4	-75.49
		487	-2.1	0.4	-1.8	0.8	-2.5	-75.83

	NODE	Mxx	Myy	Mxy	Mmax	Mmin	ANGLE
Max	Cent	-1.2	1.8	0.1	1.8	-1.2	-88.35
	480	-2.0	1.8	0.2	1.8	-2.0	-89.20
	481	-0.1	1.9	0.1	1.9	-0.2	-87.50
	488	-0.2	1.9	0.1	1.9	-0.2	-87.43
	487	-2.3	1.7	0.1	1.7	-2.3	-89.10
Min	Cent	-7.3	-2.1	-1.4	-2.1	-7.3	-84.26
	480	-7.7	-2.2	-1.3	-2.2	-7.7	-86.04
	481	-6.6	-2.2	-1.5	-2.2	-6.8	-82.38
	488	-6.8	-2.0	-1.6	-1.9	-7.1	-80.23
	487	-8.3	-2.2	-1.4	-2.1	-8.3	-83.45

	NODE	Vxx	Vyy
Max	Cent	-0.4	0.2
	480	-0.4	0.3
	481	-0.4	0.1
	488	-0.4	0.1
	487	-0.4	0.3
Min	Cent	-3.8	-1.7
	480	-3.6	-1.4
	481	-3.6	-2.0

		488	-4.0	-2.0		
		487	-4.0	-1.4		

LC		NODE	Fxx	Fyy	Fxy	Fmax	Fmin	ANGLE
RC ENV~2	Max	Cent	-0.4	1.0	-0.3	1.2	-0.4	-74.30
		480	-0.3	1.0	-0.3	1.2	-0.3	-72.41
		481	-0.3	1.0	-0.3	1.2	-0.3	-72.33
		488	-0.5	1.0	-0.3	1.2	-0.5	-75.85
		487	-0.5	1.0	-0.3	1.2	-0.5	-75.90
	Min	Cent	-1.2	0.6	-0.7	0.7	-1.4	-74.25
		480	-0.9	0.6	-0.7	0.7	-1.1	-72.69
		481	-0.9	0.6	-0.7	0.7	-1.1	-72.33
		488	-1.5	0.6	-0.7	0.6	-1.7	-75.58
		487	-1.5	0.6	-0.7	0.7	-1.7	-75.83

	NODE	Mxx	Myy	Mxy	Mmax	Mmin	ANGLE
Max	Cent	-3.7	0.5	-0.2	0.6	-4.0	-81.24
	480	-4.3	0.3	-0.1	0.3	-4.4	-82.82
	481	-2.8	0.3	-0.3	0.5	-3.2	-78.74
	488	-3.0	0.7	-0.3	0.9	-3.4	-80.28
	487	-4.6	0.5	-0.2	0.6	-4.8	-83.77
Min	Cent	-5.4	-1.3	-1.0	-1.2	-5.4	-84.13
	480	-5.7	-1.4	-0.9	-1.3	-5.7	-85.82
	481	-4.8	-1.4	-1.1	-1.3	-4.8	-82.24
	488	-5.0	-1.1	-1.1	-1.1	-5.0	-80.60
	487	-6.1	-1.3	-1.0	-1.2	-6.1	-83.71

	NODE	Vxx	Vyy
Max	Cent	-1.6	-0.1
	480	-1.5	-0.0
	481	-1.5	-0.2
	488	-1.6	-0.2
	487	-1.6	-0.0
Min	Cent	-2.8	-1.3
	480	-2.6	-1.0
	481	-2.6	-1.5
	488	-3.0	-1.5
	487	-3.0	-1.0

ELEM	MAT	SEC	LC		NODE	Fxx	Fyy	Fxy	Fmax	Fmin	ANGLE
442	1	1	SX (RS)		Cent	1.1	0.3	0.7	1.5	-0.1	30.52
					481	0.7	0.2	0.7	1.2	-0.3	34.69
					482	0.7	0.5	0.7	1.3	-0.1	39.70
					489	1.4	0.5	0.7	1.8	0.1	27.35
					488	1.4	0.2	0.7	1.7	-0.1	24.05

	NODE	Mxx	Myy	Mxy	Mmax	Mmin	ANGLE
	Cent	3.7	0.6	0.8	3.9	0.4	14.34
	481	3.3	0.5	0.8	3.5	0.3	14.91
	482	3.8	0.4	0.9	4.0	0.2	13.65
	489	4.3	1.0	0.9	4.5	0.7	13.52
	488	3.4	0.8	0.8	3.6	0.6	16.16

	NODE	Vxx	Vyy
	Cent	1.3	1.0
	481	1.0	0.8
	482	1.0	1.2
	489	1.6	1.2
	488	1.6	0.8

LC		NODE	Fxx	Fyy	Fxy	Fmax	Fmin	ANGLE
SY (RS)		Cent	0.5	0.3	1.7	2.1	-1.3	43.06
		481	0.3	0.1	1.7	1.9	-1.5	43.14
		482	0.3	0.5	1.7	2.1	-1.3	46.61
		489	0.7	0.5	1.7	2.3	-1.1	43.11
		488	0.7	0.1	1.7	2.1	-1.3	39.69

	NODE	Mxx	Myy	Mxy	Mmax	Mmin	ANGLE

Cent	0.6	1.3	0.4	1.5	0.3	64.96
481	0.6	1.5	0.4	1.7	0.4	68.24
482	0.4	1.5	0.4	1.6	0.3	70.77
489	0.5	0.9	0.4	1.2	0.2	57.74
488	0.7	1.2	0.5	1.5	0.5	58.81

NODE	Vxx	Vyy
Cent	0.5	0.9
481	0.3	0.6
482	0.3	1.2
489	0.6	1.2
488	0.6	0.6

LC		NODE	Fxx	Fyy	Fxy	Fmax	Fmin	ANGLE
RC ENV~1	Max	Cent	0.5	1.3	1.2	2.0	0.4	-54.07
		481	0.3	1.4	1.2	2.3	0.3	-53.01
		482	0.3	1.2	1.2	2.0	0.3	-50.09
		489	0.7	1.2	1.2	1.8	0.6	57.95
		488	0.7	1.4	1.2	2.0	0.6	-57.63
	Min	Cent	-1.8	0.3	-2.2	0.8	-2.6	-71.16
		481	-1.2	0.5	-2.2	0.9	-2.3	-69.51
		482	-1.2	0.1	-2.2	0.8	-2.5	-68.87
		489	-2.4	0.1	-2.2	0.7	-3.0	-67.32
		488	-2.4	0.5	-2.2	0.8	-2.9	-73.06

	NODE	Mxx	Myy	Mxy	Mmax	Mmin	ANGLE
Max	Cent	1.6	1.8	-0.0	1.9	1.2	-83.16
	481	0.2	1.9	0.1	1.9	0.2	-86.53
	482	2.8	1.7	0.1	2.8	0.6	2.33
	489	3.6	2.0	-0.1	3.6	2.0	-3.06
	488	-0.0	1.9	-0.1	2.0	-0.0	-84.82
Min	Cent	-5.8	-2.1	-1.7	-1.8	-6.2	-72.87
	481	-6.5	-2.2	-1.5	-2.1	-6.8	-81.02
	482	-4.7	-2.6	-1.7	-2.1	-5.3	-52.05
	489	-5.1	-1.7	-1.9	-1.0	-5.6	-58.04
	488	-6.8	-2.0	-1.8	-1.8	-7.2	-77.57

	NODE	Vxx	Vyy
Max	Cent	-3.0	-0.1
	481	-3.0	0.1
	482	-3.0	-0.2
	489	-3.0	-0.2
	488	-3.0	0.1
Min	Cent	-7.5	-2.9
	481	-6.5	-2.0
	482	-6.5	-3.8
	489	-8.4	-3.8
	488	-8.4	-2.0

LC		NODE	Fxx	Fyy	Fxy	Fmax	Fmin	ANGLE
RC ENV~2	Max	Cent	-0.3	1.0	-0.3	1.2	-0.4	-69.09
		481	-0.2	1.0	-0.3	1.4	-0.3	-66.83
		482	-0.2	0.9	-0.3	1.2	-0.3	-64.96
		489	-0.4	0.9	-0.3	1.1	-0.5	-72.62
		488	-0.4	1.0	-0.3	1.3	-0.5	-72.22
	Min	Cent	-1.2	0.5	-1.0	0.7	-1.6	-71.04
		481	-0.8	0.5	-1.0	0.7	-1.2	-69.30
		482	-0.8	0.4	-1.0	0.7	-1.3	-68.66
		489	-1.7	0.4	-1.0	0.6	-2.0	-69.87
		488	-1.7	0.5	-1.0	0.7	-2.0	-73.00

	NODE	Mxx	Myy	Mxy	Mmax	Mmin	ANGLE
Max	Cent	-1.3	0.6	-0.5	0.9	-2.1	-71.57
	481	-2.5	0.4	-0.3	0.6	-3.0	-77.34
	482	-0.1	0.2	-0.4	0.8	-1.2	-37.16
	489	0.3	1.1	-0.6	1.7	-1.0	-44.88
	488	-2.8	0.8	-0.5	1.0	-3.4	-77.56
Min	Cent	-3.5	-1.2	-1.3	-1.0	-3.6	-73.53
	481	-4.6	-1.3	-1.1	-1.2	-4.6	-80.90
	482	-2.4	-1.7	-1.2	-1.2	-2.5	-55.96
	489	-2.2	-0.9	-1.4	-0.4	-2.4	-60.73

488	-4.9	-1.1	-1.3	-1.0	-4.9	-78.01

	NODE	Vxx	Vyy
Max	Cent	-4.0	-0.5
	481	-3.7	-0.2
	482	-3.7	-0.8
	489	-4.2	-0.8
	488	-4.2	-0.2
Min	Cent	-5.5	-2.1
	481	-4.9	-1.5
	482	-4.9	-2.8
	489	-6.2	-2.8
	488	-6.2	-1.5

ELEM	MAT	SEC	LC		NODE	Fxx	Fyy	Fxy	Fmax	Fmin	ANGLE
443	1	1	SX (RS)		Cent	0.8	0.5	0.6	1.3	-0.0	38.32
					482	0.7	0.4	0.6	1.2	-0.1	39.42
					483	0.7	0.6	0.6	1.3	-0.0	42.89
					490	0.9	0.6	0.6	1.4	0.1	37.52
					489	0.9	0.4	0.6	1.3	-0.0	34.33

	NODE	Mxx	Myy	Mxy	Mmax	Mmin	ANGLE
	Cent	4.0	0.6	1.0	4.3	0.3	15.05
	482	3.8	0.4	1.0	4.0	0.1	14.94
	483	3.6	0.6	1.1	4.0	0.2	18.00
	490	4.3	0.7	1.0	4.6	0.4	14.90
	489	4.5	1.0	0.9	4.7	0.8	13.51

	NODE	Vxx	Vyy
	Cent	0.4	0.8
	482	0.4	1.2
	483	0.4	0.3
	490	0.4	0.3
	489	0.4	1.2

LC		NODE	Fxx	Fyy	Fxy	Fmax	Fmin	ANGLE
SY (RS)		Cent	0.2	0.8	1.8	2.3	-1.3	49.29
		482	0.2	0.4	1.8	2.1	-1.5	46.78
		483	0.2	1.1	1.8	2.5	-1.2	52.26
		490	0.3	1.1	1.8	2.6	-1.1	51.42
		489	0.3	0.4	1.8	2.2	-1.4	45.90

	NODE	Mxx	Myy	Mxy	Mmax	Mmin	ANGLE
	Cent	0.4	1.2	0.3	1.3	0.3	68.96
	482	0.4	1.5	0.4	1.6	0.3	72.90
	483	0.2	1.6	0.3	1.6	0.2	76.87
	490	0.4	0.8	0.3	1.0	0.2	59.59
	489	0.7	0.9	0.4	1.2	0.4	52.79

	NODE	Vxx	Vyy
	Cent	0.8	1.6
	482	0.5	1.2
	483	0.5	2.0
	490	1.1	2.0
	489	1.1	1.2

LC		NODE	Fxx	Fyy	Fxy	Fmax	Fmin	ANGLE
RC ENV~1	Max	Cent	0.3	1.4	1.3	2.1	0.3	61.40
		482	0.3	1.2	1.3	2.1	0.2	-49.98
		483	0.3	1.8	1.3	2.5	0.2	63.96
		490	0.4	1.8	1.3	2.5	0.3	64.18
		489	0.4	1.2	1.3	2.0	0.3	-51.52
	Min	Cent	-1.4	-0.1	-2.3	0.8	-2.7	-71.30
		482	-1.2	0.2	-2.3	0.8	-2.5	-70.33
		483	-1.2	-0.4	-2.3	0.8	-2.8	-70.02
		490	-1.6	-0.4	-2.3	0.7	-2.9	-62.49
		489	-1.6	0.2	-2.3	0.8	-2.7	-72.44

	NODE	Mxx	Myy	Mxy	Mmax	Mmin	ANGLE
Max	Cent	5.1	1.8	0.2	5.1	1.2	3.33
	482	3.1	1.7	0.3	3.1	0.6	5.92
	483	5.9	1.7	0.6	5.9	1.6	6.14
	490	7.4	2.0	0.2	7.4	1.9	2.29
	489	4.1	2.1	-0.1	4.1	2.1	-1.97
Min	Cent	-3.0	-2.1	-1.8	-0.2	-3.8	-27.10
	482	-4.4	-2.5	-1.7	-1.9	-5.0	-41.32
	483	-1.4	-3.1	-1.7	0.8	-3.2	-52.81
	490	-1.2	-1.5	-1.8	1.6	-2.4	-57.18
	489	-4.9	-1.6	-1.9	-0.8	-5.5	-52.43

	NODE	Vxx	Vyy
Max	Cent	-4.9	-0.0
	482	-4.7	-0.2
	483	-4.7	0.3
	490	-5.1	0.3
	489	-5.1	-0.2
Min	Cent	-9.0	-3.9
	482	-7.9	-3.8
	483	-7.9	-4.0
	490	-10.1	-4.0
	489	-10.1	-3.8

LC		NODE	Fxx	Fyy	Fxy	Fmax	Fmin	ANGLE
RC ENV~2	Max	Cent	-0.3	0.9	-0.3	1.3	-0.4	-67.43
		482	-0.2	0.9	-0.3	1.2	-0.3	-65.76
		483	-0.2	0.9	-0.3	1.3	-0.3	-66.82
		490	-0.4	0.9	-0.3	1.3	-0.4	-68.93
		489	-0.4	0.9	-0.3	1.2	-0.4	-68.02
	Min	Cent	-1.0	0.5	-0.9	0.7	-1.4	-71.06
		482	-0.8	0.4	-0.9	0.7	-1.3	-70.02
		483	-0.8	0.5	-0.9	0.7	-1.2	-69.94
		490	-1.1	0.5	-0.9	0.6	-1.5	-72.00
		489	-1.1	0.4	-0.9	0.7	-1.5	-72.07

	NODE	Mxx	Myy	Mxy	Mmax	Mmin	ANGLE
Max	Cent	2.4	0.7	-0.4	2.7	0.1	-18.11
	482	0.3	0.3	-0.3	1.0	-0.9	-32.47
	483	3.5	0.1	-0.1	3.5	0.0	-7.64
	490	4.9	1.2	-0.5	5.1	0.9	-12.04
	489	0.9	1.2	-0.7	2.1	-0.6	-39.85
Min	Cent	-0.3	-1.2	-1.1	0.1	-1.4	-31.39
	482	-2.0	-1.6	-1.0	-1.1	-2.1	-47.93
	483	1.0	-2.0	-0.8	1.1	-2.0	-8.83
	490	1.7	-0.7	-1.1	1.9	-0.8	-16.34
	489	-1.9	-0.8	-1.3	-0.2	-2.1	-55.69

	NODE	Vxx	Vyy
Max	Cent	-5.7	-1.0
	482	-5.2	-0.8
	483	-5.2	-1.2
	490	-6.1	-1.2
	489	-6.1	-0.8
Min	Cent	-6.7	-2.8
	482	-6.0	-2.8
	483	-6.0	-2.9
	490	-7.5	-2.9
	489	-7.5	-2.8

ELEM	MAT	SEC	LC		NODE	Fxx	Fyy	Fxy	Fmax	Fmin	ANGLE
444	1	1	SX (RS)		Cent	0.8	0.7	0.6	1.3	0.1	43.26
					483	0.4	0.6	0.6	1.1	-0.1	49.16
					202	0.4	0.9	0.6	1.3	-0.0	56.63
					205	1.2	0.9	0.6	1.6	0.4	38.43
					490	1.2	0.6	0.6	1.5	0.2	31.33

	NODE	Mxx	Myy	Mxy	Mmax	Mmin	ANGLE
	Cent	3.5	0.9	1.4	4.1	0.3	23.81
	483	3.3	0.5	1.2	3.8	0.1	20.50

```
                          202        2.4        1.1        1.6        3.4        0.1      33.23
                          205        4.1        1.4        1.7        4.9        0.6      25.72
                          490        4.0        0.7        1.3        4.5        0.2      18.60

                         NODE        Vxx        Vyy
                     ---- ------ ---------- ----------
                         Cent        1.1        0.2
                          483        2.0        0.3
                          202        2.0        0.3
                          205        0.2        0.3
                          490        0.2        0.3


          LC         NODE        Fxx        Fyy        Fxy       Fmax       Fmin      ANGLE
--------- ---- ------ ---------- ---------- ---------- ---------- ---------- ----------
          SY (RS)    Cent        0.4        1.3        1.3        2.2       -0.5      54.69
                      483        0.1        1.1        1.3        2.0       -0.8      55.52
                      202        0.1        1.5        1.3        2.2       -0.7      59.12
                      205        0.7        1.5        1.3        2.4       -0.3      53.70
                      490        0.7        1.1        1.3        2.2       -0.4      49.56

                         NODE        Mxx        Myy        Mxy       Mmax       Mmin      ANGLE
                     ---- ------ ---------- ---------- ---------- ---------- ---------- ----------
                         Cent        0.4        1.1        0.2        1.1        0.4      77.09
                          483        0.2        1.6        0.2        1.6        0.2      80.29
                          202        0.2        1.6        0.1        1.6        0.1      84.88
                          205        0.9        0.7        0.1        1.0        0.7      25.41
                          490        0.6        0.8        0.2        1.0        0.4      56.35

                         NODE        Vxx        Vyy
                     ---- ------ ---------- ----------
                         Cent        0.5        2.0
                          483        0.5        2.0
                          202        0.5        2.1
                          205        0.6        2.1
                          490        0.6        2.0


          LC         NODE        Fxx        Fyy        Fxy       Fmax       Fmin      ANGLE
--------- ---- ------ ---------- ---------- ---------- ---------- ---------- ----------
RC ENV~1  Max        Cent        0.3        2.0        0.8        2.3        0.3      70.72
                      483        0.1        1.8        0.8        2.1        0.1      69.78
                      202        0.1        2.2        0.8        2.5        0.1      72.72
                      205        0.5        2.2        0.8        2.5        0.5      71.50
                      490        0.5        1.8        0.8        2.1        0.5      68.17
                 Min  Cent       -1.4       -0.5       -1.7        0.6       -2.4     -61.05
                      483       -0.8       -0.4       -1.7        0.8       -2.1     -72.06
                      202       -0.8       -0.7       -1.7        0.6       -2.3     -74.99
                      205       -2.0       -0.7       -1.7        0.4       -2.7     -64.92
                      490       -2.0       -0.4       -1.7        0.6       -2.6     -66.89

                         NODE        Mxx        Myy        Mxy       Mmax       Mmin      ANGLE
                     ---- ------ ---------- ---------- ---------- ---------- ---------- ----------
                 Max  Cent        8.5        2.1        1.2        8.5        2.1       0.38
                      483        5.8        1.7        0.9        6.0        1.7       9.15
                      202        8.9        2.3        1.6        9.0        2.2       3.44
                      205       13.0        3.3        1.7       13.1        3.0       5.36
                      490        7.3        2.0        0.9        7.5        2.0       8.72
                 Min  Cent        1.2       -1.9       -1.6        2.4       -1.9     -35.26
                      483       -0.9       -3.0       -1.6        1.0       -3.0     -49.51
                      202        3.3       -2.5       -1.5        3.8       -2.5     -19.43
                      205        3.3       -0.6       -1.7        4.1       -0.6     -25.47
                      490       -0.7       -1.4       -1.7        1.7       -1.9     -55.29

                         NODE        Vxx        Vyy
                     ---- ------ ---------- ----------
                 Max  Cent       -5.2        0.3
                      483       -3.6        0.3
                      202       -3.6        0.2
                      205       -6.3        0.2
                      490       -6.3        0.3
                 Min  Cent       -9.2       -4.1
                      483       -8.3       -4.0
                      202       -8.3       -4.1
                      205      -10.6       -4.1
                      490      -10.6       -4.0


          LC         NODE        Fxx        Fyy        Fxy       Fmax       Fmin      ANGLE
```

RC ENV~2	Max	Cent	-0.3	1.1	-0.2	1.4	-0.3	-69.95
		483	-0.2	0.9	-0.2	1.3	-0.3	-65.55
		202	-0.2	1.2	-0.2	1.5	-0.3	-67.65
		205	-0.3	1.2	-0.2	1.4	-0.4	-73.18
		490	-0.3	0.9	-0.2	1.2	-0.3	-71.88
	Min	Cent	-1.0	0.5	-0.9	0.6	-1.3	-76.01
		483	-0.6	0.5	-0.9	0.6	-1.0	-71.70
		202	-0.6	0.5	-0.9	0.5	-0.9	-74.10
		205	-1.4	0.5	-0.9	0.5	-1.7	-75.38
		490	-1.4	0.5	-0.9	0.6	-1.7	-74.67

	NODE	Mxx	Myy	Mxy	Mmax	Mmin	ANGLE
Max	Cent	6.3	1.0	0.4	6.3	1.0	0.07
	483	3.7	0.2	0.1	3.7	0.1	-4.30
	202	6.7	0.7	0.8	6.7	0.7	3.18
	205	9.6	2.0	0.7	9.7	2.0	4.96
	490	5.1	1.3	0.0	5.1	1.2	-4.06
Min	Cent	3.6	-1.0	-0.2	3.6	-1.0	-0.82
	483	1.4	-1.9	-0.5	1.4	-1.9	-3.63
	202	4.9	-1.5	0.1	4.9	-1.5	2.00
	205	6.0	-0.0	0.0	6.0	-0.1	0.47
	490	2.0	-0.7	-0.5	2.0	-0.7	-7.83

	NODE	Vxx	Vyy
Max	Cent	-6.2	-1.3
	483	-5.2	-1.2
	202	-5.2	-1.4
	205	-6.9	-1.4
	490	-6.9	-1.2
Min	Cent	-7.0	-3.0
	483	-6.3	-2.9
	202	-6.3	-3.0
	205	-8.0	-3.0
	490	-8.0	-2.9

ELEM	MAT	SEC	LC		NODE	Fxx	Fyy	Fxy	Fmax	Fmin	ANGLE
445	1	1	SX	(RS)	Cent	0.3	0.3	0.4	0.7	-0.1	44.86
					440	0.5	0.1	0.4	0.7	-0.2	32.13
					484	0.5	0.7	0.4	1.0	0.1	52.45
					491	1.0	0.7	0.4	1.3	0.4	33.82
					448	1.0	0.1	0.4	1.2	-0.1	20.38

	NODE	Mxx	Myy	Mxy	Mmax	Mmin	ANGLE
	Cent	0.3	0.2	1.4	1.6	-1.1	43.71
	440	2.0	0.4	0.5	2.1	0.3	15.98
	484	1.6	1.3	1.8	3.3	-0.4	42.88
	491	6.2	3.2	1.7	7.0	2.4	24.66
	448	9.1	1.8	0.4	9.1	1.8	3.26

	NODE	Vxx	Vyy
	Cent	12.7	3.4
	440	0.9	0.0
	484	0.9	6.9
	491	25.6	6.9
	448	25.6	0.0

LC		NODE	Fxx	Fyy	Fxy	Fmax	Fmin	ANGLE
SY	(RS)	Cent	0.5	2.9	1.3	3.5	-0.1	66.12
		440	0.2	4.1	1.3	4.5	-0.2	72.81
		484	0.2	1.7	1.3	2.5	-0.6	59.77
		491	1.0	1.7	1.3	2.7	-0.0	52.66
		448	1.0	4.1	1.3	4.6	0.5	69.72

	NODE	Mxx	Myy	Mxy	Mmax	Mmin	ANGLE
	Cent	1.8	2.1	0.5	2.5	1.4	52.88
	440	1.8	0.8	0.5	2.0	0.6	23.45
	484	1.5	1.1	0.3	1.7	0.9	28.80
	491	1.4	2.3	0.2	2.3	1.3	75.50
	448	5.2	5.4	0.4	5.7	4.9	49.66

	NODE	Vxx	Vyy
	Cent	5.8	6.8
	440	0.9	9.8
	484	0.9	3.7
	491	10.7	3.7
	448	10.7	9.8

LC		NODE	Fxx	Fyy	Fxy	Fmax	Fmin	ANGLE
RC ENV~1	Max	Cent	-0.2	3.8	1.3	4.2	-0.5	73.95
		440	-0.2	5.1	1.3	5.4	-0.3	77.56
		484	-0.2	2.6	1.3	3.1	-0.3	70.02
		491	0.2	2.6	1.3	3.2	0.1	66.73
		448	0.2	5.1	1.3	5.4	0.1	76.18
	Min	Cent	-2.1	-2.0	-1.4	-0.2	-3.0	-37.35
		440	-2.0	-3.1	-1.4	-0.2	-3.8	-25.35
		484	-2.0	-0.8	-1.4	0.4	-2.2	-72.39
		491	-2.2	-0.8	-1.4	0.1	-2.8	-54.62
		448	-2.2	-3.1	-1.4	-0.9	-4.0	-32.11

	NODE	Mxx	Myy	Mxy	Mmax	Mmin	ANGLE
Max	Cent	6.0	3.4	2.0	6.4	2.0	16.51
	440	4.3	-0.3	0.5	4.3	-0.4	0.28
	484	2.3	1.2	2.5	3.6	-0.1	46.12
	491	7.2	7.4	2.9	9.8	4.6	42.76
	448	12.7	8.5	0.9	12.7	7.8	5.38
Min	Cent	-0.8	-0.8	-0.8	-0.7	-0.8	44.98
	440	-1.7	-4.2	-0.9	-1.2	-4.3	-32.48
	484	-2.2	-2.8	-1.1	-1.1	-3.0	69.29
	491	-5.3	0.2	-0.6	0.3	-5.4	-83.78
	448	-5.6	-2.3	-0.4	-1.7	-5.6	-0.57

	NODE	Vxx	Vyy
Max	Cent	16.0	0.2
	440	4.4	3.0
	484	4.4	0.6
	491	30.4	0.6
	448	30.4	3.0
Min	Cent	-9.4	-15.8
	440	0.9	-16.6
	484	0.9	-15.7
	491	-20.8	-15.7
	448	-20.8	-16.6

LC		NODE	Fxx	Fyy	Fxy	Fmax	Fmin	ANGLE
RC ENV~2	Max	Cent	-0.6	1.5	0.0	1.5	-0.6	-89.49
		440	-0.4	1.6	0.0	1.6	-0.4	-89.50
		484	-0.4	1.5	0.0	1.5	-0.4	-86.67
		491	-0.8	1.5	0.0	1.5	-0.8	-87.11
		448	-0.8	1.6	0.0	1.6	-0.8	-89.52
	Min	Cent	-1.5	0.9	-0.2	0.9	-1.5	-84.99
		440	-1.4	0.9	-0.2	0.9	-1.4	-82.44
		484	-1.4	0.8	-0.2	0.8	-1.4	88.69
		491	-1.6	0.8	-0.2	0.8	-1.6	88.65
		448	-1.6	0.9	-0.2	0.9	-1.6	-84.11

	NODE	Mxx	Myy	Mxy	Mmax	Mmin	ANGLE
Max	Cent	4.1	1.6	1.0	4.4	1.3	18.67
	440	2.9	-1.1	0.1	2.9	-1.1	0.54
	484	1.4	-0.1	1.3	1.9	-1.0	21.81
	491	4.7	5.5	1.9	6.9	3.2	51.07
	448	8.9	4.6	0.7	8.9	4.5	6.44
Min	Cent	0.9	-0.1	0.2	1.1	-0.1	28.51
	440	-0.2	-2.9	-0.6	-0.1	-2.9	-12.31
	484	-0.9	-1.8	0.3	-0.6	-1.9	26.10
	491	-0.1	1.8	0.8	2.2	-0.5	64.82
	448	2.7	1.9	-0.2	2.9	1.9	28.54

	NODE	Vxx	Vyy
Max	Cent	6.5	-5.9

		440	3.1	-6.8
		484	3.1	-5.1
		491	10.4	-5.1
		448	10.4	-6.8
	Min	Cent	1.7	-11.4
		440	1.8	-11.5
		484	1.8	-11.3
		491	1.2	-11.3
		448	1.2	-11.5

ELEM	MAT	SEC	LC		NODE	Fxx	Fyy	Fxy	Fmax	Fmin	ANGLE
446	1	1	SX	(RS)	Cent	1.3	0.5	0.7	1.7	0.1	29.21
					484	0.4	1.0	0.7	1.4	-0.0	56.05
					485	0.4	0.2	0.7	1.0	-0.4	39.42
					492	2.3	0.2	0.7	2.5	-0.0	16.20
					491	2.3	1.0	0.7	2.6	0.7	22.90

	NODE	Mxx	Myy	Mxy	Mmax	Mmin	ANGLE
	Cent	3.1	0.8	0.4	3.1	0.8	9.38
	484	1.8	1.3	0.5	2.1	1.0	30.71
	485	2.4	0.4	0.5	2.5	0.3	13.69
	492	2.8	1.3	0.5	2.9	1.1	16.45
	491	5.5	3.1	0.5	5.6	3.0	10.80

	NODE	Vxx	Vyy
	Cent	2.3	4.5
	484	1.1	6.9
	485	1.1	2.1
	492	4.7	2.1
	491	4.7	6.9

LC		NODE	Fxx	Fyy	Fxy	Fmax	Fmin	ANGLE
SY	(RS)	Cent	1.0	0.9	2.1	3.0	-1.2	44.21
		484	0.3	2.0	2.1	3.4	-1.1	55.89
		485	0.3	0.6	2.1	2.6	-1.6	46.80
		492	1.7	0.6	2.1	3.3	-1.0	37.91
		491	1.7	2.0	2.1	3.9	-0.3	47.39

	NODE	Mxx	Myy	Mxy	Mmax	Mmin	ANGLE
	Cent	0.5	1.0	0.2	1.1	0.5	70.84
	484	1.0	1.0	0.1	1.2	0.9	49.53
	485	0.5	0.7	0.2	0.8	0.4	58.88
	492	1.3	0.7	0.5	1.6	0.4	30.94
	491	2.3	3.0	0.5	3.3	2.0	61.91

	NODE	Vxx	Vyy
	Cent	3.5	1.6
	484	1.9	3.7
	485	1.9	0.6
	492	5.1	0.6
	491	5.1	3.7

LC		NODE	Fxx	Fyy	Fxy	Fmax	Fmin	ANGLE
RC ENV~1	Max	Cent	0.6	1.9	2.0	3.1	0.3	54.86
		484	-0.2	2.9	2.0	3.9	-0.3	64.47
		485	-0.2	1.8	2.0	2.7	-0.4	56.61
		492	1.6	1.8	2.0	3.2	0.6	48.49
		491	1.6	2.9	2.0	4.1	1.1	58.31
	Min	Cent	-2.1	0.0	-2.2	0.6	-3.2	-73.23
		484	-1.8	-1.1	-2.2	0.4	-3.2	-60.99
		485	-1.8	0.2	-2.2	0.9	-2.7	-84.55
		492	-3.0	0.2	-2.2	0.8	-3.6	-78.43
		491	-3.0	-1.1	-2.2	0.1	-4.0	-76.00

	NODE	Mxx	Myy	Mxy	Mmax	Mmin	ANGLE
Max	Cent	1.1	2.5	2.8	3.9	0.2	57.65
	484	1.4	1.0	2.7	2.9	-0.6	29.05
	485	-0.4	1.5	2.3	1.9	-1.1	61.17

		492	-1.3	3.1	2.6	3.9	-1.7	74.25
		491	5.4	7.0	2.9	8.9	4.2	55.76
	Min	Cent	-5.1	-0.6	0.6	-0.4	-5.1	76.25
		484	-2.8	-2.9	0.5	-1.3	-3.7	71.18
		485	-5.2	-1.3	0.2	-1.3	-5.2	84.14
		492	-6.9	-0.3	0.4	-0.3	-6.9	85.36
		491	-5.5	0.2	0.6	0.3	-5.6	83.24

		NODE	Vxx	Vyy
	Max	Cent	12.3	0.1
		484	8.3	0.6
		485	8.3	-0.4
		492	16.3	-0.4
		491	16.3	0.6
	Min	Cent	1.7	-10.9
		484	1.7	-15.7
		485	1.7	-6.1
		492	1.6	-6.1
		491	1.6	-15.7

LC		NODE	Fxx	Fyy	Fxy	Fmax	Fmin	ANGLE
RC ENV~2	Max	Cent	-0.4	1.4	0.1	1.4	-0.5	-83.88
		484	-0.6	1.5	0.1	1.5	-0.6	-84.14
		485	-0.6	1.3	0.1	1.3	-0.6	-88.41
		492	-0.3	1.3	0.1	1.3	-0.4	-88.61
		491	-0.3	1.5	0.1	1.5	-0.4	-84.13
	Min	Cent	-1.5	0.8	-0.3	0.8	-1.5	-89.11
		484	-1.3	0.8	-0.3	0.8	-1.3	88.03
		485	-1.3	0.7	-0.3	0.7	-1.3	-84.77
		492	-1.7	0.7	-0.3	0.7	-1.7	-85.11
		491	-1.7	0.8	-0.3	0.8	-1.7	88.46

		NODE	Mxx	Myy	Mxy	Mmax	Mmin	ANGLE
	Max	Cent	-0.6	1.7	2.0	2.9	-1.7	59.85
		484	0.8	-0.2	1.9	2.0	-1.7	31.18
		485	-2.2	0.9	1.7	1.3	-2.9	64.40
		492	-3.9	2.4	1.8	2.9	-4.2	75.09
		491	3.1	5.2	2.1	6.5	1.8	57.98
	Min	Cent	-2.6	-0.1	0.6	0.0	-2.7	76.03
		484	-1.4	-1.9	0.6	-0.8	-2.6	37.84
		485	-3.3	-0.7	0.3	-0.6	-3.3	82.99
		492	-4.6	0.1	0.5	0.2	-4.7	84.61
		491	-1.0	1.6	0.8	1.9	-1.2	71.99

		NODE	Vxx	Vyy
	Max	Cent	8.8	-3.5
		484	6.0	-5.1
		485	6.0	-1.9
		492	11.7	-1.9
		491	11.7	-5.1
	Min	Cent	4.8	-7.9
		484	3.5	-11.3
		485	3.5	-4.4
		492	6.0	-4.4
		491	6.0	-11.3

ELEM	MAT	SEC	LC		NODE	Fxx	Fyy	Fxy	Fmax	Fmin	ANGLE
447	1	1	SX (RS)		Cent	1.3	0.1	0.4	1.4	0.0	17.08
					485	1.0	0.1	0.4	1.1	-0.0	21.71
					486	1.0	0.2	0.4	1.2	0.0	22.68
					493	1.7	0.2	0.4	1.8	0.1	14.12
					492	1.7	0.1	0.4	1.8	0.0	13.69

		NODE	Mxx	Myy	Mxy	Mmax	Mmin	ANGLE
		Cent	2.0	0.8	0.6	2.3	0.5	22.69
		485	2.1	0.4	0.6	2.3	0.2	17.32
		486	1.9	0.6	0.6	2.2	0.4	21.22
		493	2.0	1.1	0.7	2.3	0.7	28.69
		492	2.6	1.3	0.7	2.9	1.0	21.96

		NODE	Vxx	Vyy

Cent	2.5	1.7	
485	2.1	2.1	
486	2.1	1.2	
493	3.0	1.2	
492	3.0	2.1	

LC		NODE	Fxx	Fyy	Fxy	Fmax	Fmin	ANGLE
SY (RS)		Cent	0.7	0.5	1.4	2.0	-0.8	42.66
		485	0.8	0.6	1.4	2.1	-0.7	43.34
		486	0.8	0.4	1.4	2.0	-0.8	40.72
		493	0.7	0.4	1.4	1.9	-0.9	42.14
		492	0.7	0.6	1.4	2.0	-0.8	44.77

	NODE	Mxx	Myy	Mxy	Mmax	Mmin	ANGLE
	Cent	0.5	0.8	0.6	1.2	0.1	51.65
	485	0.5	0.7	0.4	1.0	0.2	55.05
	486	0.7	1.1	0.5	1.5	0.4	56.24
	493	0.6	1.0	0.7	1.5	0.0	53.22
	492	0.6	0.7	0.6	1.3	0.0	45.19

	NODE	Vxx	Vyy
	Cent	0.3	0.3
	485	0.9	0.6
	486	0.9	0.2
	493	0.4	0.2
	492	0.4	0.6

LC		NODE	Fxx	Fyy	Fxy	Fmax	Fmin	ANGLE
RC ENV~1	Max	Cent	0.6	1.8	1.3	2.1	0.5	58.28
		485	0.4	1.8	1.3	2.2	0.3	58.16
		486	0.4	1.7	1.3	2.0	0.3	55.56
		493	0.9	1.7	1.3	1.9	0.7	58.55
		492	0.9	1.8	1.3	2.1	0.7	60.90
	Min	Cent	-2.0	0.3	-1.5	0.8	-2.3	-78.99
		485	-1.7	0.2	-1.5	0.8	-2.4	-77.21
		486	-1.7	0.4	-1.5	0.7	-2.3	-76.86
		493	-2.5	0.4	-1.5	0.7	-2.6	-80.29
		492	-2.5	0.2	-1.5	0.8	-2.6	-80.49

	NODE	Mxx	Myy	Mxy	Mmax	Mmin	ANGLE
Max	Cent	-2.1	1.9	1.4	2.1	-2.3	77.55
	485	-1.2	1.5	1.8	1.6	-1.6	79.61
	486	-2.6	1.8	1.2	1.9	-2.7	83.82
	493	-3.3	2.2	0.9	2.3	-3.4	82.38
	492	-1.0	3.4	1.5	3.7	-1.2	78.72
Min	Cent	-6.2	-1.2	-0.4	-1.2	-6.2	-86.46
	485	-5.4	-1.5	-0.2	-1.4	-5.4	86.17
	486	-7.2	-1.7	-0.5	-1.7	-7.2	88.60
	493	-8.6	-1.5	-0.6	-1.5	-8.7	-87.10
	492	-6.2	-0.1	-0.3	-0.1	-6.2	-87.53

	NODE	Vxx	Vyy
Max	Cent	6.7	-0.1
	485	6.0	-0.4
	486	6.0	0.2
	493	7.3	0.2
	492	7.3	-0.4
Min	Cent	-0.0	-4.4
	485	0.2	-6.1
	486	0.2	-2.6
	493	-0.2	-2.6
	492	-0.2	-6.1

LC		NODE	Fxx	Fyy	Fxy	Fmax	Fmin	ANGLE
RC ENV~2	Max	Cent	-0.6	1.3	-0.1	1.3	-0.7	-86.20
		485	-0.6	1.3	-0.1	1.3	-0.6	-85.99
		486	-0.6	1.3	-0.1	1.3	-0.6	-83.41
		493	-0.7	1.3	-0.1	1.3	-0.7	-84.01

	492	-0.7	1.3	-0.1	1.3	-0.7	-86.50
Min	Cent	-1.4	0.7	-0.3	0.7	-1.4	-83.95
	485	-1.2	0.7	-0.3	0.7	-1.3	-81.20
	486	-1.2	0.7	-0.3	0.7	-1.3	-85.71
	493	-1.6	0.7	-0.3	0.7	-1.6	-86.34
	492	-1.6	0.7	-0.3	0.7	-1.6	-81.89

	NODE	Mxx	Myy	Mxy	Mmax	Mmin	ANGLE
Max	Cent	-4.2	1.3	1.0	1.3	-4.2	85.09
	485	-2.8	0.8	1.2	0.9	-3.2	80.81
	486	-4.5	0.8	0.8	0.8	-4.5	87.89
	493	-5.2	1.2	0.6	1.2	-5.2	87.93
	492	-3.1	2.6	1.1	2.8	-3.3	79.61
Min	Cent	-4.6	-0.5	-0.2	-0.5	-4.6	-87.83
	485	-3.7	-0.8	0.0	-0.8	-3.7	85.53
	486	-5.3	-1.0	-0.3	-1.0	-5.4	88.43
	493	-6.4	-0.8	-0.4	-0.8	-6.4	-85.73
	492	-4.0	0.3	-0.1	0.3	-4.0	-88.88

	NODE	Vxx	Vyy
Max	Cent	4.8	-1.3
	485	4.3	-1.9
	486	4.3	-0.5
	493	5.2	-0.5
	492	5.2	-1.9
Min	Cent	2.0	-3.1
	485	1.9	-4.4
	486	1.9	-1.9
	493	2.2	-1.9
	492	2.2	-4.4

ELEM	MAT	SEC	LC		NODE	Fxx	Fyy	Fxy	Fmax	Fmin	ANGLE
448	1	1	SX	(RS)	Cent	1.3	0.2	0.5	1.5	0.0	19.46
					486	1.1	0.1	0.5	1.3	-0.0	21.65
					487	1.1	0.2	0.5	1.3	0.0	23.23
					494	1.5	0.2	0.5	1.7	0.1	17.63
					493	1.5	0.1	0.5	1.7	0.0	16.62

	NODE	Mxx	Myy	Mxy	Mmax	Mmin	ANGLE
	Cent	2.1	0.8	0.6	2.4	0.6	21.78
	486	1.9	0.6	0.6	2.1	0.3	22.73
	487	2.4	0.7	0.7	2.7	0.5	18.72
	494	2.5	1.0	0.6	2.7	0.8	19.06
	493	2.0	1.1	0.6	2.3	0.8	26.42

	NODE	Vxx	Vyy
	Cent	2.0	0.9
	486	1.9	1.2
	487	1.9	0.7
	494	2.1	0.7
	493	2.1	1.2

LC		NODE	Fxx	Fyy	Fxy	Fmax	Fmin	ANGLE
SY	(RS)	Cent	0.6	0.3	1.4	1.9	-0.9	42.09
		486	0.6	0.4	1.4	1.9	-0.9	42.64
		487	0.6	0.3	1.4	1.9	-1.0	41.90
		494	0.6	0.3	1.4	1.9	-0.9	41.52
		493	0.6	0.4	1.4	1.9	-0.9	42.26

	NODE	Mxx	Myy	Mxy	Mmax	Mmin	ANGLE
	Cent	0.5	1.1	0.6	1.4	0.2	59.57
	486	0.6	1.1	0.5	1.4	0.2	58.55
	487	0.6	1.3	0.5	1.6	0.4	62.29
	494	0.5	1.2	0.6	1.5	0.1	60.26
	493	0.4	1.0	0.6	1.3	-0.0	57.38

	NODE	Vxx	Vyy
	Cent	0.1	0.2
	486	0.1	0.2

		487	0.1	0.2				
		494	0.1	0.2				
		493	0.1	0.2				

LC		NODE	Fxx	Fyy	Fxy	Fmax	Fmin	ANGLE
RC ENV~1	Max	Cent	0.6	1.7	1.2	1.8	0.5	58.81
		486	0.5	1.7	1.2	1.9	0.4	58.28
		487	0.5	1.7	1.2	1.8	0.4	57.60
		494	0.7	1.7	1.2	1.8	0.6	59.31
		493	0.7	1.7	1.2	1.8	0.5	59.95
	Min	Cent	-2.1	0.4	-1.6	0.8	-2.3	-76.53
		486	-1.8	0.4	-1.6	0.8	-2.2	-75.24
		487	-1.8	0.5	-1.6	0.7	-2.2	-74.72
		494	-2.4	0.5	-1.6	0.7	-2.5	-77.62
		493	-2.4	0.4	-1.6	0.8	-2.5	-77.98

		NODE	Mxx	Myy	Mxy	Mmax	Mmin	ANGLE
	Max	Cent	-2.8	2.0	0.4	2.0	-2.8	87.29
		486	-2.8	1.8	0.6	1.8	-2.9	86.29
		487	-2.3	2.0	0.3	2.0	-2.3	88.61
		494	-2.6	2.1	0.2	2.1	-2.7	88.20
		493	-3.0	2.2	0.5	2.3	-3.1	85.54
	Min	Cent	-8.1	-1.8	-1.0	-1.7	-8.1	-86.36
		486	-7.3	-1.7	-0.9	-1.7	-7.3	-87.69
		487	-8.2	-1.9	-1.1	-1.9	-8.2	-85.62
		494	-9.1	-2.0	-1.1	-1.9	-9.1	-85.01
		493	-7.8	-1.5	-0.9	-1.4	-7.8	-84.46

		NODE	Vxx	Vyy
	Max	Cent	2.2	0.1
		486	2.1	0.2
		487	2.1	0.1
		494	2.3	0.1
		493	2.3	0.2
	Min	Cent	-1.9	-2.0
		486	-1.8	-2.6
		487	-1.8	-1.5
		494	-2.0	-1.5
		493	-2.0	-2.6

LC		NODE	Fxx	Fyy	Fxy	Fmax	Fmin	ANGLE
RC ENV~2	Max	Cent	-0.7	1.2	-0.1	1.3	-0.7	-81.72
		486	-0.6	1.2	-0.1	1.3	-0.6	-82.78
		487	-0.6	1.2	-0.1	1.3	-0.6	-81.16
		494	-0.8	1.2	-0.1	1.3	-0.8	-82.27
		493	-0.8	1.2	-0.1	1.3	-0.8	-83.72
	Min	Cent	-1.5	0.7	-0.4	0.7	-1.5	-82.79
		486	-1.3	0.7	-0.4	0.7	-1.4	-80.85
		487	-1.3	0.6	-0.4	0.7	-1.4	-82.05
		494	-1.7	0.6	-0.4	0.7	-1.7	-83.15
		493	-1.7	0.7	-0.4	0.7	-1.7	-80.76

		NODE	Mxx	Myy	Mxy	Mmax	Mmin	ANGLE
	Max	Cent	-4.8	1.0	0.2	1.0	-4.8	-87.70
		486	-4.6	0.8	0.4	0.8	-4.6	-88.81
		487	-4.6	0.8	0.1	0.8	-4.7	-86.43
		494	-5.0	1.1	-0.0	1.1	-5.1	-86.65
		493	-5.0	1.3	0.3	1.3	-5.0	-89.81
	Min	Cent	-6.0	-1.0	-0.7	-0.9	-6.0	-86.74
		486	-5.4	-1.0	-0.6	-1.0	-5.4	-88.01
		487	-6.1	-1.1	-0.8	-1.1	-6.1	-85.91
		494	-6.7	-1.1	-0.8	-1.1	-6.7	-85.46
		493	-5.9	-0.7	-0.6	-0.7	-5.9	-85.37

		NODE	Vxx	Vyy
	Max	Cent	1.2	-0.4
		486	1.2	-0.5
		487	1.2	-0.2
		494	1.3	-0.2
		493	1.3	-0.5
	Min	Cent	-0.4	-1.5

					486	-0.4	-1.9				
					487	-0.4	-1.1				
					494	-0.4	-1.1				
					493	-0.4	-1.9				

ELEM	MAT	SEC	LC		NODE	Fxx	Fyy	Fxy	Fmax	Fmin	ANGLE
449	1	1	SX	(RS)	Cent	1.5	0.2	0.5	1.7	0.1	19.95
					487	1.2	0.2	0.5	1.5	-0.0	22.06
					488	1.2	0.3	0.5	1.5	0.1	23.95
					495	1.7	0.3	0.5	1.9	0.1	18.23
					494	1.7	0.2	0.5	1.9	0.0	17.01

		NODE	Mxx	Myy	Mxy	Mmax	Mmin	ANGLE
		Cent	2.9	1.0	0.7	3.1	0.7	17.71
		487	2.5	0.7	0.7	2.7	0.5	19.29
		488	3.3	0.9	0.7	3.5	0.7	15.46
		495	3.4	1.4	0.7	3.6	1.2	16.33
		494	2.4	1.0	0.6	2.7	0.8	20.59

		NODE	Vxx	Vyy
		Cent	1.9	0.8
		487	1.8	0.7
		488	1.8	1.0
		495	2.0	1.0
		494	2.0	0.7

LC		NODE	Fxx	Fyy	Fxy	Fmax	Fmin	ANGLE
SY	(RS)	Cent	0.6	0.2	1.5	1.9	-1.1	41.11
		487	0.6	0.3	1.5	1.9	-1.0	42.31
		488	0.6	0.2	1.5	1.9	-1.1	40.86
		495	0.7	0.2	1.5	1.9	-1.1	40.06
		494	0.7	0.3	1.5	2.0	-1.0	41.50

	NODE	Mxx	Myy	Mxy	Mmax	Mmin	ANGLE
	Cent	0.5	1.2	0.5	1.5	0.2	60.68
	487	0.6	1.3	0.5	1.6	0.3	61.44
	488	0.6	1.2	0.5	1.5	0.3	61.06
	495	0.4	1.0	0.5	1.3	0.1	58.93
	494	0.5	1.2	0.5	1.5	0.2	60.88

	NODE	Vxx	Vyy
	Cent	0.2	0.3
	487	0.2	0.2
	488	0.2	0.3
	495	0.3	0.3
	494	0.3	0.2

LC		NODE	Fxx	Fyy	Fxy	Fmax	Fmin	ANGLE
RC ENV~1	Max	Cent	0.7	1.7	1.2	1.8	0.6	-78.97
		487	0.6	1.6	1.2	1.8	0.5	-77.83
		488	0.6	1.7	1.2	1.9	0.5	-78.04
		495	0.7	1.7	1.2	1.8	0.7	-79.93
		494	0.7	1.6	1.2	1.8	0.6	-79.77
	Min	Cent	-2.5	0.5	-1.8	0.8	-2.6	-74.82
		487	-2.1	0.5	-1.8	0.8	-2.4	-73.27
		488	-2.1	0.5	-1.8	0.7	-2.3	-72.71
		495	-2.8	0.5	-1.8	0.7	-3.0	-76.10
		494	-2.8	0.5	-1.8	0.8	-3.0	-76.48

		NODE	Mxx	Myy	Mxy	Mmax	Mmin	ANGLE
	Max	Cent	-1.4	2.1	0.0	2.1	-1.4	-88.95
		487	-2.3	2.0	0.1	2.0	-2.3	-89.63
		488	-0.1	2.1	0.0	2.1	-0.1	-87.51
		495	-0.3	2.7	-0.0	2.7	-0.3	-89.08
		494	-2.7	2.1	0.1	2.1	-2.7	89.94
	Min	Cent	-7.7	-1.8	-1.5	-1.7	-7.7	-81.87
		487	-8.2	-1.9	-1.4	-1.8	-8.2	-83.41
		488	-6.8	-1.8	-1.6	-1.6	-7.1	-79.71

495	-7.2	-1.7	-1.6	-1.5	-7.4	-80.25
494	-8.9	-2.0	-1.3	-1.9	-8.9	-83.55

	NODE	Vxx	Vyy
Max	Cent	-0.4	0.0
	487	-0.4	0.1
	488	-0.4	0.0
	495	-0.4	0.0
	494	-0.4	0.1
Min	Cent	-4.2	-2.0
	487	-4.0	-1.5
	488	-4.0	-2.5
	495	-4.4	-2.5
	494	-4.4	-1.5

LC		NODE	Fxx	Fyy	Fxy	Fmax	Fmin	ANGLE
RC ENV~2	Max	Cent	-0.6	1.2	-0.2	1.3	-0.6	-79.01
		487	-0.5	1.2	-0.2	1.3	-0.5	-77.88
		488	-0.5	1.2	-0.2	1.4	-0.5	-78.09
		495	-0.6	1.2	-0.2	1.4	-0.7	-79.96
		494	-0.6	1.2	-0.2	1.3	-0.7	-79.80
	Min	Cent	-1.7	0.6	-0.6	0.7	-1.9	-79.82
		487	-1.5	0.7	-0.6	0.7	-1.6	-79.17
		488	-1.5	0.6	-0.6	0.7	-1.6	-78.82
		495	-2.0	0.6	-0.6	0.7	-2.1	-80.40
		494	-2.0	0.7	-0.6	0.7	-2.1	-80.67

	NODE	Mxx	Myy	Mxy	Mmax	Mmin	ANGLE
Max	Cent	-3.9	1.1	-0.3	1.2	-4.2	-82.94
	487	-4.6	0.8	-0.2	0.8	-4.7	-84.07
	488	-2.9	1.0	-0.4	1.1	-3.3	-80.23
	495	-3.2	1.6	-0.4	1.7	-3.5	-81.94
	494	-5.0	1.1	-0.2	1.1	-5.1	-84.97
Min	Cent	-5.7	-1.0	-1.1	-0.9	-5.7	-82.31
	487	-6.0	-1.1	-1.0	-1.0	-6.1	-83.73
	488	-5.0	-1.0	-1.2	-0.9	-5.0	-80.16
	495	-5.3	-0.8	-1.1	-0.7	-5.3	-80.85
	494	-6.6	-1.1	-0.9	-1.0	-6.6	-83.98

	NODE	Vxx	Vyy
Max	Cent	-1.6	-0.3
	487	-1.6	-0.2
	488	-1.6	-0.4
	495	-1.7	-0.4
	494	-1.7	-0.2
Min	Cent	-3.1	-1.5
	487	-3.0	-1.1
	488	-3.0	-1.8
	495	-3.3	-1.8
	494	-3.3	-1.1

ELEM	MAT	SEC	LC		NODE	Fxx	Fyy	Fxy	Fmax	Fmin	ANGLE
450	1	1	SX (RS)		Cent	1.8	0.4	0.7	2.0	0.1	22.12
					488	1.3	0.3	0.7	1.7	-0.1	25.39
					489	1.3	0.5	0.7	1.7	0.1	29.08
					496	2.2	0.5	0.7	2.4	0.3	19.48
					495	2.2	0.3	0.7	2.4	0.0	17.47

	NODE	Mxx	Myy	Mxy	Mmax	Mmin	ANGLE
	Cent	3.9	1.1	0.8	4.1	0.9	15.14
	488	3.4	0.9	0.8	3.6	0.7	15.91
	489	4.3	0.8	0.8	4.5	0.6	12.85
	496	4.6	1.6	0.8	4.8	1.4	14.12
	495	3.3	1.3	0.8	3.5	1.1	18.99

	NODE	Vxx	Vyy
	Cent	2.0	1.3
	488	1.6	1.0
	489	1.6	1.6
	496	2.4	1.6

		495	2.4	1.0			

LC		NODE	Fxx	Fyy	Fxy	Fmax	Fmin	ANGLE
SY (RS)		Cent	0.7	0.0	1.6	2.0	-1.3	39.24
		488	0.6	0.1	1.6	2.0	-1.2	40.62
		489	0.6	0.2	1.6	2.0	-1.2	40.74
		496	0.8	0.2	1.6	2.1	-1.2	39.47
		495	0.8	0.1	1.6	2.1	-1.2	39.35

		NODE	Mxx	Myy	Mxy	Mmax	Mmin	ANGLE
		Cent	0.6	1.0	0.5	1.4	0.2	54.57
		488	0.7	1.2	0.5	1.5	0.4	58.39
		489	0.5	0.9	0.5	1.2	0.2	57.20
		496	0.7	0.8	0.6	1.3	0.2	46.87
		495	0.6	1.0	0.6	1.4	0.2	55.63

		NODE	Vxx	Vyy
		Cent	0.4	0.3
		488	0.6	0.3
		489	0.6	0.4
		496	0.5	0.4
		495	0.5	0.3

LC		NODE	Fxx	Fyy	Fxy	Fmax	Fmin	ANGLE
RC ENV~1	Max	Cent	0.8	1.7	1.2	2.0	0.7	-75.57
		488	0.6	1.6	1.2	2.0	0.5	-73.22
		489	0.6	1.8	1.2	2.2	0.6	-73.93
		496	1.0	1.8	1.2	2.1	0.9	-77.39
		495	1.0	1.6	1.2	1.9	0.8	-76.93
	Min	Cent	-2.9	0.4	-2.1	0.8	-3.3	-80.57
		488	-2.2	0.5	-2.1	0.8	-2.7	-76.78
		489	-2.2	0.3	-2.1	0.7	-2.7	-79.64
		496	-3.6	0.3	-2.1	0.6	-3.9	-74.24
		495	-3.6	0.5	-2.1	0.8	-3.9	-74.88

		NODE	Mxx	Myy	Mxy	Mmax	Mmin	ANGLE
	Max	Cent	1.7	2.5	-0.2	2.6	1.6	-76.05
		488	0.0	2.2	-0.1	2.2	0.0	-84.97
		489	3.5	2.1	-0.3	3.6	1.9	-9.22
		496	3.9	3.9	-0.3	4.3	3.6	-56.97
		495	-0.6	2.6	-0.2	2.6	-0.7	-87.29
	Min	Cent	-6.1	-1.3	-2.1	-1.0	-6.6	-71.88
		488	-6.8	-1.8	-1.9	-1.5	-7.2	-77.07
		489	-5.0	-1.4	-2.2	-0.7	-5.6	-57.65
		496	-5.4	-0.5	-2.2	0.1	-5.9	-65.78
		495	-7.4	-1.7	-1.9	-1.5	-7.6	-78.73

		NODE	Vxx	Vyy
	Max	Cent	-3.0	-0.3
		488	-3.0	0.0
		489	-3.0	-0.5
		496	-3.0	-0.5
		495	-3.0	0.0
	Min	Cent	-9.3	-3.9
		488	-8.4	-2.5
		489	-8.4	-5.4
		496	-10.2	-5.4
		495	-10.2	-2.5

LC		NODE	Fxx	Fyy	Fxy	Fmax	Fmin	ANGLE
RC ENV~2	Max	Cent	-0.5	1.3	-0.2	1.5	-0.5	-75.65
		488	-0.4	1.2	-0.2	1.5	-0.4	-73.33
		489	-0.4	1.3	-0.2	1.6	-0.4	-74.04
		496	-0.5	1.3	-0.2	1.5	-0.6	-77.44
		495	-0.5	1.2	-0.2	1.4	-0.6	-76.98
	Min	Cent	-2.1	0.6	-0.9	0.6	-2.3	-79.64
		488	-1.6	0.6	-0.9	0.7	-1.9	-76.42
		489	-1.6	0.6	-0.9	0.6	-1.9	-78.65
		496	-2.6	0.6	-0.9	0.6	-2.8	-79.81

495	-2.6	0.6	-0.9	0.7	-2.8	-78.54

	NODE	Mxx	Myy	Mxy	Mmax	Mmin	ANGLE
Max	Cent	-1.4	1.6	-0.7	1.9	-2.1	-74.06
	488	-2.8	1.0	-0.6	1.2	-3.3	-77.58
	489	0.4	1.3	-0.8	2.1	-1.1	-46.08
	496	0.5	2.6	-0.8	3.2	-0.5	-59.52
	495	-3.5	1.5	-0.6	1.7	-3.9	-79.93
Min	Cent	-3.6	-0.6	-1.5	-0.3	-3.8	-72.95
	488	-4.8	-0.9	-1.4	-0.8	-4.9	-77.60
	489	-2.2	-0.7	-1.6	-0.1	-2.4	-59.93
	496	-2.3	0.1	-1.6	0.5	-2.5	-67.64
	495	-5.4	-0.8	-1.4	-0.7	-5.5	-79.28

	NODE	Vxx	Vyy
Max	Cent	-4.4	-0.9
	488	-4.2	-0.4
	489	-4.2	-1.4
	496	-4.6	-1.4
	495	-4.6	-0.4
Min	Cent	-6.9	-2.8
	488	-6.2	-1.8
	489	-6.2	-3.9
	496	-7.5	-3.9
	495	-7.5	-1.8

ELEM	MAT	SEC	LC		NODE	Fxx	Fyy	Fxy	Fmax	Fmin	ANGLE
451	1	1	SX	(RS)	Cent	2.0	0.6	1.2	2.7	-0.2	30.23
					489	0.9	0.5	1.2	2.0	-0.6	40.01
					490	0.9	1.0	1.2	2.2	-0.3	45.50
					497	3.1	1.0	1.2	3.7	0.4	24.78
					496	3.1	0.5	1.2	3.6	-0.0	21.86

NODE	Mxx	Myy	Mxy	Mmax	Mmin	ANGLE
Cent	5.1	1.4	0.8	5.2	1.2	11.91
489	4.5	0.8	0.9	4.7	0.6	12.82
490	4.1	0.6	0.9	4.4	0.4	13.67
497	6.9	3.1	0.8	7.1	2.9	11.63
496	4.7	1.6	0.8	4.9	1.4	13.47

NODE	Vxx	Vyy
Cent	1.6	3.4
489	0.4	1.6
490	0.4	5.2
497	3.5	5.2
496	3.5	1.6

LC		NODE	Fxx	Fyy	Fxy	Fmax	Fmin	ANGLE
SY	(RS)	Cent	0.8	0.9	2.3	3.2	-1.4	45.50
		489	0.3	0.2	2.3	2.5	-2.1	44.12
		490	0.3	1.9	2.3	3.5	-1.3	54.60
		497	1.5	1.9	2.3	4.0	-0.6	47.68
		496	1.5	0.2	2.3	3.2	-1.6	37.04

NODE	Mxx	Myy	Mxy	Mmax	Mmin	ANGLE
Cent	0.6	0.6	0.4	1.0	0.2	44.98
489	0.7	0.9	0.4	1.2	0.4	52.59
490	0.4	1.0	0.3	1.1	0.3	66.33
497	1.5	1.2	0.4	1.8	0.9	36.64
496	1.1	0.9	0.5	1.5	0.5	38.58

NODE	Vxx	Vyy
Cent	2.0	1.3
489	1.1	0.4
490	1.1	2.5
497	3.0	2.5
496	3.0	0.4

LC		NODE	Fxx	Fyy	Fxy	Fmax	Fmin	ANGLE
RC ENV~1	Max	Cent	1.0	1.5	1.6	2.5	0.5	59.28
		489	0.4	1.8	1.6	3.0	0.1	-52.12
		490	0.4	2.3	1.6	3.1	0.1	64.44
		497	1.6	2.3	1.6	3.1	0.9	63.28
		496	1.6	1.8	1.6	2.4	0.9	-73.51
	Min	Cent	-3.2	-0.3	-3.0	0.7	-4.2	-75.32
		489	-1.6	0.4	-3.0	0.7	-3.2	-86.58
		490	-1.6	-1.5	-3.0	0.6	-4.1	-72.18
		497	-4.9	-1.5	-3.0	0.3	-5.6	-68.13
		496	-4.9	0.4	-3.0	0.7	-5.5	-85.99

		NODE	Mxx	Myy	Mxy	Mmax	Mmin	ANGLE
	Max	Cent	6.7	3.4	-0.5	6.8	3.4	-8.71
		489	4.1	2.2	-0.4	4.2	2.0	-9.76
		490	7.1	1.6	-0.3	7.1	1.2	-2.58
		497	11.8	7.6	-0.4	12.4	7.3	-24.37
		496	3.7	3.9	-0.6	4.4	3.2	-62.15
	Min	Cent	-3.4	-0.6	-2.5	1.3	-4.3	-51.88
		489	-4.8	-1.3	-2.5	-0.3	-5.6	-52.42
		490	-1.2	-2.5	-2.1	1.6	-2.9	-52.79
		497	-2.1	1.1	-2.3	2.1	-3.1	-63.54
		496	-5.7	-0.6	-2.6	0.2	-6.4	-64.19

		NODE	Vxx	Vyy
	Max	Cent	-6.0	-0.7
		489	-5.1	-0.5
		490	-5.1	-0.9
		497	-6.3	-0.9
		496	-6.3	-0.5
	Min	Cent	-14.8	-10.5
		489	-10.1	-5.4
		490	-10.1	-15.6
		497	-19.5	-15.6
		496	-19.5	-5.4

LC		NODE	Fxx	Fyy	Fxy	Fmax	Fmin	ANGLE
RC ENV~2	Max	Cent	-0.4	0.9	-0.1	1.4	-0.4	-67.73
		489	-0.4	1.3	-0.1	2.0	-0.4	-64.30
		490	-0.4	0.6	-0.1	1.3	-0.4	-57.85
		497	-0.4	0.6	-0.1	0.9	-0.4	-70.49
		496	-0.4	1.3	-0.1	1.7	-0.4	-73.59
	Min	Cent	-2.3	0.4	-1.5	0.6	-2.9	-74.20
		489	-1.1	0.6	-1.5	0.6	-1.9	-81.85
		490	-1.1	0.1	-1.5	0.5	-2.1	-70.28
		497	-3.4	0.1	-1.5	0.5	-4.0	-75.27
		496	-3.4	0.6	-1.5	0.6	-3.9	-81.97

		NODE	Mxx	Myy	Mxy	Mmax	Mmin	ANGLE
	Max	Cent	3.5	2.3	-1.0	4.7	0.8	-33.23
		489	1.0	1.3	-0.9	2.6	-0.9	-42.22
		490	4.7	0.6	-0.9	5.1	0.1	-15.09
		497	8.2	5.7	-1.0	9.0	4.9	-25.94
		496	0.1	2.5	-1.0	3.4	-1.0	-63.54
	Min	Cent	0.0	0.0	-1.9	1.3	-1.0	-52.78
		489	-1.8	-0.6	-1.8	0.1	-2.2	-54.90
		490	1.6	-1.5	-1.6	2.0	-1.8	-21.24
		497	2.7	1.8	-1.7	3.5	1.2	-36.38
		496	-2.5	0.0	-1.9	0.6	-2.8	-65.83

		NODE	Vxx	Vyy
	Max	Cent	-7.6	-2.9
		489	-6.1	-1.4
		490	-6.1	-4.3
		497	-8.8	-4.3
		496	-8.8	-1.4
	Min	Cent	-10.9	-7.6
		489	-7.5	-3.9
		490	-7.5	-11.2
		497	-14.3	-11.2
		496	-14.3	-3.9

ELEM	MAT	SEC	LC		NODE	Fxx	Fyy	Fxy	Fmax	Fmin	ANGLE
452	1	1	SX (RS)		Cent	0.7	0.8	0.9	1.7	-0.2	46.68
					490	1.2	0.8	0.9	1.9	0.0	38.74
					205	1.2	1.1	0.9	2.1	0.2	43.58
					208	0.5	1.1	0.9	1.7	-0.2	54.27
					497	0.5	0.8	0.9	1.6	-0.3	49.64

	NODE	Mxx	Myy	Mxy	Mmax	Mmin	ANGLE
	Cent	2.9	1.0	1.4	3.6	0.3	28.43
	490	3.9	0.6	1.7	4.6	-0.1	22.60
	205	4.0	1.3	1.0	4.4	0.9	18.21
	208	4.3	1.1	0.9	4.5	0.8	14.82
	497	7.5	3.2	1.6	8.0	2.7	17.94

	NODE	Vxx	Vyy
	Cent	9.9	2.5
	490	0.2	5.2
	205	0.2	0.2
	208	19.6	0.2
	497	19.6	5.2

LC		NODE	Fxx	Fyy	Fxy	Fmax	Fmin	ANGLE
SY (RS)		Cent	0.7	2.5	1.9	3.7	-0.5	57.53
		490	0.5	1.6	1.9	3.0	-0.9	53.57
		205	0.5	3.4	1.9	4.3	-0.5	63.66
		208	1.1	3.4	1.9	4.4	0.0	60.45
		497	1.1	1.6	1.9	3.3	-0.6	49.11

	NODE	Mxx	Myy	Mxy	Mmax	Mmin	ANGLE
	Cent	0.8	1.0	0.2	1.1	0.6	58.25
	490	0.6	0.9	0.2	1.0	0.5	69.49
	205	0.8	1.0	0.3	1.2	0.6	52.96
	208	3.0	2.7	0.3	3.2	2.5	32.31
	497	1.5	0.8	0.1	1.5	0.8	10.51

	NODE	Vxx	Vyy
	Cent	3.8	3.8
	490	0.6	2.5
	205	0.6	5.4
	208	7.2	5.4
	497	7.2	2.5

LC		NODE	Fxx	Fyy	Fxy	Fmax	Fmin	ANGLE
RC ENV~1	Max	Cent	0.3	3.2	1.4	3.7	0.1	68.19
		490	0.5	2.2	1.4	2.8	0.3	65.32
		205	0.5	4.2	1.4	4.6	0.4	73.82
		208	0.8	4.2	1.4	4.7	0.3	70.13
		497	0.8	2.2	1.4	3.0	0.1	57.90
	Min	Cent	-1.3	-1.8	-2.4	0.6	-3.9	-88.32
		490	-2.1	-1.1	-2.4	0.6	-3.5	-77.16
		205	-2.1	-2.5	-2.4	0.4	-4.4	-87.79
		208	-1.3	-2.5	-2.4	0.4	-4.4	-88.24
		497	-1.3	-1.1	-2.4	0.6	-3.6	-76.21

	NODE	Mxx	Myy	Mxy	Mmax	Mmin	ANGLE
Max	Cent	9.9	3.4	0.8	9.9	3.3	-1.79
	490	7.1	1.6	1.2	7.3	1.6	10.92
	205	12.6	2.4	0.6	12.6	2.4	-1.44
	208	10.2	5.9	0.2	10.2	5.9	1.49
	497	13.5	8.0	0.8	13.6	7.9	-6.90
Min	Cent	2.6	-0.1	-1.9	4.0	-0.2	-35.39
	490	-0.7	-2.4	-2.1	1.9	-2.5	-49.93
	205	3.1	-2.0	-1.5	3.7	-2.0	-21.17
	208	1.7	0.5	-1.7	3.3	0.1	-20.86
	497	-1.8	1.2	-2.3	2.5	-3.1	-61.15

	NODE	Vxx	Vyy

Max	Cent	6.1	-1.4
	490	-6.3	-0.9
	205	-6.3	1.0
	208	18.8	1.0
	497	18.8	-0.9
Min	Cent	-13.7	-12.6
	490	-10.6	-15.6
	205	-10.6	-9.8
	208	-20.3	-9.8
	497	-20.3	-15.6

LC		NODE	Fxx	Fyy	Fxy	Fmax	Fmin	ANGLE
RC ENV~2	Max	Cent	-0.4	1.0	-0.1	1.5	-0.4	-65.02
		490	-0.3	0.7	-0.1	1.1	-0.3	-66.10
		205	-0.3	1.3	-0.1	1.7	-0.3	-70.45
		208	-0.2	1.3	-0.1	1.9	-0.4	-63.86
		497	-0.2	0.7	-0.1	1.3	-0.4	-57.10
	Min	Cent	-0.9	0.4	-1.1	0.5	-1.5	-83.91
		490	-1.5	0.3	-1.1	0.5	-2.0	-75.72
		205	-1.5	0.4	-1.1	0.4	-1.9	-82.96
		208	-0.6	0.4	-1.1	0.4	-1.0	-83.60
		497	-0.6	0.3	-1.1	0.5	-1.2	-74.04

	NODE	Mxx	Myy	Mxy	Mmax	Mmin	ANGLE
Max	Cent	7.3	2.5	-0.2	7.3	2.4	-2.48
	490	4.9	0.7	-0.1	4.9	0.6	-2.60
	205	9.3	1.2	-0.0	9.4	1.2	-1.75
	208	6.9	3.3	-0.4	7.0	3.1	-5.44
	497	9.8	6.0	-0.6	9.8	5.9	-8.22
Min	Cent	4.6	0.3	-0.6	4.6	0.3	-7.53
	490	1.9	-1.4	-0.5	2.0	-1.4	-12.53
	205	5.9	-1.1	-0.6	5.9	-1.1	-1.59
	208	5.3	1.4	-0.9	5.5	1.4	-15.73
	497	3.5	2.0	-0.8	3.9	1.8	-26.63

	NODE	Vxx	Vyy
Max	Cent	-0.5	-4.1
	490	-6.9	-4.3
	205	-6.9	-4.0
	208	6.8	-4.0
	497	6.8	-4.3
Min	Cent	-6.7	-9.1
	490	-8.0	-11.2
	205	-8.0	-7.0
	208	-6.3	-7.0
	497	-6.3	-11.2

ELEM	MAT	SEC	LC		NODE	Fxx	Fyy	Fxy	Fmax	Fmin	ANGLE
453	1	1	SX (RS)		Cent	4.8	0.2	2.5	5.9	-0.9	23.84
					448	1.0	1.0	2.5	3.5	-1.5	44.53
					491	1.0	0.5	2.5	3.3	-1.7	42.07
					498	10.6	0.5	2.5	11.2	-0.1	13.23
					9	10.6	1.0	2.5	11.2	0.3	13.73

	NODE	Mxx	Myy	Mxy	Mmax	Mmin	ANGLE
	Cent	12.6	3.2	3.3	13.7	2.2	17.72
	448	9.1	1.8	10.6	16.6	-5.7	35.52
	491	5.5	0.4	1.6	5.9	-0.0	15.80
	498	6.5	5.6	2.1	8.2	3.9	38.68
	9	47.6	9.5	10.0	50.1	7.0	13.89

	NODE	Vxx	Vyy
	Cent	23.3	5.5
	448	25.6	0.0
	491	25.6	11.1
	498	72.2	11.1
	9	72.2	0.0

LC		NODE	Fxx	Fyy	Fxy	Fmax	Fmin	ANGLE

```
      SY (RS)   Cent        0.6        6.1        4.3        8.5       -1.8       61.25
                 448        0.4       14.4        4.3       15.6       -0.9       74.10
                 491        0.4        2.1        4.3        5.7       -3.2       50.76
                 498        1.5        2.1        4.3        6.2       -2.5       46.95
                   9        1.5       14.4        4.3       15.7        0.2       72.95

                NODE        Mxx        Myy        Mxy       Mmax       Mmin      ANGLE
           ---- ------ ---------- ---------- ---------- ---------- ---------- ----------
                Cent        2.4        9.9        3.4       11.2        1.1       68.61
                 448        5.4        6.3        1.4        7.3        4.4       53.96
                 491        1.4        2.5        0.7        2.9        1.0       63.75
                 498        1.8       10.7        9.5       16.8       -4.3       57.53
                   9        7.4       41.4        8.9       43.6        5.2       76.19

                NODE        Vxx        Vyy
           ---- ------ ---------- ----------
                Cent        4.3       20.8
                 448       10.7       66.7
                 491       10.7       25.0
                 498        2.2       25.0
                   9        2.2       66.7


        LC        NODE        Fxx        Fyy        Fxy       Fmax       Fmin      ANGLE
-------- ---- ------ ---------- ---------- ---------- ---------- ---------- ----------
RC ENV~1  Max   Cent        4.0        7.2        4.2        9.1       -0.1       65.62
                 448        0.3       15.6        4.2       16.7       -1.1       76.17
                 491        0.3        2.9        4.2        5.8       -1.1       55.86
                 498        9.8        2.9        4.2       10.4        0.7       14.68
                   9        9.8       15.6        4.2       16.7        1.5       75.30
           Min   Cent       -5.6       -5.1       -4.5        1.3       -8.1      -84.81
                 448       -2.1      -13.1       -4.5        0.4      -14.6      -18.41
                 491       -2.1       -1.3       -4.5        1.0       -5.7      -83.79
                 498      -11.5       -1.3       -4.5        0.8      -12.0      -77.86
                   9      -11.5      -13.1       -4.5       -0.7      -14.7      -19.92

                NODE        Mxx        Myy        Mxy       Mmax       Mmin      ANGLE
           ---- ------ ---------- ---------- ---------- ---------- ---------- ----------
           Max   Cent       16.3       16.7        5.3       19.3       11.0       29.41
                 448       11.9        5.7       11.9       19.5        4.0       32.85
                 491        7.2        9.2        4.8       13.1        3.3       50.90
                 498        2.0       16.1       10.9       21.1        0.8       65.39
                   9       63.0       59.5       10.7       66.0       41.6       15.58
           Min   Cent       -8.9       -3.0       -1.6        1.8       -9.1      -18.40
                 448       -6.3       -7.0       -9.3       -2.7      -13.9       -1.23
                 491       -4.3        2.1        0.4        2.6       -4.4       66.66
                 498      -11.0       -5.3       -8.2       -0.2      -14.0      -86.20
                   9      -32.2      -23.4       -9.3       10.0      -34.2      -13.81

                NODE        Vxx        Vyy
           ---- ------ ---------- ----------
           Max   Cent       44.4        3.5
                 448       30.4       35.6
                 491       30.4       21.4
                 498      103.3       21.4
                   9      103.3       35.6
           Min   Cent       -5.4      -40.4
                 448      -20.8      -97.7
                 491      -20.8      -28.7
                 498      -41.1      -28.7
                   9      -41.1      -97.7


        LC        NODE        Fxx        Fyy        Fxy       Fmax       Fmin      ANGLE
-------- ---- ------ ---------- ---------- ---------- ---------- ---------- ----------
RC ENV~2  Max   Cent        0.2        1.7        0.3        1.7       -0.2      -79.57
                 448       -0.7        2.1        0.3        2.1       -0.8      -82.13
                 491       -0.7        1.4        0.3        1.4       -0.8       88.54
                 498        1.1        1.4        0.3        1.5        0.2      -35.11
                   9        1.1        2.1        0.3        2.2        0.6      -79.19
           Min   Cent       -2.2        1.0       -0.7        1.0       -2.2      -85.00
                 448       -1.5        1.2       -0.7        1.3       -1.5       86.64
                 491       -1.5        0.6       -0.7        0.7       -1.5      -84.05
                 498       -3.2        0.6       -0.7        0.7       -3.2      -84.26
                   9       -3.2        1.2       -0.7        1.3       -3.2       87.86

                NODE        Mxx        Myy        Mxy       Mmax       Mmin      ANGLE
           ---- ------ ---------- ---------- ---------- ---------- ---------- ----------
           Max   Cent       10.0       11.0        3.1       13.2        7.8       50.12
```

```
                                    448        7.7       -0.6        3.1        8.5       -1.0      16.37
                                    491        5.0        6.8        3.5        9.5        2.3      52.55
                                    498       -3.6        8.8        2.5        9.2       -4.0      79.30
                                      9       32.9       30.1        2.2       32.9       30.1       1.31
                              Min   Cent        1.6        5.4        1.3        6.3        0.8      63.73
                                    448        1.9       -2.5       -0.5        1.9       -2.8      -8.05
                                    491        0.2        3.4        1.3        4.0       -0.2      66.78
                                    498       -5.8        3.5        0.6        3.5       -5.8      86.06
                                      9        7.8       15.9       -1.2       16.3        7.4      77.52

                                   NODE        Vxx        Vyy
                              ---- ------ ---------- ----------
                              Max   Cent       31.9      -16.7
                                    448       10.4      -30.8
                                    491       10.4       -1.7
                                    498       58.4       -1.7
                                      9       58.4      -30.8
                              Min   Cent       14.5      -29.1
                                    448        1.2      -51.1
                                    491        1.2       -7.1
                                    498       19.8       -7.1
                                      9       19.8      -51.1

  ELEM   MAT    SEC        LC        NODE        Fxx        Fyy        Fxy       Fmax       Fmin      ANGLE
------ ------ ------ -------- ---- ------ ---------- ---------- ---------- ---------- ---------- ----------
   454      1      1       SX (RS)   Cent        2.6        0.6        0.4        2.7        0.5       9.64
                                    491        2.1        1.0        0.4        2.2        0.9      16.08
                                    492        2.1        0.2        0.4        2.2        0.1      10.33
                                    499        3.1        0.2        0.4        3.2        0.2       6.93
                                    498        3.1        1.0        0.4        3.2        0.9       9.24

                                   NODE        Mxx        Myy        Mxy       Mmax       Mmin      ANGLE
                              ---- ------ ---------- ---------- ---------- ---------- ---------- ----------
                                   Cent        4.0        2.2        0.6        4.2        2.0      18.00
                                    491        4.8        0.6        0.6        4.8        0.5       7.61
                                    492        2.9        1.9        0.5        3.1        1.7      21.81
                                    499        1.9        2.0        0.5        2.4        1.5      47.52
                                    498        6.7        5.6        0.6        6.9        5.4      24.01

                                   NODE        Vxx        Vyy
                              ---- ------ ---------- ----------
                                   Cent        6.3        5.8
                                    491        4.7       11.1
                                    492        4.7        0.5
                                    499        8.0        0.5
                                    498        8.0       11.1


                                     LC        NODE        Fxx        Fyy        Fxy       Fmax       Fmin      ANGLE
                              -------- ---- ------ ---------- ---------- ---------- ---------- ---------- ----------
                                     SY (RS)   Cent        0.7        1.0        1.4        2.3       -0.6      47.33
                                    491        1.3        2.1        1.4        3.2        0.2      52.72
                                    492        1.3        0.4        1.4        2.4       -0.6      36.21
                                    499        0.2        0.4        1.4        1.7       -1.1      47.44
                                    498        0.2        2.1        1.4        2.9       -0.6      62.08

                                   NODE        Mxx        Myy        Mxy       Mmax       Mmin      ANGLE
                              ---- ------ ---------- ---------- ---------- ---------- ---------- ----------
                                   Cent        0.3        2.0        1.2        2.7       -0.3      62.00
                                    491        2.3        3.2        1.7        4.5        1.0      52.39
                                    492        1.3        0.9        1.7        2.8       -0.6      41.03
                                    499        0.5        0.7        0.2        0.9        0.3      56.73
                                    498        2.1       10.8        0.2       10.8        2.1      88.60

                                   NODE        Vxx        Vyy
                              ---- ------ ---------- ----------
                                   Cent        2.3       11.8
                                    491        5.1       25.0
                                    492        5.1        1.5
                                    499        0.5        1.5
                                    498        0.5       25.0


                                     LC        NODE        Fxx        Fyy        Fxy       Fmax       Fmin      ANGLE
                              -------- ---- ------ ---------- ---------- ---------- ---------- ---------- ----------
                              RC ENV~1  Max   Cent        1.8        2.0        1.3        2.5        1.2      62.53
                                    491        1.4        2.9        1.3        3.5        1.2      65.52
                                    492        1.4        1.9        1.3        2.3        0.9      52.39
```

		499	2.2	1.9	1.3	2.3	1.0	12.86
		498	2.2	2.9	1.3	3.3	1.6	71.73
	Min	Cent	-3.4	-0.1	-1.5	0.3	-3.5	-83.35
		491	-2.8	-1.3	-1.5	-0.1	-3.2	-52.18
		492	-2.8	0.4	-1.5	0.7	-2.9	-83.00
		499	-4.0	0.4	-1.5	0.7	-4.0	-84.68
		498	-4.0	-1.3	-1.5	-0.1	-4.0	-83.58

		NODE	Mxx	Myy	Mxy	Mmax	Mmin	ANGLE
	Max	Cent	1.7	7.9	1.6	8.0	1.5	82.32
		491	5.0	8.8	2.7	10.1	3.8	63.40
		492	-1.1	4.2	2.2	4.3	-1.3	79.87
		499	-2.9	5.0	0.2	5.0	-2.9	-88.74
		498	6.1	16.9	0.8	16.9	6.0	88.55
	Min	Cent	-6.3	1.6	-0.9	1.6	-6.3	-88.08
		491	-4.6	1.2	-0.7	1.4	-4.6	-78.03
		492	-6.9	0.0	-1.2	0.0	-6.9	-88.59
		499	-7.2	0.3	-1.4	0.5	-7.3	-79.57
		498	-7.2	-4.6	-0.8	-2.7	-7.3	-1.03

		NODE	Vxx	Vyy
	Max	Cent	16.2	9.4
		491	16.3	21.4
		492	16.3	0.4
		499	16.1	0.4
		498	16.1	21.4
	Min	Cent	0.2	-14.1
		491	1.6	-28.7
		492	1.6	-2.7
		499	-1.6	-2.7
		498	-1.6	-28.7

LC		NODE	Fxx	Fyy	Fxy	Fmax	Fmin	ANGLE
RC ENV~2	Max	Cent	-0.3	1.4	0.0	1.4	-0.4	-88.77
		491	-0.4	1.5	0.0	1.5	-0.4	-88.71
		492	-0.4	1.4	0.0	1.4	-0.4	-88.69
		499	-0.3	1.4	0.0	1.4	-0.4	-88.82
		498	-0.3	1.5	0.0	1.5	-0.4	-88.84
	Min	Cent	-1.9	0.7	-0.2	0.7	-1.9	-79.96
		491	-1.7	0.5	-0.2	0.6	-1.7	-78.84
		492	-1.7	0.8	-0.2	0.8	-1.7	-83.38
		499	-2.0	0.8	-0.2	0.8	-2.0	-83.60
		498	-2.0	0.5	-0.2	0.6	-2.0	-78.55

		NODE	Mxx	Myy	Mxy	Mmax	Mmin	ANGLE
	Max	Cent	-0.8	5.8	0.9	6.0	-0.9	82.72
		491	3.4	6.5	1.8	7.4	2.5	65.40
		492	-3.8	3.0	1.1	3.2	-4.0	80.84
		499	-4.8	3.8	-0.2	3.8	-4.8	-88.85
		498	2.5	10.1	0.5	10.1	2.5	86.23
	Min	Cent	-3.0	2.1	-0.3	2.2	-3.0	-87.11
		491	-0.6	3.2	0.4	3.2	-0.7	82.94
		492	-4.6	0.4	-0.0	0.4	-4.6	-89.85
		499	-5.4	0.6	-0.9	0.8	-5.5	-81.26
		498	-1.7	4.3	-0.5	4.4	-1.7	-86.46

		NODE	Vxx	Vyy
	Max	Cent	11.6	-1.3
		491	11.7	-1.7
		492	11.7	-0.7
		499	11.5	-0.7
		498	11.5	-1.7
	Min	Cent	5.6	-4.6
		491	6.0	-7.1
		492	6.0	-2.0
		499	5.1	-2.0
		498	5.1	-7.1

ELEM	MAT	SEC	LC		NODE	Fxx	Fyy	Fxy	Fmax	Fmin	ANGLE
455	1	1	SX (RS)		Cent	1.8	0.2	0.4	1.9	0.2	13.25
					492	1.7	0.3	0.4	1.8	0.2	15.33

	493	1.7	0.2	0.4	1.8	0.1	14.43
	500	2.0	0.2	0.4	2.1	0.1	12.03
	499	2.0	0.3	0.4	2.1	0.2	12.67

	NODE	Mxx	Myy	Mxy	Mmax	Mmin	ANGLE
	Cent	2.2	1.6	0.4	2.4	1.4	25.41
	492	2.8	1.9	0.6	3.0	1.6	26.31
	493	1.9	1.0	0.5	2.2	0.8	23.28
	500	2.0	1.3	0.3	2.1	1.2	17.76
	499	2.7	2.2	0.3	2.8	2.0	24.42

	NODE	Vxx	Vyy
	Cent	2.9	0.6
	492	3.0	0.5
	493	3.0	0.7
	500	2.8	0.7
	499	2.8	0.5

LC		NODE	Fxx	Fyy	Fxy	Fmax	Fmin	ANGLE
SY (RS)		Cent	0.5	0.3	1.4	1.8	-0.9	42.61
		492	0.7	0.4	1.4	1.9	-0.8	41.72
		493	0.7	0.4	1.4	1.9	-0.8	42.11
		500	0.4	0.4	1.4	1.8	-1.0	45.52
		499	0.4	0.4	1.4	1.8	-1.0	45.13

	NODE	Mxx	Myy	Mxy	Mmax	Mmin	ANGLE
	Cent	0.4	0.8	1.1	1.7	-0.5	51.47
	492	0.7	0.8	1.0	1.7	-0.3	46.37
	493	0.6	1.2	0.7	1.7	0.1	55.59
	500	0.3	1.6	1.2	2.3	-0.4	59.85
	499	0.4	0.7	1.5	2.0	-1.0	48.13

	NODE	Vxx	Vyy
	Cent	0.3	0.2
	492	0.4	1.5
	493	0.4	1.3
	500	0.3	1.3
	499	0.3	1.5

LC		NODE	Fxx	Fyy	Fxy	Fmax	Fmin	ANGLE
RC ENV~1	Max	Cent	1.0	1.9	1.3	1.9	0.7	-87.17
		492	0.9	2.0	1.3	2.0	0.7	58.82
		493	0.9	1.8	1.3	2.0	0.7	59.00
		500	1.1	1.8	1.3	1.9	0.8	62.78
		499	1.1	2.0	1.3	2.0	0.8	-87.33
	Min	Cent	-2.7	0.5	-1.5	0.7	-2.7	-81.47
		492	-2.4	0.5	-1.5	0.6	-2.5	-80.64
		493	-2.4	0.4	-1.5	0.7	-2.5	-80.88
		500	-2.9	0.4	-1.5	0.7	-3.0	-82.03
		499	-2.9	0.5	-1.5	0.6	-3.0	-81.84

	NODE	Mxx	Myy	Mxy	Mmax	Mmin	ANGLE
Max	Cent	-2.3	3.5	0.9	3.6	-2.3	87.75
	492	-0.8	4.2	1.1	4.3	-0.8	82.99
	493	-3.3	2.5	0.6	2.6	-3.3	84.88
	500	-3.6	3.1	0.8	3.1	-3.6	84.68
	499	-1.0	5.6	1.2	5.6	-1.0	-89.00
Min	Cent	-6.7	-0.5	-1.2	-0.3	-6.7	-80.71
	492	-6.3	0.2	-0.9	0.3	-6.3	-82.52
	493	-8.5	-1.2	-0.8	-1.2	-8.5	-86.71
	500	-9.1	-1.5	-1.6	-1.2	-9.1	-78.82
	499	-6.4	0.6	-1.7	0.7	-6.4	-85.50

	NODE	Vxx	Vyy
Max	Cent	7.6	-0.1
	492	7.3	0.4
	493	7.3	1.0
	500	7.9	1.0
	499	7.9	0.4

	Min	Cent	-0.0	-1.8
		492	-0.2	-2.7
		493	-0.2	-1.6
		500	0.1	-1.6
		499	0.1	-2.7

LC		NODE	Fxx	Fyy	Fxy	Fmax	Fmin	ANGLE
RC ENV~2	Max	Cent	-0.7	1.4	-0.1	1.4	-0.7	-87.12
		492	-0.7	1.4	-0.1	1.4	-0.7	-87.05
		493	-0.7	1.3	-0.1	1.4	-0.7	-85.83
		500	-0.7	1.3	-0.1	1.4	-0.8	-86.12
		499	-0.7	1.4	-0.1	1.4	-0.8	-87.29
	Min	Cent	-1.7	0.7	-0.2	0.7	-1.7	-84.58
		492	-1.6	0.7	-0.2	0.7	-1.6	-83.64
		493	-1.6	0.7	-0.2	0.7	-1.6	-86.54
		500	-1.9	0.7	-0.2	0.7	-1.9	-86.85
		499	-1.9	0.7	-0.2	0.7	-1.9	-84.01

	NODE	Mxx	Myy	Mxy	Mmax	Mmin	ANGLE
Max	Cent	-4.5	2.5	0.1	2.5	-4.5	89.12
	492	-3.0	3.2	0.5	3.2	-3.0	85.36
	493	-5.2	1.5	0.3	1.5	-5.2	89.55
	500	-5.6	1.7	-0.3	1.7	-5.6	-87.47
	499	-3.1	4.2	-0.1	4.2	-3.1	-89.06
Min	Cent	-5.0	0.1	-0.7	0.1	-5.0	-82.39
	492	-4.0	0.5	-0.5	0.6	-4.0	-84.25
	493	-6.3	-0.5	-0.6	-0.5	-6.3	-87.36
	500	-6.8	-0.7	-0.9	-0.5	-6.8	-80.50
	499	-4.1	0.9	-0.8	1.0	-4.2	-80.77

	NODE	Vxx	Vyy
Max	Cent	5.4	-0.3
	492	5.2	-0.7
	493	5.2	0.1
	500	5.6	0.1
	499	5.6	-0.7
Min	Cent	2.3	-1.3
	492	2.2	-2.0
	493	2.2	-0.7
	500	2.4	-0.7
	499	2.4	-2.0

ELEM	MAT	SEC	LC		NODE	Fxx	Fyy	Fxy	Fmax	Fmin	ANGLE
456	1	1	SX	(RS)	Cent	1.6	0.2	0.4	1.7	0.1	15.46
					493	1.5	0.2	0.4	1.6	0.1	16.34
					494	1.5	0.3	0.4	1.7	0.2	17.40
					501	1.7	0.3	0.4	1.9	0.2	15.22
					500	1.7	0.2	0.4	1.9	0.1	14.38

	NODE	Mxx	Myy	Mxy	Mmax	Mmin	ANGLE
	Cent	2.2	1.1	0.4	2.3	1.0	17.18
	493	2.0	1.0	0.4	2.2	0.8	21.14
	494	2.5	1.0	0.5	2.7	0.9	16.04
	501	2.6	1.2	0.3	2.7	1.1	12.06
	500	2.1	1.4	0.3	2.2	1.3	18.56

	NODE	Vxx	Vyy
	Cent	2.2	0.5
	493	2.1	0.7
	494	2.1	0.3
	501	2.3	0.3
	500	2.3	0.7

LC		NODE	Fxx	Fyy	Fxy	Fmax	Fmin	ANGLE
SY	(RS)	Cent	0.5	0.4	1.4	1.9	-1.0	43.20
		493	0.6	0.4	1.4	1.9	-0.9	42.86
		494	0.6	0.3	1.4	1.9	-1.0	41.38
		501	0.4	0.3	1.4	1.8	-1.1	43.50
		500	0.4	0.4	1.4	1.8	-1.0	44.99

	NODE	Mxx	Myy	Mxy	Mmax	Mmin	ANGLE
	Cent	0.3	1.3	0.7	1.6	0.0	63.03
	493	0.4	1.1	0.7	1.6	-0.0	58.11
	494	0.5	1.3	0.6	1.6	0.1	61.22
	501	0.3	1.1	0.6	1.4	0.0	62.85
	500	0.2	1.7	0.7	1.9	-0.0	68.55

	NODE	Vxx	Vyy
	Cent	0.1	0.6
	493	0.1	1.3
	494	0.1	0.2
	501	0.2	0.2
	500	0.2	1.3

LC		NODE	Fxx	Fyy	Fxy	Fmax	Fmin	ANGLE
RC ENV~1	Max	Cent	0.7	1.8	1.3	1.9	0.6	60.97
		493	0.7	1.8	1.3	2.0	0.5	59.98
		494	0.7	1.9	1.3	1.9	0.6	-85.08
		501	0.8	1.9	1.3	1.9	0.6	-85.45
		500	0.8	1.8	1.3	1.9	0.6	62.82
	Min	Cent	-2.5	0.5	-1.6	0.7	-2.6	-80.11
		493	-2.4	0.4	-1.6	0.7	-2.5	-79.57
		494	-2.4	0.5	-1.6	0.6	-2.5	-79.32
		501	-2.7	0.5	-1.6	0.6	-2.8	-80.43
		500	-2.7	0.4	-1.6	0.7	-2.8	-80.62

	NODE	Mxx	Myy	Mxy	Mmax	Mmin	ANGLE
Max	Cent	-2.9	2.6	0.3	2.6	-2.9	88.04
	493	-3.0	2.5	0.4	2.5	-3.0	86.62
	494	-2.6	2.4	0.2	2.4	-2.6	88.02
	501	-2.7	2.3	0.1	2.3	-2.7	-87.81
	500	-3.0	3.2	0.2	3.2	-3.0	88.32
Min	Cent	-8.5	-1.6	-1.2	-1.5	-8.5	-82.91
	493	-7.7	-1.2	-1.1	-1.0	-7.7	-84.24
	494	-9.0	-1.9	-1.1	-1.8	-9.0	-84.12
	501	-9.3	-2.2	-1.3	-2.0	-9.3	-81.41
	500	-7.9	-1.3	-1.2	-1.1	-7.9	-78.70

	NODE	Vxx	Vyy
Max	Cent	2.4	0.4
	493	2.3	1.0
	494	2.3	0.6
	501	2.4	0.6
	500	2.4	1.0
Min	Cent	-2.1	-0.8
	493	-2.0	-1.6
	494	-2.0	-0.4
	501	-2.1	-0.4
	500	-2.1	-1.6

LC		NODE	Fxx	Fyy	Fxy	Fmax	Fmin	ANGLE
RC ENV~2	Max	Cent	-0.8	1.3	-0.1	1.4	-0.9	-85.22
		493	-0.8	1.3	-0.1	1.3	-0.8	-85.63
		494	-0.8	1.4	-0.1	1.4	-0.8	-85.10
		501	-0.9	1.4	-0.1	1.4	-0.9	-85.46
		500	-0.9	1.3	-0.1	1.3	-0.9	-85.99
	Min	Cent	-1.8	0.7	-0.3	0.7	-1.8	-85.21
		493	-1.7	0.7	-0.3	0.7	-1.7	-83.88
		494	-1.7	0.7	-0.3	0.7	-1.7	-84.87
		501	-1.9	0.7	-0.3	0.7	-1.9	-85.33
		500	-1.9	0.7	-0.3	0.7	-1.9	-84.35

	NODE	Mxx	Myy	Mxy	Mmax	Mmin	ANGLE
Max	Cent	-5.1	1.5	-0.2	1.5	-5.1	-86.65
	493	-5.0	1.6	-0.0	1.6	-5.0	-88.35
	494	-5.0	1.3	-0.1	1.3	-5.0	-86.62
	501	-5.1	1.4	-0.4	1.4	-5.2	-85.75
	500	-5.1	1.8	-0.3	1.8	-5.2	-87.25
Min	Cent	-6.3	-0.8	-0.8	-0.7	-6.3	-83.78

493	-5.8	-0.5	-0.7	-0.4	-5.8	-85.00
494	-6.7	-1.0	-0.8	-0.9	-6.7	-84.73
501	-6.9	-1.2	-0.9	-1.1	-6.9	-82.42
500	-5.9	-0.6	-0.9	-0.4	-5.9	-80.39

	NODE	Vxx	Vyy
Max	Cent	1.4	0.2
	493	1.3	0.1
	494	1.3	0.3
	501	1.4	0.3
	500	1.4	0.1
Min	Cent	-0.4	-0.5
	493	-0.4	-0.7
	494	-0.4	-0.3
	501	-0.5	-0.3
	500	-0.5	-0.7

ELEM	MAT	SEC	LC		NODE	Fxx	Fyy	Fxy	Fmax	Fmin	ANGLE
457	1	1	SX	(RS)	Cent	1.8	0.4	0.4	1.9	0.3	14.72
					494	1.7	0.2	0.4	1.8	0.1	14.56
					495	1.7	0.5	0.4	1.8	0.4	17.36
					502	1.9	0.5	0.4	2.0	0.4	14.99
					501	1.9	0.2	0.4	2.0	0.1	12.82

	NODE	Mxx	Myy	Mxy	Mmax	Mmin	ANGLE
	Cent	2.9	1.2	0.5	3.0	1.1	14.01
	494	2.4	1.0	0.5	2.6	0.9	17.65
	495	3.4	1.3	0.5	3.5	1.2	13.48
	502	3.5	1.6	0.4	3.6	1.5	11.21
	501	2.5	1.2	0.4	2.5	1.1	14.52

	NODE	Vxx	Vyy
	Cent	2.1	0.4
	494	2.0	0.3
	495	2.0	0.6
	502	2.1	0.6
	501	2.1	0.3

LC		NODE	Fxx	Fyy	Fxy	Fmax	Fmin	ANGLE
SY	(RS)	Cent	0.6	0.2	1.5	1.9	-1.1	41.29
		494	0.7	0.3	1.5	2.0	-1.1	41.29
		495	0.7	0.2	1.5	2.0	-1.1	40.57
		502	0.6	0.2	1.5	1.9	-1.1	41.27
		501	0.6	0.3	1.5	2.0	-1.1	42.00

	NODE	Mxx	Myy	Mxy	Mmax	Mmin	ANGLE
	Cent	0.4	1.2	0.6	1.5	0.1	63.81
	494	0.5	1.3	0.6	1.6	0.2	62.39
	495	0.5	1.2	0.6	1.5	0.2	61.14
	502	0.4	1.4	0.5	1.6	0.2	65.47
	501	0.2	1.1	0.6	1.4	-0.0	64.55

	NODE	Vxx	Vyy
	Cent	0.3	0.2
	494	0.3	0.2
	495	0.3	0.5
	502	0.3	0.5
	501	0.3	0.2

LC		NODE	Fxx	Fyy	Fxy	Fmax	Fmin	ANGLE
RC ENV~1	Max	Cent	0.8	1.9	1.3	1.9	0.7	-84.34
		494	0.7	1.8	1.3	1.9	0.6	58.75
		495	0.7	2.0	1.3	2.1	0.7	-84.21
		502	0.8	2.0	1.3	2.1	0.7	-84.71
		501	0.8	1.8	1.3	1.8	0.7	60.78
	Min	Cent	-3.0	0.5	-1.7	0.6	-3.1	-80.09
		494	-2.8	0.6	-1.7	0.7	-2.8	-79.81
		495	-2.8	0.4	-1.7	0.5	-2.8	-79.13

502	-3.3	0.4	-1.7	0.5	-3.3	-80.32
501	-3.3	0.6	-1.7	0.7	-3.3	-80.87

	NODE	Mxx	Myy	Mxy	Mmax	Mmin	ANGLE
Max	Cent	-1.5	2.6	0.0	2.6	-1.5	89.93
	494	-2.7	2.4	0.0	2.4	-2.7	89.82
	495	-0.3	2.8	-0.0	2.8	-0.3	-88.73
	502	-0.3	3.2	-0.0	3.2	-0.3	-87.57
	501	-2.8	2.3	0.1	2.3	-2.8	-88.53
Min	Cent	-8.0	-1.8	-1.2	-1.7	-8.0	-81.99
	494	-8.8	-1.8	-1.3	-1.7	-8.8	-82.79
	495	-7.2	-1.5	-1.3	-1.4	-7.3	-81.34
	502	-7.3	-1.8	-1.1	-1.6	-7.4	-81.05
	501	-9.0	-2.1	-1.1	-2.0	-9.0	-82.56

	NODE	Vxx	Vyy
Max	Cent	-0.4	0.5
	494	-0.4	0.6
	495	-0.4	0.4
	502	-0.3	0.4
	501	-0.3	0.6
Min	Cent	-4.5	-0.6
	494	-4.4	-0.4
	495	-4.4	-0.9
	502	-4.6	-0.9
	501	-4.6	-0.4

LC		NODE	Fxx	Fyy	Fxy	Fmax	Fmin	ANGLE
RC ENV~2	Max	Cent	-0.7	1.4	-0.1	1.4	-0.7	-84.34
		494	-0.6	1.3	-0.1	1.3	-0.6	-83.92
		495	-0.6	1.5	-0.1	1.5	-0.7	-84.21
		502	-0.8	1.5	-0.1	1.5	-0.8	-84.71
		501	-0.8	1.3	-0.1	1.3	-0.8	-84.47
	Min	Cent	-2.2	0.7	-0.4	0.7	-2.2	-83.84
		494	-2.0	0.7	-0.4	0.7	-2.0	-83.67
		495	-2.0	0.6	-0.4	0.6	-2.0	-83.68
		502	-2.3	0.6	-0.4	0.6	-2.4	-84.22
		501	-2.3	0.7	-0.4	0.7	-2.4	-84.22

	NODE	Mxx	Myy	Mxy	Mmax	Mmin	ANGLE
Max	Cent	-4.1	1.6	-0.3	1.6	-4.3	-84.74
	494	-5.0	1.3	-0.3	1.4	-5.1	-85.06
	495	-3.1	1.7	-0.4	1.8	-3.4	-83.38
	502	-3.2	2.0	-0.4	2.0	-3.3	-84.46
	501	-5.1	1.4	-0.3	1.4	-5.2	-85.89
Min	Cent	-5.9	-0.9	-0.9	-0.8	-5.9	-82.71
	494	-6.5	-1.0	-0.9	-0.9	-6.5	-83.38
	495	-5.2	-0.7	-1.0	-0.6	-5.3	-81.96
	502	-5.3	-0.8	-0.8	-0.7	-5.3	-81.95
	501	-6.7	-1.1	-0.8	-1.1	-6.7	-83.36

	NODE	Vxx	Vyy
Max	Cent	-1.7	0.3
	494	-1.7	0.3
	495	-1.7	0.2
	502	-1.7	0.2
	501	-1.7	0.3
Min	Cent	-3.3	-0.5
	494	-3.3	-0.3
	495	-3.3	-0.7
	502	-3.4	-0.7
	501	-3.4	-0.3

ELEM	MAT	SEC	LC		NODE	Fxx	Fyy	Fxy	Fmax	Fmin	ANGLE
458	1	1	SX (RS)		Cent	2.3	0.6	0.4	2.4	0.5	12.13
					495	2.1	0.4	0.4	2.2	0.3	12.06
					496	2.1	0.8	0.4	2.2	0.7	15.08
					503	2.5	0.8	0.4	2.6	0.7	12.23
					502	2.5	0.4	0.4	2.6	0.3	10.12

	NODE	Mxx	Myy	Mxy	Mmax	Mmin	ANGLE

	Cent	4.0	1.8	0.6	4.1	1.7	13.79
	495	3.3	1.3	0.6	3.4	1.1	15.90
	496	4.7	2.1	0.7	4.9	2.0	14.04
	503	4.6	2.3	0.5	4.7	2.2	11.99
	502	3.2	1.5	0.4	3.3	1.4	13.84

NODE	Vxx	Vyy
Cent	2.3	0.5
495	2.4	0.6
496	2.4	0.4
503	2.3	0.4
502	2.3	0.6

LC	NODE	Fxx	Fyy	Fxy	Fmax	Fmin	ANGLE
SY (RS)	Cent	0.8	0.2	1.7	2.2	-1.2	40.14
	495	0.8	0.2	1.7	2.2	-1.2	39.59
	496	0.8	0.4	1.7	2.3	-1.1	41.64
	503	0.8	0.4	1.7	2.3	-1.1	41.50
	502	0.8	0.2	1.7	2.2	-1.2	39.45

NODE	Mxx	Myy	Mxy	Mmax	Mmin	ANGLE
Cent	0.5	0.9	0.7	1.4	-0.0	53.26
495	0.6	1.2	0.6	1.6	0.3	58.41
496	0.8	0.9	0.7	1.5	0.1	47.01
503	0.5	0.4	0.9	1.3	-0.4	42.29
502	0.3	1.4	0.7	1.7	-0.0	62.68

NODE	Vxx	Vyy
Cent	0.4	0.3
495	0.5	0.5
496	0.5	1.0
503	0.4	1.0
502	0.4	0.5

LC		NODE	Fxx	Fyy	Fxy	Fmax	Fmin	ANGLE
RC ENV~1	Max	Cent	1.1	2.0	1.4	2.1	1.0	-83.73
		495	1.0	1.8	1.4	1.9	0.9	-83.14
		496	1.0	2.2	1.4	2.3	1.0	-83.58
		503	1.1	2.2	1.4	2.3	1.1	-84.22
		502	1.1	1.8	1.4	1.9	1.0	-83.87
	Min	Cent	-3.9	0.3	-1.9	0.4	-3.9	-80.95
		495	-3.5	0.4	-1.9	0.5	-3.6	-80.61
		496	-3.5	0.1	-1.9	0.3	-3.6	-79.87
		503	-4.2	0.1	-1.9	0.2	-4.3	-81.26
		502	-4.2	0.4	-1.9	0.5	-4.3	-81.82

NODE	Mxx	Myy	Mxy	Mmax	Mmin	ANGLE
Max Cent	1.6	4.0	-0.0	4.0	1.6	-86.54
495	-0.6	2.7	-0.2	2.7	-0.6	-87.09
496	4.1	4.8	-0.2	4.9	4.0	-76.48
503	3.9	5.4	0.3	5.4	3.9	-86.15
502	-0.9	3.1	0.2	3.1	-0.9	-88.95
Min Cent	-6.3	-0.9	-1.4	-0.7	-6.5	-78.64
495	-7.3	-1.6	-1.6	-1.4	-7.4	-80.02
496	-5.4	-0.1	-1.8	0.2	-5.8	-71.17
503	-5.4	-0.0	-1.5	0.1	-5.6	-76.66
502	-7.7	-1.8	-1.2	-1.8	-7.7	-83.09

NODE	Vxx	Vyy
Max Cent	-3.1	0.1
495	-3.0	0.4
496	-3.0	0.2
503	-3.2	0.2
502	-3.2	0.4
Min Cent	-10.3	-1.4
495	-10.2	-0.9
496	-10.2	-1.8
503	-10.5	-1.8
502	-10.5	-0.9

LC		NODE	Fxx	Fyy	Fxy	Fmax	Fmin	ANGLE
RC ENV~2	Max	Cent	-0.6	1.5	-0.1	1.5	-0.6	-83.72
		495	-0.5	1.4	-0.1	1.4	-0.5	-83.15
		496	-0.5	1.6	-0.1	1.7	-0.5	-83.57
		503	-0.6	1.6	-0.1	1.7	-0.6	-84.21
		502	-0.6	1.4	-0.1	1.4	-0.6	-83.87
	Min	Cent	-2.7	0.6	-0.5	0.6	-2.8	-83.54
		495	-2.5	0.6	-0.5	0.7	-2.6	-83.03
		496	-2.5	0.5	-0.5	0.6	-2.6	-82.96
		503	-3.0	0.5	-0.5	0.6	-3.0	-83.48
		502	-3.0	0.6	-0.5	0.7	-3.0	-83.65

	NODE	Mxx	Myy	Mxy	Mmax	Mmin	ANGLE
Max	Cent	-1.5	2.6	-0.5	2.7	-1.8	-80.29
	495	-3.4	1.7	-0.5	1.8	-3.7	-81.54
	496	0.6	3.3	-0.6	3.7	0.1	-71.89
	503	0.5	4.0	-0.4	4.1	0.3	-80.60
	502	-3.7	1.9	-0.3	1.9	-3.8	-85.04
Min	Cent	-3.8	-0.2	-1.0	-0.1	-3.9	-79.51
	495	-5.4	-0.7	-1.2	-0.6	-5.4	-80.57
	496	-2.2	0.4	-1.3	0.6	-2.3	-72.75
	503	-2.2	0.5	-0.9	0.6	-2.3	-78.15
	502	-5.7	-0.9	-0.8	-0.8	-5.7	-83.61

	NODE	Vxx	Vyy
Max	Cent	-4.7	-0.0
	495	-4.6	0.2
	496	-4.6	-0.2
	503	-4.8	-0.2
	502	-4.8	0.2
Min	Cent	-7.6	-1.0
	495	-7.5	-0.7
	496	-7.5	-1.3
	503	-7.7	-1.3
	502	-7.7	-0.7

ELEM	MAT	SEC	LC		NODE	Fxx	Fyy	Fxy	Fmax	Fmin	ANGLE
459	1	1	SX (RS)		Cent	3.4	1.1	0.7	3.6	0.9	15.06
					496	2.9	0.6	0.7	3.1	0.4	15.45
					497	2.9	1.6	0.7	3.2	1.3	23.19
					504	4.0	1.6	0.7	4.1	1.4	14.82
					503	4.0	0.6	0.7	4.1	0.5	11.00

	NODE	Mxx	Myy	Mxy	Mmax	Mmin	ANGLE
	Cent	5.7	2.4	0.8	5.9	2.3	12.21
	496	4.8	2.2	0.7	5.0	2.0	13.80
	497	6.4	0.7	0.8	6.5	0.6	7.60
	504	7.8	5.0	0.7	8.0	4.8	13.25
	503	3.9	2.2	0.6	4.1	2.0	18.15

	NODE	Vxx	Vyy
	Cent	4.8	4.4
	496	3.5	0.4
	497	3.5	8.3
	504	6.0	8.3
	503	6.0	0.4

LC		NODE	Fxx	Fyy	Fxy	Fmax	Fmin	ANGLE
SY (RS)		Cent	1.2	0.5	1.9	2.7	-1.1	40.13
		496	1.2	0.4	1.9	2.7	-1.1	39.02
		497	1.2	1.4	1.9	3.2	-0.5	46.67
		504	1.3	1.4	1.9	3.2	-0.5	46.28
		503	1.3	0.4	1.9	2.8	-1.1	38.65

	NODE	Mxx	Myy	Mxy	Mmax	Mmin	ANGLE
	Cent	0.8	1.5	0.8	2.1	0.2	55.82
	496	1.1	0.9	1.0	2.0	-0.0	42.26

		497	1.4	1.5	1.1	2.5	0.4	46.63
		504	1.7	6.1	0.5	6.1	1.6	83.11
		503	0.4	0.4	0.5	0.9	-0.1	44.17

	NODE	Vxx	Vyy
	Cent	1.7	6.2
	496	3.0	1.0
	497	3.0	13.2
	504	1.3	13.2
	503	1.3	1.0

LC		NODE	Fxx	Fyy	Fxy	Fmax	Fmin	ANGLE
RC ENV~1	Max	Cent	1.7	2.4	1.5	2.6	1.6	-81.51
		496	1.4	1.9	1.5	2.2	1.2	58.40
		497	1.4	3.0	1.5	3.2	1.4	66.68
		504	2.0	3.0	1.5	3.2	1.9	68.83
		503	2.0	1.9	1.5	2.1	1.4	22.79
	Min	Cent	-5.4	-0.1	-2.3	0.1	-5.6	-78.45
		496	-4.6	0.3	-2.3	0.5	-4.8	-77.40
		497	-4.6	-0.4	-2.3	-0.2	-4.8	-75.52
		504	-6.3	-0.4	-2.3	-0.2	-6.4	-79.29
		503	-6.3	0.3	-2.3	0.4	-6.5	-80.39

		NODE	Mxx	Myy	Mxy	Mmax	Mmin	ANGLE
	Max	Cent	7.5	7.1	-0.2	8.3	6.3	-58.07
		496	3.9	4.8	-0.1	5.0	3.8	-68.58
		497	11.2	5.5	-0.3	12.1	5.1	-22.23
		504	12.8	13.8	-0.2	14.8	11.6	-59.64
		503	2.2	5.1	-0.0	5.1	2.2	-89.65
	Min	Cent	-4.0	1.5	-2.1	2.1	-4.5	-73.26
		496	-5.7	-0.2	-2.1	0.3	-6.2	-69.03
		497	-1.6	1.9	-2.7	3.9	-2.5	-68.50
		504	-2.9	0.6	-1.8	2.2	-3.4	-71.98
		503	-5.7	-0.3	-1.3	-0.2	-5.9	-82.03

		NODE	Vxx	Vyy
	Max	Cent	-5.5	3.0
		496	-6.3	0.2
		497	-6.3	7.7
		504	-4.6	7.7
		503	-4.6	0.2
	Min	Cent	-21.0	-9.3
		496	-19.5	-1.8
		497	-19.5	-18.7
		504	-22.4	-18.7
		503	-22.4	-1.8

LC		NODE	Fxx	Fyy	Fxy	Fmax	Fmin	ANGLE
RC ENV~2	Max	Cent	-0.4	1.8	-0.1	1.9	-0.4	-81.54
		496	-0.4	1.4	-0.1	1.6	-0.4	-79.90
		497	-0.4	2.1	-0.1	2.3	-0.4	-81.21
		504	-0.5	2.1	-0.1	2.3	-0.5	-82.73
		503	-0.5	1.4	-0.1	1.5	-0.5	-81.85
	Min	Cent	-3.8	0.5	-0.9	0.5	-4.0	-84.28
		496	-3.2	0.6	-0.9	0.6	-3.4	-84.78
		497	-3.2	0.3	-0.9	0.3	-3.4	-83.19
		504	-4.4	0.3	-0.9	0.3	-4.6	-83.68
		503	-4.4	0.6	-0.9	0.6	-4.6	-85.08

		NODE	Mxx	Myy	Mxy	Mmax	Mmin	ANGLE
	Max	Cent	3.9	5.3	-0.7	6.2	2.8	-59.95
		496	0.3	3.3	-0.8	3.8	-0.4	-69.64
		497	8.0	4.2	-1.0	8.8	3.4	-23.45
		504	8.6	10.2	-0.6	10.9	7.9	-61.13
		503	-1.0	3.6	-0.3	3.7	-1.2	-82.22
	Min	Cent	-0.0	1.6	-1.5	2.1	-0.2	-59.96
		496	-2.5	0.3	-1.6	0.7	-2.6	-70.53
		497	2.8	1.8	-2.0	3.6	1.2	-38.87
		504	2.6	3.9	-1.3	4.1	2.4	-69.16
		503	-3.2	0.3	-0.9	0.4	-3.2	-82.24

		NODE	Vxx	Vyy
	Max	Cent	-8.9	-1.7
		496	-8.8	-0.2
		497	-8.8	-3.1
		504	-9.0	-3.1
		503	-9.0	-0.2
	Min	Cent	-15.3	-6.2
		496	-14.3	-1.3
		497	-14.3	-11.1
		504	-16.3	-11.1
		503	-16.3	-1.3

ELEM	MAT	SEC	LC		NODE	Fxx	Fyy	Fxy	Fmax	Fmin	ANGLE
460	1	1	SX (RS)		Cent	6.0	0.9	3.1	7.4	-0.5	25.33
					497	0.5	1.1	3.1	3.9	-2.3	48.09
					208	0.5	1.2	3.1	3.9	-2.3	48.20
					10	11.9	1.2	3.1	12.7	0.4	14.89
					504	11.9	1.1	3.1	12.7	0.3	14.87

		NODE	Mxx	Myy	Mxy	Mmax	Mmin	ANGLE
		Cent	12.3	3.2	2.6	13.0	2.5	14.95
		497	7.0	0.7	1.4	7.2	0.4	11.68
		208	4.3	1.2	8.1	10.9	-5.5	39.52
		10	38.7	7.9	7.6	40.5	6.1	13.17
		504	7.8	4.9	1.7	8.6	4.2	24.97

		NODE	Vxx	Vyy
		Cent	17.4	4.3
		497	19.6	8.3
		208	19.6	0.6
		10	54.4	0.6
		504	54.4	8.3

LC		NODE	Fxx	Fyy	Fxy	Fmax	Fmin	ANGLE
SY (RS)		Cent	1.8	4.9	4.3	7.9	-1.2	54.85
		497	0.6	1.5	4.3	5.3	-3.3	47.94
		208	0.6	11.3	4.3	12.8	-0.9	70.64
		10	3.7	11.3	4.3	13.2	1.8	65.74
		504	3.7	1.5	4.3	7.0	-1.8	37.70

		NODE	Mxx	Myy	Mxy	Mmax	Mmin	ANGLE
		Cent	2.6	4.9	2.0	6.0	1.5	60.16
		497	1.4	1.2	0.7	2.0	0.6	41.30
		208	3.1	3.1	1.6	4.6	1.5	44.67
		10	9.1	21.9	5.1	23.7	7.4	70.71
		504	1.7	6.0	5.2	9.5	-1.8	56.31

		NODE	Vxx	Vyy
		Cent	4.6	11.4
		497	7.2	13.2
		208	7.2	35.9
		10	12.0	35.9
		504	12.0	13.2

LC		NODE	Fxx	Fyy	Fxy	Fmax	Fmin	ANGLE
RC ENV~1	Max	Cent	3.3	5.7	3.0	6.8	0.5	68.72
		497	0.3	2.4	3.0	5.5	-0.6	-52.52
		208	0.3	11.8	3.0	12.5	-0.4	76.25
		10	6.8	11.8	3.0	12.5	1.1	77.87
		504	6.8	2.4	3.0	7.4	1.5	18.57
	Min	Cent	-9.0	-4.2	-5.6	0.7	-10.6	-79.13
		497	-0.8	-0.5	-5.6	0.5	-6.3	69.32
		208	-0.8	-10.7	-5.6	0.8	-13.3	-73.50
		10	-17.5	-10.7	-5.6	-4.1	-18.5	-40.15
		504	-17.5	-0.5	-5.6	0.5	-18.5	-81.98

		NODE	Mxx	Myy	Mxy	Mmax	Mmin	ANGLE

Max	Cent	26.1	13.0	2.0	26.1	13.0	-0.12
	497	13.1	5.9	-1.0	15.7	4.5	-27.25
	208	9.7	3.8	10.0	16.6	2.0	34.41
	10	79.4	38.3	9.8	80.9	34.0	10.27
	504	10.2	12.7	3.1	15.2	10.1	-61.93
Min	Cent	-1.1	1.9	-3.3	5.3	-2.8	-62.72
	497	-1.3	2.1	-5.0	5.3	-3.4	-60.75
	208	1.1	-3.0	-6.1	2.4	-7.0	4.86
	10	-7.3	-5.5	-5.4	10.1	-8.9	-72.79
	504	-5.3	0.1	-7.3	2.9	-7.0	-65.44

	NODE	Vxx	Vyy
Max	Cent	-7.1	-1.3
	497	18.8	7.7
	208	18.8	16.0
	10	6.1	16.0
	504	6.1	7.7
Min	Cent	-56.1	-29.7
	497	-20.3	-18.7
	208	-20.3	-55.9
	10	-122.7	-55.9
	504	-122.7	-18.7

LC		NODE	Fxx	Fyy	Fxy	Fmax	Fmin	ANGLE
RC ENV~2	Max	Cent	-0.3	1.2	0.1	2.3	-0.3	-70.20
		497	-0.1	1.6	0.1	3.9	-0.4	-52.84
		208	-0.1	0.8	0.1	3.3	-0.4	-48.66
		10	-0.2	0.8	0.1	1.4	-0.2	-77.24
		504	-0.2	1.6	0.1	2.3	-0.2	-77.99
	Min	Cent	-6.4	0.5	-3.1	0.5	-7.5	83.98
		497	-0.5	0.4	-3.1	0.4	-2.6	84.00
		208	-0.5	0.5	-3.1	0.6	-3.0	85.29
		10	-12.4	0.5	-3.1	0.6	-13.1	83.96
		504	-12.4	0.4	-3.1	0.4	-13.0	81.70

	NODE	Mxx	Myy	Mxy	Mmax	Mmin	ANGLE
Max	Cent	18.9	9.7	-0.1	18.9	9.7	-0.62
	497	9.5	4.5	-1.7	11.4	2.6	-28.07
	208	6.5	0.8	5.5	7.9	0.3	31.44
	10	57.0	25.9	5.8	58.0	24.8	10.19
	504	4.9	9.4	-1.4	11.2	3.0	-62.50
Min	Cent	7.6	4.5	-1.1	8.0	4.1	-17.55
	497	3.5	2.0	-3.7	4.8	0.9	-36.62
	208	4.5	-1.8	0.0	6.0	-4.5	16.72
	10	20.4	12.4	0.3	20.4	12.4	2.43
	504	0.2	3.4	-3.4	3.9	-0.4	-69.51

	NODE	Vxx	Vyy
Max	Cent	-19.7	-11.1
	497	6.8	-3.1
	208	6.8	-19.1
	10	-33.0	-19.1
	504	-33.0	-3.1
Min	Cent	-40.6	-21.4
	497	-6.3	-11.1
	208	-6.3	-31.7
	10	-88.0	-31.7
	504	-88.0	-11.1

ELEM	MAT	SEC	LC		NODE	Fxx	Fyy	Fxy	Fmax	Fmin	ANGLE
461	1	1	SX (RS)		Cent	3.4	1.1	0.8	3.7	0.9	16.54
					449	4.0	1.6	0.8	4.2	1.4	16.35
					450	4.0	0.7	0.8	4.1	0.5	12.36
					506	2.9	0.7	0.8	3.2	0.4	16.95
					505	2.9	1.6	0.8	3.3	1.3	24.44

	NODE	Mxx	Myy	Mxy	Mmax	Mmin	ANGLE
	Cent	5.8	2.4	0.7	5.9	2.3	10.68
	449	7.8	5.0	0.7	8.0	4.8	13.00
	450	3.9	2.2	0.6	4.1	2.0	16.58
	506	5.0	2.2	0.5	5.0	2.1	9.57

```
                    505        6.5        0.6        0.6        6.6        0.5       5.84

                   NODE        Vxx        Vyy
             ---- ------ ---------- ----------
                   Cent        4.7        4.3
                    449        6.0        8.2
                    450        6.0        0.3
                    506        3.5        0.3
                    505        3.5        8.2

        LC         NODE        Fxx        Fyy        Fxy       Fmax       Fmin      ANGLE
-------- ---- ------ ---------- ---------- ---------- ---------- ---------- ----------
      SY (RS)   Cent        1.1        0.5        2.1        3.0       -1.3      40.94
                 449        1.3        1.4        2.1        3.4       -0.8      45.91
                 450        1.3        0.4        2.1        3.0       -1.4      39.00
                 506        1.2        0.4        2.1        2.9       -1.4      39.58
                 505        1.2        1.4        2.1        3.4       -0.8      46.51

                   NODE        Mxx        Myy        Mxy       Mmax       Mmin      ANGLE
             ---- ------ ---------- ---------- ---------- ---------- ---------- ----------
                   Cent        0.8        1.1        0.7        1.7        0.2      51.79
                    449        1.4        3.4        0.4        3.4        1.4      79.11
                    450        0.5        2.4        0.4        2.4        0.5      78.61
                    506        0.9        1.6        0.9        2.2        0.3      55.83
                    505        1.8        3.9        0.9        4.2        1.4      69.77

                   NODE        Vxx        Vyy
             ---- ------ ---------- ----------
                   Cent        1.9        5.9
                    449        1.3       13.0
                    450        1.3        1.1
                    506        3.1        1.1
                    505        3.1       13.0

        LC         NODE        Fxx        Fyy        Fxy       Fmax       Fmin      ANGLE
-------- ---- ------ ---------- ---------- ---------- ---------- ---------- ----------
RC ENV~1  Max   Cent        1.7        2.8        1.9        2.9        1.4     -83.61
                 449        2.0        3.6        1.9        3.7        1.8     -84.14
                 450        2.0        2.0        1.9        2.3        1.2      30.98
                 506        1.4        2.0        1.9        2.4        0.9      56.20
                 505        1.4        3.6        1.9        3.7        1.2     -83.07
           Min   Cent       -6.9       -0.1       -2.4        0.1       -7.0     -79.23
                 449       -7.8       -0.4       -2.4       -0.2       -7.9     -79.97
                 450       -7.8        0.1       -2.4        0.3       -7.9     -80.83
                 506       -6.0        0.1       -2.4        0.3       -6.1     -78.28
                 505       -6.0       -0.4       -2.4       -0.2       -6.1     -76.89

                   NODE        Mxx        Myy        Mxy       Mmax       Mmin      ANGLE
             ---- ------ ---------- ---------- ---------- ---------- ---------- ----------
           Max   Cent        7.5       10.8       -0.1       12.2        7.3     -65.74
                    449       13.1       17.7       -0.0       18.9       12.6     -66.47
                    450        2.0        8.6        0.2        8.9        2.0     -80.31
                    506        3.9        7.7        0.1        8.7        3.8     -71.28
                    505       12.3        9.2       -0.3       14.6        6.6     -35.21
           Min   Cent       -4.1        2.6       -3.2        2.9       -4.4     -78.19
                    449       -3.0        2.7       -2.9        3.0       -3.3     -76.82
                    450       -5.8        1.7       -2.2        1.8       -5.9     -79.85
                    506       -6.0        1.4       -3.2        1.6       -6.2     -80.30
                    505       -1.7        0.9       -3.9        4.3       -2.2     -31.40

                   NODE        Vxx        Vyy
             ---- ------ ---------- ----------
           Max   Cent       22.3        9.3
                    449       23.8       18.5
                    450       23.8        2.6
                    506       20.9        2.6
                    505       20.9       18.5
           Min   Cent        5.7       -2.6
                    449        4.7       -7.5
                    450        4.7        0.1
                    506        6.6        0.1
                    505        6.6       -7.5

        LC         NODE        Fxx        Fyy        Fxy       Fmax       Fmin      ANGLE
-------- ---- ------ ---------- ---------- ---------- ---------- ---------- ----------
RC ENV~2  Max   Cent        0.6        2.0        0.2        2.1        0.2     -83.69
```

		449	0.8	2.6	0.2	2.6	0.1	-84.22
		450	0.8	1.5	0.2	1.5	0.4	-83.73
		506	0.4	1.5	0.2	1.6	0.2	-82.49
		505	0.4	2.6	0.2	2.7	0.1	-83.17
	Min	Cent	-4.8	0.3	-0.8	0.6	-4.9	88.76
		449	-5.4	0.2	-0.8	0.6	-5.5	79.70
		450	-5.4	0.5	-0.8	0.6	-5.5	88.72
		506	-4.2	0.5	-0.8	0.6	-4.3	88.80
		505	-4.2	0.2	-0.8	0.6	-4.3	29.86

	NODE	Mxx	Myy	Mxy	Mmax	Mmin	ANGLE
Max	Cent	4.4	7.9	-0.8	8.7	3.5	-66.96
	449	9.3	12.8	-0.7	13.6	8.6	-67.53
	450	-1.0	6.3	-0.4	6.5	-1.1	-81.14
	506	0.5	5.6	-0.8	6.3	-0.1	-72.40
	505	8.8	6.8	-1.1	10.4	4.9	-35.49
Min	Cent	-0.8	3.7	-2.2	3.9	-1.0	-77.07
	449	1.5	5.2	-2.0	5.4	1.2	-75.97
	450	-3.7	2.9	-1.5	3.0	-3.8	-83.40
	506	-3.1	2.4	-2.2	2.6	-3.4	-78.35
	505	2.0	4.4	-2.7	5.0	1.3	-64.91

	NODE	Vxx	Vyy
Max	Cent	16.2	6.7
	449	17.2	11.4
	450	17.2	1.9
	506	15.2	1.9
	505	15.2	11.4
Min	Cent	8.3	1.4
	449	8.0	1.8
	450	8.0	1.1
	506	8.5	1.1
	505	8.5	1.8

ELEM	MAT	SEC	LC		NODE	Fxx	Fyy	Fxy	Fmax	Fmin	ANGLE
462	1	1	SX	(RS)	Cent	2.4	0.6	0.4	2.4	0.6	12.11
					450	2.5	0.9	0.4	2.6	0.8	12.53
					451	2.5	0.4	0.4	2.6	0.4	10.27
					507	2.2	0.4	0.4	2.3	0.4	11.74
					506	2.2	0.9	0.4	2.3	0.8	14.71

	NODE	Mxx	Myy	Mxy	Mmax	Mmin	ANGLE
	Cent	4.0	1.8	0.4	4.1	1.8	9.16
	450	4.6	2.3	0.4	4.7	2.2	9.72
	451	3.2	1.5	0.3	3.3	1.4	10.40
	507	3.4	1.3	0.3	3.5	1.3	9.05
	506	4.9	2.2	0.5	4.9	2.1	9.53

	NODE	Vxx	Vyy
	Cent	2.4	0.3
	450	2.3	0.3
	451	2.3	0.4
	507	2.4	0.4
	506	2.4	0.3

LC		NODE	Fxx	Fyy	Fxy	Fmax	Fmin	ANGLE
SY	(RS)	Cent	0.7	0.1	1.8	2.3	-1.4	40.38
		450	0.8	0.3	1.8	2.4	-1.3	41.36
		451	0.8	0.2	1.8	2.4	-1.4	40.39
		507	0.7	0.2	1.8	2.3	-1.4	41.24
		506	0.7	0.3	1.8	2.4	-1.3	42.22

	NODE	Mxx	Myy	Mxy	Mmax	Mmin	ANGLE
	Cent	0.4	1.6	0.6	1.9	0.2	67.50
	450	0.7	2.4	0.8	2.7	0.3	67.76
	451	0.3	1.2	0.7	1.6	-0.1	61.28
	507	0.4	1.3	0.4	1.5	0.2	69.09
	506	0.6	1.7	0.5	1.9	0.4	67.55

	NODE	Vxx	Vyy

		Cent	0.4	0.3
		450	0.4	1.1
		451	0.4	0.4
		507	0.4	0.4
		506	0.4	1.1

LC		NODE	Fxx	Fyy	Fxy	Fmax	Fmin	ANGLE
RC ENV~1	Max	Cent	1.0	2.2	1.8	2.2	0.9	-88.02
		450	1.2	2.4	1.8	2.4	1.0	-88.11
		451	1.2	2.1	1.8	2.2	0.9	56.88
		507	0.9	2.1	1.8	2.2	0.7	57.13
		506	0.9	2.4	1.8	2.4	0.8	-88.01
	Min	Cent	-4.9	0.2	-1.9	0.3	-4.9	-84.03
		450	-5.1	0.0	-1.9	0.1	-5.1	-84.02
		451	-5.1	0.4	-1.9	0.4	-5.1	-84.51
		507	-4.7	0.4	-1.9	0.4	-4.7	-84.03
		506	-4.7	0.0	-1.9	0.1	-4.7	-83.44

		NODE	Mxx	Myy	Mxy	Mmax	Mmin	ANGLE
	Max	Cent	1.5	6.7	0.2	7.1	1.5	-79.33
		450	3.7	9.1	0.5	9.4	3.7	-79.91
		451	-1.1	5.3	0.5	5.4	-1.1	-83.77
		507	-0.7	4.6	-0.1	5.0	-0.8	-79.13
		506	4.1	7.8	-0.1	8.6	4.1	-72.89
	Min	Cent	-6.6	1.4	-2.3	1.5	-6.6	-84.57
		450	-5.5	1.9	-2.0	2.0	-5.6	-84.67
		451	-8.3	1.2	-1.8	1.2	-8.5	-86.63
		507	-8.0	1.0	-2.5	1.1	-8.5	-84.47
		506	-5.6	1.5	-2.8	1.6	-5.8	-81.67

		NODE	Vxx	Vyy
	Max	Cent	11.2	2.1
		450	11.2	2.6
		451	11.2	1.6
		507	11.1	1.6
		506	11.1	2.6
	Min	Cent	3.2	0.6
		450	3.3	0.1
		451	3.3	0.3
		507	3.2	0.3
		506	3.2	0.1

LC		NODE	Fxx	Fyy	Fxy	Fmax	Fmin	ANGLE
RC ENV~2	Max	Cent	0.2	1.6	0.1	1.6	0.2	-88.11
		450	0.3	1.7	0.1	1.7	0.2	-88.19
		451	0.3	1.5	0.1	1.5	0.3	-88.12
		507	0.2	1.5	0.1	1.5	0.1	-88.01
		506	0.2	1.7	0.1	1.7	0.1	-88.09
	Min	Cent	-3.4	0.5	-0.2	0.5	-3.4	68.67
		450	-3.6	0.4	-0.2	0.5	-3.6	56.58
		451	-3.6	0.6	-0.2	0.6	-3.6	69.96
		507	-3.3	0.6	-0.2	0.6	-3.3	75.07
		506	-3.3	0.4	-0.2	0.4	-3.3	67.23

		NODE	Mxx	Myy	Mxy	Mmax	Mmin	ANGLE
	Max	Cent	-1.6	4.9	-0.4	5.1	-1.7	-80.33
		450	0.7	6.6	-0.3	6.8	0.5	-80.92
		451	-4.0	3.9	-0.2	4.0	-4.0	-84.53
		507	-3.7	3.4	-0.5	3.7	-3.9	-80.10
		506	0.9	5.7	-0.6	6.2	0.4	-74.15
	Min	Cent	-4.3	2.2	-1.5	2.3	-4.5	-82.51
		450	-2.7	3.0	-1.3	3.1	-2.8	-82.74
		451	-6.1	1.7	-1.2	1.8	-6.2	-84.59
		507	-5.9	1.4	-1.7	1.5	-6.1	-82.47
		506	-2.8	2.4	-1.9	2.6	-3.0	-79.71

		NODE	Vxx	Vyy
	Max	Cent	8.2	1.5
		450	8.2	1.9
		451	8.2	1.1

		507	8.1	1.1	
		506	8.1	1.9	
	Min	Cent	4.6	0.9	
		450	4.6	1.1	
		451	4.6	0.7	
		507	4.6	0.7	
		506	4.6	1.1	

ELEM	MAT	SEC	LC		NODE	Fxx	Fyy	Fxy	Fmax	Fmin	ANGLE
463	1	1	SX (RS)		Cent	1.9	0.4	0.4	2.0	0.3	13.69
					451	1.9	0.6	0.4	2.0	0.5	14.50
					452	1.9	0.3	0.4	2.0	0.2	12.22
					508	1.8	0.3	0.4	1.9	0.2	13.02
					507	1.8	0.6	0.4	1.9	0.5	15.60

	NODE	Mxx	Myy	Mxy	Mmax	Mmin	ANGLE
	Cent	3.0	1.2	0.2	3.0	1.2	5.72
	451	3.5	1.5	0.3	3.5	1.5	7.58
	452	2.4	1.1	0.2	2.5	1.1	7.99
	508	2.6	1.1	0.1	2.6	1.1	3.91
	507	3.5	1.4	0.2	3.6	1.3	5.00

	NODE	Vxx	Vyy
	Cent	2.1	0.2
	451	2.1	0.4
	452	2.1	0.1
	508	2.0	0.1
	507	2.0	0.4

LC		NODE	Fxx	Fyy	Fxy	Fmax	Fmin	ANGLE
SY (RS)		Cent	0.5	0.2	1.6	2.0	-1.3	42.55
		451	0.6	0.2	1.6	2.1	-1.2	42.00
		452	0.6	0.2	1.6	2.1	-1.3	41.75
		508	0.5	0.2	1.6	2.0	-1.3	42.94
		507	0.5	0.2	1.6	2.0	-1.3	43.20

	NODE	Mxx	Myy	Mxy	Mmax	Mmin	ANGLE
	Cent	0.3	1.3	0.5	1.5	0.1	69.50
	451	0.4	1.2	0.5	1.4	0.2	64.28
	452	0.3	1.5	0.5	1.7	0.1	70.82
	508	0.2	1.3	0.4	1.5	0.1	71.19
	507	0.4	1.4	0.4	1.5	0.2	69.17

	NODE	Vxx	Vyy
	Cent	0.3	0.1
	451	0.3	0.4
	452	0.3	0.3
	508	0.3	0.3
	507	0.3	0.4

LC		NODE	Fxx	Fyy	Fxy	Fmax	Fmin	ANGLE
RC ENV~1	Max	Cent	0.8	2.1	1.7	2.1	0.5	58.32
		451	0.8	2.3	1.7	2.3	0.6	89.97
		452	0.8	2.0	1.7	2.1	0.5	57.46
		508	0.7	2.0	1.7	2.1	0.4	58.49
		507	0.7	2.3	1.7	2.3	0.5	89.97
	Min	Cent	-3.9	0.5	-1.6	0.5	-3.9	-84.42
		451	-3.9	0.3	-1.6	0.4	-3.9	-84.30
		452	-3.9	0.6	-1.6	0.6	-3.9	-84.68
		508	-3.9	0.6	-1.6	0.6	-3.9	-84.53
		507	-3.9	0.3	-1.6	0.4	-3.9	-84.12

		NODE	Mxx	Myy	Mxy	Mmax	Mmin	ANGLE
	Max	Cent	-1.7	4.4	0.2	4.6	-1.7	-82.87
		451	-0.4	5.5	0.3	5.7	-0.4	-83.06
		452	-3.1	4.0	0.3	4.1	-3.1	-84.50
		508	-2.8	3.5	0.1	3.7	-2.9	-82.78
		507	-0.4	4.7	0.1	5.0	-0.4	-80.91

Min	Cent	-8.6	0.9	-1.9	1.0	-8.8	-83.31
	451	-7.7	1.2	-1.8	1.2	-7.9	-86.80
	452	-9.7	0.6	-1.8	0.7	-9.8	-84.08
	508	-9.5	0.5	-2.1	0.6	-9.8	-83.73
	507	-7.7	1.0	-2.2	1.0	-7.9	-86.52

	NODE	Vxx	Vyy
Max	Cent	5.3	1.3
	451	5.4	1.6
	452	5.4	1.1
	508	5.2	1.1
	507	5.2	1.6
Min	Cent	0.5	0.4
	451	0.5	0.3
	452	0.5	0.3
	508	0.5	0.3
	507	0.5	0.3

LC		NODE	Fxx	Fyy	Fxy	Fmax	Fmin	ANGLE
RC ENV~2	Max	Cent	-0.0	1.5	0.1	1.5	-0.0	89.89
		451	0.0	1.6	0.1	1.6	0.0	89.90
		452	0.0	1.4	0.1	1.4	0.0	89.89
		508	-0.1	1.4	0.1	1.4	-0.1	89.89
		507	-0.1	1.6	0.1	1.6	-0.1	89.89
	Min	Cent	-2.7	0.6	-0.0	0.6	-2.7	80.96
		451	-2.8	0.5	-0.0	0.5	-2.8	79.19
		452	-2.8	0.7	-0.0	0.7	-2.8	81.13
		508	-2.7	0.7	-0.0	0.7	-2.7	82.24
		507	-2.7	0.5	-0.0	0.5	-2.7	80.78

	NODE	Mxx	Myy	Mxy	Mmax	Mmin	ANGLE
Max	Cent	-4.4	3.3	-0.2	3.4	-4.5	-83.72
	451	-3.3	4.1	-0.2	4.1	-3.3	-83.89
	452	-5.4	3.0	-0.2	3.0	-5.4	-85.22
	508	-5.4	2.6	-0.3	2.7	-5.4	-83.64
	507	-3.2	3.5	-0.3	3.6	-3.4	-81.91
Min	Cent	-6.3	1.4	-1.3	1.5	-6.5	-83.98
	451	-5.7	1.8	-1.2	1.9	-5.7	-84.07
	452	-7.1	1.3	-1.2	1.4	-7.2	-82.31
	508	-7.0	0.8	-1.4	1.0	-7.2	-80.84
	507	-5.6	1.5	-1.4	1.6	-5.7	-83.11

	NODE	Vxx	Vyy
Max	Cent	3.9	1.0
	451	3.9	1.1
	452	3.9	0.8
	508	3.8	0.8
	507	3.8	1.1
Min	Cent	1.8	0.6
	451	1.8	0.7
	452	1.8	0.6
	508	1.8	0.6
	507	1.8	0.7

ELEM	MAT	SEC	LC		NODE	Fxx	Fyy	Fxy	Fmax	Fmin	ANGLE
464	1	1	SX	(RS)	Cent	1.7	0.2	0.5	1.8	0.1	16.21
					452	1.8	0.3	0.5	1.9	0.2	16.71
					453	1.8	0.2	0.5	1.9	0.1	15.41
					509	1.7	0.2	0.5	1.8	0.1	16.24
					508	1.7	0.3	0.5	1.8	0.2	17.67

	NODE	Mxx	Myy	Mxy	Mmax	Mmin	ANGLE
	Cent	2.3	1.1	0.1	2.3	1.1	3.43
	452	2.6	1.1	0.1	2.6	1.1	5.27
	453	2.1	1.3	0.1	2.1	1.3	8.03
	509	2.3	1.1	0.1	2.3	1.1	6.57
	508	2.7	1.1	0.1	2.7	1.1	2.09

	NODE	Vxx	Vyy
	Cent	2.2	0.3

	452	2.3	0.1	
	453	2.3	0.5	
	509	2.2	0.5	
	508	2.2	0.1	

LC		NODE	Fxx	Fyy	Fxy	Fmax	Fmin	ANGLE
SY (RS)		Cent	0.3	0.2	1.5	1.8	-1.2	44.01
		452	0.5	0.2	1.5	1.9	-1.2	42.97
		453	0.5	0.2	1.5	1.9	-1.2	42.86
		509	0.3	0.2	1.5	1.7	-1.3	44.86
		508	0.3	0.2	1.5	1.8	-1.3	44.97

		NODE	Mxx	Myy	Mxy	Mmax	Mmin	ANGLE
		Cent	0.2	1.4	0.5	1.6	0.0	69.23
		452	0.3	1.5	0.5	1.7	0.1	69.60
		453	0.2	1.3	0.6	1.5	-0.0	65.50
		509	0.1	1.7	0.5	1.9	-0.0	73.39
		508	0.5	1.3	0.4	1.5	0.3	66.72

		NODE	Vxx	Vyy
		Cent	0.3	0.5
		452	0.2	0.3
		453	0.2	1.2
		509	0.4	1.2
		508	0.4	0.3

LC		NODE	Fxx	Fyy	Fxy	Fmax	Fmin	ANGLE
RC ENV~1	Max	Cent	0.7	2.1	1.6	2.1	0.3	88.97
		452	0.8	2.1	1.6	2.1	0.4	88.97
		453	0.8	2.0	1.6	2.0	0.4	58.50
		509	0.6	2.0	1.6	2.0	0.3	88.97
		508	0.6	2.1	1.6	2.1	0.3	88.99
	Min	Cent	-3.3	0.6	-1.4	0.7	-3.3	-83.22
		452	-3.3	0.5	-1.4	0.6	-3.3	-83.05
		453	-3.3	0.6	-1.4	0.7	-3.3	-83.33
		509	-3.4	0.6	-1.4	0.7	-3.4	-83.26
		508	-3.4	0.5	-1.4	0.6	-3.4	-82.98

		NODE	Mxx	Myy	Mxy	Mmax	Mmin	ANGLE
	Max	Cent	-3.1	3.8	0.4	4.0	-3.1	-84.54
		452	-2.9	4.0	0.3	4.1	-2.9	-84.24
		453	-3.3	4.3	0.4	4.4	-3.3	-84.92
		509	-3.1	3.7	0.4	3.7	-3.1	-84.82
		508	-2.7	3.5	0.3	3.6	-2.7	-84.15
	Min	Cent	-9.0	0.6	-1.8	0.7	-9.3	-83.86
		452	-9.7	0.6	-1.8	0.7	-9.8	-83.69
		453	-8.7	1.0	-1.8	1.0	-9.0	-88.13
		509	-8.7	0.2	-1.7	0.3	-8.9	-83.72
		508	-9.4	0.5	-1.8	0.6	-9.6	-84.65

		NODE	Vxx	Vyy
	Max	Cent	2.2	1.3
		452	2.3	1.1
		453	2.3	1.9
		509	2.2	1.9
		508	2.2	1.1
	Min	Cent	-2.2	0.1
		452	-2.3	0.3
		453	-2.3	-0.4
		509	-2.2	-0.4
		508	-2.2	0.3

LC		NODE	Fxx	Fyy	Fxy	Fmax	Fmin	ANGLE
RC ENV~2	Max	Cent	-0.2	1.5	0.1	1.5	-0.2	88.90
		452	-0.2	1.5	0.1	1.5	-0.2	88.89
		453	-0.2	1.4	0.1	1.4	-0.2	88.87
		509	-0.3	1.4	0.1	1.4	-0.3	88.90
		508	-0.3	1.5	0.1	1.5	-0.3	88.93
	Min	Cent	-2.4	0.7	0.0	0.7	-2.4	84.43

452	-2.3	0.6	0.0	0.6	-2.3	83.87
453	-2.3	0.7	0.0	0.7	-2.3	84.57
509	-2.4	0.7	0.0	0.7	-2.4	84.90
508	-2.4	0.6	0.0	0.6	-2.4	84.28

	NODE	Mxx	Myy	Mxy	Mmax	Mmin	ANGLE
Max	Cent	-5.4	2.9	-0.1	2.9	-5.4	-85.32
	452	-5.3	3.0	-0.2	3.1	-5.4	-84.98
	453	-5.4	3.2	-0.1	3.2	-5.4	-85.64
	509	-5.4	2.7	-0.1	2.8	-5.4	-85.65
	508	-5.3	2.6	-0.2	2.7	-5.3	-84.99
Min	Cent	-6.7	1.1	-1.2	1.3	-6.9	-81.72
	452	-7.1	1.3	-1.2	1.4	-7.2	-84.41
	453	-6.5	1.4	-1.1	1.5	-6.6	-81.99
	509	-6.5	0.9	-1.1	1.0	-6.6	-81.45
	508	-7.0	0.9	-1.2	1.0	-7.0	-81.44

	NODE	Vxx	Vyy
Max	Cent	0.7	0.9
	452	0.7	0.8
	453	0.7	1.1
	509	0.7	1.1
	508	0.7	0.8
Min	Cent	-1.1	0.6
	452	-1.1	0.6
	453	-1.1	0.7
	509	-1.1	0.7
	508	-1.1	0.6

ELEM	MAT	SEC	LC	NODE	Fxx	Fyy	Fxy	Fmax	Fmin	ANGLE
465	1	1	SX (RS)	Cent	1.9	0.2	0.6	2.1	0.0	18.07
				453	2.0	0.2	0.6	2.2	0.0	17.19
				454	2.0	0.3	0.6	2.2	0.1	17.75
				510	1.8	0.3	0.6	2.0	0.1	19.81
				509	1.8	0.2	0.6	2.0	0.0	19.14

	NODE	Mxx	Myy	Mxy	Mmax	Mmin	ANGLE
	Cent	2.3	1.5	0.3	2.4	1.4	18.19
	453	2.0	1.2	0.2	2.0	1.2	10.42
	454	2.7	2.1	0.3	2.8	2.0	21.14
	510	3.0	1.9	0.5	3.2	1.7	21.52
	509	2.2	1.1	0.3	2.3	1.0	15.32

	NODE	Vxx	Vyy
	Cent	2.9	0.5
	453	2.8	0.5
	454	2.8	0.4
	510	2.9	0.4
	509	2.9	0.5

LC	NODE	Fxx	Fyy	Fxy	Fmax	Fmin	ANGLE
SY (RS)	Cent	0.2	0.4	1.4	1.7	-1.1	47.23
	453	0.3	0.3	1.4	1.7	-1.1	44.17
	454	0.3	0.7	1.4	1.9	-0.9	48.12
	510	0.2	0.7	1.4	1.9	-1.0	49.69
	509	0.2	0.3	1.4	1.7	-1.2	45.77

	NODE	Mxx	Myy	Mxy	Mmax	Mmin	ANGLE
	Cent	0.2	2.2	0.9	2.6	-0.1	68.69
	453	0.3	1.2	1.1	2.0	-0.5	56.30
	454	0.6	3.6	1.4	4.2	0.0	68.74
	510	0.4	2.5	0.8	2.8	0.1	72.16
	509	0.6	1.6	0.5	1.9	0.4	67.79

	NODE	Vxx	Vyy
	Cent	0.2	0.4
	453	0.3	1.2
	454	0.3	1.8
	510	0.1	1.8

		509	0.1	1.2

LC		NODE	Fxx	Fyy	Fxy	Fmax	Fmin	ANGLE
RC ENV~1	Max	Cent	0.9	2.0	1.5	2.1	0.3	62.00
		453	1.1	2.1	1.5	2.1	0.4	88.87
		454	1.1	2.0	1.5	2.3	0.4	62.27
		510	0.8	2.0	1.5	2.2	0.3	63.77
		509	0.8	2.1	1.5	2.1	0.2	88.92
	Min	Cent	-2.9	0.4	-1.4	0.7	-2.9	-81.28
		453	-2.9	0.6	-1.4	0.7	-3.0	-81.47
		454	-2.9	0.2	-1.4	0.6	-3.0	-81.26
		510	-3.1	0.2	-1.4	0.6	-3.1	-80.88
		509	-3.1	0.6	-1.4	0.7	-3.1	-81.10

		NODE	Mxx	Myy	Mxy	Mmax	Mmin	ANGLE
	Max	Cent	-2.5	4.9	0.9	4.9	-2.5	-86.27
		453	-3.7	4.1	0.9	4.2	-3.7	-84.94
		454	-1.2	7.1	1.3	7.3	-1.2	83.10
		510	-0.9	5.2	0.9	5.3	-1.0	84.08
		509	-3.3	3.6	0.6	3.6	-3.4	-86.88
	Min	Cent	-7.2	0.3	-1.5	0.5	-7.4	-80.31
		453	-9.4	1.0	-1.8	1.0	-9.5	-87.70
		454	-6.6	-0.1	-1.6	0.3	-6.6	-72.58
		510	-7.0	0.1	-1.3	0.2	-7.0	-82.20
		509	-8.8	0.2	-1.5	0.3	-9.0	-86.03

		NODE	Vxx	Vyy
	Max	Cent	0.1	2.4
		453	-0.0	1.9
		454	-0.0	3.4
		510	0.3	3.4
		509	0.3	1.9
	Min	Cent	-7.1	0.7
		453	-7.4	-0.4
		454	-7.4	-0.2
		510	-6.9	-0.2
		509	-6.9	-0.4

LC		NODE	Fxx	Fyy	Fxy	Fmax	Fmin	ANGLE
RC ENV~2	Max	Cent	-0.5	1.5	0.1	1.5	-0.5	88.81
		453	-0.4	1.5	0.1	1.5	-0.5	88.80
		454	-0.4	1.4	0.1	1.4	-0.5	88.77
		510	-0.5	1.4	0.1	1.4	-0.5	88.82
		509	-0.5	1.5	0.1	1.5	-0.5	88.85
	Min	Cent	-2.1	0.7	0.0	0.7	-2.1	85.53
		453	-2.0	0.7	0.0	0.7	-2.0	85.30
		454	-2.0	0.8	0.0	0.8	-2.0	85.62
		510	-2.2	0.8	0.0	0.8	-2.2	85.73
		509	-2.2	0.7	0.0	0.7	-2.2	85.43

		NODE	Mxx	Myy	Mxy	Mmax	Mmin	ANGLE
	Max	Cent	-4.8	3.7	0.0	3.7	-4.8	-87.01
		453	-5.7	3.1	-0.2	3.2	-5.7	-85.62
		454	-3.6	5.1	-0.1	5.1	-3.7	-85.79
		510	-3.5	3.8	0.2	3.8	-3.5	-88.53
		509	-5.5	2.7	0.1	2.7	-5.5	-87.62
	Min	Cent	-5.4	1.6	-1.0	1.7	-5.5	-82.25
		453	-7.0	1.3	-1.2	1.5	-7.1	-81.85
		454	-4.5	2.6	-1.0	2.7	-4.7	-82.31
		510	-4.6	1.6	-0.8	1.7	-4.7	-82.59
		509	-6.6	0.8	-0.9	1.0	-6.7	-82.86

		NODE	Vxx	Vyy
	Max	Cent	-2.3	1.7
		453	-2.4	1.1
		454	-2.4	2.4
		510	-2.1	2.4
		509	-2.1	1.1
	Min	Cent	-5.1	1.1
		453	-5.3	0.7
		454	-5.3	1.6

				510	-4.9	1.6			
				509	-4.9	0.7			

ELEM	MAT	SEC	LC		NODE	Fxx	Fyy	Fxy	Fmax	Fmin	ANGLE
466	1	1	SX	(RS)	Cent	2.6	0.5	1.0	3.1	0.1	22.07
					454	3.1	0.2	1.0	3.4	-0.1	17.45
					455	3.1	0.9	1.0	3.5	0.5	21.66
					511	2.2	0.9	1.0	2.8	0.4	29.58
					510	2.2	0.2	1.0	2.6	-0.3	22.93

		NODE	Mxx	Myy	Mxy	Mmax	Mmin	ANGLE
		Cent	4.1	2.2	0.7	4.3	2.0	19.56
		454	1.9	1.9	0.5	2.4	1.3	45.30
		455	6.6	5.6	0.7	7.0	5.2	27.20
		511	4.9	0.6	0.7	5.0	0.4	9.05
		510	3.2	2.0	0.5	3.4	1.8	20.06

		NODE	Vxx	Vyy
		Cent	6.2	5.7
		454	8.0	0.4
		455	8.0	11.0
		511	4.5	11.0
		510	4.5	0.4

LC		NODE	Fxx	Fyy	Fxy	Fmax	Fmin	ANGLE
SY	(RS)	Cent	0.2	0.6	1.4	1.9	-1.1	48.54
		454	0.4	0.7	1.4	2.0	-0.9	47.60
		455	0.4	1.7	1.4	2.6	-0.5	56.61
		511	0.8	1.7	1.4	2.8	-0.3	53.54
		510	0.8	0.7	1.4	2.2	-0.7	44.12

		NODE	Mxx	Myy	Mxy	Mmax	Mmin	ANGLE
		Cent	0.2	1.4	1.0	2.0	-0.4	59.80
		454	0.5	3.6	0.2	3.6	0.5	87.05
		455	1.5	7.1	0.1	7.1	1.5	89.05
		511	2.9	6.6	1.4	7.0	2.5	71.21
		510	1.3	2.3	1.5	3.4	0.3	54.98

		NODE	Vxx	Vyy
		Cent	3.2	11.3
		454	0.5	1.8
		455	0.5	24.4
		511	6.0	24.4
		510	6.0	1.8

LC		NODE	Fxx	Fyy	Fxy	Fmax	Fmin	ANGLE
RC ENV~1	Max	Cent	1.7	2.0	1.5	2.7	0.5	40.85
		454	2.3	2.0	1.5	2.9	0.4	30.20
		455	2.3	2.6	1.5	3.2	1.0	67.56
		511	1.2	2.6	1.5	3.3	0.4	66.35
		510	1.2	2.0	1.5	2.4	0.0	59.95
	Min	Cent	-3.6	0.3	-1.4	0.6	-3.8	-76.83
		454	-4.0	0.1	-1.4	0.9	-4.2	-78.69
		455	-4.0	-0.8	-1.4	0.2	-4.2	-76.95
		511	-3.1	-0.8	-1.4	0.2	-3.4	-54.89
		510	-3.1	0.1	-1.4	0.9	-3.4	-62.24

		NODE	Mxx	Myy	Mxy	Mmax	Mmin	ANGLE
	Max	Cent	1.5	8.4	1.4	8.4	1.3	88.43
		454	-3.0	6.9	0.4	6.9	-3.0	89.86
		455	5.8	13.2	1.0	13.2	5.6	89.83
		511	4.8	11.2	2.3	11.8	4.1	75.64
		510	-1.1	5.0	2.0	5.4	-1.3	76.93
	Min	Cent	-6.6	1.9	-0.9	2.0	-6.6	-87.58
		454	-7.3	-0.3	-1.6	-0.3	-7.5	-86.67
		455	-7.5	-0.9	-1.0	-0.9	-7.5	83.15
		511	-5.0	-1.9	-0.5	-1.7	-5.0	-68.90
		510	-7.5	0.2	-1.0	0.4	-7.5	-80.88

	NODE	Vxx	Vyy
Max	Cent	-0.3	13.7
	454	1.7	3.4
	455	1.7	27.6
	511	-0.8	27.6
	510	-0.8	3.4
Min	Cent	-15.7	-9.0
	454	-15.4	-0.2
	455	-15.4	-21.2
	511	-16.1	-21.2
	510	-16.1	-0.2

LC		NODE	Fxx	Fyy	Fxy	Fmax	Fmin	ANGLE
RC ENV~2	Max	Cent	-0.8	1.5	0.2	1.5	-0.8	89.57
		454	-0.8	1.5	0.2	1.5	-0.8	89.55
		455	-0.8	1.5	0.2	1.5	-0.8	87.47
		511	-0.7	1.5	0.2	1.5	-0.7	87.53
		510	-0.7	1.5	0.2	1.5	-0.8	89.59
	Min	Cent	-1.8	0.8	-0.0	0.8	-1.8	86.35
		454	-1.7	0.7	-0.0	0.7	-1.7	84.39
		455	-1.7	0.8	-0.0	0.8	-1.7	-88.62
		511	-2.0	0.8	-0.0	0.8	-2.0	-88.81
		510	-2.0	0.7	-0.0	0.7	-2.0	84.15

	NODE	Mxx	Myy	Mxy	Mmax	Mmin	ANGLE
Max	Cent	-1.2	6.2	0.5	6.2	-1.2	87.84
	454	-4.9	4.7	-0.1	4.8	-4.9	-86.68
	455	1.8	9.7	0.3	9.7	1.8	89.26
	511	3.0	7.2	1.1	7.5	2.7	77.73
	510	-4.1	3.7	0.6	3.7	-4.1	87.06
Min	Cent	-3.1	3.2	-0.5	3.2	-3.1	-85.57
	454	-5.5	2.4	-1.0	2.6	-5.6	-82.75
	455	-1.7	5.0	-0.6	5.0	-1.7	-85.08
	511	-0.6	3.3	0.0	3.3	-0.6	89.22
	510	-4.9	1.5	-0.4	1.5	-4.9	-86.43

	NODE	Vxx	Vyy
Max	Cent	-6.0	4.2
	454	-5.4	2.4
	455	-5.4	6.1
	511	-6.7	6.1
	510	-6.7	2.4
Min	Cent	-11.3	1.7
	454	-11.0	1.6
	455	-11.0	1.7
	511	-11.6	1.7
	510	-11.6	1.6

ELEM	MAT	SEC	LC		NODE	Fxx	Fyy	Fxy	Fmax	Fmin	ANGLE
467	1	1	SX (RS)		Cent	4.8	0.2	3.4	6.6	-1.6	28.01
					455	10.6	0.5	3.4	11.7	-0.5	16.94
					9	10.6	1.0	3.4	11.7	-0.1	17.55
					512	1.0	1.0	3.4	4.4	-2.4	44.74
					511	1.0	0.5	3.4	4.2	-2.6	42.83

	NODE	Mxx	Myy	Mxy	Mmax	Mmin	ANGLE
	Cent	12.7	3.2	3.0	13.6	2.3	16.40
	455	6.5	5.5	2.4	8.4	3.6	39.14
	9	47.6	9.5	9.7	49.9	7.2	13.53
	512	9.1	1.8	10.3	16.3	-5.4	35.27
	511	5.6	0.4	1.8	6.2	-0.1	17.45

	NODE	Vxx	Vyy
	Cent	23.2	5.5
	455	72.2	11.0
	9	72.2	0.0
	512	25.8	0.0
	511	25.8	11.0

LC		NODE	Fxx	Fyy	Fxy	Fmax	Fmin	ANGLE
SY (RS)		Cent	0.1	6.6	4.4	8.8	-2.1	63.21
		455	1.0	1.7	4.4	5.7	-3.0	47.29
		9	1.0	14.8	4.4	16.0	-0.3	73.86
		512	0.8	14.8	4.4	16.0	-0.4	74.02
		511	0.8	1.7	4.4	5.6	-3.1	47.87

		NODE	Mxx	Myy	Mxy	Mmax	Mmin	ANGLE
		Cent	3.6	13.7	3.1	14.6	2.7	74.33
		455	1.8	7.1	9.3	14.1	-5.2	53.00
		9	10.3	47.0	8.7	49.0	8.3	77.27
		512	6.4	9.0	1.7	9.8	5.6	64.23
		511	0.6	5.9	1.1	6.1	0.4	78.12

		NODE	Vxx	Vyy
		Cent	6.8	23.5
		455	2.2	24.4
		9	2.2	71.5
		512	11.4	71.5
		511	11.4	24.4

LC		NODE	Fxx	Fyy	Fxy	Fmax	Fmin	ANGLE
RC ENV~1	Max	Cent	3.9	7.2	4.5	9.2	-0.8	65.91
		455	9.7	2.6	4.5	11.0	0.4	20.14
		9	9.7	15.2	4.5	16.5	0.2	74.68
		512	0.1	15.2	4.5	16.5	-1.0	74.85
		511	0.1	2.6	4.5	5.9	-0.8	53.42
	Min	Cent	-5.7	-5.9	-4.2	0.8	-8.3	85.10
		455	-11.5	-0.8	-4.2	1.1	-12.4	85.81
		9	-11.5	-14.3	-4.2	-0.6	-15.6	-17.11
		512	-3.0	-14.3	-4.2	-0.5	-15.6	-16.95
		511	-3.0	-0.8	-4.2	1.1	-5.5	85.88

		NODE	Mxx	Myy	Mxy	Mmax	Mmin	ANGLE
	Max	Cent	16.3	21.0	4.7	22.5	11.8	72.72
		455	2.0	12.5	10.3	17.7	0.8	63.26
		9	63.2	66.7	10.1	68.6	42.6	77.99
		512	12.0	8.4	11.5	19.1	5.9	32.61
		511	6.8	10.7	3.9	12.3	4.1	60.83
	Min	Cent	-9.0	-6.4	-1.4	0.4	-9.1	-11.85
		455	-11.1	-1.7	-8.2	0.0	-12.6	-83.36
		9	-32.0	-27.4	-9.4	7.4	-34.0	-13.60
		512	-6.3	-9.6	-9.1	-3.6	-13.6	-4.30
		511	-4.7	-1.0	0.1	0.7	-4.7	24.96

		NODE	Vxx	Vyy
	Max	Cent	5.1	42.1
		455	41.2	27.6
		9	41.2	105.4
		512	20.6	105.4
		511	20.6	27.6
	Min	Cent	-43.2	-5.0
		455	-103.2	-21.2
		9	-103.2	-37.5
		512	-31.0	-37.5
		511	-31.0	-21.2

LC		NODE	Fxx	Fyy	Fxy	Fmax	Fmin	ANGLE
RC ENV~2	Max	Cent	-0.6	1.2	0.6	1.2	-0.6	-87.92
		455	0.4	1.5	0.6	1.5	0.2	83.27
		9	0.4	0.9	0.6	0.9	0.1	-86.89
		512	-0.3	0.9	0.6	0.9	-0.7	-88.12
		511	-0.3	1.5	0.6	1.6	-0.6	80.92
	Min	Cent	-1.9	0.5	-0.3	0.6	-2.0	85.17
		455	-2.6	0.8	-0.3	0.9	-2.7	85.85
		9	-2.6	0.2	-0.3	0.3	-2.7	78.21
		512	-2.1	0.2	-0.3	0.4	-2.1	84.24
		511	-2.1	0.8	-0.3	0.9	-2.1	85.92

	NODE	Mxx	Myy	Mxy	Mmax	Mmin	ANGLE
Max	Cent	9.6	11.3	2.9	12.7	8.3	60.84
	455	-3.8	8.5	1.6	8.7	-3.9	82.80
	9	32.0	31.3	1.9	32.4	30.9	-31.88
	512	8.3	-0.5	3.2	9.1	-0.9	15.49
	511	4.7	7.6	2.9	9.0	2.7	61.70
Min	Cent	2.3	6.5	0.6	6.9	1.5	69.02
	455	-5.8	4.2	0.2	4.2	-5.8	88.80
	9	9.5	19.3	-1.9	19.6	9.2	82.63
	512	1.2	-2.8	-1.1	1.5	-2.9	-16.98
	511	0.5	3.6	1.2	4.2	0.1	63.47

	NODE	Vxx	Vyy
Max	Cent	-16.0	29.7
	455	-22.0	6.1
	9	-22.0	55.0
	512	-1.2	55.0
	511	-1.2	6.1
Min	Cent	-31.1	18.5
	455	-56.5	1.7
	9	-56.5	33.7
	512	-11.3	33.7
	511	-11.3	1.7

ELEM	MAT	SEC	LC	NODE	Fxx	Fyy	Fxy	Fmax	Fmin	ANGLE
468	1	1	SX (RS)	Cent	0.8	1.1	1.0	2.0	-0.0	49.63
				158	0.5	1.4	1.0	2.0	-0.1	56.59
				505	0.5	1.0	1.0	1.8	-0.2	52.06
				513	1.3	1.0	1.0	2.2	0.1	41.58
				161	1.3	1.4	1.0	2.3	0.3	46.62

NODE	Mxx	Myy	Mxy	Mmax	Mmin	ANGLE
Cent	3.0	1.1	0.9	3.3	0.7	21.77
158	4.1	1.0	0.4	4.2	0.9	6.54
505	7.6	3.2	1.2	7.9	2.9	14.26
513	4.1	0.5	1.2	4.5	0.1	17.03
161	4.2	1.4	0.3	4.2	1.3	5.76

NODE	Vxx	Vyy
Cent	10.0	2.4
158	19.6	0.3
505	19.6	5.0
513	0.4	5.0
161	0.4	0.3

LC	NODE	Fxx	Fyy	Fxy	Fmax	Fmin	ANGLE
SY (RS)	Cent	0.7	2.5	2.2	4.0	-0.7	56.03
	158	1.1	3.5	2.2	4.8	-0.2	59.07
	505	1.1	1.6	2.2	3.6	-0.9	48.11
	513	0.5	1.6	2.2	3.3	-1.2	51.97
	161	0.5	3.5	2.2	4.6	-0.7	61.99

NODE	Mxx	Myy	Mxy	Mmax	Mmin	ANGLE
Cent	1.2	3.0	0.9	3.4	0.8	68.57
158	3.6	5.2	0.7	5.4	3.3	70.75
505	1.3	3.3	0.9	3.6	1.0	69.81
513	0.9	2.2	0.9	2.7	0.4	62.65
161	1.1	1.6	0.7	2.1	0.6	53.71

NODE	Vxx	Vyy
Cent	3.9	4.4
158	7.4	6.1
505	7.4	2.9
513	0.6	2.9
161	0.6	6.1

LC	NODE	Fxx	Fyy	Fxy	Fmax	Fmin	ANGLE

```
RC ENV~1  Max   Cent        0.3        2.9        1.8        3.8        0.1      63.19
                 158        0.9        3.9        1.8        4.7        0.1      65.12
                 505        0.9        1.9        1.8        3.2        0.0      52.97
                 513        0.5        1.9        1.8        2.9        0.2      60.33
                 161        0.5        3.9        1.8        4.6        0.3      69.54
          Min   Cent       -1.7       -2.2       -2.6        0.4       -4.4      86.72
                 158       -1.4       -3.0       -2.6        0.2       -5.0      85.34
                 505       -1.4       -1.3       -2.6        0.5       -3.9      87.57
                 513       -2.6       -1.3       -2.6        0.2       -3.9     -57.10
                 161       -2.6       -3.0       -2.6        0.0       -4.9     -55.18

                NODE        Mxx        Myy        Mxy       Mmax       Mmin      ANGLE
          ---- ------ ---------- ---------- ---------- ---------- ---------- ----------
          Max   Cent       10.5        6.3        0.5       10.9        6.0     -16.17
                 158       10.3        9.5       -0.0       11.2        9.5     -30.09
                 505       14.5       11.8        0.6       15.3       10.8     -27.74
                 513        7.5        3.6        0.9        7.7        3.2      -8.23
                 161       13.7        3.5        0.3       13.9        3.4      -8.15
          Min   Cent        2.6        0.2       -2.5        3.7       -0.2     -40.79
                 158        1.9       -0.9       -2.7        2.9       -1.3     -18.98
                 505       -2.0        2.1       -3.0        2.9       -2.7     -69.32
                 513       -0.9       -0.8       -2.6        1.8       -1.8     -59.62
                 161        3.1        0.4       -2.2        3.3        0.2     -13.84

                NODE        Vxx        Vyy
          ---- ------ ---------- ----------
          Max   Cent       14.1       14.3
                 158       20.7       11.3
                 505       20.7       17.4
                 513       11.0       17.4
                 161       11.0       11.3
          Min   Cent       -5.9        1.5
                 158      -18.6       -1.0
                 505      -18.6        1.7
                 513        6.5        1.7
                 161        6.5       -1.0

      LC        NODE        Fxx        Fyy        Fxy       Fmax       Fmin      ANGLE
-------- ---- ------ ---------- ---------- ---------- ---------- ---------- ----------
RC ENV~2  Max   Cent       -0.0        0.5        0.2        1.1       -0.2     -60.83
                 158       -0.2        0.8        0.2        1.6       -0.2     -57.68
                 505       -0.2        0.6        0.2        1.1       -0.2     -50.08
                 513        0.1        0.6        0.2        0.7       -0.0     -65.58
                 161        0.1        0.8        0.2        1.3       -0.1     -68.25
          Min   Cent       -1.2        0.3       -1.2        0.3       -1.8     -86.37
                 158       -0.5        0.1       -1.2        0.2       -1.2     -85.02
                 505       -0.5        0.0       -1.2        0.4       -1.5     -86.94
                 513       -1.9        0.0       -1.2        0.4       -2.5     -87.14
                 161       -1.9        0.1       -1.2        0.2       -2.4     -85.53

                NODE        Mxx        Myy        Mxy       Mmax       Mmin      ANGLE
          ---- ------ ---------- ---------- ---------- ---------- ---------- ----------
          Max   Cent        7.8        4.2       -0.4        8.0        4.0     -15.01
                 158        7.6        5.3       -0.6        8.2        4.2     -29.04
                 505       10.4        8.6       -0.6       10.9        7.9     -27.65
                 513        5.5        1.4       -0.3        5.5        1.3      -7.62
                 161       10.1        2.2       -0.4       10.2        2.0      -7.44
          Min   Cent        4.2        2.7       -1.7        4.9        2.0     -30.31
                 158        5.0        4.3       -1.9        6.1        3.6     -25.08
                 505        2.3        3.8       -2.0        4.8        1.3     -57.70
                 513        1.4        1.0       -1.7        2.7       -0.1     -44.26
                 161        5.4        1.4       -1.5        5.6        1.0     -12.29

                NODE        Vxx        Vyy
          ---- ------ ---------- ----------
          Max   Cent        8.3       10.3
                 158        9.3        8.1
                 505        9.3       12.4
                 513        8.3       12.4
                 161        8.3        8.1
          Min   Cent       -0.3        4.7
                 158       -8.5        4.9
                 505       -8.5        4.4
                 513        7.1        4.4
                 161        7.1        4.9

ELEM   MAT    SEC        LC        NODE        Fxx        Fyy        Fxy       Fmax       Fmin      ANGLE
```

```
------ ------ ------ -------- ---- ------ ---------- ---------- ---------- ---------- ---------- ----------
   469      1      1       SX (RS)   Cent        2.1        0.8        1.3        2.9        0.0      32.01
                                     505        3.1        1.2        1.3        3.8        0.6      26.57
                                     506        3.1        0.7        1.3        3.7        0.1      23.17
                                     514        1.1        0.7        1.3        2.2       -0.4      40.09
                                     513        1.1        1.2        1.3        2.5       -0.1      45.91

                                    NODE        Mxx        Myy        Mxy       Mmax       Mmin      ANGLE
                                ---- ------ ---------- ---------- ---------- ---------- ---------- ----------
                                    Cent        5.2        1.4        0.3        5.3        1.4       4.55
                                     505        7.0        3.1        0.3        7.1        3.0       4.75
                                     506        4.8        1.6        0.4        4.9        1.6       7.27
                                     514        4.7        0.9        0.4        4.8        0.8       5.84
                                     513        4.4        0.5        0.3        4.4        0.5       3.76

                                    NODE        Vxx        Vyy
                                ---- ------ ---------- ----------
                                    Cent        1.6        3.2
                                     505        3.5        5.0
                                     506        3.5        1.4
                                     514        0.6        1.4
                                     513        0.6        5.0


                          LC        NODE        Fxx        Fyy        Fxy       Fmax       Fmin      ANGLE
                       -------- ---- ------ ---------- ---------- ---------- ---------- ---------- ----------
                          SY (RS)   Cent        0.8        0.8        2.7        3.5       -1.9      45.31
                                     505        1.4        1.8        2.7        4.3       -1.1      47.37
                                     506        1.4        0.2        2.7        3.6       -2.0      38.70
                                     514        0.3        0.2        2.7        2.9       -2.5      44.39
                                     513        0.3        1.8        2.7        3.9       -1.8      52.96

                                    NODE        Mxx        Myy        Mxy       Mmax       Mmin      ANGLE
                                ---- ------ ---------- ---------- ---------- ---------- ---------- ----------
                                    Cent        0.7        2.3        0.5        2.4        0.5      74.26
                                     505        1.8        3.7        0.6        3.9        1.7      74.14
                                     506        0.8        1.7        0.4        1.9        0.7      67.64
                                     514        0.4        1.6        0.5        1.8        0.3      70.21
                                     513        0.7        2.1        0.6        2.4        0.4      69.90

                                    NODE        Vxx        Vyy
                                ---- ------ ---------- ----------
                                    Cent        2.1        1.6
                                     505        3.1        2.9
                                     506        3.1        0.3
                                     514        1.1        0.3
                                     513        1.1        2.9


                          LC        NODE        Fxx        Fyy        Fxy       Fmax       Fmin      ANGLE
                       -------- ---- ------ ---------- ---------- ---------- ---------- ---------- ----------
                       RC ENV~1  Max   Cent        0.9        1.3        2.2        2.8        0.3      55.61
                                     505        1.5        2.0        2.2        3.3        0.7      58.66
                                     506        1.5        1.8        2.2        2.6        0.7      52.57
                                     514        0.4        1.8        2.2        3.1       -0.0     -51.87
                                     513        0.4        2.0        2.2        3.3       -0.0      59.52
                                 Min   Cent       -4.4       -0.4       -3.2        0.5       -5.3     -64.26
                                     505       -6.4       -1.7       -3.2       -0.3       -7.2     -67.92
                                     506       -6.4        0.1       -3.2        0.7       -7.0     -71.60
                                     514       -2.4        0.1       -3.2        0.7       -3.6      87.14
                                     513       -2.4       -1.7       -3.2        0.4       -4.6     -51.18

                                    NODE        Mxx        Myy        Mxy       Mmax       Mmin      ANGLE
                                ---- ------ ---------- ---------- ---------- ---------- ---------- ----------
                                 Max   Cent        6.8        5.6       -0.6        8.9        4.1     -47.35
                                     505       12.7       11.4       -0.5       15.2        8.8     -40.93
                                     506        3.7        6.4       -0.7        7.9        3.3     -66.37
                                     514        4.2        3.5       -0.5        5.9        2.5     -53.60
                                     513        7.4        3.5       -0.4        8.4        3.2     -21.92
                                 Min   Cent       -3.7        0.6       -3.9        1.9       -4.0     -75.61
                                     505       -2.2        1.5       -3.6        2.6       -2.6     -73.55
                                     506       -6.0        1.4       -3.9        1.8       -6.3     -78.99
                                     514       -5.2        0.2       -3.8        1.3       -5.5     -55.63
                                     513       -1.3       -0.8       -3.6        1.4       -1.9     -65.63

                                    NODE        Vxx        Vyy
                                ---- ------ ---------- ----------
                                 Max   Cent       15.9       11.9
                                     505       20.9       17.4
```

			506	20.9	6.4			
			514	10.9	6.4			
			513	10.9	17.4			
		Min	Cent	6.2	1.5			
			505	6.6	1.7			
			506	6.6	1.3			
			514	5.4	1.3			
			513	5.4	1.7			

LC		NODE	Fxx	Fyy	Fxy	Fmax	Fmin	ANGLE
RC ENV~2	Max	Cent	0.2	0.7	0.3	1.1	0.0	-70.15
		505	0.5	0.6	0.3	0.9	0.2	49.59
		506	0.5	1.3	0.3	1.7	0.2	-76.07
		514	-0.1	1.3	0.3	1.9	-0.2	-65.68
		513	-0.1	0.6	0.3	0.7	-0.2	-56.13
	Min	Cent	-3.1	0.3	-1.6	0.5	-3.7	-87.81
		505	-4.5	-0.3	-1.6	0.2	-5.0	-70.61
		506	-4.5	0.5	-1.6	0.6	-4.9	-88.09
		514	-1.7	0.5	-1.6	0.6	-2.4	-88.00
		513	-1.7	-0.3	-1.6	0.4	-2.7	-63.57

		NODE	Mxx	Myy	Mxy	Mmax	Mmin	ANGLE
	Max	Cent	4.0	4.1	-1.1	6.3	1.7	-48.25
		505	9.1	8.3	-1.0	10.9	6.5	-41.31
		506	0.3	4.7	-1.1	5.7	-0.6	-67.54
		514	1.2	2.5	-1.0	4.1	-0.5	-55.02
		513	5.3	1.4	-1.0	6.0	0.9	-21.67
	Min	Cent	-0.7	2.1	-2.7	2.8	-1.4	-66.02
		505	1.8	3.7	-2.5	4.6	0.9	-59.99
		506	-3.2	2.2	-2.7	2.6	-3.6	-75.61
		514	-2.6	1.2	-2.6	1.7	-3.1	-71.63
		513	1.1	1.0	-2.4	2.7	-0.7	-46.33

		NODE	Vxx	Vyy
	Max	Cent	11.7	8.5
		505	15.2	12.4
		506	15.2	4.6
		514	8.1	4.6
		513	8.1	12.4
	Min	Cent	7.5	3.2
		505	8.5	4.4
		506	8.5	2.1
		514	6.4	2.1
		513	6.4	4.4

ELEM	MAT	SEC	LC		NODE	Fxx	Fyy	Fxy	Fmax	Fmin	ANGLE
470	1	1	SX (RS)		Cent	1.9	0.6	0.6	2.2	0.3	21.22
					506	2.3	0.7	0.6	2.5	0.5	19.27
					507	2.3	0.4	0.6	2.5	0.2	17.00
					515	1.6	0.4	0.6	1.9	0.2	23.41
					514	1.6	0.7	0.6	1.9	0.4	27.29

	NODE	Mxx	Myy	Mxy	Mmax	Mmin	ANGLE
	Cent	4.1	1.2	0.4	4.1	1.1	7.72
	506	4.7	1.6	0.5	4.8	1.5	8.44
	507	3.4	1.3	0.4	3.5	1.2	10.25
	515	3.7	1.0	0.3	3.7	1.0	6.32
	514	4.5	0.8	0.4	4.6	0.8	5.94

	NODE	Vxx	Vyy
	Cent	2.1	1.1
	506	2.4	1.4
	507	2.4	0.7
	515	1.7	0.7
	514	1.7	1.4

LC		NODE	Fxx	Fyy	Fxy	Fmax	Fmin	ANGLE
SY (RS)		Cent	0.6	0.1	2.0	2.4	-1.7	41.87
		506	0.7	0.2	2.0	2.5	-1.6	41.63

		507	0.7	0.1	2.0	2.5	-1.7	40.71
		515	0.5	0.1	2.0	2.3	-1.8	42.04
		514	0.5	0.2	2.0	2.4	-1.7	42.97

	NODE	Mxx	Myy	Mxy	Mmax	Mmin	ANGLE
	Cent	0.4	1.5	0.3	1.6	0.3	75.06
	506	0.6	1.8	0.4	1.9	0.5	74.57
	507	0.4	1.4	0.3	1.5	0.3	73.31
	515	0.4	1.1	0.3	1.2	0.3	71.19
	514	0.4	1.7	0.3	1.8	0.3	76.32

	NODE	Vxx	Vyy
	Cent	0.4	0.4
	506	0.4	0.3
	507	0.4	0.5
	515	0.6	0.5
	514	0.6	0.3

LC		NODE	Fxx	Fyy	Fxy	Fmax	Fmin	ANGLE
RC ENV~1	Max	Cent	0.8	1.8	1.9	2.1	0.5	55.83
		506	1.0	1.8	1.9	2.2	0.7	56.51
		507	1.0	1.7	1.9	2.1	0.6	55.63
		515	0.6	1.7	1.9	2.1	0.4	55.08
		514	0.6	1.8	1.9	2.2	0.4	55.97
	Min	Cent	-4.1	0.2	-2.2	0.4	-4.3	-76.75
		506	-4.8	0.0	-2.2	0.2	-4.9	-77.83
		507	-4.8	0.3	-2.2	0.5	-4.9	-78.63
		515	-3.5	0.3	-2.2	0.5	-3.7	-75.50
		514	-3.5	0.0	-2.2	0.3	-3.7	-74.24

	NODE	Mxx	Myy	Mxy	Mmax	Mmin	ANGLE
Max	Cent	1.7	4.1	-0.4	5.2	1.6	-69.89
	506	3.9	6.5	-0.4	7.7	3.7	-67.59
	507	-0.8	4.2	-0.3	4.8	-0.8	-76.94
	515	-0.0	2.7	-0.4	3.5	-0.1	-72.94
	514	3.6	3.5	-0.5	5.1	2.5	-57.39
Min	Cent	-6.5	0.7	-3.3	1.0	-6.7	-73.91
	506	-5.6	1.4	-3.4	1.8	-5.8	-79.96
	507	-8.1	0.8	-3.0	0.9	-8.7	-79.67
	515	-7.5	0.3	-3.1	0.5	-8.2	-78.38
	514	-5.4	0.1	-3.5	0.8	-5.6	-60.10

	NODE	Vxx	Vyy
Max	Cent	10.3	4.9
	506	11.1	6.4
	507	11.1	3.4
	515	9.5	3.4
	514	9.5	6.4
Min	Cent	3.2	1.0
	506	3.2	1.3
	507	3.2	0.8
	515	3.3	0.8
	514	3.3	1.3

LC		NODE	Fxx	Fyy	Fxy	Fmax	Fmin	ANGLE
RC ENV~2	Max	Cent	0.1	1.3	0.2	1.4	0.0	-82.06
		506	0.2	1.3	0.2	1.4	0.1	-82.76
		507	0.2	1.3	0.2	1.3	0.1	-82.69
		515	-0.1	1.3	0.2	1.4	-0.1	-81.21
		514	-0.1	1.3	0.2	1.4	-0.1	-81.32
	Min	Cent	-2.9	0.5	-0.7	0.6	-3.0	71.91
		506	-3.3	0.5	-0.7	0.6	-3.4	65.48
		507	-3.3	0.6	-0.7	0.6	-3.4	88.86
		515	-2.5	0.6	-0.7	0.6	-2.6	88.89
		514	-2.5	0.5	-0.7	0.5	-2.6	73.26

	NODE	Mxx	Myy	Mxy	Mmax	Mmin	ANGLE
Max	Cent	-1.4	3.1	-0.7	3.7	-2.0	-71.33
	506	0.7	4.8	-0.8	5.6	-0.1	-68.95
	507	-3.7	3.1	-0.6	3.5	-4.0	-78.00

					515	-3.1	2.0	-0.6	2.5	-3.5	-74.37
					514	0.6	2.3	-0.8	3.6	-0.6	-59.04
				Min	Cent	-4.2	1.4	-2.2	1.6	-4.5	-78.29
					506	-2.8	2.3	-2.3	2.5	-3.1	-77.35
					507	-5.9	1.3	-2.0	1.5	-6.3	-81.39
					515	-5.5	0.6	-2.1	0.9	-5.9	-79.47
					514	-2.8	1.2	-2.4	1.6	-3.2	-73.52

		NODE	Vxx	Vyy
Max	Cent	7.5	3.5
	506	8.1	4.6
	507	8.1	2.5
	515	6.9	2.5
	514	6.9	4.6
Min	Cent	4.4	1.7
	506	4.6	2.1
	507	4.6	1.3
	515	4.3	1.3
	514	4.3	2.1

ELEM	MAT	SEC	LC		NODE	Fxx	Fyy	Fxy	Fmax	Fmin	ANGLE
471	1	1	SX (RS)		Cent	1.7	0.4	0.4	1.8	0.3	15.83
					507	1.9	0.5	0.4	2.0	0.4	15.30
					508	1.9	0.3	0.4	1.9	0.2	13.72
					516	1.5	0.3	0.4	1.7	0.2	16.38
					515	1.5	0.5	0.4	1.7	0.3	18.58

	NODE	Mxx	Myy	Mxy	Mmax	Mmin	ANGLE
	Cent	3.1	1.0	0.2	3.1	1.0	5.18
	507	3.5	1.3	0.2	3.6	1.3	5.48
	508	2.6	0.9	0.1	2.6	0.9	4.65
	516	2.8	0.8	0.2	2.8	0.8	5.26
	515	3.6	1.0	0.2	3.6	0.9	5.22

	NODE	Vxx	Vyy
	Cent	2.0	0.5
	507	2.0	0.7
	508	2.0	0.4
	516	1.9	0.4
	515	1.9	0.7

LC		NODE	Fxx	Fyy	Fxy	Fmax	Fmin	ANGLE
SY (RS)		Cent	0.4	0.1	1.8	2.1	-1.6	43.04
		507	0.5	0.1	1.8	2.1	-1.5	42.17
		508	0.5	0.2	1.8	2.2	-1.5	42.62
		516	0.3	0.2	1.8	2.1	-1.6	43.94
		515	0.3	0.1	1.8	2.0	-1.6	43.49

	NODE	Mxx	Myy	Mxy	Mmax	Mmin	ANGLE
	Cent	0.3	1.3	0.3	1.3	0.2	76.37
	507	0.4	1.5	0.3	1.5	0.3	73.92
	508	0.2	1.4	0.3	1.5	0.2	76.90
	516	0.2	1.1	0.2	1.2	0.2	78.84
	515	0.4	1.2	0.2	1.2	0.3	75.73

	NODE	Vxx	Vyy
	Cent	0.2	0.5
	507	0.3	0.5
	508	0.3	0.5
	516	0.2	0.5
	515	0.2	0.5

LC		NODE	Fxx	Fyy	Fxy	Fmax	Fmin	ANGLE
RC ENV~1	Max	Cent	0.6	1.9	1.8	2.1	0.4	57.37
		507	0.7	1.8	1.8	2.0	0.5	56.76
		508	0.7	1.9	1.8	2.1	0.5	57.43
		516	0.5	1.9	1.8	2.1	0.3	57.99
		515	0.5	1.8	1.8	2.0	0.4	57.34

Min	Cent	-3.7	0.4	-1.9	0.5	-3.7	-81.97
	507	-3.9	0.3	-1.9	0.4	-3.9	-82.15
	508	-3.9	0.5	-1.9	0.6	-3.9	-82.64
	516	-3.5	0.5	-1.9	0.6	-3.6	-81.78
	515	-3.5	0.3	-1.9	0.4	-3.6	-81.16

	NODE	Mxx	Myy	Mxy	Mmax	Mmin	ANGLE
Max	Cent	-1.5	3.0	-0.2	3.4	-1.5	-79.16
	507	-0.4	4.4	-0.1	4.8	-0.4	-78.80
	508	-2.9	3.1	-0.0	3.3	-2.9	-81.97
	516	-2.4	2.3	-0.2	2.3	-2.4	-79.80
	515	-0.2	2.7	-0.3	3.2	-0.2	-75.36
Min	Cent	-8.4	0.3	-2.6	0.4	-8.9	-82.89
	507	-7.7	0.8	-2.6	0.9	-8.1	-81.51
	508	-9.6	0.3	-2.3	0.3	-9.9	-84.32
	516	-9.2	-0.2	-2.5	0.0	-9.7	-84.33
	515	-7.5	0.3	-2.8	0.4	-8.0	-80.97

	NODE	Vxx	Vyy
Max	Cent	5.1	2.9
	507	5.2	3.4
	508	5.2	2.4
	516	4.9	2.4
	515	4.9	3.4
Min	Cent	0.6	0.8
	507	0.5	0.8
	508	0.5	0.6
	516	0.6	0.6
	515	0.6	0.8

LC		NODE	Fxx	Fyy	Fxy	Fmax	Fmin	ANGLE
RC ENV~2	Max	Cent	-0.1	1.4	0.1	1.4	-0.1	-86.83
		507	-0.1	1.3	0.1	1.3	-0.1	-86.91
		508	-0.1	1.4	0.1	1.4	-0.1	-86.95
		516	-0.2	1.4	0.1	1.4	-0.2	-86.75
		515	-0.2	1.3	0.1	1.3	-0.2	-86.69
	Min	Cent	-2.6	0.6	-0.3	0.6	-2.6	81.25
		507	-2.8	0.6	-0.3	0.6	-2.8	80.05
		508	-2.8	0.7	-0.3	0.7	-2.8	81.17
		516	-2.5	0.7	-0.3	0.7	-2.5	82.19
		515	-2.5	0.6	-0.3	0.6	-2.5	81.32

	NODE	Mxx	Myy	Mxy	Mmax	Mmin	ANGLE
Max	Cent	-4.3	2.3	-0.4	2.5	-4.5	-80.33
	507	-3.3	3.2	-0.4	3.5	-3.5	-79.90
	508	-5.4	2.3	-0.3	2.5	-5.4	-82.91
	516	-5.1	1.5	-0.3	1.7	-5.2	-81.00
	515	-3.1	2.0	-0.5	2.3	-3.5	-76.81
Min	Cent	-6.2	0.7	-1.7	0.9	-6.5	-82.10
	507	-5.7	1.3	-1.7	1.5	-5.8	-82.03
	508	-7.1	0.7	-1.5	1.0	-7.3	-80.02
	516	-6.8	0.1	-1.7	0.4	-7.1	-77.94
	515	-5.5	0.6	-1.9	0.9	-5.8	-80.45

	NODE	Vxx	Vyy
Max	Cent	3.7	2.1
	507	3.8	2.5
	508	3.8	1.7
	516	3.6	1.7
	515	3.6	2.5
Min	Cent	1.8	1.3
	507	1.8	1.3
	508	1.8	1.1
	516	1.8	1.1
	515	1.8	1.3

ELEM	MAT	SEC	LC		NODE	Fxx	Fyy	Fxy	Fmax	Fmin	ANGLE
472	1	1	SX (RS)		Cent	1.6	0.3	0.5	1.7	0.1	18.09
					508	1.7	0.3	0.5	1.8	0.2	17.39
					509	1.7	0.2	0.5	1.8	0.1	16.13
					517	1.4	0.2	0.5	1.6	0.0	18.84

		516	1.4	0.3	0.5	1.6	0.2	20.49

	NODE	Mxx	Myy	Mxy	Mmax	Mmin	ANGLE
	Cent	2.5	0.8	0.2	2.5	0.8	8.05
	508	2.7	1.0	0.1	2.7	0.9	4.94
	509	2.2	1.0	0.3	2.3	0.9	10.97
	517	2.4	0.7	0.3	2.5	0.6	9.96
	516	2.8	0.8	0.2	2.8	0.8	6.06

	NODE	Vxx	Vyy
	Cent	2.1	0.7
	508	2.2	0.4
	509	2.2	1.0
	517	2.0	1.0
	516	2.0	0.4

LC		NODE	Fxx	Fyy	Fxy	Fmax	Fmin	ANGLE
SY (RS)		Cent	0.2	0.2	1.7	1.9	-1.5	44.71
		508	0.3	0.2	1.7	1.9	-1.4	44.39
		509	0.3	0.2	1.7	1.9	-1.5	44.31
		517	0.2	0.2	1.7	1.9	-1.5	44.93
		516	0.2	0.2	1.7	1.9	-1.5	45.00

	NODE	Mxx	Myy	Mxy	Mmax	Mmin	ANGLE
	Cent	0.3	1.5	0.2	1.5	0.3	80.69
	508	0.4	1.4	0.3	1.5	0.4	73.92
	509	0.1	1.9	0.3	1.9	0.1	80.81
	517	0.2	1.5	0.1	1.6	0.2	85.36
	516	0.4	1.1	0.1	1.1	0.4	79.98

	NODE	Vxx	Vyy
	Cent	0.3	0.6
	508	0.4	0.5
	509	0.4	0.6
	517	0.2	0.6
	516	0.2	0.5

LC		NODE	Fxx	Fyy	Fxy	Fmax	Fmin	ANGLE
RC ENV~1	Max	Cent	0.5	2.0	1.7	2.0	0.2	59.31
		508	0.6	2.0	1.7	2.0	0.4	59.04
		509	0.6	2.0	1.7	2.0	0.3	59.06
		517	0.4	2.0	1.7	2.0	0.1	59.50
		516	0.4	2.0	1.7	2.0	0.2	59.48
	Min	Cent	-3.4	0.6	-1.7	0.6	-3.4	-81.84
		508	-3.4	0.5	-1.7	0.5	-3.4	-81.99
		509	-3.4	0.6	-1.7	0.7	-3.4	-82.32
		517	-3.4	0.6	-1.7	0.7	-3.4	-81.68
		516	-3.4	0.5	-1.7	0.6	-3.4	-81.29

	NODE	Mxx	Myy	Mxy	Mmax	Mmin	ANGLE
Max	Cent	-2.9	2.9	0.1	2.9	-2.9	89.40
	508	-2.8	3.1	0.1	3.3	-2.8	-83.44
	509	-3.2	3.6	0.3	3.6	-3.2	88.34
	517	-2.9	2.5	0.3	2.5	-2.9	89.60
	516	-2.4	2.3	0.0	2.3	-2.4	-89.31
Min	Cent	-8.9	-0.1	-2.0	-0.1	-9.2	-86.72
	508	-9.5	0.3	-2.0	0.3	-9.7	-85.57
	509	-8.7	-0.1	-1.8	-0.1	-9.0	-86.60
	517	-8.5	-0.8	-2.0	-0.6	-8.8	-88.01
	516	-8.9	-0.2	-2.2	0.0	-9.3	-86.58

	NODE	Vxx	Vyy
Max	Cent	2.1	2.7
	508	2.2	2.4
	509	2.2	3.2
	517	2.1	3.2
	516	2.1	2.4
Min	Cent	-2.0	0.7
	508	-2.2	0.6

		509	-2.2	0.5			
		517	-1.9	0.5			
		516	-1.9	0.6			

LC		NODE	Fxx	Fyy	Fxy	Fmax	Fmin	ANGLE
RC ENV~2	Max	Cent	-0.3	1.4	0.1	1.4	-0.3	-89.05
		508	-0.3	1.4	0.1	1.4	-0.3	-89.05
		509	-0.3	1.4	0.1	1.4	-0.3	-89.05
		517	-0.3	1.4	0.1	1.4	-0.3	-89.04
		516	-0.3	1.4	0.1	1.4	-0.3	-89.04
	Min	Cent	-2.4	0.7	-0.1	0.7	-2.4	83.91
		508	-2.4	0.6	-0.1	0.6	-2.4	83.59
		509	-2.4	0.7	-0.1	0.7	-2.4	84.01
		517	-2.4	0.7	-0.1	0.7	-2.4	84.21
		516	-2.4	0.6	-0.1	0.6	-2.4	83.82

		NODE	Mxx	Myy	Mxy	Mmax	Mmin	ANGLE
	Max	Cent	-5.3	1.9	-0.1	1.9	-5.3	-84.64
		508	-5.3	2.3	-0.2	2.4	-5.3	-84.37
		509	-5.4	2.3	-0.0	2.4	-5.4	-86.12
		517	-5.2	1.3	-0.0	1.3	-5.2	-84.83
		516	-5.0	1.5	-0.2	1.7	-5.1	-82.95
	Min	Cent	-6.6	0.3	-1.3	0.5	-6.8	-79.99
		508	-7.0	0.8	-1.3	1.0	-7.1	-80.67
		509	-6.5	0.7	-1.1	0.8	-6.6	-81.35
		517	-6.3	-0.3	-1.3	-0.1	-6.5	-78.93
		516	-6.6	0.1	-1.4	0.4	-6.8	-78.60

		NODE	Vxx	Vyy
	Max	Cent	0.7	2.0
		508	0.7	1.7
		509	0.7	2.3
		517	0.8	2.3
		516	0.8	1.7
	Min	Cent	-1.0	1.4
		508	-1.1	1.1
		509	-1.1	1.5
		517	-1.0	1.5
		516	-1.0	1.1

ELEM	MAT	SEC	LC		NODE	Fxx	Fyy	Fxy	Fmax	Fmin	ANGLE
473	1	1	SX (RS)		Cent	1.5	0.2	0.7	1.8	-0.2	23.97
					509	1.8	0.3	0.7	2.1	-0.0	21.89
					510	1.8	0.1	0.7	2.1	-0.2	20.46
					518	1.2	0.1	0.7	1.6	-0.3	26.34
					517	1.2	0.3	0.7	1.6	-0.1	28.44

		NODE	Mxx	Myy	Mxy	Mmax	Mmin	ANGLE
		Cent	2.5	0.7	0.5	2.6	0.6	15.42
		509	2.2	1.0	0.5	2.4	0.8	19.39
		510	2.9	1.1	0.6	3.1	0.9	17.24
		518	2.7	0.4	0.5	2.8	0.3	12.19
		517	2.5	0.7	0.4	2.6	0.6	11.89

		NODE	Vxx	Vyy
		Cent	2.5	1.5
		509	2.9	1.0
		510	2.9	1.9
		518	2.0	1.9
		517	2.0	1.0

LC		NODE	Fxx	Fyy	Fxy	Fmax	Fmin	ANGLE
SY (RS)		Cent	0.2	0.2	1.6	1.8	-1.4	44.59
		509	0.2	0.2	1.6	1.8	-1.4	45.45
		510	0.2	0.2	1.6	1.8	-1.4	45.60
		518	0.3	0.2	1.6	1.9	-1.3	44.07
		517	0.3	0.2	1.6	1.9	-1.3	43.93

		NODE	Mxx	Myy	Mxy	Mmax	Mmin	ANGLE

	NODE	Vxx	Vyy
	Cent	0.6	0.5
	509	0.1	0.6
	510	0.1	0.3
	518	1.1	0.3
	517	1.1	0.6

LC		NODE	Fxx	Fyy	Fxy	Fmax	Fmin	ANGLE
RC ENV~1	Max	Cent	0.5	2.0	1.6	2.0	-0.1	-89.60
		509	0.8	2.0	1.6	2.0	0.2	-89.59
		510	0.8	2.0	1.6	2.0	0.1	-89.59
		518	0.2	2.0	1.6	2.1	-0.3	59.35
		517	0.2	2.0	1.6	2.0	-0.2	59.12
	Min	Cent	-3.1	0.7	-1.6	0.8	-3.1	-78.02
		509	-3.1	0.6	-1.6	0.7	-3.1	-78.60
		510	-3.1	0.6	-1.6	0.9	-3.1	-79.12
		518	-3.2	0.6	-1.6	0.9	-3.2	-77.38
		517	-3.2	0.6	-1.6	0.8	-3.2	-76.68

	NODE	Mxx	Myy	Mxy	Mmax	Mmin	ANGLE
Max	Cent	-2.2	3.6	0.8	3.6	-2.3	86.95
	509	-3.4	3.5	0.6	3.5	-3.5	86.53
	510	-1.1	5.0	1.0	5.1	-1.3	85.94
	518	-1.2	3.5	0.9	3.6	-1.5	85.66
	517	-2.6	2.5	0.5	2.5	-2.6	88.14
Min	Cent	-7.1	-0.6	-1.4	-0.6	-7.2	88.14
	509	-8.9	-0.1	-1.5	-0.1	-9.1	-87.89
	510	-6.9	-0.3	-1.2	-0.2	-6.9	87.92
	518	-6.6	-1.8	-1.3	-1.8	-6.6	84.60
	517	-7.9	-0.6	-1.7	-0.5	-8.1	89.24

	NODE	Vxx	Vyy
Max	Cent	0.1	4.8
	509	0.3	3.2
	510	0.3	6.5
	518	-0.1	6.5
	517	-0.1	3.2
Min	Cent	-6.4	0.8
	509	-6.9	0.5
	510	-6.9	1.0
	518	-5.9	1.0
	517	-5.9	0.5

LC		NODE	Fxx	Fyy	Fxy	Fmax	Fmin	ANGLE
RC ENV~2	Max	Cent	-0.5	1.5	0.1	1.5	-0.5	-89.70
		509	-0.5	1.5	0.1	1.5	-0.5	-89.70
		510	-0.5	1.5	0.1	1.5	-0.5	-89.70
		518	-0.4	1.5	0.1	1.5	-0.4	-89.71
		517	-0.4	1.5	0.1	1.5	-0.4	-89.71
	Min	Cent	-2.2	0.7	-0.1	0.7	-2.2	83.77
		509	-2.2	0.7	-0.1	0.7	-2.2	83.68
		510	-2.2	0.7	-0.1	0.7	-2.2	84.09
		518	-2.3	0.7	-0.1	0.7	-2.3	83.86
		517	-2.3	0.7	-0.1	0.7	-2.3	83.42

	NODE	Mxx	Myy	Mxy	Mmax	Mmin	ANGLE
Max	Cent	-4.6	2.0	0.4	2.0	-4.6	-89.74
	509	-5.6	2.3	0.2	2.3	-5.6	-88.24
	510	-3.6	3.4	0.5	3.4	-3.7	88.73
	518	-3.4	1.1	0.5	1.1	-3.4	84.55
	517	-5.0	1.3	0.2	1.3	-5.0	-87.71
Min	Cent	-5.2	0.2	-0.8	0.3	-5.3	-81.92
	509	-6.6	0.6	-0.9	0.8	-6.7	-82.88
	510	-4.6	1.2	-0.7	1.3	-4.7	-83.66

518	-4.5	-0.7	-0.8	-0.5	-4.6	-79.14
517	-5.9	-0.2	-1.0	-0.1	-6.0	-80.18

	NODE	Vxx	Vyy
Max	Cent	-2.0	3.5
	509	-2.1	2.3
	510	-2.1	4.7
	518	-1.8	4.7
	517	-1.8	2.3
Min	Cent	-4.6	2.2
	509	-4.9	1.5
	510	-4.9	2.9
	518	-4.2	2.9
	517	-4.2	1.5

ELEM	MAT	SEC	LC		NODE	Fxx	Fyy	Fxy	Fmax	Fmin	ANGLE
474	1	1	SX (RS)		Cent	1.4	0.5	1.4	2.4	-0.5	36.22
					510	2.4	0.1	1.4	3.0	-0.5	25.37
					511	2.4	1.1	1.4	3.2	0.2	32.10
					519	0.6	1.1	1.4	2.2	-0.6	50.01
					518	0.6	0.1	1.4	1.7	-1.0	40.53

	NODE	Mxx	Myy	Mxy	Mmax	Mmin	ANGLE
	Cent	3.4	0.8	0.3	3.4	0.7	7.13
	510	3.0	1.1	0.5	3.1	1.0	13.96
	511	5.6	3.0	0.2	5.6	3.0	3.34
	519	2.2	1.3	0.1	2.2	1.3	6.48
	518	3.0	0.4	0.5	3.1	0.3	11.36

	NODE	Vxx	Vyy
	Cent	2.2	4.4
	510	4.5	1.9
	511	4.5	6.8
	519	1.3	6.8
	518	1.3	1.9

LC		NODE	Fxx	Fyy	Fxy	Fmax	Fmin	ANGLE
SY (RS)		Cent	0.5	1.1	2.2	3.0	-1.4	49.11
		510	1.1	0.2	2.2	2.9	-1.6	39.09
		511	1.1	2.3	2.2	4.0	-0.5	52.78
		519	0.2	2.3	2.2	3.7	-1.2	58.29
		518	0.2	0.2	2.2	2.4	-2.0	45.34

	NODE	Mxx	Myy	Mxy	Mmax	Mmin	ANGLE
	Cent	0.6	3.6	0.3	3.7	0.6	84.47
	510	1.3	2.5	0.1	2.5	1.2	83.99
	511	2.9	6.3	0.1	6.3	2.9	87.53
	519	1.2	3.3	0.5	3.4	1.0	76.71
	518	0.2	2.6	0.6	2.7	0.1	77.11

	NODE	Vxx	Vyy
	Cent	4.1	2.6
	510	6.0	0.3
	511	6.0	5.0
	519	2.2	5.0
	518	2.2	0.3

LC		NODE	Fxx	Fyy	Fxy	Fmax	Fmin	ANGLE
RC ENV~1	Max	Cent	0.4	2.1	2.2	3.3	-0.6	59.31
		510	1.4	2.1	2.2	2.9	-0.2	50.86
		511	1.4	3.1	2.2	4.3	0.2	61.88
		519	-0.4	3.1	2.2	4.2	-0.6	65.76
		518	-0.4	2.1	2.2	2.6	-0.6	56.49
	Min	Cent	-2.9	-0.3	-2.1	0.8	-3.1	77.44
		510	-3.4	0.7	-2.1	0.9	-3.7	79.74
		511	-3.4	-1.5	-2.1	0.2	-4.0	-69.91
		519	-3.1	-1.5	-2.1	0.6	-3.5	-58.20
		518	-3.1	0.7	-2.1	1.0	-3.1	76.63

	NODE	Mxx	Myy	Mxy	Mmax	Mmin	ANGLE
Max	Cent	1.0	5.3	1.4	5.5	0.3	80.73
	510	-1.4	4.8	1.3	4.9	-1.7	83.11
	511	5.3	9.8	1.8	10.0	4.6	81.07
	519	1.0	3.0	1.3	3.5	-0.1	71.02
	518	-0.3	3.5	1.2	3.7	-0.9	80.24
Min	Cent	-5.8	-2.0	-0.5	-1.7	-5.8	65.70
	510	-7.4	-0.1	-0.5	-0.1	-7.4	82.73
	511	-5.9	-2.7	-0.3	-2.0	-6.0	52.92
	519	-3.7	-3.6	-0.8	-2.6	-3.9	15.78
	518	-6.3	-1.6	-1.0	-1.6	-6.3	88.50

	NODE	Vxx	Vyy
Max	Cent	-1.1	11.2
	510	-0.8	6.5
	511	-0.8	15.9
	519	-1.4	15.9
	518	-1.4	6.5
Min	Cent	-12.2	0.6
	510	-16.1	1.0
	511	-16.1	0.1
	519	-8.3	0.1
	518	-8.3	1.0

LC		NODE	Fxx	Fyy	Fxy	Fmax	Fmin	ANGLE
RC ENV~2	Max	Cent	-0.6	1.5	0.3	1.5	-0.7	-89.58
		510	-0.8	1.5	0.3	1.5	-0.8	-89.56
		511	-0.8	1.5	0.3	1.5	-0.8	-89.56
		519	-0.5	1.5	0.3	1.5	-0.5	-89.59
		518	-0.5	1.5	0.3	1.5	-0.5	-89.59
	Min	Cent	-2.1	0.6	-0.1	0.7	-2.1	79.37
		510	-2.0	0.7	-0.1	0.7	-2.0	81.06
		511	-2.0	0.5	-0.1	0.6	-2.0	79.86
		519	-2.2	0.5	-0.1	0.6	-2.2	76.96
		518	-2.2	0.7	-0.1	0.8	-2.2	78.84

	NODE	Mxx	Myy	Mxy	Mmax	Mmin	ANGLE
Max	Cent	-0.9	2.2	1.1	2.6	-1.2	73.99
	510	-4.2	3.3	1.0	3.4	-4.3	82.95
	511	2.7	5.4	1.4	5.8	2.2	68.80
	519	0.4	-0.1	1.0	0.9	-1.3	31.37
	518	-2.5	1.3	0.7	1.4	-2.6	81.85
Min	Cent	-2.8	0.2	-0.2	0.2	-2.8	-86.56
	510	-4.9	1.1	-0.1	1.2	-4.9	-88.59
	511	-0.9	2.2	0.0	2.2	-1.0	86.57
	519	-1.7	-2.3	-0.3	-1.6	-2.4	-34.40
	518	-3.7	-0.5	-0.5	-0.4	-3.7	-81.00

	NODE	Vxx	Vyy
Max	Cent	-5.2	8.1
	510	-6.7	4.7
	511	-6.7	11.5
	519	-3.6	11.5
	518	-3.6	4.7
Min	Cent	-8.8	4.8
	510	-11.6	2.9
	511	-11.6	6.6
	519	-6.0	6.6
	518	-6.0	2.9

ELEM	MAT	SEC	LC		NODE	Fxx	Fyy	Fxy	Fmax	Fmin	ANGLE
475	1	1	SX (RS)		Cent	0.3	0.3	1.0	1.3	-0.7	45.70
					511	1.0	0.7	1.0	1.9	-0.1	41.11
					512	1.0	0.1	1.0	1.6	-0.5	32.07
					520	0.5	0.1	1.0	1.3	-0.7	38.51
					519	0.5	0.7	1.0	1.6	-0.4	48.35

	NODE	Mxx	Myy	Mxy	Mmax	Mmin	ANGLE
	Cent	0.4	0.2	1.0	1.2	-0.7	41.40

511	6.3	3.1	1.4	6.9	2.6	20.62
512	9.1	1.8	0.2	9.1	1.8	1.75
520	2.0	0.4	0.2	2.0	0.4	5.82
519	1.9	1.3	1.4	3.1	0.1	39.45

NODE	Vxx	Vyy
Cent	13.0	3.4
511	25.8	6.8
512	25.8	0.0
520	1.1	0.0
519	1.1	6.8

LC		NODE	Fxx	Fyy	Fxy	Fmax	Fmin	ANGLE
SY (RS)		Cent	0.9	3.3	1.4	3.9	0.3	65.52
		511	1.5	2.1	1.4	3.2	0.4	50.99
		512	1.5	4.5	1.4	5.0	1.0	68.83
		520	0.3	4.5	1.4	4.9	-0.1	73.40
		519	0.3	2.1	1.4	2.8	-0.4	61.38

	NODE	Mxx	Myy	Mxy	Mmax	Mmin	ANGLE
	Cent	2.3	4.9	0.7	5.1	2.1	74.91
	511	0.7	5.5	0.6	5.6	0.6	83.38
	512	6.3	8.7	0.5	8.8	6.2	77.65
	520	2.0	2.0	0.6	2.6	1.4	43.65
	519	1.7	3.4	0.6	3.6	1.5	71.81

NODE	Vxx	Vyy
Cent	6.3	8.1
511	11.4	5.0
512	11.4	11.3
520	1.1	11.3
519	1.1	5.0

LC		NODE	Fxx	Fyy	Fxy	Fmax	Fmin	ANGLE
RC ENV~1	Max	Cent	-0.0	4.0	1.4	4.5	-0.5	72.80
		511	0.6	2.9	1.4	3.5	-0.1	64.65
		512	0.6	5.2	1.4	5.6	0.2	74.44
		520	-0.5	5.2	1.4	5.5	-0.8	77.28
		519	-0.5	2.9	1.4	3.4	-0.8	70.83
	Min	Cent	-2.9	-2.5	-1.3	-0.8	-3.5	-38.06
		511	-2.9	-1.3	-1.3	-0.4	-3.3	-56.59
		512	-2.9	-3.7	-1.3	-1.6	-4.5	-31.56
		520	-2.9	-3.7	-1.3	-0.7	-4.3	-23.65
		519	-2.9	-1.3	-1.3	0.1	-2.9	-45.37

	NODE	Mxx	Myy	Mxy	Mmax	Mmin	ANGLE
Max	Cent	6.3	6.2	1.3	6.6	2.8	72.61
	511	7.1	9.3	2.4	9.6	5.6	79.48
	512	13.6	11.9	0.7	13.6	9.6	-0.11
	520	4.2	0.5	0.2	4.4	0.4	-8.69
	519	2.3	3.2	1.9	3.6	0.4	69.74
Min	Cent	-1.6	-3.6	-1.4	-1.5	-3.7	-11.07
	511	-5.6	-1.8	-0.5	0.1	-5.7	11.61
	512	-5.6	-5.5	-1.4	-2.8	-5.6	-8.17
	520	-2.2	-5.6	-2.3	-1.7	-6.3	-27.86
	519	-2.8	-3.6	-1.5	-2.6	-4.0	-11.21

	NODE	Vxx	Vyy
Max	Cent	9.5	16.2
	511	20.6	15.9
	512	20.6	18.9
	520	-0.8	18.9
	519	-0.8	15.9
Min	Cent	-16.6	-0.9
	511	-31.0	0.1
	512	-31.0	-3.6
	520	-4.4	-3.6
	519	-4.4	0.1

LC		NODE	Fxx	Fyy	Fxy	Fmax	Fmin	ANGLE
RC ENV~2	Max	Cent	-0.5	1.4	0.2	1.4	-0.5	-89.74
		511	-0.3	1.5	0.2	1.5	-0.4	-89.75
		512	-0.3	1.3	0.2	1.3	-0.4	-89.74
		520	-0.6	1.3	0.2	1.3	-0.7	-89.74
		519	-0.6	1.5	0.2	1.5	-0.7	-89.75
	Min	Cent	-2.1	0.6	-0.1	0.6	-2.1	82.37
		511	-2.1	0.5	-0.1	0.6	-2.1	80.72
		512	-2.1	0.6	-0.1	0.6	-2.1	85.29
		520	-2.1	0.6	-0.1	0.6	-2.1	85.97
		519	-2.1	0.5	-0.1	0.6	-2.1	82.99

	NODE	Mxx	Myy	Mxy	Mmax	Mmin	ANGLE
Max	Cent	4.3	1.7	0.5	4.3	1.6	9.22
	511	4.4	5.7	1.5	6.3	3.8	61.34
	512	9.5	4.8	0.3	9.5	4.8	0.82
	520	2.8	-1.5	-0.3	2.9	-1.6	-8.46
	519	1.4	0.0	0.6	1.6	-0.6	16.16
Min	Cent	0.7	-0.4	-0.8	0.9	-0.8	35.82
	511	0.2	2.4	-0.2	2.5	-0.0	82.13
	512	2.0	1.3	-0.9	2.4	1.0	-40.34
	520	-0.2	-3.8	-1.5	-0.1	-4.3	-13.80
	519	-0.9	-2.1	-0.9	-0.7	-2.5	48.72

	NODE	Vxx	Vyy
Max	Cent	-1.7	11.7
	511	-1.2	11.5
	512	-1.2	12.2
	520	-1.9	12.2
	519	-1.9	11.5
Min	Cent	-7.0	7.2
	511	-11.3	6.6
	512	-11.3	7.6
	520	-3.2	7.6
	519	-3.2	6.6

ELEM	MAT	SEC	LC		NODE	Fxx	Fyy	Fxy	Fmax	Fmin	ANGLE
476	1	1	SX (RS)		Cent	1.0	1.2	0.5	1.6	0.5	50.10
					161	1.3	1.4	0.5	1.9	0.8	46.98
					513	1.3	1.0	0.5	1.7	0.6	37.72
					521	0.7	1.0	0.5	1.4	0.3	52.85
					164	0.7	1.4	0.5	1.7	0.4	60.69

	NODE	Mxx	Myy	Mxy	Mmax	Mmin	ANGLE
	Cent	3.7	1.0	0.6	3.8	0.8	12.77
	161	4.2	1.4	1.0	4.6	1.1	18.39
	513	4.2	0.7	0.6	4.3	0.6	9.47
	521	3.7	0.6	0.3	3.7	0.6	5.23
	164	2.7	1.3	0.7	3.0	0.9	22.94

	NODE	Vxx	Vyy
	Cent	1.2	0.1
	161	0.4	0.3
	513	0.4	0.1
	521	2.1	0.1
	164	2.1	0.3

LC		NODE	Fxx	Fyy	Fxy	Fmax	Fmin	ANGLE
SY (RS)		Cent	0.4	1.1	1.7	2.5	-1.0	51.06
		161	0.7	1.3	1.7	2.7	-0.7	50.55
		513	0.7	0.9	1.7	2.5	-0.9	46.93
		521	0.1	0.9	1.7	2.3	-1.2	51.53
		164	0.1	1.3	1.7	2.5	-1.1	54.92

	NODE	Mxx	Myy	Mxy	Mmax	Mmin	ANGLE
	Cent	0.6	1.3	0.9	1.9	0.0	55.19
	161	1.2	2.1	1.0	2.7	0.6	57.77
	513	0.9	2.0	0.9	2.5	0.4	61.81
	521	0.2	0.6	0.8	1.2	-0.5	51.45

		164	0.3	0.5	0.9	1.3	-0.5	47.92

	NODE	Vxx	Vyy
	Cent	0.4	2.7
	161	0.6	2.9
	513	0.6	2.6
	521	0.4	2.6
	164	0.4	2.9

LC		NODE	Fxx	Fyy	Fxy	Fmax	Fmin	ANGLE
RC ENV~1	Max	Cent	0.4	1.5	1.5	2.4	0.3	59.94
		161	0.5	1.7	1.5	2.6	0.5	60.45
		513	0.5	1.4	1.5	2.2	0.4	57.21
		521	0.2	1.4	1.5	2.2	0.2	59.39
		164	0.2	1.7	1.5	2.5	0.2	62.37
	Min	Cent	-2.0	-0.8	-1.9	-0.3	-2.8	-58.41
		161	-2.6	-1.0	-1.9	-0.6	-3.1	-61.94
		513	-2.6	-0.6	-1.9	-0.3	-2.9	-66.19
		521	-1.4	-0.6	-1.9	-0.1	-2.5	-54.55
		164	-1.4	-1.0	-1.9	-0.3	-2.7	-48.01

	NODE	Mxx	Myy	Mxy	Mmax	Mmin	ANGLE
Max	Cent	9.4	2.8	0.8	9.5	2.5	-5.88
	161	14.0	4.7	1.1	14.0	4.5	-0.75
	513	7.8	3.9	0.6	8.1	3.4	-12.52
	521	6.2	1.0	0.6	6.2	1.0	0.34
	164	9.9	2.2	1.1	9.9	2.1	-1.76
Min	Cent	1.1	0.2	-2.0	1.6	-0.1	-33.63
	161	3.2	0.5	-1.9	3.6	0.4	-21.82
	513	-0.9	-0.2	-2.3	1.5	-1.2	-69.41
	521	-1.1	-0.5	-2.2	0.1	-1.8	-65.98
	164	3.3	-0.3	-1.7	3.4	-0.4	-9.44

	NODE	Vxx	Vyy
Max	Cent	9.7	5.3
	161	11.0	5.5
	513	11.0	5.1
	521	9.1	5.1
	164	9.1	5.5
Min	Cent	5.2	-0.2
	161	6.5	-0.3
	513	6.5	-0.2
	521	3.7	-0.2
	164	3.7	-0.3

LC		NODE	Fxx	Fyy	Fxy	Fmax	Fmin	ANGLE
RC ENV~2	Max	Cent	-0.0	0.5	0.1	0.7	-0.1	-73.66
		161	0.1	0.5	0.1	0.7	0.0	-75.39
		513	0.1	0.6	0.1	0.6	0.1	-75.73
		521	-0.1	0.6	0.1	0.7	-0.1	-69.91
		164	-0.1	0.5	0.1	0.8	-0.2	-69.21
	Min	Cent	-1.4	0.3	-0.7	0.3	-1.6	-89.11
		161	-1.9	0.2	-0.7	0.2	-2.0	-88.94
		513	-1.9	0.3	-0.7	0.4	-2.0	-78.61
		521	-1.0	0.3	-0.7	0.4	-1.3	-75.25
		164	-1.0	0.2	-0.7	0.2	-1.2	-88.98

	NODE	Mxx	Myy	Mxy	Mmax	Mmin	ANGLE
Max	Cent	6.9	1.5	-0.1	7.0	1.5	-4.94
	161	10.3	3.3	0.2	10.3	3.3	-0.12
	513	5.6	2.1	-0.3	5.8	1.9	-11.62
	521	4.3	0.4	-0.2	4.4	0.4	-11.01
	164	7.4	1.0	0.2	7.4	1.0	-0.94
Min	Cent	3.1	1.0	-1.3	3.5	0.5	-20.84
	161	5.6	2.1	-1.2	5.8	1.8	-13.52
	513	1.4	1.5	-1.5	2.5	0.3	-46.09
	521	0.8	-0.3	-1.4	1.5	-1.0	-35.03
	164	4.7	0.2	-1.1	4.8	0.0	-9.81

NODE	Vxx	Vyy

Max	Cent	7.3	3.8	
	161	8.3	3.9	
	513	8.3	3.7	
	521	6.8	3.7	
	164	6.8	3.9	
Min	Cent	6.4	2.4	
	161	7.1	2.5	
	513	7.1	2.3	
	521	5.4	2.3	
	164	5.4	2.5	

ELEM	MAT	SEC	LC		NODE	Fxx	Fyy	Fxy	Fmax	Fmin	ANGLE
477	1	1	SX (RS)		Cent	1.1	0.9	0.5	1.5	0.5	39.06
					513	1.1	1.0	0.5	1.6	0.6	41.90
					514	1.1	0.8	0.5	1.5	0.4	34.41
					522	1.1	0.8	0.5	1.4	0.4	36.52
					521	1.1	1.0	0.5	1.5	0.5	44.24

	NODE	Mxx	Myy	Mxy	Mmax	Mmin	ANGLE
	Cent	4.3	0.7	0.1	4.3	0.7	2.32
	513	4.5	0.8	0.2	4.5	0.7	3.49
	514	4.8	1.0	0.1	4.8	1.0	2.23
	522	4.2	0.5	0.1	4.2	0.5	1.15
	521	4.0	0.7	0.2	4.0	0.6	4.19

	NODE	Vxx	Vyy
	Cent	0.6	0.5
	513	0.6	0.1
	514	0.6	1.0
	522	0.6	1.0
	521	0.6	0.1

LC		NODE	Fxx	Fyy	Fxy	Fmax	Fmin	ANGLE
SY (RS)		Cent	0.2	0.6	2.3	2.7	-1.9	47.42
		513	0.3	1.0	2.3	2.9	-1.7	49.26
		514	0.3	0.2	2.3	2.5	-2.0	44.53
		522	0.1	0.2	2.3	2.4	-2.1	45.45
		521	0.1	1.0	2.3	2.8	-1.7	50.15

	NODE	Mxx	Myy	Mxy	Mmax	Mmin	ANGLE
	Cent	0.3	1.2	0.7	1.6	-0.1	60.41
	513	0.7	2.0	0.8	2.3	0.3	65.34
	514	0.5	1.5	0.6	1.7	0.2	64.41
	522	0.1	0.7	0.6	1.1	-0.3	56.21
	521	0.3	0.6	0.8	1.2	-0.4	50.92

	NODE	Vxx	Vyy
	Cent	0.7	2.1
	513	1.1	2.6
	514	1.1	1.7
	522	0.4	1.7
	521	0.4	2.6

LC		NODE	Fxx	Fyy	Fxy	Fmax	Fmin	ANGLE
RC ENV~1	Max	Cent	0.4	1.3	2.1	2.4	0.3	55.17
		513	0.4	1.4	2.1	2.7	0.3	56.64
		514	0.4	1.2	2.1	2.3	0.3	52.77
		522	0.4	1.2	2.1	2.2	0.3	-51.40
		521	0.4	1.4	2.1	2.6	0.3	57.32
	Min	Cent	-2.4	-0.5	-2.5	-0.2	-3.0	-67.06
		513	-2.5	-0.7	-2.5	-0.3	-3.3	-65.39
		514	-2.5	-0.3	-2.5	-0.0	-2.9	-69.49
		522	-2.3	-0.3	-2.5	0.0	-2.8	-68.50
		521	-2.3	-0.7	-2.5	-0.3	-3.2	-64.06

		NODE	Mxx	Myy	Mxy	Mmax	Mmin	ANGLE
	Max	Cent	5.3	2.3	0.1	5.4	1.8	-6.65
		513	7.6	3.8	0.1	8.4	3.6	-20.55

		514	4.2	3.1	-0.2	4.9	2.5	-50.65
		522	3.3	1.2	0.2	3.4	0.9	-9.71
		521	6.3	1.0	0.4	6.3	1.0	-1.29
	Min	Cent	-3.3	-0.1	-2.8	0.5	-3.5	-79.49
		513	-1.4	-0.2	-2.9	1.3	-1.7	-72.45
		514	-5.3	0.2	-3.3	0.8	-5.4	-81.63
		522	-5.0	-0.4	-2.8	0.1	-5.0	-83.68
		521	-1.6	-0.6	-2.5	-0.0	-2.2	-69.46

		NODE	Vxx	Vyy
	Max	Cent	9.9	5.0
		513	10.9	5.1
		514	10.9	5.0
		522	8.9	5.0
		521	8.9	5.1
	Min	Cent	5.3	0.2
		513	5.4	-0.2
		514	5.4	0.5
		522	5.0	0.5
		521	5.0	-0.2

LC		NODE	Fxx	Fyy	Fxy	Fmax	Fmin	ANGLE
RC ENV~2	Max	Cent	-0.1	0.6	0.1	0.7	-0.1	-83.86
		513	-0.1	0.5	0.1	0.5	-0.1	-83.36
		514	-0.1	0.8	0.1	0.8	-0.1	-84.33
		522	-0.1	0.8	0.1	0.8	-0.1	-84.28
		521	-0.1	0.5	0.1	0.5	-0.1	-83.29
	Min	Cent	-1.7	0.3	-0.6	0.4	-1.8	-74.95
		513	-1.7	0.2	-0.6	0.4	-1.9	-74.70
		514	-1.7	0.3	-0.6	0.5	-1.9	-75.74
		522	-1.6	0.3	-0.6	0.5	-1.8	-75.20
		521	-1.6	0.2	-0.6	0.4	-1.8	-78.70

		NODE	Mxx	Myy	Mxy	Mmax	Mmin	ANGLE
	Max	Cent	2.8	1.1	-0.6	3.6	0.7	-29.35
		513	5.5	2.0	-0.6	6.0	1.7	-20.03
		514	1.2	2.2	-0.7	3.5	-0.1	-52.82
		522	0.5	0.5	-0.5	1.7	-0.7	-42.01
		521	4.0	0.4	-0.4	4.3	0.3	-13.65
	Min	Cent	-0.9	0.5	-1.9	1.3	-1.7	-61.56
		513	1.1	1.4	-1.9	2.6	-0.1	-48.36
		514	-2.6	1.0	-2.2	1.5	-3.0	-72.11
		522	-2.7	-0.2	-1.8	0.5	-3.3	-70.56
		521	0.5	-0.3	-1.6	1.4	-1.3	-38.99

		NODE	Vxx	Vyy
	Max	Cent	7.4	3.6
		513	8.1	3.7
		514	8.1	3.6
		522	6.7	3.6
		521	6.7	3.7
	Min	Cent	6.0	2.1
		513	6.4	2.3
		514	6.4	1.8
		522	5.6	1.8
		521	5.6	2.3

ELEM	MAT	SEC	LC		NODE	Fxx	Fyy	Fxy	Fmax	Fmin	ANGLE
478	1	1	SX (RS)		Cent	1.4	0.6	0.5	1.7	0.4	24.47
					514	1.7	0.8	0.5	1.9	0.6	23.31
					515	1.7	0.5	0.5	1.8	0.3	19.00
					523	1.2	0.5	0.5	1.4	0.3	25.87
					522	1.2	0.8	0.5	1.5	0.5	32.79

		NODE	Mxx	Myy	Mxy	Mmax	Mmin	ANGLE
		Cent	4.0	0.7	0.2	4.0	0.7	3.58
		514	4.5	1.0	0.2	4.6	1.0	3.69
		515	3.7	0.9	0.3	3.7	0.9	5.26
		523	3.7	0.7	0.2	3.7	0.6	3.05
		522	4.1	0.5	0.1	4.1	0.5	2.08

	NODE	Vxx	Vyy
	Cent	1.4	0.7
	514	1.7	1.0
	515	1.7	0.5
	523	1.1	0.5
	522	1.1	1.0

LC		NODE	Fxx	Fyy	Fxy	Fmax	Fmin	ANGLE
SY (RS)		Cent	0.3	0.1	2.2	2.4	-2.0	43.54
		514	0.5	0.3	2.2	2.6	-1.8	43.21
		515	0.5	0.1	2.2	2.6	-1.9	42.08
		523	0.1	0.1	2.2	2.3	-2.1	44.87
		522	0.1	0.3	2.2	2.4	-2.0	46.00

	NODE	Mxx	Myy	Mxy	Mmax	Mmin	ANGLE
	Cent	0.2	0.9	0.4	1.1	0.1	66.15
	514	0.4	1.5	0.4	1.7	0.3	70.73
	515	0.4	1.0	0.3	1.1	0.3	69.35
	523	0.1	0.5	0.3	0.7	-0.1	61.08
	522	0.1	0.7	0.5	0.9	-0.2	59.36

	NODE	Vxx	Vyy
	Cent	0.4	1.4
	514	0.6	1.7
	515	0.6	1.1
	523	0.2	1.1
	522	0.2	1.7

LC		NODE	Fxx	Fyy	Fxy	Fmax	Fmin	ANGLE
RC ENV~1	Max	Cent	0.5	1.2	2.1	2.2	0.4	53.71
		514	0.6	1.2	2.1	2.2	0.5	53.31
		515	0.6	1.5	2.1	2.3	0.5	53.75
		523	0.4	1.5	2.1	2.4	0.3	-53.94
		522	0.4	1.2	2.1	2.2	0.3	54.66
	Min	Cent	-3.2	-0.1	-2.4	0.1	-3.3	-75.64
		514	-3.7	-0.4	-2.4	-0.2	-3.8	-75.93
		515	-3.7	0.2	-2.4	0.3	-3.8	-78.28
		523	-2.8	0.2	-2.4	0.4	-2.9	-75.30
		522	-2.8	-0.4	-2.4	-0.2	-2.9	-71.62

		NODE	Mxx	Myy	Mxy	Mmax	Mmin	ANGLE
	Max	Cent	1.6	1.9	-0.2	2.6	1.3	-61.42
		514	3.6	3.1	-0.3	4.5	2.4	-54.00
		515	-0.1	2.3	-0.4	3.0	-0.2	-72.46
		523	0.1	1.2	-0.2	1.4	0.0	-70.44
		522	2.9	1.1	-0.1	3.0	0.8	-11.03
	Min	Cent	-6.4	0.0	-3.1	0.3	-6.6	-83.08
		514	-5.4	0.1	-3.2	0.7	-5.6	-61.37
		515	-7.6	0.2	-3.2	0.4	-8.4	-78.63
		523	-7.4	-0.7	-2.9	-0.1	-8.2	-84.89
		522	-5.3	-0.5	-3.0	0.0	-5.4	-82.78

		NODE	Vxx	Vyy
	Max	Cent	8.6	4.0
		514	9.5	5.0
		515	9.5	3.1
		523	7.7	3.1
		522	7.7	5.0
	Min	Cent	3.3	0.5
		514	3.3	0.5
		515	3.3	0.4
		523	3.3	0.4
		522	3.3	0.5

LC		NODE	Fxx	Fyy	Fxy	Fmax	Fmin	ANGLE
RC ENV~2	Max	Cent	-0.1	0.9	0.1	0.9	-0.1	-86.25
		514	-0.0	0.7	0.1	0.7	-0.1	-86.12
		515	-0.0	1.1	0.1	1.1	-0.1	-82.51

		523	-0.2	1.1	0.1	1.2	-0.2	-81.07
		522	-0.2	0.7	0.1	0.7	-0.2	-85.75
	Min	Cent	-2.3	0.5	-0.5	0.5	-2.4	-79.95
		514	-2.6	0.2	-0.5	0.3	-2.7	-78.98
		515	-2.6	0.6	-0.5	0.6	-2.7	-89.60
		523	-2.0	0.6	-0.5	0.6	-2.0	-89.60
		522	-2.0	0.2	-0.5	0.3	-2.1	-75.77

	NODE	Mxx	Myy	Mxy	Mmax	Mmin	ANGLE
Max	Cent	-1.4	1.1	-0.6	1.8	-2.1	-63.96
	514	0.6	2.1	-0.7	3.2	-0.5	-56.30
	515	-3.1	1.6	-0.6	2.1	-3.6	-74.00
	523	-3.0	0.6	-0.5	1.0	-3.4	-72.46
	522	0.0	0.4	-0.5	1.6	-1.1	-46.11
Min	Cent	-4.1	0.2	-2.1	0.6	-4.6	-76.05
	514	-2.8	1.0	-2.2	1.4	-3.2	-73.58
	515	-5.5	0.4	-2.1	0.8	-6.0	-79.02
	523	-5.4	-0.4	-1.9	0.1	-5.9	-78.26
	522	-3.0	-0.2	-2.0	0.4	-3.6	-71.13

	NODE	Vxx	Vyy
Max	Cent	6.3	2.9
	514	6.9	3.6
	515	6.9	2.2
	523	5.7	2.2
	522	5.7	3.6
Min	Cent	4.2	1.6
	514	4.3	1.8
	515	4.3	1.4
	523	4.1	1.4
	522	4.1	1.8

ELEM	MAT	SEC	LC		NODE	Fxx	Fyy	Fxy	Fmax	Fmin	ANGLE
479	1	1	SX (RS)		Cent	1.5	0.5	0.3	1.5	0.4	14.78
					515	1.6	0.5	0.3	1.7	0.4	13.97
					516	1.6	0.4	0.3	1.7	0.3	12.83
					524	1.3	0.4	0.3	1.4	0.3	15.67
					523	1.3	0.5	0.3	1.4	0.4	17.34

	NODE	Mxx	Myy	Mxy	Mmax	Mmin	ANGLE
	Cent	3.2	0.7	0.2	3.2	0.7	3.79
	515	3.6	0.9	0.2	3.6	0.8	4.31
	516	2.8	0.7	0.2	2.8	0.7	4.93
	524	2.9	0.7	0.1	3.0	0.7	3.19
	523	3.6	0.6	0.1	3.6	0.6	2.86

	NODE	Vxx	Vyy
	Cent	1.8	0.4
	515	1.9	0.5
	516	1.9	0.3
	524	1.7	0.3
	523	1.7	0.5

LC		NODE	Fxx	Fyy	Fxy	Fmax	Fmin	ANGLE
SY (RS)		Cent	0.2	0.1	2.0	2.1	-1.8	43.99
		515	0.3	0.1	2.0	2.2	-1.8	43.43
		516	0.3	0.1	2.0	2.2	-1.8	43.14
		524	0.1	0.1	2.0	2.1	-1.9	44.54
		523	0.1	0.1	2.0	2.1	-1.9	44.83

	NODE	Mxx	Myy	Mxy	Mmax	Mmin	ANGLE
	Cent	0.2	0.8	0.1	0.8	0.2	80.99
	515	0.4	1.1	0.2	1.1	0.3	76.49
	516	0.3	1.0	0.1	1.1	0.3	85.13
	524	0.1	0.5	0.0	0.5	0.1	85.75
	523	0.1	0.5	0.2	0.6	0.1	72.24

	NODE	Vxx	Vyy
	Cent	0.1	1.1

		515	0.2	1.1
		516	0.2	1.1
		524	0.1	1.1
		523	0.1	1.1

LC		NODE	Fxx	Fyy	Fxy	Fmax	Fmin	ANGLE
RC ENV~1	Max	Cent	0.4	1.6	1.9	2.1	0.4	56.41
		515	0.5	1.5	1.9	2.1	0.5	55.91
		516	0.5	1.7	1.9	2.1	0.5	56.23
		524	0.4	1.7	1.9	2.1	0.3	56.90
		523	0.4	1.5	1.9	2.0	0.3	56.58
	Min	Cent	-3.4	0.3	-2.0	0.3	-3.4	-82.79
		515	-3.6	0.2	-2.0	0.2	-3.6	-82.96
		516	-3.6	0.4	-2.0	0.4	-3.6	-83.41
		524	-3.2	0.4	-2.0	0.4	-3.2	-82.61
		523	-3.2	0.2	-2.0	0.2	-3.2	-82.03

		NODE	Mxx	Myy	Mxy	Mmax	Mmin	ANGLE
	Max	Cent	-1.3	1.5	-0.3	1.7	-1.4	-76.04
		515	-0.3	2.3	-0.3	2.7	-0.3	-74.92
		516	-2.5	2.0	-0.2	2.0	-2.5	-87.27
		524	-2.3	1.0	-0.3	1.0	-2.3	-85.49
		523	-0.3	1.1	-0.3	1.2	-0.3	-69.62
	Min	Cent	-8.3	-0.5	-2.8	0.0	-9.1	-83.62
		515	-7.6	0.2	-2.9	0.3	-8.2	-81.60
		516	-9.3	-0.4	-2.7	-0.1	-9.9	-85.10
		524	-9.2	-1.4	-2.7	-0.6	-10.0	-72.75
		523	-7.6	-0.8	-2.9	-0.1	-8.4	-85.20

		NODE	Vxx	Vyy
	Max	Cent	4.7	2.7
		515	4.9	3.1
		516	4.9	2.4
		524	4.6	2.4
		523	4.6	3.1
	Min	Cent	0.6	0.3
		515	0.6	0.4
		516	0.6	0.2
		524	0.7	0.2
		523	0.7	0.4

LC		NODE	Fxx	Fyy	Fxy	Fmax	Fmin	ANGLE
RC ENV~2	Max	Cent	-0.2	1.2	0.1	1.2	-0.2	-86.55
		515	-0.2	1.1	0.1	1.1	-0.2	-86.58
		516	-0.2	1.3	0.1	1.3	-0.2	-86.76
		524	-0.2	1.3	0.1	1.3	-0.2	-86.52
		523	-0.2	1.1	0.1	1.1	-0.2	-86.31
	Min	Cent	-2.4	0.6	-0.2	0.6	-2.4	84.88
		515	-2.5	0.6	-0.2	0.6	-2.5	89.33
		516	-2.5	0.7	-0.2	0.7	-2.5	84.80
		524	-2.3	0.7	-0.2	0.7	-2.3	85.20
		523	-2.3	0.6	-0.2	0.6	-2.3	89.34

		NODE	Mxx	Myy	Mxy	Mmax	Mmin	ANGLE
	Max	Cent	-4.2	0.9	-0.4	1.2	-4.4	-77.62
		515	-3.2	1.6	-0.5	2.0	-3.6	-76.48
		516	-5.2	1.2	-0.4	1.4	-5.2	-80.21
		524	-5.1	0.5	-0.4	0.6	-5.1	-78.91
		523	-3.2	0.6	-0.4	0.9	-3.7	-73.87
	Min	Cent	-6.1	-0.2	-1.9	0.2	-6.6	-79.90
		515	-5.5	0.5	-1.9	0.8	-5.9	-79.96
		516	-6.8	-0.1	-1.8	0.3	-7.2	-76.77
		524	-6.8	-0.8	-1.8	-0.4	-7.2	-74.73
		523	-5.5	-0.4	-1.9	0.1	-6.0	-78.21

		NODE	Vxx	Vyy
	Max	Cent	3.5	2.0
		515	3.6	2.2
		516	3.6	1.7
		524	3.4	1.7
		523	3.4	2.2

	Min	Cent	1.8	1.3
		515	1.8	1.4
		516	1.8	1.2
		524	1.8	1.2
		523	1.8	1.4

ELEM	MAT	SEC	LC		NODE	Fxx	Fyy	Fxy	Fmax	Fmin	ANGLE
480	1	1	SX (RS)		Cent	1.3	0.4	0.3	1.4	0.3	16.59
					516	1.5	0.4	0.3	1.5	0.3	15.33
					517	1.5	0.4	0.3	1.5	0.3	14.98
					525	1.2	0.4	0.3	1.3	0.3	18.05
					524	1.2	0.4	0.3	1.3	0.3	18.55

	NODE	Mxx	Myy	Mxy	Mmax	Mmin	ANGLE
	Cent	2.6	0.6	0.2	2.6	0.6	5.99
	516	2.8	0.7	0.2	2.8	0.7	5.78
	517	2.4	0.6	0.3	2.4	0.5	8.32
	525	2.5	0.6	0.2	2.5	0.6	5.97
	524	2.9	0.7	0.1	2.9	0.6	3.57

	NODE	Vxx	Vyy
	Cent	1.9	0.5
	516	2.0	0.3
	517	2.0	0.6
	525	1.8	0.6
	524	1.8	0.3

LC		NODE	Fxx	Fyy	Fxy	Fmax	Fmin	ANGLE
SY (RS)		Cent	0.1	0.1	1.8	1.9	-1.7	44.51
		516	0.2	0.1	1.8	2.0	-1.7	43.95
		517	0.2	0.1	1.8	2.0	-1.7	44.12
		525	0.1	0.1	1.8	1.9	-1.7	45.10
		524	0.1	0.1	1.8	1.9	-1.7	44.93

	NODE	Mxx	Myy	Mxy	Mmax	Mmin	ANGLE
	Cent	0.2	0.9	0.2	1.0	0.2	76.43
	516	0.4	1.0	0.1	1.0	0.4	84.24
	517	0.2	1.4	0.2	1.5	0.2	81.20
	525	0.0	0.7	0.3	0.9	-0.1	69.20
	524	0.2	0.5	0.2	0.6	0.1	68.65

	NODE	Vxx	Vyy
	Cent	0.2	1.2
	516	0.2	1.1
	517	0.2	1.4
	525	0.1	1.4
	524	0.1	1.1

LC		NODE	Fxx	Fyy	Fxy	Fmax	Fmin	ANGLE
RC ENV~1	Max	Cent	0.3	1.9	1.8	2.0	0.2	57.99
		516	0.4	1.8	1.8	2.0	0.3	57.40
		517	0.4	1.9	1.8	2.1	0.3	57.94
		525	0.2	1.9	1.8	2.0	0.1	58.60
		524	0.2	1.8	1.8	2.0	0.1	58.07
	Min	Cent	-3.4	0.4	-1.8	0.4	-3.4	-83.43
		516	-3.4	0.4	-1.8	0.4	-3.4	-83.61
		517	-3.4	0.5	-1.8	0.5	-3.4	-83.80
		525	-3.3	0.5	-1.8	0.5	-3.3	-83.25
		524	-3.3	0.4	-1.8	0.4	-3.3	-83.02

		NODE	Mxx	Myy	Mxy	Mmax	Mmin	ANGLE
	Max	Cent	-2.7	1.4	-0.1	1.4	-2.7	-89.30
		516	-2.4	2.0	-0.0	2.0	-2.4	-88.36
		517	-2.9	2.2	0.1	2.2	-2.9	89.77
		525	-2.8	0.7	0.0	0.7	-2.8	89.62
		524	-2.2	1.0	-0.2	1.0	-2.3	-86.06
	Min	Cent	-8.7	-1.2	-2.5	-0.5	-9.4	-73.15
		516	-8.9	-0.3	-2.4	-0.0	-9.5	-86.81

517	-8.5	-1.0	-2.3	-0.7	-9.1	-85.82
525	-8.5	-2.3	-2.6	-1.4	-9.4	-70.30
524	-8.8	-1.3	-2.7	-0.5	-9.6	-77.77

	NODE	Vxx	Vyy
Max	Cent	2.0	2.6
	516	2.1	2.4
	517	2.1	2.9
	525	2.0	2.9
	524	2.0	2.4
Min	Cent	-1.8	0.2
	516	-1.9	0.2
	517	-1.9	0.1
	525	-1.7	0.1
	524	-1.7	0.2

LC		NODE	Fxx	Fyy	Fxy	Fmax	Fmin	ANGLE
RC ENV~2	Max	Cent	-0.3	1.3	0.1	1.3	-0.3	-88.75
		516	-0.3	1.3	0.1	1.3	-0.3	-88.74
		517	-0.3	1.4	0.1	1.4	-0.3	-88.78
		525	-0.3	1.4	0.1	1.4	-0.3	-88.76
		524	-0.3	1.3	0.1	1.3	-0.3	-88.72
	Min	Cent	-2.4	0.7	-0.1	0.7	-2.4	86.02
		516	-2.4	0.6	-0.1	0.6	-2.4	85.93
		517	-2.4	0.7	-0.1	0.7	-2.4	86.07
		525	-2.4	0.7	-0.1	0.7	-2.4	86.10
		524	-2.4	0.6	-0.1	0.6	-2.4	85.97

	NODE	Mxx	Myy	Mxy	Mmax	Mmin	ANGLE
Max	Cent	-5.2	0.7	-0.2	0.7	-5.2	-81.28
	516	-5.1	1.2	-0.2	1.4	-5.1	-82.13
	517	-5.3	0.9	-0.1	1.0	-5.3	-83.14
	525	-5.2	0.1	-0.2	0.1	-5.3	-87.21
	524	-5.0	0.5	-0.4	0.6	-5.0	-79.30
Min	Cent	-6.5	-0.7	-1.6	-0.3	-6.8	-75.39
	516	-6.6	-0.0	-1.6	0.3	-6.9	-77.35
	517	-6.4	-0.5	-1.5	-0.2	-6.7	-76.80
	525	-6.3	-1.5	-1.7	-0.9	-6.8	-72.87
	524	-6.5	-0.8	-1.8	-0.3	-7.0	-74.08

	NODE	Vxx	Vyy
Max	Cent	0.8	1.9
	516	0.8	1.7
	517	0.8	2.1
	525	0.8	2.1
	524	0.8	1.7
Min	Cent	-0.9	1.4
	516	-1.0	1.2
	517	-1.0	1.5
	525	-0.8	1.5
	524	-0.8	1.2

ELEM	MAT	SEC	LC		NODE	Fxx	Fyy	Fxy	Fmax	Fmin	ANGLE
481	1	1	SX	(RS)	Cent	1.1	0.5	0.5	1.4	0.2	29.37
					517	1.3	0.4	0.5	1.5	0.1	23.47
					518	1.3	0.6	0.5	1.6	0.4	28.25
					526	0.9	0.6	0.5	1.3	0.3	36.97
					525	0.9	0.4	0.5	1.2	0.1	30.37

	NODE	Mxx	Myy	Mxy	Mmax	Mmin	ANGLE
	Cent	2.5	0.5	0.3	2.5	0.5	8.05
	517	2.5	0.6	0.4	2.5	0.5	10.24
	518	2.7	0.4	0.3	2.8	0.4	7.60
	526	2.3	0.8	0.2	2.3	0.7	6.76
	525	2.6	0.6	0.2	2.6	0.6	6.38

	NODE	Vxx	Vyy
	Cent	1.7	1.0
	517	2.0	0.6
	518	2.0	1.3

526	1.4	1.3				
525	1.4	0.6				

LC		NODE	Fxx	Fyy	Fxy	Fmax	Fmin	ANGLE
SY (RS)		Cent	0.2	0.2	1.8	2.0	-1.7	44.63
		517	0.4	0.1	1.8	2.1	-1.6	42.78
		518	0.4	0.3	1.8	2.2	-1.5	44.75
		526	0.1	0.3	1.8	2.0	-1.7	47.26
		525	0.1	0.1	1.8	1.9	-1.8	45.28

		NODE	Mxx	Myy	Mxy	Mmax	Mmin	ANGLE
		Cent	0.1	1.3	0.5	1.5	-0.1	69.21
		517	0.6	1.3	0.3	1.5	0.5	68.46
		518	0.2	2.3	0.5	2.5	0.1	77.38
		526	0.1	1.0	0.7	1.4	-0.3	60.48
		525	0.2	0.7	0.5	1.0	-0.2	58.81

		NODE	Vxx	Vyy
		Cent	0.8	2.0
		517	1.1	1.4
		518	1.1	2.6
		526	0.4	2.6
		525	0.4	1.4

LC		NODE	Fxx	Fyy	Fxy	Fmax	Fmin	ANGLE
RC ENV~1	Max	Cent	0.1	2.0	1.9	2.2	-0.1	57.95
		517	0.3	2.0	1.9	2.1	0.0	56.40
		518	0.3	2.0	1.9	2.3	0.1	58.09
		526	-0.1	2.0	1.9	2.3	-0.3	60.01
		525	-0.1	2.0	1.9	2.1	-0.3	58.43
	Min	Cent	-3.2	0.3	-1.8	0.4	-3.2	-79.29
		517	-3.2	0.5	-1.8	0.5	-3.2	-80.44
		518	-3.2	0.2	-1.8	0.3	-3.2	-79.53
		526	-3.3	0.2	-1.8	0.3	-3.3	-77.90
		525	-3.3	0.5	-1.8	0.6	-3.3	-79.08

		NODE	Mxx	Myy	Mxy	Mmax	Mmin	ANGLE
	Max	Cent	-2.1	1.5	0.5	1.5	-2.1	85.21
		517	-2.6	2.1	0.4	2.1	-2.7	86.84
		518	-1.2	2.8	0.6	2.9	-1.3	84.49
		526	-1.8	0.2	0.6	0.3	-1.8	82.50
		525	-2.3	0.8	0.3	0.8	-2.3	87.00
	Min	Cent	-7.0	-2.1	-2.2	-1.3	-7.7	-68.74
		517	-8.0	-0.9	-2.0	-0.6	-8.3	-86.74
		518	-6.7	-1.8	-1.9	-1.8	-6.8	-81.32
		526	-6.4	-3.7	-2.5	-2.2	-7.7	-58.74
		525	-7.6	-2.1	-2.6	-1.1	-8.6	-68.49

		NODE	Vxx	Vyy
	Max	Cent	-0.2	3.9
		517	-0.1	2.9
		518	-0.1	4.9
		526	-0.2	4.9
		525	-0.2	2.9
	Min	Cent	-5.3	-0.1
		517	-5.9	0.1
		518	-5.9	-0.3
		526	-4.7	-0.3
		525	-4.7	0.1

LC		NODE	Fxx	Fyy	Fxy	Fmax	Fmin	ANGLE
RC ENV~2	Max	Cent	-0.4	1.5	0.1	1.5	-0.4	-89.53
		517	-0.4	1.4	0.1	1.4	-0.5	-89.52
		518	-0.4	1.5	0.1	1.5	-0.5	-89.53
		526	-0.4	1.5	0.1	1.5	-0.4	-89.53
		525	-0.4	1.4	0.1	1.4	-0.4	-89.52
	Min	Cent	-2.3	0.6	-0.1	0.6	-2.3	85.03
		517	-2.3	0.6	-0.1	0.7	-2.3	85.21
		518	-2.3	0.6	-0.1	0.6	-2.3	85.09

526	-2.3	0.6	-0.1	0.6	-2.3	84.83
525	-2.3	0.6	-0.1	0.7	-2.3	84.96

	NODE	Mxx	Myy	Mxy	Mmax	Mmin	ANGLE
Max	Cent	-4.4	0.3	0.0	0.3	-4.4	89.91
	517	-5.1	1.0	0.1	1.0	-5.1	-85.93
	518	-3.5	0.7	0.2	0.7	-3.5	87.37
	526	-3.7	-0.6	-0.1	-0.6	-3.9	-88.46
	525	-4.8	0.2	-0.2	0.2	-4.9	-87.50
Min	Cent	-5.2	-1.3	-1.4	-0.9	-5.6	-72.11
	517	-6.0	-0.4	-1.3	-0.2	-6.2	-77.80
	518	-4.6	-1.0	-1.2	-0.7	-4.9	-73.09
	526	-4.7	-2.5	-1.6	-1.7	-5.5	-62.55
	525	-5.7	-1.3	-1.7	-0.8	-6.2	-71.34

	NODE	Vxx	Vyy
Max	Cent	-1.7	2.8
	517	-1.8	2.1
	518	-1.8	3.5
	526	-1.5	3.5
	525	-1.5	2.1
Min	Cent	-3.8	1.9
	517	-4.2	1.5
	518	-4.2	2.3
	526	-3.3	2.3
	525	-3.3	1.5

ELEM	MAT	SEC	LC	NODE	Fxx	Fyy	Fxy	Fmax	Fmin	ANGLE
482	1	1	SX (RS)	Cent	0.6	0.5	0.5	1.0	0.0	42.59
				518	0.6	0.5	0.5	1.0	0.1	44.48
				519	0.6	0.4	0.5	1.0	0.0	41.46
				527	0.6	0.4	0.5	1.0	0.0	40.76
				526	0.6	0.5	0.5	1.1	0.1	43.76

NODE	Mxx	Myy	Mxy	Mmax	Mmin	ANGLE
Cent	2.3	0.5	0.1	2.3	0.5	2.32
518	3.0	0.4	0.1	3.0	0.4	3.13
519	2.3	0.5	0.1	2.3	0.5	4.60
527	1.7	0.7	0.2	1.7	0.7	12.80
526	2.4	0.8	0.0	2.4	0.8	1.48

NODE	Vxx	Vyy
Cent	1.3	0.8
518	1.3	1.3
519	1.3	0.2
527	1.4	0.2
526	1.4	1.3

LC	NODE	Fxx	Fyy	Fxy	Fmax	Fmin	ANGLE
SY (RS)	Cent	0.1	0.7	1.7	2.1	-1.3	50.54
	518	0.2	0.3	1.7	1.9	-1.4	45.55
	519	0.2	1.2	1.7	2.5	-1.0	53.27
	527	0.0	1.2	1.7	2.4	-1.1	54.67
	526	0.0	0.3	1.7	1.8	-1.5	47.09

NODE	Mxx	Myy	Mxy	Mmax	Mmin	ANGLE
Cent	0.3	1.8	0.9	2.2	-0.1	64.85
518	0.3	2.2	0.7	2.5	0.0	71.33
519	1.1	3.1	0.8	3.4	0.8	69.98
527	0.5	0.7	0.9	1.5	-0.3	49.33
526	0.1	0.9	0.8	1.4	-0.4	59.16

NODE	Vxx	Vyy
Cent	1.5	3.5
518	2.2	2.6
519	2.2	4.3
527	0.8	4.3
526	0.8	2.6

LC		NODE	Fxx	Fyy	Fxy	Fmax	Fmin	ANGLE
RC ENV~1	Max	Cent	-0.4	2.0	1.7	2.4	-0.5	63.15
		518	-0.4	2.1	1.7	2.1	-0.5	59.64
		519	-0.4	2.0	1.7	2.8	-0.5	64.82
		527	-0.4	2.0	1.7	2.8	-0.5	65.79
		526	-0.4	2.1	1.7	2.1	-0.5	-89.88
	Min	Cent	-3.1	0.1	-1.6	0.4	-3.1	-77.17
		518	-3.1	0.3	-1.6	0.4	-3.1	-76.78
		519	-3.1	-0.4	-1.6	0.5	-3.1	-77.28
		527	-3.1	-0.4	-1.6	0.5	-3.1	-77.53
		526	-3.1	0.3	-1.6	0.4	-3.1	-77.05

		NODE	Mxx	Myy	Mxy	Mmax	Mmin	ANGLE
	Max	Cent	-0.4	1.4	0.9	1.6	-0.4	77.12
		518	-0.4	2.9	1.0	3.0	-0.5	80.49
		519	1.1	3.2	1.0	3.5	0.3	74.99
		527	-0.7	-1.0	0.7	-0.4	-1.0	-17.51
		526	-1.1	0.3	0.7	0.5	-1.1	80.39
	Min	Cent	-5.0	-3.4	-2.2	-1.7	-5.7	-59.01
		518	-6.4	-1.6	-1.7	-1.5	-6.4	-77.90
		519	-3.8	-3.0	-1.8	-2.1	-4.3	-35.94
		527	-4.1	-5.7	-2.7	-2.3	-7.4	-74.94
		526	-5.8	-3.5	-2.5	-1.8	-6.9	-62.10

		NODE	Vxx	Vyy
	Max	Cent	-1.5	6.2
		518	-1.4	4.9
		519	-1.4	7.5
		527	-0.9	7.5
		526	-0.9	4.9
	Min	Cent	-6.9	-0.7
		518	-8.3	-0.3
		519	-8.3	-1.2
		527	-5.4	-1.2
		526	-5.4	-0.3

LC		NODE	Fxx	Fyy	Fxy	Fmax	Fmin	ANGLE
RC ENV~2	Max	Cent	-0.5	1.5	0.1	1.5	-0.5	-89.95
		518	-0.5	1.5	0.1	1.5	-0.5	-89.95
		519	-0.5	1.4	0.1	1.4	-0.5	-89.94
		527	-0.5	1.4	0.1	1.4	-0.5	-89.94
		526	-0.5	1.5	0.1	1.5	-0.5	-89.95
	Min	Cent	-2.2	0.6	-0.0	0.6	-2.2	85.57
		518	-2.2	0.6	-0.0	0.6	-2.2	85.46
		519	-2.2	0.6	-0.0	0.6	-2.2	85.55
		527	-2.2	0.6	-0.0	0.6	-2.2	85.67
		526	-2.2	0.6	-0.0	0.6	-2.2	85.59

		NODE	Mxx	Myy	Mxy	Mmax	Mmin	ANGLE
	Max	Cent	-1.4	-0.3	0.1	-0.3	-1.6	86.54
		518	-2.6	0.8	0.4	0.8	-2.6	84.59
		519	0.6	0.2	0.3	0.6	-0.2	-6.64
		527	-0.8	-1.7	-0.2	-0.6	-2.2	-17.80
		526	-2.6	-0.5	-0.1	-0.5	-2.9	-88.09
	Min	Cent	-2.9	-2.2	-1.4	-1.2	-3.9	-63.30
		518	-3.8	-0.9	-1.0	-0.5	-4.0	-71.82
		519	-1.7	-1.8	-1.1	-0.6	-2.8	-51.80
		527	-2.6	-4.0	-1.7	-1.7	-5.1	-48.38
		526	-3.8	-2.3	-1.6	-1.3	-4.8	-66.69

		NODE	Vxx	Vyy
	Max	Cent	-2.9	4.1
		518	-3.6	3.5
		519	-3.6	4.8
		527	-2.3	4.8
		526	-2.3	3.5
	Min	Cent	-4.9	2.7
		518	-6.0	2.3
		519	-6.0	3.2
		527	-3.9	3.2
		526	-3.9	2.3

ELEM	MAT	SEC	LC		NODE	Fxx	Fyy	Fxy	Fmax	Fmin	ANGLE
483	1	1	SX	(RS)	Cent	0.3	0.2	0.4	0.7	-0.2	43.00
					519	0.5	0.4	0.4	0.9	0.0	42.99
					520	0.5	0.1	0.4	0.8	-0.2	32.28
					528	0.2	0.1	0.4	0.6	-0.3	41.93
					527	0.2	0.4	0.4	0.8	-0.2	53.29

		NODE	Mxx	Myy	Mxy	Mmax	Mmin	ANGLE
		Cent	1.3	0.2	0.7	1.7	-0.1	25.90
		519	2.0	0.5	0.6	2.3	0.3	20.28
		520	2.0	0.4	1.2	2.6	-0.2	28.08
		528	0.0	0.0	0.8	0.8	-0.8	44.68
		527	1.5	0.8	0.3	1.6	0.7	18.79

		NODE	Vxx	Vyy
		Cent	1.8	0.1
		519	1.1	0.2
		520	1.1	0.0
		528	2.9	0.0
		527	2.9	0.2

LC		NODE	Fxx	Fyy	Fxy	Fmax	Fmin	ANGLE
SY	(RS)	Cent	0.4	1.4	0.7	1.7	0.0	63.34
		519	0.7	1.2	0.7	1.7	0.2	54.40
		520	0.7	1.6	0.7	2.0	0.3	62.27
		528	0.1	1.6	0.7	1.9	-0.2	69.47
		527	0.1	1.2	0.7	1.5	-0.3	64.33

		NODE	Mxx	Myy	Mxy	Mmax	Mmin	ANGLE
		Cent	1.2	1.9	0.5	2.2	1.0	62.63
		519	1.7	3.2	0.7	3.5	1.4	68.43
		520	2.3	3.2	0.3	3.3	2.2	73.65
		528	0.6	0.5	0.2	0.8	0.3	37.52
		527	0.4	0.7	0.6	1.2	-0.1	52.44

		NODE	Vxx	Vyy
		Cent	0.8	4.5
		519	1.1	4.3
		520	1.1	4.6
		528	0.5	4.6
		527	0.5	4.3

LC		NODE	Fxx	Fyy	Fxy	Fmax	Fmin	ANGLE
RC ENV~1	Max	Cent	-0.6	2.2	0.7	2.4	-0.7	76.76
		519	-0.3	2.0	0.7	2.2	-0.5	74.03
		520	-0.3	2.4	0.7	2.6	-0.4	76.35
		528	-0.7	2.4	0.7	2.6	-0.7	78.74
		527	-0.7	2.0	0.7	2.1	-0.7	77.15
	Min	Cent	-2.9	-0.6	-0.7	-0.2	-2.9	-59.76
		519	-2.9	-0.3	-0.7	-0.0	-2.9	-67.08
		520	-2.9	-0.8	-0.7	-0.4	-2.9	-60.63
		528	-3.0	-0.8	-0.7	-0.2	-3.0	-49.61
		527	-3.0	-0.3	-0.7	0.1	-3.0	-58.87

		NODE	Mxx	Myy	Mxy	Mmax	Mmin	ANGLE
	Max	Cent	2.4	0.9	0.3	2.8	0.3	-16.26
		519	2.5	3.5	0.6	3.6	0.7	77.91
		520	4.7	3.0	0.7	5.2	2.3	-15.20
		528	1.9	-1.8	0.0	2.5	-2.1	-14.52
		527	0.6	-0.9	0.2	1.1	-0.9	-16.59
	Min	Cent	-2.3	-4.6	-2.9	-1.6	-6.2	-34.80
		519	-2.9	-3.0	-2.4	-1.9	-4.3	-37.41
		520	-2.2	-3.7	-2.9	-1.8	-5.2	-25.61
		528	-1.9	-7.0	-3.5	-1.3	-8.5	2.76
		527	-3.3	-5.5	-2.9	-2.0	-7.1	-61.82

		NODE	Vxx	Vyy

Max	Cent	0.3	7.7
	519	-0.8	7.5
	520	-0.8	8.0
	528	1.7	8.0
	527	1.7	7.5
Min	Cent	-3.6	-1.2
	519	-4.4	-1.2
	520	-4.4	-1.2
	528	-4.0	-1.2
	527	-4.0	-1.2

LC		NODE	Fxx	Fyy	Fxy	Fmax	Fmin	ANGLE
RC ENV~2	Max	Cent	-0.6	1.4	0.1	1.4	-0.6	-89.73
		519	-0.6	1.5	0.1	1.5	-0.6	-89.73
		520	-0.6	1.4	0.1	1.4	-0.6	-89.72
		528	-0.6	1.4	0.1	1.4	-0.6	-89.73
		527	-0.6	1.5	0.1	1.5	-0.6	-89.74
	Min	Cent	-2.1	0.7	-0.0	0.7	-2.1	87.24
		519	-2.0	0.6	-0.0	0.6	-2.0	87.19
		520	-2.0	0.7	-0.0	0.7	-2.0	88.54
		528	-2.1	0.7	-0.0	0.7	-2.1	88.52
		527	-2.1	0.6	-0.0	0.6	-2.1	87.10

		NODE	Mxx	Myy	Mxy	Mmax	Mmin	ANGLE
	Max	Cent	1.4	-0.9	-0.4	1.7	-1.2	-16.50
		519	1.5	0.4	-0.0	1.7	-0.1	-17.81
		520	3.2	-0.1	-0.4	3.5	-0.3	-15.39
		528	1.1	-2.3	-0.7	1.5	-2.7	-14.73
		527	0.2	-1.6	-0.4	0.4	-1.9	-16.86
	Min	Cent	-1.0	-3.1	-1.9	-0.6	-4.2	-45.13
		519	-0.9	-1.6	-1.5	0.0	-2.8	-59.17
		520	0.1	-2.4	-1.9	0.4	-3.4	-34.85
		528	-1.4	-4.9	-2.3	-0.9	-5.8	-28.70
		527	-1.9	-3.8	-1.9	-1.3	-4.9	-51.05

		NODE	Vxx	Vyy
	Max	Cent	-1.5	5.0
		519	-1.9	4.8
		520	-1.9	5.2
		528	-1.1	5.2
		527	-1.1	4.8
	Min	Cent	-2.6	3.3
		519	-3.2	3.2
		520	-3.2	3.4
		528	-2.1	3.4
		527	-2.1	3.2

ELEM	MAT	SEC	LC		NODE	Fxx	Fyy	Fxy	Fmax	Fmin	ANGLE
484	1	1	SX (RS)		Cent	0.7	1.2	0.0	1.2	0.7	88.01
					164	0.7	1.4	0.0	1.4	0.7	88.57
					521	0.7	1.0	0.0	1.0	0.7	86.99
					529	0.7	1.0	0.0	1.0	0.7	86.98
					167	0.7	1.4	0.0	1.4	0.7	88.57

		NODE	Mxx	Myy	Mxy	Mmax	Mmin	ANGLE
		Cent	3.2	1.0	0.0	3.2	1.0	0.16
		164	2.7	1.3	0.1	2.7	1.3	5.56
		521	3.7	0.8	0.1	3.7	0.8	2.66
		529	3.7	0.8	0.1	3.7	0.8	2.52
		167	2.7	1.3	0.1	2.7	1.3	5.26

		NODE	Vxx	Vyy
		Cent	2.1	0.0
		164	2.1	0.0
		521	2.1	0.0
		529	2.1	0.0
		167	2.1	0.0

LC	NODE	Fxx	Fyy	Fxy	Fmax	Fmin	ANGLE

```
-------- ---- ------ ---------- ---------- ---------- ---------- ---------- ----------
      SY (RS)   Cent        0.0        0.0        1.6        1.6       -1.6       45.34
                 164        0.3        0.0        1.6        1.8       -1.5       42.73
                 521        0.3        0.0        1.6        1.8       -1.4       42.78
                 529        0.3        0.0        1.6        1.8       -1.4       42.82
                 167        0.3        0.0        1.6        1.8       -1.5       42.77

                NODE        Mxx        Myy        Mxy       Mmax       Mmin      ANGLE
           ---- ------ ---------- ---------- ---------- ---------- ---------- ----------
                Cent        0.0        0.0        0.9        0.9       -0.9       45.00
                 164        0.4        0.8        0.9        1.5       -0.3       51.81
                 521        0.2        0.6        0.8        1.3       -0.4       51.69
                 529        0.2        0.6        0.8        1.3       -0.4       51.69
                 167        0.4        0.8        0.9        1.5       -0.3       51.81

                NODE        Vxx        Vyy
           ---- ------ ---------- ----------
                Cent        0.0        2.5
                 164        0.4        2.7
                 521        0.4        2.3
                 529        0.4        2.3
                 167        0.4        2.7


      LC        NODE        Fxx        Fyy        Fxy       Fmax       Fmin      ANGLE
-------- ---- ------ ---------- ---------- ---------- ---------- ---------- ----------
RC ENV~1  Max   Cent        0.2        1.6        1.6        1.6        0.2       52.69
                 164        0.2        1.7        1.6        1.8        0.2       50.05
                 521        0.2        1.4        1.6        1.8        0.2       50.27
                 529        0.2        1.4        1.6        1.8        0.2       50.43
                 167        0.2        1.7        1.6        1.7        0.2       50.21
           Min   Cent       -1.5       -0.8       -1.6       -0.8       -1.7      -86.14
                 164       -1.5       -1.0       -1.6       -1.0       -1.9      -81.54
                 521       -1.5       -0.6       -1.6       -0.6       -1.9      -87.31
                 529       -1.5       -0.6       -1.6       -0.6       -1.9      -87.39
                 167       -1.5       -1.0       -1.6       -1.0       -1.9      -82.23

                NODE        Mxx        Myy        Mxy       Mmax       Mmin      ANGLE
           ---- ------ ---------- ---------- ---------- ---------- ---------- ----------
           Max   Cent        7.8        1.7        0.9        8.0        1.7       -7.94
                 164       10.0        2.4        0.8       10.1        2.4       -6.33
                 521        6.3        1.5        0.8        6.3        1.5        0.97
                 529        6.1        0.9        0.9        6.1        0.9        1.57
                 167        9.7        1.9        0.9        9.8        1.9       -6.26
           Min   Cent        1.0       -0.4       -1.7        1.0       -0.9       -0.53
                 164        3.3       -0.1       -1.7        3.3       -0.1       -2.78
                 521       -1.1       -0.1       -1.9       -0.1       -1.2      -79.74
                 529       -1.3       -1.1       -1.8       -0.6       -2.0      -80.64
                 167        3.2       -0.6       -1.7        3.2       -0.9       -1.37

                NODE        Vxx        Vyy
           ---- ------ ---------- ----------
           Max   Cent        9.2        3.4
                 164        9.1        3.6
                 521        9.1        3.2
                 529        9.2        3.2
                 167        9.2        3.6
           Min   Cent        3.8       -1.6
                 164        3.7       -1.8
                 521        3.7       -1.4
                 529        3.8       -1.4
                 167        3.8       -1.8


      LC        NODE        Fxx        Fyy        Fxy       Fmax       Fmin      ANGLE
-------- ---- ------ ---------- ---------- ---------- ---------- ---------- ----------
RC ENV~2  Max   Cent       -0.1        0.5       -0.0        0.5       -0.1      -89.64
                 164       -0.1        0.5       -0.0        0.5       -0.1      -89.74
                 521       -0.1        0.6       -0.0        0.6       -0.1      -89.66
                 529       -0.1        0.6       -0.0        0.6       -0.1      -89.67
                 167       -0.1        0.5       -0.0        0.5       -0.1      -89.74
           Min   Cent       -1.0        0.3       -0.0        0.3       -1.0      -89.66
                 164       -1.0        0.2       -0.0        0.2       -1.0      -88.87
                 521       -1.0        0.3       -0.0        0.3       -1.0      -89.61
                 529       -1.0        0.3       -0.0        0.3       -1.0      -89.62
                 167       -1.0        0.2       -0.0        0.2       -1.0      -88.92

                NODE        Mxx        Myy        Mxy       Mmax       Mmin      ANGLE
           ---- ------ ---------- ---------- ---------- ---------- ---------- ----------
```

Max	Cent	5.8	0.7	-0.0	5.9	0.7	-6.66
	164	7.5	1.3	-0.0	7.5	1.2	-5.24
	521	4.3	0.7	-0.0	4.5	0.7	-9.18
	529	4.1	0.2	0.0	4.2	0.2	-8.78
	167	7.2	0.7	0.0	7.3	0.7	-5.13
Min	Cent	2.7	-0.1	-1.1	2.8	-0.4	-13.37
	164	4.7	0.6	-1.1	4.9	0.3	-9.21
	521	0.9	0.1	-1.2	1.4	-0.6	-34.52
	529	0.6	-0.7	-1.1	0.8	-1.2	-26.00
	167	4.5	-0.2	-1.1	4.6	-0.4	-6.58

	NODE	Vxx	Vyy
Max	Cent	6.9	1.3
	164	6.8	1.4
	521	6.8	1.3
	529	6.9	1.3
	167	6.9	1.4
Min	Cent	5.4	0.9
	164	5.4	0.9
	521	5.4	0.9
	529	5.5	0.9
	167	5.5	0.9

ELEM	MAT	SEC	LC	NODE	Fxx	Fyy	Fxy	Fmax	Fmin	ANGLE
485	1	1	SX (RS)	Cent	1.1	0.9	0.0	1.1	0.9	8.31
				521	1.1	1.1	0.0	1.1	1.0	40.39
				522	1.1	0.8	0.0	1.1	0.8	4.39
				530	1.1	0.8	0.0	1.1	0.8	4.39
				529	1.1	1.1	0.0	1.1	1.0	40.57

NODE	Mxx	Myy	Mxy	Mmax	Mmin	ANGLE
Cent	4.1	0.7	0.0	4.1	0.7	0.10
521	4.0	0.8	0.1	4.0	0.8	0.98
522	4.2	0.6	0.1	4.2	0.6	0.85
530	4.2	0.6	0.0	4.2	0.6	0.77
529	4.0	0.8	0.0	4.0	0.8	0.87

NODE	Vxx	Vyy
Cent	0.6	0.0
521	0.6	0.0
522	0.6	0.0
530	0.6	0.0
529	0.6	0.0

LC	NODE	Fxx	Fyy	Fxy	Fmax	Fmin	ANGLE
SY (RS)	Cent	0.0	0.0	2.1	2.2	-2.1	45.28
	521	0.1	0.0	2.1	2.2	-2.0	44.39
	522	0.1	0.0	2.1	2.2	-2.0	44.43
	530	0.1	0.0	2.1	2.2	-2.0	44.44
	529	0.1	0.0	2.1	2.2	-2.0	44.40

NODE	Mxx	Myy	Mxy	Mmax	Mmin	ANGLE
Cent	0.0	0.0	0.7	0.7	-0.7	45.00
521	0.3	0.7	0.8	1.3	-0.3	51.50
522	0.2	0.5	0.7	1.0	-0.4	51.36
530	0.2	0.5	0.7	1.0	-0.4	51.36
529	0.3	0.7	0.8	1.3	-0.3	51.50

NODE	Vxx	Vyy
Cent	0.0	2.0
521	0.4	2.3
522	0.4	1.8
530	0.4	1.8
529	0.4	2.3

LC		NODE	Fxx	Fyy	Fxy	Fmax	Fmin	ANGLE
RC ENV~1	Max	Cent	0.4	1.3	2.1	2.1	0.4	52.68
		521	0.4	1.4	2.1	2.1	0.4	51.39

		522	0.4	1.2	2.1	2.2	0.4	52.28
		530	0.4	1.2	2.1	2.2	0.4	52.32
		529	0.4	1.4	2.1	2.1	0.4	51.44
	Min	Cent	-2.3	-0.5	-2.1	-0.5	-2.4	-88.17
		521	-2.3	-0.7	-2.1	-0.7	-2.5	-87.80
		522	-2.3	-0.3	-2.1	-0.3	-2.4	-88.42
		530	-2.3	-0.3	-2.1	-0.3	-2.4	-88.43
		529	-2.3	-0.7	-2.1	-0.7	-2.5	-87.81

	NODE	Mxx	Myy	Mxy	Mmax	Mmin	ANGLE
Max	Cent	4.7	1.0	0.6	4.7	1.0	-1.23
	521	6.4	1.5	0.6	6.4	1.5	-1.34
	522	3.4	1.1	0.5	3.4	1.1	-4.22
	530	3.1	0.6	0.7	3.1	0.6	1.02
	529	6.1	0.9	0.8	6.2	0.9	1.04
Min	Cent	-3.4	-0.7	-2.0	-0.4	-3.4	-88.29
	521	-1.7	-0.2	-2.1	-0.2	-1.7	-81.37
	522	-5.0	-0.3	-2.3	-0.0	-5.0	-86.87
	530	-5.2	-1.3	-2.0	-0.6	-5.2	-89.36
	529	-1.9	-1.2	-1.8	-0.7	-2.2	-89.94

	NODE	Vxx	Vyy
Max	Cent	8.9	3.0
	521	8.9	3.2
	522	8.9	2.7
	530	8.9	2.7
	529	8.9	3.2
Min	Cent	5.1	-1.1
	521	5.0	-1.4
	522	5.0	-0.8
	530	5.1	-0.8
	529	5.1	-1.4

LC		NODE	Fxx	Fyy	Fxy	Fmax	Fmin	ANGLE
RC ENV~2	Max	Cent	-0.1	0.6	-0.0	0.6	-0.1	-89.29
		521	-0.1	0.5	-0.0	0.5	-0.1	-88.80
		522	-0.1	0.8	-0.0	0.8	-0.1	-89.34
		530	-0.1	0.8	-0.0	0.8	-0.1	-89.34
		529	-0.1	0.5	-0.0	0.5	-0.1	-88.81
	Min	Cent	-1.6	0.2	-0.0	0.2	-1.6	-89.26
		521	-1.6	0.2	-0.0	0.2	-1.6	-89.22
		522	-1.6	0.3	-0.0	0.3	-1.6	-89.29
		530	-1.7	0.3	-0.0	0.3	-1.7	-89.29
		529	-1.7	0.2	-0.0	0.2	-1.7	-89.22

	NODE	Mxx	Myy	Mxy	Mmax	Mmin	ANGLE
Max	Cent	2.2	0.3	-0.1	2.4	0.3	-18.22
	521	4.1	0.6	-0.2	4.3	0.6	-12.52
	522	0.5	0.6	-0.2	1.4	-0.5	-42.25
	530	0.2	0.0	0.0	0.7	-0.7	-35.00
	529	3.8	0.1	0.1	3.9	0.1	-8.36
Min	Cent	-1.2	-0.4	-1.3	0.3	-1.9	-62.39
	521	0.6	-0.0	-1.4	1.3	-0.9	-39.48
	522	-2.7	-0.1	-1.5	0.4	-3.1	-73.36
	530	-3.1	-0.8	-1.3	-0.3	-3.4	-75.04
	529	0.2	-0.7	-1.1	0.6	-1.3	-31.27

	NODE	Vxx	Vyy
Max	Cent	6.7	1.3
	521	6.7	1.3
	522	6.7	1.3
	530	6.7	1.3
	529	6.7	1.3
Min	Cent	5.7	0.9
	521	5.6	0.9
	522	5.6	0.9
	530	5.7	0.9
	529	5.7	0.9

ELEM	MAT	SEC	LC		NODE	Fxx	Fyy	Fxy	Fmax	Fmin	ANGLE
486	1	1	SX (RS)		Cent	1.2	0.7	0.0	1.2	0.7	2.54

522	1.2	0.8	0.0	1.2	0.8	3.24
523	1.2	0.6	0.0	1.2	0.6	2.09
531	1.2	0.6	0.0	1.2	0.6	2.09
530	1.2	0.8	0.0	1.2	0.8	3.24

NODE	Mxx	Myy	Mxy	Mmax	Mmin	ANGLE
Cent	3.9	0.6	0.0	3.9	0.6	0.07
522	4.2	0.6	0.0	4.2	0.6	0.71
523	3.7	0.6	0.0	3.7	0.6	0.83
531	3.7	0.6	0.0	3.7	0.6	0.86
530	4.2	0.6	0.0	4.2	0.6	0.75

NODE	Vxx	Vyy
Cent	1.1	0.0
522	1.1	0.0
523	1.1	0.0
531	1.1	0.0
530	1.1	0.0

LC		NODE	Fxx	Fyy	Fxy	Fmax	Fmin	ANGLE
SY (RS)		Cent	0.0	0.0	2.2	2.2	-2.2	45.30
		522	0.1	0.0	2.2	2.3	-2.1	44.68
		523	0.1	0.1	2.2	2.3	-2.1	44.70
		531	0.1	0.1	2.2	2.3	-2.1	44.66
		530	0.1	0.0	2.2	2.3	-2.1	44.64

NODE	Mxx	Myy	Mxy	Mmax	Mmin	ANGLE
Cent	0.0	0.0	0.4	0.4	-0.4	45.00
522	0.2	0.5	0.5	0.9	-0.2	53.20
523	0.2	0.3	0.4	0.6	-0.1	51.20
531	0.2	0.3	0.4	0.6	-0.1	51.20
530	0.2	0.5	0.5	0.9	-0.2	53.20

NODE	Vxx	Vyy
Cent	0.0	1.6
522	0.2	1.8
523	0.2	1.3
531	0.2	1.3
530	0.2	1.8

LC		NODE	Fxx	Fyy	Fxy	Fmax	Fmin	ANGLE
RC ENV~1	Max	Cent	0.4	1.2	2.2	2.2	0.4	54.05
		522	0.4	1.3	2.2	2.1	0.4	52.99
		523	0.4	1.3	2.2	2.3	0.4	53.99
		531	0.4	1.3	2.2	2.3	0.4	53.95
		530	0.4	1.3	2.2	2.2	0.4	52.96
	Min	Cent	-2.8	-0.1	-2.2	-0.1	-2.8	-88.76
		522	-2.8	-0.3	-2.2	-0.3	-2.8	-88.62
		523	-2.8	0.1	-2.2	0.1	-2.8	-88.88
		531	-2.8	0.1	-2.2	0.1	-2.8	-88.88
		530	-2.8	-0.3	-2.2	-0.3	-2.8	-88.62

NODE	Mxx	Myy	Mxy	Mmax	Mmin	ANGLE
Max Cent	1.4	0.8	0.2	1.5	0.8	-17.44
522	3.0	1.1	0.2	3.0	1.0	-6.73
523	0.1	1.1	0.0	1.2	0.0	-75.28
531	-0.2	0.6	0.2	0.6	-0.2	-83.58
530	2.7	0.5	0.5	2.7	0.5	-0.53
Min Cent	-6.5	-1.0	-2.4	-0.4	-6.8	-88.04
522	-5.3	-0.4	-2.5	-0.1	-5.3	-86.52
523	-7.4	-0.7	-2.7	-0.1	-8.2	-86.95
531	-7.9	-1.6	-2.4	-0.8	-8.6	-77.53
530	-5.6	-1.4	-2.2	-0.6	-5.6	-88.67

NODE	Vxx	Vyy
Max Cent	7.7	2.5
522	7.7	2.7
523	7.7	2.3
531	7.7	2.3

		530	7.7	2.7
	Min	Cent	3.3	-0.6
		522	3.3	-0.8
		523	3.3	-0.4
		531	3.3	-0.4
		530	3.3	-0.8

LC		NODE	Fxx	Fyy	Fxy	Fmax	Fmin	ANGLE
RC ENV~2	Max	Cent	-0.2	0.8	-0.0	0.8	-0.2	-89.43
		522	-0.2	0.7	-0.0	0.7	-0.2	-89.39
		523	-0.2	1.0	-0.0	1.0	-0.2	-89.46
		531	-0.2	1.0	-0.0	1.0	-0.2	-89.46
		530	-0.2	0.7	-0.0	0.7	-0.2	-89.39
	Min	Cent	-2.0	0.4	-0.0	0.4	-2.0	-89.40
		522	-2.0	0.3	-0.0	0.3	-2.0	-89.36
		523	-2.0	0.5	-0.0	0.5	-2.0	-89.44
		531	-2.0	0.5	-0.0	0.5	-2.0	-89.44
		530	-2.0	0.3	-0.0	0.3	-2.0	-89.36

		NODE	Mxx	Myy	Mxy	Mmax	Mmin	ANGLE
	Max	Cent	-1.7	0.3	-0.2	0.5	-2.1	-65.79
		522	0.0	0.5	-0.3	1.3	-0.9	-51.68
		523	-3.0	0.6	-0.3	0.8	-3.3	-74.93
		531	-3.3	0.1	-0.1	0.1	-3.6	-88.25
		530	-0.3	-0.0	-0.0	0.4	-1.1	-44.26
	Min	Cent	-4.3	-0.6	-1.5	-0.1	-4.7	-76.97
		522	-3.0	-0.1	-1.6	0.3	-3.4	-73.63
		523	-5.4	-0.3	-1.7	0.1	-5.8	-78.69
		531	-5.7	-1.0	-1.5	-0.6	-6.1	-79.30
		530	-3.3	-0.9	-1.4	-0.4	-3.7	-74.18

		NODE	Vxx	Vyy
	Max	Cent	5.7	1.2
		522	5.7	1.3
		523	5.7	1.2
		531	5.7	1.2
		530	5.7	1.3
	Min	Cent	4.1	0.9
		522	4.1	0.9
		523	4.1	0.9
		531	4.1	0.9
		530	4.1	0.9

ELEM	MAT	SEC	LC		NODE	Fxx	Fyy	Fxy	Fmax	Fmin	ANGLE
487	1	1	SX (RS)		Cent	1.4	0.5	0.0	1.4	0.5	1.65
					523	1.4	0.6	0.0	1.4	0.6	1.82
					524	1.4	0.4	0.0	1.4	0.4	1.54
					532	1.4	0.4	0.0	1.4	0.4	1.54
					531	1.4	0.6	0.0	1.4	0.6	1.82

	NODE	Mxx	Myy	Mxy	Mmax	Mmin	ANGLE
	Cent	3.2	0.6	0.0	3.2	0.6	0.04
	523	3.6	0.6	0.0	3.6	0.6	0.87
	524	2.9	0.7	0.0	2.9	0.6	1.13
	532	2.9	0.7	0.0	2.9	0.6	1.15
	531	3.6	0.6	0.0	3.6	0.6	0.89

	NODE	Vxx	Vyy
	Cent	1.7	0.0
	523	1.7	0.0
	524	1.7	0.0
	532	1.7	0.0
	531	1.7	0.0

LC		NODE	Fxx	Fyy	Fxy	Fmax	Fmin	ANGLE
SY (RS)		Cent	0.0	0.1	2.0	2.1	-2.0	45.34
		523	0.1	0.1	2.0	2.1	-1.9	44.32
		524	0.1	0.1	2.0	2.1	-1.9	44.34
		532	0.2	0.1	2.0	2.1	-1.9	44.28

		531	0.2	0.1	2.0	2.1	-1.9	44.26

	NODE	Mxx	Myy	Mxy	Mmax	Mmin	ANGLE
	Cent	0.0	0.0	0.1	0.1	-0.1	44.99
	523	0.2	0.3	0.2	0.4	0.1	57.71
	524	0.1	0.3	0.1	0.3	0.1	72.18
	532	0.1	0.3	0.1	0.3	0.1	72.18
	531	0.2	0.3	0.2	0.4	0.1	57.71

	NODE	Vxx	Vyy
	Cent	0.0	1.3
	523	0.1	1.3
	524	0.1	1.3
	532	0.1	1.3
	531	0.1	1.3

LC		NODE	Fxx	Fyy	Fxy	Fmax	Fmin	ANGLE
RC ENV~1	Max	Cent	0.4	1.4	2.0	2.1	0.4	56.40
		523	0.4	1.3	2.0	2.1	0.4	55.02
		524	0.4	1.7	2.0	2.2	0.4	56.02
		532	0.4	1.7	2.0	2.2	0.4	55.96
		531	0.4	1.3	2.0	2.1	0.4	54.96
	Min	Cent	-3.2	0.2	-2.0	0.2	-3.2	-89.21
		523	-3.3	0.0	-2.0	0.0	-3.3	-89.16
		524	-3.3	0.3	-2.0	0.3	-3.3	-89.25
		532	-3.2	0.3	-2.0	0.3	-3.2	-89.25
		531	-3.2	0.0	-2.0	0.0	-3.2	-89.16

		NODE	Mxx	Myy	Mxy	Mmax	Mmin	ANGLE
	Max	Cent	-1.4	0.8	-0.3	0.8	-1.5	-80.99
		523	-0.3	1.1	-0.2	1.1	-0.3	-78.08
		524	-2.3	1.0	-0.4	1.0	-2.3	-83.42
		532	-2.6	0.4	-0.3	0.5	-2.6	-83.86
		531	-0.6	0.5	-0.1	0.6	-0.6	-77.85
	Min	Cent	-8.6	-1.4	-2.8	-0.6	-9.5	-76.58
		523	-7.6	-0.7	-2.7	-0.1	-8.3	-86.98
		524	-9.2	-1.3	-2.9	-0.4	-10.1	-77.21
		532	-9.8	-2.1	-2.9	-1.2	-10.7	-76.31
		531	-8.1	-1.6	-2.7	-0.7	-9.0	-75.85

		NODE	Vxx	Vyy
	Max	Cent	4.6	2.2
		523	4.6	2.3
		524	4.6	2.2
		532	4.6	2.2
		531	4.6	2.3
	Min	Cent	0.7	-0.4
		523	0.7	-0.4
		524	0.7	-0.3
		532	0.7	-0.3
		531	0.7	-0.4

LC		NODE	Fxx	Fyy	Fxy	Fmax	Fmin	ANGLE
RC ENV~2	Max	Cent	-0.2	1.0	-0.0	1.0	-0.2	-89.69
		523	-0.2	0.9	-0.0	0.9	-0.2	-89.67
		524	-0.2	1.2	-0.0	1.2	-0.2	-89.79
		532	-0.2	1.2	-0.0	1.2	-0.2	-89.79
		531	-0.2	0.9	-0.0	0.9	-0.2	-89.67
	Min	Cent	-2.3	0.6	-0.0	0.6	-2.3	-89.57
		523	-2.3	0.5	-0.0	0.5	-2.3	-89.67
		524	-2.3	0.7	-0.0	0.7	-2.3	-89.15
		532	-2.3	0.7	-0.0	0.7	-2.3	-89.15
		531	-2.3	0.5	-0.0	0.5	-2.3	-89.67

	NODE	Mxx	Myy	Mxy	Mmax	Mmin	ANGLE
Max	Cent	-4.4	0.2	-0.4	0.3	-4.5	-77.63
	523	-3.2	0.6	-0.3	0.7	-3.6	-74.08
	524	-5.1	0.5	-0.4	0.6	-5.1	-78.48
	532	-5.4	-0.1	-0.4	-0.1	-5.4	-78.98
	531	-3.6	0.0	-0.3	0.0	-3.9	-74.33

Min	Cent	-6.3	-0.9	-1.8	-0.4	-6.8	-78.27
	523	-5.5	-0.3	-1.8	0.1	-5.9	-78.51
	524	-6.8	-0.8	-1.9	-0.2	-7.3	-73.73
	532	-7.2	-1.4	-1.9	-0.8	-7.7	-72.91
	531	-5.9	-1.0	-1.8	-0.5	-6.4	-77.59

	NODE	Vxx	Vyy
Max	Cent	3.4	1.1
	523	3.4	1.2
	524	3.4	1.1
	532	3.4	1.1
	531	3.4	1.2
Min	Cent	1.8	0.9
	523	1.8	0.9
	524	1.8	0.9
	532	1.8	0.9
	531	1.8	0.9

ELEM	MAT	SEC	LC		NODE	Fxx	Fyy	Fxy	Fmax	Fmin	ANGLE
488	1	1	SX (RS)		Cent	1.2	0.5	0.0	1.2	0.5	1.80
					524	1.2	0.4	0.0	1.2	0.4	1.70
					525	1.2	0.5	0.0	1.2	0.5	1.94
					533	1.2	0.5	0.0	1.2	0.5	1.94
					532	1.2	0.4	0.0	1.2	0.4	1.70

	NODE	Mxx	Myy	Mxy	Mmax	Mmin	ANGLE
	Cent	2.6	0.6	0.0	2.6	0.6	0.02
	524	2.9	0.6	0.1	2.9	0.6	1.43
	525	2.5	0.6	0.1	2.5	0.6	1.75
	533	2.5	0.6	0.1	2.5	0.6	1.75
	532	2.9	0.6	0.1	2.9	0.6	1.44

	NODE	Vxx	Vyy
	Cent	1.8	0.0
	524	1.8	0.0
	525	1.8	0.0
	533	1.8	0.0
	532	1.8	0.0

LC		NODE	Fxx	Fyy	Fxy	Fmax	Fmin	ANGLE
SY (RS)		Cent	0.0	0.1	1.9	1.9	-1.9	45.38
		524	0.1	0.1	1.9	2.0	-1.8	44.60
		525	0.1	0.1	1.9	2.0	-1.8	44.61
		533	0.1	0.1	1.9	2.0	-1.8	44.55
		532	0.1	0.1	1.9	2.0	-1.8	44.54

	NODE	Mxx	Myy	Mxy	Mmax	Mmin	ANGLE
	Cent	0.0	0.0	0.3	0.3	-0.3	45.00
	524	0.2	0.3	0.2	0.5	0.0	51.01
	525	0.1	0.5	0.4	0.7	-0.2	56.80
	533	0.1	0.5	0.4	0.7	-0.2	56.80
	532	0.2	0.3	0.2	0.5	0.0	51.01

	NODE	Vxx	Vyy
	Cent	0.0	1.5
	524	0.1	1.3
	525	0.1	1.8
	533	0.1	1.8
	532	0.1	1.3

LC		NODE	Fxx	Fyy	Fxy	Fmax	Fmin	ANGLE
RC ENV~1	Max	Cent	0.2	1.8	1.9	2.0	0.2	57.99
		524	0.2	1.7	1.9	2.0	0.2	57.14
		525	0.2	1.9	1.9	2.1	0.2	57.57
		533	0.2	1.9	1.9	2.1	0.2	57.52
		532	0.2	1.7	1.9	2.0	0.2	57.09
	Min	Cent	-3.3	0.3	-1.9	0.3	-3.3	-89.42
		524	-3.3	0.3	-1.9	0.3	-3.3	-89.42

		525	-3.3	0.3	-1.9	0.3	-3.3	-89.41
		533	-3.3	0.3	-1.9	0.3	-3.3	-89.41
		532	-3.3	0.3	-1.9	0.3	-3.3	-89.42

	NODE	Mxx	Myy	Mxy	Mmax	Mmin	ANGLE
Max	Cent	-2.7	0.5	-0.2	0.6	-2.8	-80.87
	524	-2.2	1.0	-0.2	1.0	-2.3	-83.71
	525	-2.8	0.6	-0.1	0.6	-2.9	-82.57
	533	-3.1	0.0	-0.2	0.1	-3.2	-79.75
	532	-2.6	0.4	-0.3	0.5	-2.6	-80.72
Min	Cent	-9.0	-2.1	-3.2	-0.9	-10.2	-73.89
	524	-8.8	-1.2	-2.9	-0.3	-9.7	-76.55
	525	-8.5	-2.2	-3.1	-1.0	-9.7	-73.57
	533	-9.1	-3.0	-3.5	-1.5	-10.6	-71.10
	532	-9.5	-2.1	-3.3	-0.9	-10.7	-74.18

	NODE	Vxx	Vyy
Max	Cent	2.0	2.4
	524	2.0	2.2
	525	2.0	2.7
	533	2.0	2.7
	532	2.0	2.2
Min	Cent	-1.7	-0.6
	524	-1.7	-0.3
	525	-1.7	-0.9
	533	-1.7	-0.9
	532	-1.7	-0.3

LC		NODE	Fxx	Fyy	Fxy	Fmax	Fmin	ANGLE
RC ENV~2	Max	Cent	-0.3	1.3	-0.0	1.3	-0.3	-89.91
		524	-0.3	1.2	-0.0	1.2	-0.3	-89.91
		525	-0.3	1.4	-0.0	1.4	-0.3	-89.91
		533	-0.3	1.4	-0.0	1.4	-0.3	-89.91
		532	-0.3	1.2	-0.0	1.2	-0.3	-89.91
	Min	Cent	-2.4	0.6	-0.0	0.6	-2.4	-89.66
		524	-2.4	0.6	-0.0	0.6	-2.4	-89.66
		525	-2.4	0.6	-0.0	0.6	-2.4	-89.66
		533	-2.4	0.6	-0.0	0.6	-2.4	-89.66
		532	-2.4	0.6	-0.0	0.6	-2.4	-89.66

	NODE	Mxx	Myy	Mxy	Mmax	Mmin	ANGLE
Max	Cent	-5.3	-0.0	-0.5	0.1	-5.3	-76.62
	524	-5.0	0.5	-0.4	0.6	-5.0	-78.69
	525	-5.3	0.1	-0.5	0.1	-5.3	-84.62
	533	-5.6	-0.5	-0.6	-0.4	-5.6	-74.48
	532	-5.3	-0.1	-0.6	0.1	-5.4	-76.57
Min	Cent	-6.6	-1.4	-2.1	-0.6	-7.4	-75.85
	524	-6.5	-0.7	-1.9	-0.2	-7.0	-78.30
	525	-6.3	-1.4	-2.0	-0.7	-7.1	-70.10
	533	-6.8	-2.0	-2.3	-1.1	-7.7	-73.23
	532	-7.0	-1.4	-2.2	-0.7	-7.7	-75.98

	NODE	Vxx	Vyy
Max	Cent	0.7	1.0
	524	0.8	1.1
	525	0.8	0.9
	533	0.7	0.9
	532	0.7	1.1
Min	Cent	-0.9	0.9
	524	-0.8	0.9
	525	-0.8	0.9
	533	-0.9	0.9
	532	-0.9	0.9

ELEM	MAT	SEC	LC		NODE	Fxx	Fyy	Fxy	Fmax	Fmin	ANGLE
489	1	1	SX	(RS)	Cent	0.9	0.5	0.0	0.9	0.5	3.37
					525	0.9	0.5	0.0	0.9	0.5	3.10
					526	0.9	0.6	0.0	0.9	0.6	3.71
					534	0.9	0.6	0.0	0.9	0.6	3.71
					533	0.9	0.5	0.0	0.9	0.5	3.10

	NODE	Mxx	Myy	Mxy	Mmax	Mmin	ANGLE
	Cent	2.4	0.6	0.0	2.4	0.6	0.03
	525	2.6	0.6	0.1	2.6	0.6	1.83
	526	2.3	0.6	0.1	2.3	0.6	2.16
	534	2.3	0.6	0.1	2.3	0.6	2.16
	533	2.6	0.6	0.1	2.6	0.6	1.83

	NODE	Vxx	Vyy
	Cent	1.4	0.0
	525	1.4	0.0
	526	1.4	0.0
	534	1.4	0.0
	533	1.4	0.0

LC		NODE	Fxx	Fyy	Fxy	Fmax	Fmin	ANGLE
SY (RS)		Cent	0.0	0.1	1.8	1.9	-1.8	45.40
		525	0.1	0.1	1.8	1.9	-1.8	44.98
		526	0.1	0.1	1.8	1.9	-1.8	44.99
		534	0.1	0.1	1.8	1.9	-1.8	44.92
		533	0.1	0.1	1.8	1.9	-1.8	44.91

	NODE	Mxx	Myy	Mxy	Mmax	Mmin	ANGLE
	Cent	0.0	0.0	0.7	0.7	-0.7	45.00
	525	0.2	0.4	0.6	0.9	-0.3	49.88
	526	0.1	0.7	0.8	1.3	-0.5	56.47
	534	0.1	0.7	0.8	1.3	-0.5	56.47
	533	0.2	0.4	0.6	0.9	-0.3	49.88

	NODE	Vxx	Vyy
	Cent	0.0	2.3
	525	0.4	1.8
	526	0.4	2.8
	534	0.4	2.8
	533	0.4	1.8

LC		NODE	Fxx	Fyy	Fxy	Fmax	Fmin	ANGLE
RC ENV~1	Max	Cent	-0.1	2.0	1.8	2.0	-0.1	58.65
		525	-0.1	1.9	1.8	2.0	-0.1	58.23
		526	-0.1	2.0	1.8	2.0	-0.1	-89.97
		534	-0.1	2.0	1.8	2.0	-0.1	-89.97
		533	-0.1	1.9	1.8	2.0	-0.1	58.19
	Min	Cent	-3.3	0.3	-1.8	0.3	-3.3	-89.49
		525	-3.3	0.3	-1.8	0.3	-3.3	-89.49
		526	-3.3	0.3	-1.8	0.3	-3.3	-89.48
		534	-3.3	0.3	-1.8	0.3	-3.3	-89.48
		533	-3.3	0.3	-1.8	0.3	-3.3	-89.49

	NODE	Mxx	Myy	Mxy	Mmax	Mmin	ANGLE
Max	Cent	-2.2	-0.0	0.0	0.2	-2.4	-73.77
	525	-2.3	0.6	0.1	0.7	-2.4	-81.79
	526	-1.8	0.0	0.2	0.1	-1.9	-74.40
	534	-2.1	-0.5	-0.1	-0.2	-2.5	-65.58
	533	-2.6	0.1	-0.2	0.3	-2.9	-75.21
Min	Cent	-7.2	-3.2	-3.6	-1.3	-9.3	-65.60
	525	-7.6	-2.1	-3.1	-0.8	-9.0	-72.02
	526	-6.4	-3.6	-3.3	-1.6	-8.5	-62.18
	534	-6.7	-4.2	-4.1	-1.7	-9.7	-78.92
	533	-8.2	-2.8	-3.9	-1.1	-10.2	-68.03

	NODE	Vxx	Vyy
Max	Cent	-0.3	3.1
	525	-0.2	2.7
	526	-0.2	3.6
	534	-0.3	3.6
	533	-0.3	2.7
Min	Cent	-4.8	-1.4
	525	-4.7	-0.9
	526	-4.7	-1.9
	534	-4.9	-1.9

		533	-4.9	-0.9			

LC		NODE	Fxx	Fyy	Fxy	Fmax	Fmin	ANGLE
RC ENV~2	Max	Cent	-0.4	1.4	0.0	1.4	-0.4	-89.98
		525	-0.4	1.4	0.0	1.4	-0.4	-89.98
		526	-0.4	1.5	0.0	1.5	-0.4	-89.98
		534	-0.4	1.5	0.0	1.5	-0.4	-89.98
		533	-0.4	1.4	0.0	1.4	-0.4	-89.98
	Min	Cent	-2.3	0.6	-0.0	0.6	-2.3	-89.94
		525	-2.3	0.6	-0.0	0.6	-2.3	-89.94
		526	-2.3	0.6	-0.0	0.6	-2.3	-89.94
		534	-2.3	0.6	-0.0	0.6	-2.3	-89.94
		533	-2.3	0.6	-0.0	0.6	-2.3	-89.94

	NODE	Mxx	Myy	Mxy	Mmax	Mmin	ANGLE
Max	Cent	-4.6	-0.5	-0.7	-0.3	-4.7	-68.63
	525	-4.9	0.1	-0.5	0.2	-4.9	-75.95
	526	-3.7	-0.7	-0.6	-0.6	-4.1	-80.53
	534	-4.0	-1.1	-0.9	-0.6	-4.5	-59.61
	533	-5.2	-0.4	-0.8	-0.0	-5.3	-70.95
Min	Cent	-5.4	-2.1	-2.4	-1.0	-6.6	-68.20
	525	-5.7	-1.3	-2.1	-0.5	-6.5	-74.38
	526	-4.7	-2.4	-2.2	-1.2	-6.0	-65.35
	534	-5.0	-2.9	-2.7	-1.2	-6.8	-60.98
	533	-6.1	-1.9	-2.6	-0.8	-7.3	-70.20

	NODE	Vxx	Vyy
Max	Cent	-1.5	0.9
	525	-1.5	0.9
	526	-1.5	0.8
	534	-1.6	0.8
	533	-1.6	0.9
Min	Cent	-3.4	0.8
	525	-3.3	0.9
	526	-3.3	0.8
	534	-3.5	0.8
	533	-3.5	0.9

ELEM	MAT	SEC	LC		NODE	Fxx	Fyy	Fxy	Fmax	Fmin	ANGLE
490	1	1	SX (RS)		Cent	0.6	0.5	0.0	0.6	0.5	12.60
					526	0.6	0.5	0.0	0.6	0.5	17.81
					527	0.6	0.5	0.0	0.6	0.5	9.82
					535	0.6	0.5	0.0	0.6	0.5	9.84
					534	0.6	0.5	0.0	0.6	0.5	17.85

	NODE	Mxx	Myy	Mxy	Mmax	Mmin	ANGLE
	Cent	2.1	0.5	0.0	2.1	0.5	0.07
	526	2.4	0.6	0.0	2.4	0.6	1.35
	527	1.8	0.4	0.0	1.8	0.4	1.78
	535	1.8	0.4	0.0	1.8	0.4	1.77
	534	2.4	0.6	0.0	2.4	0.6	1.35

	NODE	Vxx	Vyy
	Cent	1.4	0.0
	526	1.4	0.0
	527	1.4	0.0
	535	1.4	0.0
	534	1.4	0.0

LC		NODE	Fxx	Fyy	Fxy	Fmax	Fmin	ANGLE
SY (RS)		Cent	0.0	0.1	1.5	1.5	-1.5	45.50
		526	0.1	0.1	1.5	1.6	-1.4	44.48
		527	0.1	0.1	1.5	1.6	-1.4	44.48
		535	0.1	0.1	1.5	1.6	-1.4	44.46
		534	0.1	0.1	1.5	1.6	-1.4	44.46

	NODE	Mxx	Myy	Mxy	Mmax	Mmin	ANGLE
	Cent	0.0	0.0	0.9	0.9	-0.9	45.00

526	0.0	0.7	0.9	1.3	-0.6	55.61
527	0.5	1.1	0.8	1.6	-0.0	54.36
535	0.5	1.1	0.8	1.6	-0.0	54.36
534	0.0	0.7	0.9	1.3	-0.6	55.61

NODE	Vxx	Vyy
Cent	0.0	3.2
526	0.8	2.8
527	0.8	3.7
535	0.8	3.7
534	0.8	2.8

LC		NODE	Fxx	Fyy	Fxy	Fmax	Fmin	ANGLE
RC ENV~1	Max	Cent	-0.4	2.0	1.5	2.0	-0.4	-89.99
		526	-0.4	2.0	1.5	2.0	-0.4	-89.99
		527	-0.4	2.0	1.5	2.0	-0.4	-89.99
		535	-0.4	2.0	1.5	2.0	-0.4	-89.99
		534	-0.4	2.0	1.5	2.0	-0.4	-89.99
	Min	Cent	-3.1	0.3	-1.5	0.3	-3.1	-89.48
		526	-3.1	0.3	-1.5	0.3	-3.1	-89.47
		527	-3.1	0.4	-1.5	0.4	-3.1	-89.48
		535	-3.1	0.4	-1.5	0.4	-3.1	-89.48
		534	-3.1	0.3	-1.5	0.3	-3.1	-89.47

	NODE	Mxx	Myy	Mxy	Mmax	Mmin	ANGLE
Max	Cent	-1.0	-0.7	-0.0	0.2	-1.7	-40.58
	526	-1.1	0.1	0.3	0.3	-1.3	-67.16
	527	-0.6	-0.4	0.1	0.5	-1.5	-26.68
	535	-0.8	-0.9	-0.3	1.0	-2.1	-31.60
	534	-1.4	-0.4	-0.2	0.3	-2.0	-49.36
Min	Cent	-5.1	-4.6	-3.9	-1.6	-8.3	-76.04
	526	-5.9	-3.4	-3.4	-1.1	-7.7	-82.04
	527	-4.1	-5.3	-3.5	-1.7	-7.9	-73.17
	535	-4.3	-5.7	-4.4	-1.8	-9.0	-65.25
	534	-6.1	-4.0	-4.3	-1.5	-9.0	-76.87

	NODE	Vxx	Vyy
Max	Cent	-1.0	4.0
	526	-0.9	3.6
	527	-0.9	4.4
	535	-1.0	4.4
	534	-1.0	3.6
Min	Cent	-5.6	-2.4
	526	-5.4	-1.9
	527	-5.4	-3.0
	535	-5.7	-3.0
	534	-5.7	-1.9

LC		NODE	Fxx	Fyy	Fxy	Fmax	Fmin	ANGLE
RC ENV~2	Max	Cent	-0.5	1.5	0.0	1.5	-0.5	89.99
		526	-0.5	1.5	0.0	1.5	-0.5	89.99
		527	-0.5	1.5	0.0	1.5	-0.5	89.99
		535	-0.5	1.5	0.0	1.5	-0.5	89.99
		534	-0.5	1.5	0.0	1.5	-0.5	89.99
	Min	Cent	-2.2	0.6	-0.0	0.6	-2.2	89.96
		526	-2.2	0.6	-0.0	0.6	-2.2	89.96
		527	-2.2	0.6	-0.0	0.6	-2.2	89.96
		535	-2.2	0.6	-0.0	0.6	-2.2	89.96
		534	-2.2	0.6	-0.0	0.6	-2.2	89.96

	NODE	Mxx	Myy	Mxy	Mmax	Mmin	ANGLE
Max	Cent	-1.9	-1.2	-0.9	-0.1	-3.2	-43.05
	526	-2.7	-0.5	-0.6	-0.3	-3.4	-58.99
	527	-0.8	-1.5	-0.7	0.0	-2.5	-28.01
	535	-1.0	-1.9	-1.1	0.5	-3.2	-32.80
	534	-3.0	-1.0	-1.0	0.0	-3.9	-53.82
Min	Cent	-3.3	-3.1	-2.6	-1.0	-5.8	-67.38
	526	-3.8	-2.3	-2.3	-0.8	-5.4	-60.97
	527	-2.6	-3.6	-2.3	-1.1	-5.5	-60.47
	535	-2.7	-4.0	-3.0	-1.1	-6.3	-52.78
	534	-4.1	-2.7	-2.9	-0.8	-6.4	-56.82

	NODE	Vxx	Vyy
Max	Cent	-2.3	0.8
	526	-2.3	0.8
	527	-2.3	0.7
	535	-2.4	0.7
	534	-2.4	0.8
Min	Cent	-4.0	0.6
	526	-3.9	0.8
	527	-3.9	0.5
	535	-4.1	0.5
	534	-4.1	0.8

ELEM	MAT	SEC	LC	NODE	Fxx	Fyy	Fxy	Fmax	Fmin	ANGLE
491	1	1	SX (RS)	Cent	0.2	0.2	0.0	0.2	0.1	66.84
				527	0.2	0.4	0.0	0.4	0.2	84.46
				528	0.2	0.0	0.0	0.2	0.0	10.29
				536	0.2	0.0	0.0	0.2	0.0	10.34
				535	0.2	0.4	0.0	0.4	0.2	84.48

	NODE	Mxx	Myy	Mxy	Mmax	Mmin	ANGLE
	Cent	0.8	0.2	0.0	0.8	0.2	0.29
	527	1.5	0.5	0.1	1.5	0.5	7.42
	528	0.0	0.0	0.1	0.2	-0.1	43.11
	536	0.0	0.0	0.1	0.2	-0.1	43.08
	535	1.5	0.5	0.1	1.5	0.5	7.42

	NODE	Vxx	Vyy
	Cent	2.9	0.0
	527	2.9	0.0
	528	2.9	0.0
	536	2.9	0.0
	535	2.9	0.0

LC	NODE	Fxx	Fyy	Fxy	Fmax	Fmin	ANGLE
SY (RS)	Cent	0.0	0.1	0.6	0.6	-0.6	46.22
	527	0.3	0.1	0.6	0.8	-0.4	38.71
	528	0.3	0.1	0.6	0.8	-0.4	38.69
	536	0.3	0.1	0.6	0.8	-0.4	38.71
	535	0.3	0.1	0.6	0.8	-0.4	38.74

	NODE	Mxx	Myy	Mxy	Mmax	Mmin	ANGLE
	Cent	0.0	0.0	0.4	0.4	-0.4	45.00
	527	0.4	1.0	0.6	1.4	0.1	59.32
	528	0.7	1.2	0.2	1.3	0.7	68.54
	536	0.7	1.2	0.2	1.3	0.7	68.54
	535	0.4	1.0	0.6	1.4	0.1	59.32

	NODE	Vxx	Vyy
	Cent	0.0	3.9
	527	0.5	3.7
	528	0.5	4.1
	536	0.5	4.1
	535	0.5	3.7

LC		NODE	Fxx	Fyy	Fxy	Fmax	Fmin	ANGLE
RC ENV~1	Max	Cent	-0.7	2.0	0.6	2.0	-0.7	-89.97
		527	-0.7	2.0	0.6	2.0	-0.7	-89.97
		528	-0.7	1.9	0.6	1.9	-0.7	-89.97
		536	-0.7	1.9	0.6	1.9	-0.7	-89.97
		535	-0.7	2.0	0.6	2.0	-0.7	-89.97
	Min	Cent	-3.0	0.6	-0.6	0.6	-3.0	-89.35
		527	-3.0	0.4	-0.6	0.4	-3.0	-89.27
		528	-3.0	0.8	-0.6	0.8	-3.0	-89.40
		536	-3.0	0.8	-0.6	0.8	-3.0	-89.40
		535	-3.0	0.4	-0.6	0.4	-3.0	-89.27

	NODE	Mxx	Myy	Mxy	Mmax	Mmin	ANGLE

Max	Cent	1.3	-1.6	-0.6	2.5	-2.3	-22.30
	527	0.7	-0.3	-0.3	1.9	-1.4	-24.82
	528	2.0	-0.7	-0.7	2.8	-1.3	-17.71
	536	2.0	-1.1	-0.9	3.2	-1.8	-20.48
	535	0.4	-0.8	-0.5	2.1	-1.8	-27.47
Min	Cent	-2.4	-5.9	-4.0	-1.2	-8.3	-48.68
	527	-3.3	-5.1	-3.7	-1.4	-7.6	-63.25
	528	-2.0	-6.5	-3.7	-1.3	-8.4	-30.83
	536	-2.1	-6.7	-4.4	-1.3	-8.9	-31.25
	535	-3.5	-5.5	-4.3	-1.5	-8.4	-58.45

	NODE	Vxx	Vyy
Max	Cent	1.6	4.6
	527	1.7	4.4
	528	1.7	4.7
	536	1.5	4.7
	535	1.5	4.4
Min	Cent	-4.1	-3.2
	527	-4.0	-3.0
	528	-4.0	-3.5
	536	-4.2	-3.5
	535	-4.2	-3.0

LC		NODE	Fxx	Fyy	Fxy	Fmax	Fmin	ANGLE
RC ENV~2	Max	Cent	-0.6	1.4	0.0	1.4	-0.6	-89.99
		527	-0.6	1.5	0.0	1.5	-0.6	-89.99
		528	-0.6	1.4	0.0	1.4	-0.6	-89.99
		536	-0.6	1.4	0.0	1.4	-0.6	-89.99
		535	-0.6	1.5	0.0	1.5	-0.6	-89.99
	Min	Cent	-2.1	0.7	-0.0	0.7	-2.1	-89.96
		527	-2.1	0.6	-0.0	0.6	-2.1	-89.96
		528	-2.1	0.7	-0.0	0.7	-2.1	-89.86
		536	-2.1	0.7	-0.0	0.7	-2.1	-89.86
		535	-2.1	0.6	-0.0	0.6	-2.1	-89.96

	NODE	Mxx	Myy	Mxy	Mmax	Mmin	ANGLE
Max	Cent	0.6	-1.9	-1.0	1.5	-2.6	-22.90
	527	0.2	-1.4	-0.8	1.0	-2.2	-25.83
	528	1.2	-2.0	-0.9	1.7	-2.5	-18.06
	536	1.1	-2.3	-1.1	2.0	-3.0	-20.86
	535	0.0	-1.8	-1.1	1.2	-2.8	-28.36
Min	Cent	-1.6	-4.1	-2.7	-0.8	-5.7	-41.34
	527	-1.8	-3.5	-2.5	-0.8	-5.2	-51.32
	528	-1.3	-4.5	-2.5	-0.7	-5.7	-34.57
	536	-1.4	-4.6	-2.9	-0.6	-6.2	-34.14
	535	-2.0	-3.8	-2.9	-0.9	-5.8	-47.34

	NODE	Vxx	Vyy
Max	Cent	-1.2	0.7
	527	-1.1	0.7
	528	-1.1	0.6
	536	-1.3	0.6
	535	-1.3	0.7
Min	Cent	-2.3	0.4
	527	-2.1	0.5
	528	-2.1	0.3
	536	-2.4	0.3
	535	-2.4	0.5

ELEM	MAT	SEC	LC		NODE	Fxx	Fyy	Fxy	Fmax	Fmin	ANGLE
492	1	1	SX	(RS)	Cent	1.0	1.1	0.5	1.6	0.5	50.08
					167	0.7	1.3	0.5	1.6	0.4	61.01
					529	0.7	1.0	0.5	1.4	0.3	52.96
					537	1.3	1.0	0.5	1.7	0.6	37.28
					170	1.3	1.3	0.5	1.8	0.8	46.83

	NODE	Mxx	Myy	Mxy	Mmax	Mmin	ANGLE
	Cent	3.7	1.0	0.6	3.8	0.8	12.66
	167	2.7	1.3	0.7	3.0	1.0	22.79
	529	3.7	0.6	0.3	3.7	0.6	5.11

```
                537        4.2        0.7        0.6        4.3        0.6       9.39
                170        4.2        1.4        1.0        4.5        1.1      18.31

               NODE        Vxx        Vyy
         ---- ------ ---------- ----------
               Cent        1.2        0.1
                167        2.1        0.3
                529        2.1        0.1
                537        0.4        0.1
                170        0.4        0.3


      LC        NODE        Fxx        Fyy        Fxy       Fmax       Fmin      ANGLE
-------- ---- ------ ---------- ---------- ---------- ---------- ---------- ----------
      SY (RS)   Cent        0.4        1.0        1.7        2.5       -1.0      50.44
                167        0.1        1.3        1.7        2.5       -1.1      54.37
                529        0.1        0.8        1.7        2.2       -1.3      50.86
                537        0.7        0.8        1.7        2.5       -1.0      46.24
                170        0.7        1.3        1.7        2.7       -0.8      49.97

               NODE        Mxx        Myy        Mxy       Mmax       Mmin      ANGLE
         ---- ------ ---------- ---------- ---------- ---------- ---------- ----------
               Cent        0.6        1.3        0.9        1.9        0.0      55.19
                167        0.3        0.5        0.9        1.3       -0.5      47.92
                529        0.2        0.6        0.8        1.2       -0.5      51.45
                537        0.9        2.0        0.9        2.5        0.4      61.81
                170        1.2        2.1        1.0        2.7        0.6      57.77

               NODE        Vxx        Vyy
         ---- ------ ---------- ----------
               Cent        0.4        2.7
                167        0.4        2.9
                529        0.4        2.6
                537        0.6        2.6
                170        0.6        2.9


      LC        NODE        Fxx        Fyy        Fxy       Fmax       Fmin      ANGLE
-------- ---- ------ ---------- ---------- ---------- ---------- ---------- ----------
RC ENV~1  Max   Cent        0.3        1.6        1.9        2.7        0.0      56.90
                167        0.2        1.8        1.9        2.8       -0.1      59.04
                529        0.2        1.4        1.9        2.5       -0.1      56.24
                537        0.5        1.4        1.9        2.6        0.1      54.58
                170        0.5        1.8        1.9        2.9        0.2      57.52
          Min   Cent       -2.1       -0.7       -1.5       -0.6       -2.3     -71.01
                167       -1.5       -0.9       -1.5       -0.7       -2.2     -54.21
                529       -1.5       -0.6       -1.5       -0.4       -2.0     -65.53
                537       -2.7       -0.6       -1.5       -0.5       -2.9     -77.99
                170       -2.7       -0.9       -1.5       -0.8       -2.9     -74.81

               NODE        Mxx        Myy        Mxy       Mmax       Mmin      ANGLE
         ---- ------ ---------- ---------- ---------- ---------- ---------- ----------
          Max   Cent        8.7        1.8        1.0        8.8        1.5      -8.53
                167        9.6        1.8        0.8        9.9        1.7      -9.95
                529        6.1        0.6        1.1        6.1        0.6       5.16
                537        7.0        2.4        1.1        7.1        1.7       8.09
                170       12.9        3.3        1.0       13.2        3.1      -8.94
          Min   Cent        0.8       -0.8       -1.8        1.0       -1.0     -20.19
                167        3.1       -0.7       -2.2        3.3       -0.9     -11.53
                529       -1.3       -1.1       -1.6       -0.6       -1.7     -85.25
                537       -1.5       -1.7       -1.6       -0.3       -1.8     -74.33
                170        2.8       -1.0       -2.2        3.2       -1.1     -17.58

               NODE        Vxx        Vyy
         ---- ------ ---------- ----------
          Max   Cent        9.9        2.2
                167        9.2        2.2
                529        9.2        2.2
                537       11.4        2.2
                170       11.4        2.2
          Min   Cent        5.4       -3.3
                167        3.8       -3.5
                529        3.8       -3.0
                537        6.8       -3.0
                170        6.8       -3.5


      LC        NODE        Fxx        Fyy        Fxy       Fmax       Fmin      ANGLE
-------- ---- ------ ---------- ---------- ---------- ---------- ---------- ----------
```

RC ENV~2	Max	Cent	-0.0	0.5	0.6	0.7	-0.1	74.51
		167	-0.1	0.6	0.6	0.8	-0.2	70.18
		529	-0.1	0.6	0.6	0.7	-0.2	70.75
		537	0.1	0.6	0.6	0.6	0.0	83.69
		170	0.1	0.6	0.6	0.7	-0.0	76.20
	Min	Cent	-1.5	0.4	-0.2	0.4	-1.6	-88.96
		167	-1.0	0.3	-0.2	0.3	-1.2	-88.81
		529	-1.0	0.3	-0.2	0.4	-1.2	76.99
		537	-1.9	0.3	-0.2	0.4	-2.1	80.18
		170	-1.9	0.3	-0.2	0.3	-2.1	-88.84

	NODE	Mxx	Myy	Mxy	Mmax	Mmin	ANGLE
Max	Cent	6.4	0.6	0.1	6.5	0.6	-7.16
	167	7.2	0.6	-0.0	7.4	0.6	-8.66
	529	4.0	0.0	0.2	4.0	0.0	-5.70
	537	4.8	0.4	0.3	4.8	0.4	-6.49
	170	9.6	1.4	0.0	9.7	1.3	-7.80
Min	Cent	2.6	-0.3	-1.1	2.6	-0.5	-6.30
	167	4.5	-0.2	-1.4	4.5	-0.4	-5.33
	529	0.6	-0.7	-1.0	0.7	-1.0	-19.93
	537	0.5	-0.5	-1.0	0.6	-0.8	-12.58
	170	4.8	0.1	-1.4	4.8	-0.0	-3.19

	NODE	Vxx	Vyy
Max	Cent	7.5	-0.1
	167	6.9	-0.2
	529	6.9	0.0
	537	8.5	0.0
	170	8.5	-0.2
Min	Cent	6.6	-1.3
	167	5.5	-1.4
	529	5.5	-1.3
	537	7.4	-1.3
	170	7.4	-1.4

ELEM	MAT	SEC	LC		NODE	Fxx	Fyy	Fxy	Fmax	Fmin	ANGLE
493	1	1	SX (RS)		Cent	1.1	0.9	0.5	1.5	0.5	38.62
					529	1.1	1.0	0.5	1.5	0.6	43.98
					530	1.1	0.8	0.5	1.4	0.4	36.05
					538	1.1	0.8	0.5	1.4	0.4	33.87
					537	1.1	1.0	0.5	1.5	0.6	41.52

	NODE	Mxx	Myy	Mxy	Mmax	Mmin	ANGLE
	Cent	4.3	0.7	0.1	4.3	0.7	2.26
	529	4.0	0.7	0.2	4.0	0.6	4.09
	530	4.2	0.5	0.1	4.2	0.5	1.12
	538	4.8	1.0	0.1	4.8	1.0	2.24
	537	4.5	0.8	0.2	4.5	0.8	3.43

	NODE	Vxx	Vyy
	Cent	0.6	0.5
	529	0.6	0.1
	530	0.6	1.0
	538	0.6	1.0
	537	0.6	0.1

LC		NODE	Fxx	Fyy	Fxy	Fmax	Fmin	ANGLE
SY (RS)		Cent	0.2	0.5	2.3	2.6	-1.9	46.85
		529	0.1	0.9	2.3	2.8	-1.8	49.61
		530	0.1	0.1	2.3	2.4	-2.1	44.81
		538	0.3	0.1	2.3	2.5	-2.1	43.93
		537	0.3	0.9	2.3	2.9	-1.7	48.74

	NODE	Mxx	Myy	Mxy	Mmax	Mmin	ANGLE
	Cent	0.3	1.2	0.7	1.6	-0.1	60.41
	529	0.3	0.6	0.8	1.2	-0.4	50.92
	530	0.1	0.7	0.6	1.1	-0.3	56.21
	538	0.5	1.5	0.6	1.7	0.2	64.41
	537	0.7	2.0	0.8	2.3	0.3	65.34

	NODE	Vxx	Vyy
	Cent	0.7	2.1
	529	0.4	2.6
	530	0.4	1.7
	538	1.1	1.7
	537	1.1	2.6

LC		NODE	Fxx	Fyy	Fxy	Fmax	Fmin	ANGLE
RC ENV~1	Max	Cent	0.4	1.3	2.4	2.7	0.1	53.34
		529	0.3	1.4	2.4	2.9	0.1	55.34
		530	0.3	1.2	2.4	2.5	0.0	51.71
		538	0.4	1.2	2.4	2.5	0.1	51.13
		537	0.4	1.4	2.4	3.0	0.1	54.80
	Min	Cent	-2.4	-0.4	-2.1	-0.4	-2.6	-77.85
		529	-2.3	-0.6	-2.1	-0.6	-2.8	-75.62
		530	-2.3	-0.3	-2.1	-0.2	-2.5	-78.71
		538	-2.5	-0.3	-2.1	-0.2	-2.6	-79.47
		537	-2.5	-0.6	-2.1	-0.6	-2.9	-76.79

	NODE	Mxx	Myy	Mxy	Mmax	Mmin	ANGLE
Max	Cent	4.9	1.3	1.1	5.0	0.8	7.53
	529	6.1	0.6	1.0	6.1	0.6	4.98
	530	3.1	0.8	0.9	3.2	0.6	7.67
	538	3.5	1.6	1.1	3.7	1.0	15.34
	537	7.0	2.3	1.3	7.1	1.4	6.97
Min	Cent	-3.7	-1.1	-1.5	-0.5	-3.8	85.29
	529	-1.8	-1.2	-1.6	-0.7	-1.9	89.81
	530	-5.2	-0.9	-1.7	-0.4	-5.2	-78.27
	538	-6.0	-1.4	-1.4	-1.3	-6.0	-82.95
	537	-2.0	-1.7	-1.3	-0.4	-2.0	79.22

	NODE	Vxx	Vyy
Max	Cent	9.9	1.8
	529	8.9	2.2
	530	8.9	1.5
	538	10.9	1.5
	537	10.9	2.2
Min	Cent	5.4	-2.4
	529	5.1	-3.0
	530	5.1	-1.8
	538	5.6	-1.8
	537	5.6	-3.0

LC		NODE	Fxx	Fyy	Fxy	Fmax	Fmin	ANGLE
RC ENV~2	Max	Cent	-0.1	0.7	0.6	0.7	-0.1	85.63
		529	-0.1	0.6	0.6	0.6	-0.2	85.27
		530	-0.1	0.8	0.6	0.8	-0.2	85.87
		538	-0.1	0.8	0.6	0.8	-0.1	85.93
		537	-0.1	0.6	0.6	0.6	-0.1	85.35
	Min	Cent	-1.7	0.3	-0.2	0.4	-1.8	76.83
		529	-1.6	0.2	-0.2	0.4	-1.8	76.21
		530	-1.6	0.3	-0.2	0.4	-1.8	76.85
		538	-1.7	0.3	-0.2	0.4	-1.8	77.41
		537	-1.7	0.2	-0.2	0.4	-1.9	76.82

	NODE	Mxx	Myy	Mxy	Mmax	Mmin	ANGLE
Max	Cent	2.2	0.2	0.5	2.2	0.0	-3.57
	529	3.8	-0.0	0.3	3.8	-0.0	-5.55
	530	0.2	0.1	0.3	0.4	-0.3	-28.19
	538	0.3	0.4	0.6	0.6	0.2	65.72
	537	4.5	0.4	0.6	4.5	0.2	-0.13
Min	Cent	-1.5	-0.7	-0.9	-0.4	-1.8	-76.31
	529	0.3	-0.8	-1.0	0.5	-1.1	-26.40
	530	-3.0	-0.6	-1.0	-0.3	-3.1	-81.05
	538	-3.5	-0.9	-0.8	-0.7	-3.6	-84.02
	537	0.2	-0.6	-0.7	0.3	-0.9	-16.05

	NODE	Vxx	Vyy
Max	Cent	7.4	0.3
	529	6.7	0.0

		530	6.7	0.6	
		538	8.1	0.6	
		537	8.1	0.0	
	Min	Cent	6.1	-1.2	
		529	5.7	-1.3	
		530	5.7	-1.2	
		538	6.6	-1.2	
		537	6.6	-1.3	

ELEM	MAT	SEC	LC		NODE	Fxx	Fyy	Fxy	Fmax	Fmin	ANGLE
494	1	1	SX (RS)		Cent	1.4	0.6	0.4	1.6	0.4	23.60
					530	1.2	0.8	0.4	1.5	0.5	32.06
					531	1.2	0.5	0.4	1.4	0.3	25.02
					539	1.7	0.5	0.4	1.8	0.4	18.19
					538	1.7	0.8	0.4	1.9	0.6	22.43

		NODE	Mxx	Myy	Mxy	Mmax	Mmin	ANGLE
		Cent	4.0	0.7	0.2	4.0	0.7	3.63
		530	4.1	0.5	0.1	4.1	0.5	2.12
		531	3.7	0.7	0.2	3.7	0.6	3.09
		539	3.7	0.9	0.3	3.7	0.8	5.31
		538	4.5	1.0	0.2	4.6	1.0	3.74

		NODE	Vxx	Vyy
		Cent	1.4	0.7
		530	1.1	1.0
		531	1.1	0.5
		539	1.7	0.5
		538	1.7	1.0

LC		NODE	Fxx	Fyy	Fxy	Fmax	Fmin	ANGLE
SY (RS)		Cent	0.3	0.0	2.2	2.4	-2.1	42.98
		530	0.1	0.2	2.2	2.4	-2.1	45.35
		531	0.1	0.2	2.2	2.4	-2.1	45.47
		539	0.5	0.2	2.2	2.6	-1.9	42.68
		538	0.5	0.2	2.2	2.6	-1.9	42.56

		NODE	Mxx	Myy	Mxy	Mmax	Mmin	ANGLE
		Cent	0.2	0.9	0.4	1.1	0.1	66.15
		530	0.1	0.7	0.5	0.9	-0.2	59.36
		531	0.1	0.5	0.3	0.7	-0.1	61.08
		539	0.4	1.0	0.3	1.1	0.3	69.35
		538	0.4	1.5	0.4	1.7	0.3	70.73

		NODE	Vxx	Vyy
		Cent	0.4	1.4
		530	0.2	1.7
		531	0.2	1.1
		539	0.6	1.1
		538	0.6	1.7

LC		NODE	Fxx	Fyy	Fxy	Fmax	Fmin	ANGLE
RC ENV~1	Max	Cent	0.5	1.2	2.4	2.4	0.2	52.04
		530	0.4	1.2	2.4	2.4	0.1	52.86
		531	0.4	1.5	2.4	2.6	0.1	54.27
		539	0.6	1.5	2.4	2.6	0.3	53.03
		538	0.6	1.2	2.4	2.5	0.3	51.59
	Min	Cent	-3.2	-0.1	-2.1	-0.0	-3.3	-82.80
		530	-2.8	-0.4	-2.1	-0.3	-2.9	-80.40
		531	-2.8	0.2	-2.1	0.2	-2.9	-82.60
		539	-3.7	0.2	-2.1	0.2	-3.7	-84.24
		538	-3.7	-0.4	-2.1	-0.3	-3.7	-82.96

		NODE	Mxx	Myy	Mxy	Mmax	Mmin	ANGLE
	Max	Cent	1.1	1.0	0.6	1.4	0.5	33.02
		530	2.7	0.7	0.7	2.8	0.5	8.77
		531	-0.1	0.9	0.4	0.9	-0.2	79.66
		539	-0.9	0.8	0.5	0.9	-1.0	84.59

538	2.9	1.6	0.8	3.1	0.9	17.09
Min Cent	-6.9	-1.4	-2.0	-0.9	-7.2	-85.76
530	-5.5	-1.0	-1.9	-0.5	-5.5	-74.61
531	-7.8	-1.2	-2.3	-0.5	-8.4	-78.39
539	-9.1	-2.0	-2.2	-1.4	-9.5	-79.49
538	-6.2	-1.5	-1.8	-1.4	-6.2	-86.64

	NODE	Vxx	Vyy
Max	Cent	8.6	1.6
	530	7.7	1.5
	531	7.7	1.6
	539	9.5	1.6
	538	9.5	1.5
Min	Cent	3.4	-1.2
	530	3.3	-1.8
	531	3.3	-0.5
	539	3.4	-0.5
	538	3.4	-1.8

LC		NODE	Fxx	Fyy	Fxy	Fmax	Fmin	ANGLE
RC ENV~2	Max	Cent	-0.1	0.9	0.5	0.9	-0.1	87.34
		530	-0.2	0.7	0.5	0.7	-0.2	87.01
		531	-0.2	1.1	0.5	1.1	-0.2	81.75
		539	-0.0	1.1	0.5	1.1	-0.1	83.06
		538	-0.0	0.7	0.5	0.7	-0.1	87.25
	Min	Cent	-2.3	0.4	-0.2	0.5	-2.3	81.08
		530	-2.0	0.2	-0.2	0.3	-2.1	76.83
		531	-2.0	0.6	-0.2	0.6	-2.0	-87.88
		539	-2.6	0.6	-0.2	0.6	-2.6	-87.85
		538	-2.6	0.2	-0.2	0.3	-2.6	79.79

	NODE	Mxx	Myy	Mxy	Mmax	Mmin	ANGLE
Max	Cent	-2.1	0.1	0.3	0.2	-2.1	83.88
	530	-0.3	0.1	0.3	0.2	-0.6	-53.71
	531	-3.3	0.3	0.1	0.3	-3.4	88.89
	539	-4.1	-0.0	0.3	0.0	-4.2	-87.33
	538	-0.4	0.3	0.5	0.4	-0.4	73.61
Min	Cent	-4.8	-0.9	-1.3	-0.6	-5.0	-80.28
	530	-3.3	-0.6	-1.2	-0.3	-3.5	-80.20
	531	-5.7	-0.7	-1.5	-0.3	-6.0	-80.31
	539	-6.6	-1.3	-1.3	-1.0	-6.8	-76.11
	538	-3.8	-1.0	-1.1	-0.7	-3.9	-80.02

	NODE	Vxx	Vyy
Max	Cent	6.4	0.7
	530	5.7	0.6
	531	5.7	0.9
	539	7.0	0.9
	538	7.0	0.6
Min	Cent	4.2	-0.6
	530	4.1	-1.2
	531	4.1	0.0
	539	4.4	0.0
	538	4.4	-1.2

ELEM	MAT	SEC	LC		NODE	Fxx	Fyy	Fxy	Fmax	Fmin	ANGLE
495	1	1	SX	(RS)	Cent	1.5	0.5	0.3	1.5	0.4	13.82
					531	1.3	0.5	0.3	1.4	0.4	16.29
					532	1.3	0.4	0.3	1.4	0.3	14.67
					540	1.6	0.4	0.3	1.6	0.3	11.96
					539	1.6	0.5	0.3	1.6	0.4	13.06

	NODE	Mxx	Myy	Mxy	Mmax	Mmin	ANGLE
	Cent	3.2	0.7	0.2	3.2	0.7	3.83
	531	3.6	0.6	0.2	3.6	0.6	2.90
	532	2.9	0.7	0.1	3.0	0.7	3.21
	540	2.8	0.7	0.2	2.8	0.7	4.97
	539	3.6	0.9	0.2	3.6	0.8	4.35

	NODE	Vxx	Vyy

	Cent	1.8	0.4	
	531	1.7	0.5	
	532	1.7	0.3	
	540	1.9	0.3	
	539	1.9	0.5	

LC		NODE	Fxx	Fyy	Fxy	Fmax	Fmin	ANGLE
SY (RS)		Cent	0.2	0.2	2.0	2.2	-1.8	44.68
		531	0.1	0.2	2.0	2.1	-1.8	45.51
		532	0.1	0.2	2.0	2.1	-1.8	45.23
		540	0.3	0.2	2.0	2.2	-1.7	43.85
		539	0.3	0.2	2.0	2.2	-1.7	44.12

	NODE	Mxx	Myy	Mxy	Mmax	Mmin	ANGLE
	Cent	0.2	0.8	0.1	0.8	0.2	80.99
	531	0.1	0.5	0.2	0.6	0.1	72.24
	532	0.1	0.5	0.0	0.5	0.1	85.75
	540	0.3	1.0	0.1	1.1	0.3	85.13
	539	0.4	1.1	0.2	1.1	0.3	76.49

	NODE	Vxx	Vyy
	Cent	0.1	1.1
	531	0.1	1.1
	532	0.1	1.1
	540	0.2	1.1
	539	0.2	1.1

LC		NODE	Fxx	Fyy	Fxy	Fmax	Fmin	ANGLE
RC ENV~1	Max	Cent	0.4	1.6	2.0	2.2	0.3	56.31
		531	0.4	1.4	2.0	2.2	0.2	56.42
		532	0.4	1.7	2.0	2.2	0.2	56.78
		540	0.5	1.7	2.0	2.3	0.4	56.18
		539	0.5	1.4	2.0	2.2	0.4	55.82
	Min	Cent	-3.4	0.3	-1.9	0.3	-3.4	-85.56
		531	-3.2	0.1	-1.9	0.2	-3.2	-85.07
		532	-3.2	0.4	-1.9	0.4	-3.2	-85.46
		540	-3.6	0.4	-1.9	0.4	-3.6	-85.96
		539	-3.6	0.1	-1.9	0.2	-3.6	-85.67

	NODE	Mxx	Myy	Mxy	Mmax	Mmin	ANGLE
Max	Cent	-1.9	0.7	-0.1	0.7	-1.9	-88.35
	531	-0.5	0.8	-0.0	0.8	-0.5	-89.87
	532	-2.5	0.7	-0.3	0.7	-2.5	-85.18
	540	-3.4	0.6	-0.2	0.6	-3.4	-87.38
	539	-1.1	0.8	0.1	0.8	-1.1	89.30
Min	Cent	-9.5	-1.8	-2.9	-1.0	-10.3	-76.22
	531	-8.0	-1.2	-2.6	-0.5	-8.8	-87.60
	532	-9.7	-1.7	-3.1	-0.7	-10.7	-75.85
	540	-11.0	-2.5	-3.1	-1.5	-11.9	-84.99
	539	-9.2	-2.0	-2.7	-1.3	-10.0	-85.56

	NODE	Vxx	Vyy
Max	Cent	4.7	1.7
	531	4.6	1.6
	532	4.6	1.8
	540	4.9	1.8
	539	4.9	1.6
Min	Cent	0.7	-0.4
	531	0.7	-0.5
	532	0.7	-0.3
	540	0.7	-0.3
	539	0.7	-0.5

LC		NODE	Fxx	Fyy	Fxy	Fmax	Fmin	ANGLE
RC ENV~2	Max	Cent	-0.2	1.1	0.2	1.2	-0.2	86.90
		531	-0.2	1.0	0.2	1.1	-0.2	86.68
		532	-0.2	1.3	0.2	1.3	-0.2	86.88
		540	-0.2	1.3	0.2	1.3	-0.2	87.09
		539	-0.2	1.0	0.2	1.1	-0.2	86.92

Min	Cent	-2.4	0.6	-0.1	0.6	-2.4	-83.22
	531	-2.3	0.6	-0.1	0.6	-2.3	-87.94
	532	-2.3	0.7	-0.1	0.7	-2.3	-83.70
	540	-2.5	0.7	-0.1	0.7	-2.5	-83.14
	539	-2.5	0.6	-0.1	0.6	-2.5	-87.92

	NODE	Mxx	Myy	Mxy	Mmax	Mmin	ANGLE
Max	Cent	-4.9	0.0	-0.2	0.1	-4.9	-80.54
	531	-3.5	0.3	-0.1	0.3	-3.8	-79.96
	532	-5.3	0.2	-0.4	0.3	-5.3	-79.28
	540	-6.0	-0.3	-0.3	-0.1	-6.1	-80.81
	539	-4.3	-0.1	-0.1	0.0	-4.5	-82.03
Min	Cent	-6.9	-1.2	-1.9	-0.7	-7.4	-78.07
	531	-5.8	-0.7	-1.7	-0.3	-6.3	-78.50
	532	-7.1	-1.0	-2.0	-0.5	-7.7	-77.63
	540	-8.1	-1.6	-2.0	-1.1	-8.6	-77.75
	539	-6.7	-1.3	-1.7	-0.9	-7.1	-78.52

	NODE	Vxx	Vyy
Max	Cent	3.5	0.9
	531	3.4	0.9
	532	3.4	0.9
	540	3.6	0.9
	539	3.6	0.9
Min	Cent	1.8	0.2
	531	1.8	0.0
	532	1.8	0.4
	540	1.8	0.4
	539	1.8	0.0

ELEM	MAT	SEC	LC		NODE	Fxx	Fyy	Fxy	Fmax	Fmin	ANGLE
496	1	1	SX	(RS)	Cent	1.3	0.4	0.3	1.4	0.3	16.19
					532	1.2	0.4	0.3	1.3	0.3	18.12
					533	1.2	0.4	0.3	1.3	0.3	17.63
					541	1.5	0.4	0.3	1.5	0.3	14.60
					540	1.5	0.4	0.3	1.5	0.3	14.95

	NODE	Mxx	Myy	Mxy	Mmax	Mmin	ANGLE
	Cent	2.6	0.6	0.2	2.6	0.6	6.00
	532	2.9	0.7	0.1	2.9	0.6	3.59
	533	2.5	0.6	0.2	2.5	0.6	5.98
	541	2.4	0.6	0.3	2.4	0.5	8.33
	540	2.8	0.7	0.2	2.8	0.7	5.80

	NODE	Vxx	Vyy
	Cent	1.9	0.5
	532	1.8	0.3
	533	1.8	0.6
	541	2.0	0.6
	540	2.0	0.3

LC		NODE	Fxx	Fyy	Fxy	Fmax	Fmin	ANGLE
SY	(RS)	Cent	0.1	0.2	1.8	2.0	-1.7	45.28
		532	0.1	0.2	1.8	2.0	-1.7	45.67
		533	0.1	0.2	1.8	2.0	-1.7	45.83
		541	0.2	0.2	1.8	2.0	-1.6	44.85
		540	0.2	0.2	1.8	2.0	-1.6	44.70

	NODE	Mxx	Myy	Mxy	Mmax	Mmin	ANGLE
	Cent	0.2	0.9	0.2	1.0	0.2	76.43
	532	0.2	0.5	0.2	0.6	0.1	68.65
	533	0.0	0.7	0.3	0.9	-0.1	69.20
	541	0.2	1.4	0.2	1.5	0.2	81.20
	540	0.4	1.0	0.1	1.0	0.4	84.24

	NODE	Vxx	Vyy
	Cent	0.2	1.2
	532	0.1	1.1
	533	0.1	1.4

		541	0.2	1.4			
		540	0.2	1.1			

LC		NODE	Fxx	Fyy	Fxy	Fmax	Fmin	ANGLE
RC ENV~1	Max	Cent	0.3	1.8	1.8	2.1	0.2	58.43
		532	0.2	1.7	1.8	2.0	0.1	58.48
		533	0.2	1.9	1.8	2.1	0.1	58.99
		541	0.4	1.9	1.8	2.1	0.3	58.36
		540	0.4	1.7	1.8	2.1	0.3	57.84
	Min	Cent	-3.4	0.4	-1.8	0.4	-3.4	-83.99
		532	-3.3	0.3	-1.8	0.4	-3.3	-83.61
		533	-3.3	0.4	-1.8	0.5	-3.3	-83.82
		541	-3.4	0.4	-1.8	0.5	-3.4	-84.33
		540	-3.4	0.3	-1.8	0.4	-3.4	-84.15

		NODE	Mxx	Myy	Mxy	Mmax	Mmin	ANGLE
	Max	Cent	-3.2	0.6	-0.6	0.6	-3.3	-84.48
		532	-2.5	0.7	-0.4	0.8	-2.6	-82.01
		533	-3.1	0.4	-0.6	0.5	-3.2	-84.69
		541	-3.8	0.8	-0.7	0.9	-3.9	-83.61
		540	-3.3	0.5	-0.5	0.6	-3.4	-84.29
	Min	Cent	-9.9	-2.3	-3.9	-1.1	-11.4	-78.96
		532	-9.4	-1.6	-3.5	-0.5	-10.6	-84.54
		533	-9.0	-2.4	-4.0	-0.8	-10.8	-69.61
		541	-10.2	-2.8	-4.3	-1.8	-12.1	-76.01
		540	-10.9	-2.4	-3.7	-1.4	-12.2	-81.76

		NODE	Vxx	Vyy
	Max	Cent	2.0	1.8
		532	2.0	1.8
		533	2.0	1.8
		541	2.0	1.8
		540	2.0	1.8
	Min	Cent	-1.8	-0.6
		532	-1.7	-0.3
		533	-1.7	-1.0
		541	-1.9	-1.0
		540	-1.9	-0.3

LC		NODE	Fxx	Fyy	Fxy	Fmax	Fmin	ANGLE
RC ENV~2	Max	Cent	-0.3	1.3	0.1	1.3	-0.3	88.92
		532	-0.3	1.3	0.1	1.3	-0.3	88.89
		533	-0.3	1.4	0.1	1.4	-0.3	88.93
		541	-0.3	1.4	0.1	1.4	-0.3	88.95
		540	-0.3	1.3	0.1	1.3	-0.3	88.91
	Min	Cent	-2.4	0.6	-0.1	0.7	-2.4	-85.31
		532	-2.4	0.6	-0.1	0.6	-2.4	-85.25
		533	-2.4	0.7	-0.1	0.7	-2.4	-85.42
		541	-2.4	0.7	-0.1	0.7	-2.4	-85.37
		540	-2.4	0.6	-0.1	0.6	-2.4	-85.19

		NODE	Mxx	Myy	Mxy	Mmax	Mmin	ANGLE
	Max	Cent	-5.7	-0.2	-0.8	0.2	-5.8	-74.99
		532	-5.3	0.2	-0.6	0.5	-5.3	-76.80
		533	-5.5	-0.2	-0.9	0.2	-5.6	-72.71
		541	-6.1	-0.5	-0.9	0.1	-6.3	-73.61
		540	-6.0	-0.3	-0.7	0.1	-6.1	-77.00
	Min	Cent	-7.3	-1.5	-2.6	-0.6	-8.2	-73.40
		532	-6.9	-1.0	-2.3	-0.3	-7.7	-75.54
		533	-6.7	-1.6	-2.7	-0.6	-7.8	-71.58
		541	-7.6	-1.9	-2.9	-0.8	-8.7	-71.63
		540	-8.0	-1.6	-2.5	-0.9	-8.8	-74.98

		NODE	Vxx	Vyy
	Max	Cent	0.7	0.6
		532	0.7	0.9
		533	0.7	0.4
		541	0.6	0.4
		540	0.6	0.9
	Min	Cent	-1.0	0.1
		532	-0.9	0.4

					533	-0.9	-0.2				
					541	-1.1	-0.2				
					540	-1.1	0.4				

ELEM	MAT	SEC	LC		NODE	Fxx	Fyy	Fxy	Fmax	Fmin	ANGLE
497	1	1	SX	(RS)	Cent	1.1	0.5	0.5	1.4	0.2	29.24
					533	0.9	0.4	0.5	1.2	0.1	30.25
					534	0.9	0.6	0.5	1.3	0.3	36.90
					542	1.3	0.6	0.5	1.6	0.4	28.11
					541	1.3	0.4	0.5	1.5	0.1	23.32

	NODE	Mxx	Myy	Mxy	Mmax	Mmin	ANGLE
	Cent	2.5	0.5	0.3	2.5	0.5	8.05
	533	2.6	0.6	0.2	2.6	0.6	6.38
	534	2.3	0.8	0.2	2.3	0.7	6.76
	542	2.7	0.4	0.3	2.8	0.4	7.60
	541	2.5	0.6	0.4	2.5	0.5	10.24

	NODE	Vxx	Vyy
	Cent	1.7	1.0
	533	1.4	0.6
	534	1.4	1.3
	542	2.0	1.3
	541	2.0	0.6

LC		NODE	Fxx	Fyy	Fxy	Fmax	Fmin	ANGLE
SY	(RS)	Cent	0.2	0.2	1.8	2.1	-1.6	45.01
		533	0.1	0.2	1.8	2.0	-1.7	46.06
		534	0.1	0.4	1.8	2.1	-1.6	47.33
		542	0.4	0.4	1.8	2.2	-1.5	44.84
		541	0.4	0.2	1.8	2.1	-1.6	43.57

	NODE	Mxx	Myy	Mxy	Mmax	Mmin	ANGLE
	Cent	0.1	1.3	0.5	1.5	-0.1	69.21
	533	0.2	0.7	0.5	1.0	-0.2	58.81
	534	0.1	1.0	0.7	1.4	-0.3	60.48
	542	0.2	2.3	0.5	2.5	0.1	77.38
	541	0.6	1.3	0.3	1.5	0.5	68.46

	NODE	Vxx	Vyy
	Cent	0.8	2.0
	533	0.4	1.4
	534	0.4	2.6
	542	1.1	2.6
	541	1.1	1.4

LC		NODE	Fxx	Fyy	Fxy	Fmax	Fmin	ANGLE
RC ENV~1	Max	Cent	0.1	2.0	1.8	2.2	-0.1	58.39
		533	-0.1	2.0	1.8	2.1	-0.3	59.16
		534	-0.1	2.0	1.8	2.2	-0.2	60.23
		542	0.3	2.0	1.8	2.3	0.1	58.31
		541	0.3	2.0	1.8	2.2	0.1	57.17
	Min	Cent	-3.2	0.3	-1.9	0.4	-3.2	-78.84
		533	-3.3	0.5	-1.9	0.6	-3.3	-78.61
		534	-3.3	0.2	-1.9	0.3	-3.3	-77.41
		542	-3.2	0.2	-1.9	0.3	-3.2	-79.10
		541	-3.2	0.5	-1.9	0.5	-3.2	-80.02

	NODE	Mxx	Myy	Mxy	Mmax	Mmin	ANGLE
Max	Cent	-2.6	0.7	-0.8	1.0	-3.0	-62.91
	533	-2.6	0.5	-0.5	0.9	-2.8	-67.57
	534	-2.0	-0.0	-0.7	0.6	-2.6	-55.46
	542	-2.0	1.6	-1.1	1.8	-2.7	-79.97
	541	-3.6	0.7	-1.0	0.9	-3.8	-68.29
Min	Cent	-7.9	-3.0	-5.1	-1.1	-10.9	-65.11
	533	-8.1	-2.3	-4.5	-0.6	-10.4	-79.67
	534	-6.6	-3.8	-5.0	-1.3	-10.3	-73.88
	542	-7.5	-3.1	-5.6	-1.7	-10.9	-56.71

541	-9.8	-2.7	-5.1	-1.4	-12.3	-72.34

	NODE	Vxx	Vyy
Max	Cent	-0.4	1.9
	533	-0.3	1.8
	534	-0.3	2.1
	542	-0.3	2.1
	541	-0.3	1.8
Min	Cent	-5.7	-2.1
	533	-4.9	-1.0
	534	-4.9	-3.2
	542	-6.4	-3.2
	541	-6.4	-1.0

LC		NODE	Fxx	Fyy	Fxy	Fmax	Fmin	ANGLE
RC ENV~2	Max	Cent	-0.4	1.4	0.1	1.4	-0.4	89.57
		533	-0.4	1.4	0.1	1.4	-0.4	89.57
		534	-0.4	1.5	0.1	1.5	-0.4	89.57
		542	-0.4	1.5	0.1	1.5	-0.5	89.57
		541	-0.4	1.4	0.1	1.4	-0.5	89.56
	Min	Cent	-2.3	0.6	-0.1	0.6	-2.3	-84.84
		533	-2.3	0.6	-0.1	0.6	-2.3	-84.76
		534	-2.3	0.6	-0.1	0.6	-2.3	-84.64
		542	-2.3	0.6	-0.1	0.6	-2.3	-84.91
		541	-2.3	0.6	-0.1	0.6	-2.3	-85.02

	NODE	Mxx	Myy	Mxy	Mmax	Mmin	ANGLE
Max	Cent	-5.0	-0.5	-1.4	0.6	-5.4	-64.60
	533	-5.1	-0.1	-1.1	0.6	-5.3	-69.33
	534	-4.0	-0.9	-1.4	0.3	-4.7	-57.44
	542	-4.4	-0.6	-1.6	1.0	-5.2	-60.72
	541	-6.0	-0.4	-1.3	0.6	-6.3	-69.68
Min	Cent	-5.9	-2.0	-3.5	-0.4	-7.8	-64.35
	533	-6.0	-1.5	-3.0	-0.3	-7.5	-68.67
	534	-5.0	-2.6	-3.4	-0.6	-7.3	-58.95
	542	-5.5	-2.1	-3.9	-0.2	-7.8	-70.19
	541	-7.3	-1.8	-3.5	-0.5	-8.9	-68.47

	NODE	Vxx	Vyy
Max	Cent	-1.9	-0.1
	533	-1.6	0.4
	534	-1.6	-0.5
	542	-2.2	-0.5
	541	-2.2	0.4
Min	Cent	-4.0	-1.0
	533	-3.5	-0.2
	534	-3.5	-1.8
	542	-4.6	-1.8
	541	-4.6	-0.2

ELEM	MAT	SEC	LC		NODE	Fxx	Fyy	Fxy	Fmax	Fmin	ANGLE
498	1	1	SX (RS)		Cent	0.6	0.5	0.5	1.0	0.0	42.58
					534	0.6	0.5	0.5	1.0	0.1	43.75
					535	0.6	0.4	0.5	1.0	0.0	40.73
					543	0.6	0.4	0.5	1.0	0.0	41.47
					542	0.6	0.5	0.5	1.0	0.1	44.51

	NODE	Mxx	Myy	Mxy	Mmax	Mmin	ANGLE
	Cent	2.3	0.5	0.1	2.3	0.5	2.30
	534	2.4	0.8	0.0	2.4	0.8	1.46
	535	1.7	0.7	0.2	1.7	0.7	12.79
	543	2.3	0.5	0.1	2.3	0.5	4.59
	542	3.0	0.4	0.1	3.0	0.4	3.12

	NODE	Vxx	Vyy
	Cent	1.3	0.8
	534	1.4	1.3
	535	1.4	0.2
	543	1.3	0.2
	542	1.3	1.3

LC		NODE	Fxx	Fyy	Fxy	Fmax	Fmin	ANGLE
SY (RS)		Cent	0.1	0.7	1.7	2.1	-1.3	50.48
		534	0.1	0.3	1.7	1.8	-1.5	47.26
		535	0.1	1.2	1.7	2.4	-1.1	54.54
		543	0.2	1.2	1.7	2.4	-1.0	53.16
		542	0.2	0.3	1.7	1.9	-1.4	45.75

		NODE	Mxx	Myy	Mxy	Mmax	Mmin	ANGLE
		Cent	0.3	1.8	0.9	2.2	-0.1	64.85
		534	0.1	0.9	0.8	1.4	-0.4	59.16
		535	0.5	0.7	0.9	1.5	-0.3	49.33
		543	1.1	3.1	0.8	3.4	0.8	69.98
		542	0.3	2.2	0.7	2.5	0.0	71.33

		NODE	Vxx	Vyy
		Cent	1.5	3.5
		534	0.8	2.6
		535	0.8	4.3
		543	2.2	4.3
		542	2.2	2.6

LC		NODE	Fxx	Fyy	Fxy	Fmax	Fmin	ANGLE
RC ENV~1	Max	Cent	-0.4	2.0	1.6	2.4	-0.5	63.48
		534	-0.4	2.1	1.6	2.1	-0.5	89.90
		535	-0.4	2.0	1.6	2.8	-0.5	66.11
		543	-0.4	2.0	1.6	2.8	-0.5	65.17
		542	-0.4	2.1	1.6	2.1	-0.5	60.10
	Min	Cent	-3.1	0.1	-1.7	0.5	-3.1	-76.31
		534	-3.1	0.3	-1.7	0.4	-3.1	-76.13
		535	-3.1	-0.4	-1.7	0.5	-3.1	-76.71
		543	-3.1	-0.4	-1.7	0.5	-3.1	-76.47
		542	-3.1	0.3	-1.7	0.4	-3.1	-75.87

		NODE	Mxx	Myy	Mxy	Mmax	Mmin	ANGLE
	Max	Cent	-0.8	0.6	-0.9	2.7	-2.4	-45.29
		534	-1.3	0.1	-0.7	1.6	-2.3	-51.10
		535	-0.9	-1.3	-0.7	2.0	-2.4	-34.19
		543	0.4	2.1	-1.1	4.8	-1.3	-39.99
		542	-1.2	1.6	-1.2	2.9	-2.6	-55.26
	Min	Cent	-5.5	-4.0	-6.0	-0.9	-9.8	-68.14
		534	-6.1	-3.6	-5.3	-1.1	-9.7	-72.67
		535	-4.3	-5.9	-5.5	-1.5	-9.9	-56.95
		543	-4.4	-4.2	-6.5	-0.8	-9.3	-40.15
		542	-7.2	-2.9	-6.3	-0.9	-10.8	-53.34

		NODE	Vxx	Vyy
	Max	Cent	-1.7	2.4
		534	-1.0	2.1
		535	-1.0	2.7
		543	-1.8	2.7
		542	-1.8	2.1
	Min	Cent	-7.5	-4.6
		534	-5.7	-3.2
		535	-5.7	-5.9
		543	-9.2	-5.9
		542	-9.2	-3.2

LC		NODE	Fxx	Fyy	Fxy	Fmax	Fmin	ANGLE
RC ENV~2	Max	Cent	-0.5	1.5	0.0	1.5	-0.5	89.92
		534	-0.5	1.5	0.0	1.5	-0.5	89.92
		535	-0.5	1.4	0.0	1.4	-0.5	89.92
		543	-0.5	1.4	0.0	1.4	-0.5	89.92
		542	-0.5	1.5	0.0	1.5	-0.5	89.92
	Min	Cent	-2.2	0.6	-0.1	0.6	-2.2	-85.65
		534	-2.2	0.6	-0.1	0.6	-2.2	-85.66
		535	-2.2	0.6	-0.1	0.6	-2.2	-85.78
		543	-2.2	0.6	-0.1	0.6	-2.2	-85.64
		542	-2.2	0.6	-0.1	0.6	-2.2	-85.52

	NODE	Mxx	Myy	Mxy	Mmax	Mmin	ANGLE
Max	Cent	-1.9	-1.0	-1.8	1.7	-4.0	-46.71
	534	-2.9	-0.7	-1.5	1.0	-4.2	-52.95
	535	-1.0	-2.0	-1.5	1.1	-3.8	-35.25
	543	0.0	-0.9	-2.0	3.1	-3.4	-41.00
	542	-3.5	-0.5	-1.9	1.9	-4.9	-56.65
Min	Cent	-3.4	-2.8	-4.1	-0.2	-6.9	-59.60
	534	-4.1	-2.4	-3.6	-0.3	-6.8	-66.57
	535	-2.7	-4.1	-3.8	-0.7	-6.9	-50.20
	543	-2.2	-2.6	-4.5	0.4	-6.5	-51.99
	542	-4.8	-2.0	-4.3	0.2	-7.7	-66.15

	NODE	Vxx	Vyy
Max	Cent	-3.2	-1.1
	534	-2.4	-0.5
	535	-2.4	-1.6
	543	-4.0	-1.6
	542	-4.0	-0.5
Min	Cent	-5.4	-2.6
	534	-4.1	-1.8
	535	-4.1	-3.5
	543	-6.6	-3.5
	542	-6.6	-1.8

ELEM	MAT	SEC	LC	NODE	Fxx	Fyy	Fxy	Fmax	Fmin	ANGLE
499	1	1	SX (RS)	Cent	0.3	0.2	0.4	0.7	-0.2	42.99
				535	0.2	0.4	0.4	0.8	-0.2	53.33
				536	0.2	0.1	0.4	0.6	-0.3	41.93
				544	0.5	0.1	0.4	0.8	-0.2	32.23
				543	0.5	0.4	0.4	0.9	0.0	42.96

	NODE	Mxx	Myy	Mxy	Mmax	Mmin	ANGLE
	Cent	1.3	0.2	0.7	1.7	-0.1	25.89
	535	1.5	0.8	0.3	1.6	0.7	18.77
	536	0.0	0.0	0.8	0.8	-0.8	44.68
	544	2.0	0.4	1.2	2.6	-0.2	28.08
	543	2.0	0.5	0.6	2.3	0.3	20.27

	NODE	Vxx	Vyy
	Cent	1.8	0.1
	535	2.9	0.2
	536	2.9	0.0
	544	1.1	0.0
	543	1.1	0.2

LC	NODE	Fxx	Fyy	Fxy	Fmax	Fmin	ANGLE
SY (RS)	Cent	0.4	1.4	0.7	1.7	0.0	63.18
	535	0.1	1.1	0.7	1.5	-0.3	64.19
	536	0.1	1.6	0.7	1.9	-0.2	69.35
	544	0.7	1.6	0.7	2.0	0.3	62.08
	543	0.7	1.1	0.7	1.6	0.2	54.21

	NODE	Mxx	Myy	Mxy	Mmax	Mmin	ANGLE
	Cent	1.2	1.9	0.5	2.2	1.0	62.63
	535	0.4	0.7	0.6	1.2	-0.1	52.44
	536	0.6	0.5	0.2	0.8	0.3	37.52
	544	2.3	3.2	0.3	3.3	2.2	73.65
	543	1.7	3.2	0.7	3.5	1.4	68.43

	NODE	Vxx	Vyy
	Cent	0.8	4.5
	535	0.5	4.3
	536	0.5	4.6
	544	1.1	4.6
	543	1.1	4.3

LC	NODE	Fxx	Fyy	Fxy	Fmax	Fmin	ANGLE

RC ENV~1	Max	Cent	-0.6	2.2	0.7	2.4	-0.7	77.11
		535	-0.7	2.0	0.7	2.1	-0.7	77.46
		536	-0.7	2.4	0.7	2.6	-0.7	79.03
		544	-0.3	2.4	0.7	2.6	-0.5	76.74
		543	-0.3	2.0	0.7	2.2	-0.5	74.45
	Min	Cent	-2.9	-0.6	-0.7	-0.2	-2.9	-59.90
		535	-3.0	-0.3	-0.7	0.1	-3.0	-58.87
		536	-3.0	-0.8	-0.7	-0.2	-3.0	-50.11
		544	-2.9	-0.8	-0.7	-0.4	-2.9	-60.92
		543	-2.9	-0.3	-0.7	-0.0	-2.9	-67.01

	NODE	Mxx	Myy	Mxy	Mmax	Mmin	ANGLE
Max	Cent	2.1	0.3	-0.8	4.5	-0.9	-28.41
	535	0.4	-1.1	-0.9	2.9	-2.1	-30.65
	536	1.9	-2.1	-0.4	3.3	-2.7	-21.08
	544	4.8	2.0	-0.3	6.7	0.8	-25.80
	543	1.7	2.3	-1.0	5.4	-0.3	-36.42
Min	Cent	-2.6	-5.1	-5.5	-1.0	-8.7	-37.74
	535	-3.5	-5.7	-5.4	-1.3	-9.3	-51.72
	536	-2.0	-7.4	-4.9	-1.3	-9.7	-17.11
	544	-2.5	-4.4	-5.6	-1.4	-7.8	-30.90
	543	-3.6	-4.2	-6.1	-1.1	-8.4	-39.50

	NODE	Vxx	Vyy
Max	Cent	-0.1	2.6
	535	1.5	2.7
	536	1.5	2.4
	544	-1.3	2.4
	543	-1.3	2.7
Min	Cent	-4.4	-6.3
	535	-4.2	-5.9
	536	-4.2	-6.7
	544	-5.7	-6.7
	543	-5.7	-5.9

LC		NODE	Fxx	Fyy	Fxy	Fmax	Fmin	ANGLE
RC ENV~2	Max	Cent	-0.6	1.4	0.0	1.4	-0.6	89.77
		535	-0.6	1.5	0.0	1.5	-0.6	89.77
		536	-0.6	1.4	0.0	1.4	-0.6	89.77
		544	-0.6	1.4	0.0	1.4	-0.6	89.76
		543	-0.6	1.5	0.0	1.5	-0.6	89.77
	Min	Cent	-2.1	0.7	-0.1	0.7	-2.1	-87.16
		535	-2.1	0.6	-0.1	0.6	-2.1	-87.00
		536	-2.1	0.7	-0.1	0.7	-2.1	-88.19
		544	-2.0	0.7	-0.1	0.7	-2.0	-88.20
		543	-2.0	0.6	-0.1	0.6	-2.0	-87.10

	NODE	Mxx	Myy	Mxy	Mmax	Mmin	ANGLE
Max	Cent	1.2	-1.6	-1.5	2.9	-2.8	-29.05
	535	-0.0	-1.8	-1.5	1.8	-3.3	-31.52
	536	1.0	-2.6	-1.2	2.0	-3.3	-21.38
	544	3.1	-1.1	-1.4	4.5	-2.0	-26.18
	543	0.9	-0.8	-1.7	3.5	-2.8	-37.35
Min	Cent	-1.3	-3.5	-3.8	0.0	-6.0	-41.44
	535	-2.0	-3.9	-3.7	-0.5	-6.5	-46.15
	536	-1.5	-5.1	-3.3	-0.7	-6.7	-32.44
	544	-0.3	-2.9	-3.8	0.8	-5.3	-35.28
	543	-1.5	-2.5	-4.2	0.5	-5.8	-49.39

	NODE	Vxx	Vyy
Max	Cent	-1.8	-1.9
	535	-1.3	-1.6
	536	-1.3	-2.1
	544	-2.4	-2.1
	543	-2.4	-1.6
Min	Cent	-3.2	-3.9
	535	-2.4	-3.5
	536	-2.4	-4.4
	544	-4.0	-4.4
	543	-4.0	-3.5

ELEM	MAT	SEC	LC		NODE	Fxx	Fyy	Fxy	Fmax	Fmin	ANGLE
500	1	1	SX	(RS)	Cent	0.8	1.1	1.0	1.9	-0.0	49.44
					170	1.3	1.4	1.0	2.3	0.3	46.36
					537	1.3	1.0	1.0	2.1	0.2	41.33
					545	0.5	1.0	1.0	1.8	-0.2	51.98
					173	0.5	1.4	1.0	2.0	-0.1	56.51

		NODE	Mxx	Myy	Mxy	Mmax	Mmin	ANGLE
		Cent	3.0	1.1	0.9	3.3	0.7	21.72
		170	4.2	1.4	0.3	4.2	1.3	5.74
		537	4.1	0.5	1.2	4.5	0.1	17.00
		545	7.6	3.2	1.2	7.9	2.9	14.20
		173	4.1	1.0	0.4	4.2	1.0	6.57

		NODE	Vxx	Vyy
		Cent	10.0	2.4
		170	0.4	0.3
		537	0.4	5.0
		545	19.6	5.0
		173	19.6	0.3

LC		NODE	Fxx	Fyy	Fxy	Fmax	Fmin	ANGLE
SY	(RS)	Cent	0.7	2.5	2.2	4.0	-0.8	55.59
		170	0.5	3.4	2.2	4.6	-0.7	61.65
		537	0.5	1.5	2.2	3.3	-1.3	51.43
		545	1.1	1.5	2.2	3.5	-0.9	47.58
		173	1.1	3.4	2.2	4.7	-0.2	58.70

		NODE	Mxx	Myy	Mxy	Mmax	Mmin	ANGLE
		Cent	1.2	3.0	0.9	3.4	0.8	68.57
		170	1.1	1.6	0.7	2.1	0.6	53.71
		537	0.9	2.2	0.9	2.7	0.4	62.65
		545	1.3	3.3	0.9	3.6	1.0	69.81
		173	3.6	5.2	0.7	5.4	3.3	70.75

		NODE	Vxx	Vyy
		Cent	3.9	4.4
		170	0.6	6.1
		537	0.6	2.9
		545	7.4	2.9
		173	7.4	6.1

LC		NODE	Fxx	Fyy	Fxy	Fmax	Fmin	ANGLE
RC ENV~1	Max	Cent	0.3	2.9	2.6	4.5	-0.3	58.78
		170	0.5	4.0	2.6	5.2	-0.3	64.66
		537	0.5	1.8	2.6	3.6	-0.1	56.10
		545	0.8	1.8	2.6	3.9	-0.4	50.68
		173	0.8	4.0	2.6	5.4	-0.4	60.73
	Min	Cent	-1.7	-2.0	-1.9	-0.3	-3.5	-59.21
		170	-2.7	-2.8	-1.9	-0.6	-4.1	-67.33
		537	-2.7	-1.2	-1.9	-0.4	-3.5	-68.71
		545	-1.4	-1.2	-1.9	-0.1	-3.1	-48.45
		173	-1.4	-2.8	-1.9	-0.2	-4.1	-45.60

		NODE	Mxx	Myy	Mxy	Mmax	Mmin	ANGLE
	Max	Cent	8.9	4.2	1.4	9.0	3.5	-6.17
		170	12.7	2.1	1.2	12.7	1.8	-1.25
		537	6.8	2.2	1.5	7.1	1.4	13.07
		545	12.5	7.3	1.8	12.8	7.3	14.65
		173	9.3	6.8	1.4	9.5	6.1	8.99
	Min	Cent	1.9	-1.9	-1.4	2.0	-1.9	-13.32
		170	2.7	-1.0	-1.1	2.7	-1.1	2.35
		537	-1.4	-2.2	-1.7	0.0	-2.3	-58.40
		545	-2.9	-0.6	-1.3	-0.4	-3.0	-77.08
		173	1.0	-3.6	-0.8	1.2	-3.6	29.07

		NODE	Vxx	Vyy
	Max	Cent	14.3	0.9

		170	11.4	3.3
		537	11.4	0.6
		545	20.8	0.6
		173	20.8	3.3
	Min	Cent	-5.7	-10.0
		170	6.8	-8.8
		537	6.8	-13.3
		545	-18.4	-13.3
		173	-18.4	-8.8

LC		NODE	Fxx	Fyy	Fxy	Fmax	Fmin	ANGLE
RC ENV~2	Max	Cent	-0.1	0.6	1.2	1.1	-0.2	62.65
		170	0.1	0.9	1.2	1.4	-0.2	69.86
		537	0.1	0.6	1.2	0.7	-0.1	-65.41
		545	-0.2	0.6	1.2	1.0	-0.3	51.64
		173	-0.2	0.9	1.2	1.6	-0.3	60.26
	Min	Cent	-1.2	0.4	-0.3	0.4	-1.8	-87.22
		170	-1.9	0.2	-0.3	0.3	-2.3	-86.93
		537	-1.9	0.0	-0.3	0.4	-2.4	72.71
		545	-0.6	0.0	-0.3	0.5	-1.4	72.91
		173	-0.6	0.2	-0.3	0.3	-1.2	-86.97

		NODE	Mxx	Myy	Mxy	Mmax	Mmin	ANGLE
	Max	Cent	6.6	1.7	0.5	6.7	1.7	-4.22
		170	9.4	0.6	0.5	9.4	0.6	-0.36
		537	4.6	-0.0	0.4	4.7	-0.1	-7.44
		545	9.0	5.3	0.7	9.0	5.3	-3.66
		173	6.1	1.8	0.8	6.1	1.7	0.75
	Min	Cent	3.0	0.2	-0.8	3.1	0.1	2.03
		170	4.8	-0.3	-0.6	4.8	-0.4	-2.09
		537	0.5	-0.8	-1.0	0.5	-1.0	6.01
		545	0.8	0.5	-0.7	1.0	0.3	31.46
		173	3.5	0.7	-0.4	3.6	0.7	10.40

		NODE	Vxx	Vyy
	Max	Cent	8.4	-1.6
		170	8.5	-1.9
		537	8.5	-1.4
		545	9.2	-1.4
		173	9.2	-1.9
	Min	Cent	-0.2	-7.2
		170	7.4	-4.9
		537	7.4	-9.4
		545	-8.6	-9.4
		173	-8.6	-4.9

ELEM	MAT	SEC	LC		NODE	Fxx	Fyy	Fxy	Fmax	Fmin	ANGLE
501	1	1	SX (RS)		Cent	2.1	0.8	1.3	2.9	0.0	31.74
					537	1.1	1.2	1.3	2.4	-0.1	45.77
					538	1.1	0.7	1.3	2.2	-0.4	40.02
					546	3.1	0.7	1.3	3.7	0.1	22.91
					545	3.1	1.2	1.3	3.8	0.6	26.22

		NODE	Mxx	Myy	Mxy	Mmax	Mmin	ANGLE
		Cent	5.2	1.4	0.3	5.3	1.4	4.60
		537	4.3	0.5	0.3	4.4	0.5	3.73
		538	4.7	0.9	0.4	4.8	0.8	5.90
		546	4.8	1.6	0.4	4.9	1.6	7.35
		545	7.0	3.1	0.3	7.1	3.0	4.74

		NODE	Vxx	Vyy
		Cent	1.6	3.2
		537	0.6	5.0
		538	0.6	1.4
		546	3.4	1.4
		545	3.4	5.0

LC		NODE	Fxx	Fyy	Fxy	Fmax	Fmin	ANGLE
SY (RS)		Cent	0.8	0.7	2.7	3.5	-2.0	44.81

```
                537        0.3        1.7        2.7        3.8       -1.8       52.52
                538        0.3        0.3        2.7        3.0       -2.4       44.87
                546        1.4        0.3        2.7        3.6       -2.0       39.14
                545        1.4        1.7        2.7        4.3       -1.2       46.89

              NODE        Mxx        Myy        Mxy       Mmax       Mmin      ANGLE
         ---- ------ ---------- ---------- ---------- ---------- ---------- ----------
              Cent        0.7        2.3        0.5        2.4        0.5      74.26
                537        0.7        2.1        0.6        2.4        0.4      69.90
                538        0.4        1.6        0.5        1.8        0.3      70.21
                546        0.8        1.7        0.4        1.9        0.7      67.64
                545        1.8        3.7        0.6        3.9        1.7      74.14

              NODE        Vxx        Vyy
         ---- ------ ---------- ----------
              Cent        2.1        1.6
                537        1.1        2.9
                538        1.1        0.3
                546        3.1        0.3
                545        3.1        2.9


       LC        NODE        Fxx        Fyy        Fxy       Fmax       Fmin      ANGLE
-------- ---- ------ ---------- ---------- ---------- ---------- ---------- ----------
RC ENV~1  Max   Cent        0.9        1.3        3.2        3.7       -0.1      52.05
                537        0.4        1.9        3.2        4.1       -0.4      55.34
                538        0.4        1.7        3.2        3.5       -0.4      51.28
                546        1.5        1.7        3.2        3.6        0.1      50.35
                545        1.5        1.9        3.2        4.2        0.3      54.48
          Min   Cent       -4.4       -0.4       -2.3       -0.2       -5.2     -75.44
                537       -2.5       -1.5       -2.3       -0.5       -3.8     -59.15
                538       -2.5        0.0       -2.3        0.3       -3.4     -69.72
                546       -6.3        0.0       -2.3        0.2       -6.9     -80.69
                545       -6.3       -1.5       -2.3       -0.8       -7.1     -78.42

              NODE        Mxx        Myy        Mxy       Mmax       Mmin      ANGLE
         ---- ------ ---------- ---------- ---------- ---------- ---------- ----------
          Max   Cent        6.0        3.1        1.5        6.4        1.8      17.60
                537        6.8        2.1        1.5        7.0        1.0       9.94
                538        3.6        2.2        1.3        4.1        0.8      24.48
                546        2.5        2.3        1.4        3.7        0.9      40.34
                545       10.9        6.9        1.6       11.2        6.6      13.25
          Min   Cent       -4.5       -1.4       -0.8       -0.6       -4.6     -85.57
                537       -1.9       -2.2       -0.8       -0.3       -2.2      67.73
                538       -5.9       -1.1       -1.2       -0.9       -5.9      62.26
                546       -7.1       -1.4       -1.0       -1.4       -7.2     -86.24
                545       -3.2       -1.2       -0.7       -0.4       -3.3      76.29

              NODE        Vxx        Vyy
         ---- ------ ---------- ----------
          Max   Cent       15.8        0.9
                537       10.9        0.6
                538       10.9        1.1
                546       20.7        1.1
                545       20.7        0.6
          Min   Cent        6.4       -8.1
                537        5.6      -13.3
                538        5.6       -2.8
                546        6.9       -2.8
                545        6.9      -13.3


       LC        NODE        Fxx        Fyy        Fxy       Fmax       Fmin      ANGLE
-------- ---- ------ ---------- ---------- ---------- ---------- ---------- ----------
RC ENV~2  Max   Cent        0.2        0.7        1.5        1.0       -0.1      70.86
                537       -0.1        0.6        1.5        0.8       -0.3     -66.33
                538       -0.1        1.2        1.5        1.8       -0.3      68.36
                546        0.5        1.2        1.5        1.6        0.1      76.51
                545        0.5        0.6        1.5        1.0        0.2     -48.92
          Min   Cent       -3.1        0.3       -0.4        0.5       -3.6     -86.10
                537       -1.7       -0.3       -0.4        0.4       -2.7      67.34
                538       -1.7        0.5       -0.4        0.5       -2.4     -86.37
                546       -4.4        0.5       -0.4        0.5       -4.8     -86.24
                545       -4.4       -0.3       -0.4        0.2       -4.9      71.45

              NODE        Mxx        Myy        Mxy       Mmax       Mmin      ANGLE
         ---- ------ ---------- ---------- ---------- ---------- ---------- ----------
          Max   Cent        2.8        1.7        1.2        3.2        1.2      26.79
                537        4.4       -0.1        1.0        4.5       -0.3       6.24
```

		538	0.3	0.9	1.0	1.4	-0.1	61.84
		546	-1.2	1.6	1.1	1.9	-1.3	74.95
		545	7.6	5.0	1.1	7.7	4.7	12.75
	Min	Cent	-1.9	-0.3	-0.4	-0.3	-1.9	87.24
		537	0.2	-0.8	-0.4	0.3	-0.8	10.36
		538	-3.5	-0.4	-0.6	-0.3	-3.5	-78.35
		546	-4.6	-0.8	-0.5	-0.8	-4.6	-89.57
		545	0.3	0.4	-0.2	0.6	0.1	50.82

	NODE	Vxx	Vyy
Max	Cent	11.6	-0.4
	537	8.1	-1.4
	538	8.1	0.6
	546	15.1	0.6
	545	15.1	-1.4
Min	Cent	7.5	-5.7
	537	6.6	-9.4
	538	6.6	-1.9
	546	8.3	-1.9
	545	8.3	-9.4

ELEM	MAT	SEC	LC		NODE	Fxx	Fyy	Fxy	Fmax	Fmin	ANGLE
502	1	1	SX	(RS)	Cent	1.9	0.6	0.6	2.2	0.4	20.66
					538	1.6	0.7	0.6	1.9	0.4	26.79
					539	1.6	0.4	0.6	1.9	0.2	22.83
					547	2.3	0.4	0.6	2.5	0.3	16.47
					546	2.3	0.7	0.6	2.5	0.5	18.74

	NODE	Mxx	Myy	Mxy	Mmax	Mmin	ANGLE
	Cent	4.1	1.2	0.4	4.1	1.1	7.79
	538	4.5	0.8	0.4	4.5	0.8	6.00
	539	3.7	1.0	0.3	3.7	1.0	6.39
	547	3.4	1.3	0.4	3.5	1.2	10.34
	546	4.7	1.6	0.5	4.8	1.5	8.51

	NODE	Vxx	Vyy
	Cent	2.1	1.1
	538	1.7	1.4
	539	1.7	0.7
	547	2.4	0.7
	546	2.4	1.4

LC		NODE	Fxx	Fyy	Fxy	Fmax	Fmin	ANGLE
SY	(RS)	Cent	0.6	0.2	2.0	2.5	-1.7	42.50
		538	0.5	0.3	2.0	2.5	-1.6	43.58
		539	0.5	0.2	2.0	2.4	-1.7	42.57
		547	0.7	0.2	2.0	2.5	-1.6	41.26
		546	0.7	0.3	2.0	2.6	-1.6	42.26

	NODE	Mxx	Myy	Mxy	Mmax	Mmin	ANGLE
	Cent	0.4	1.5	0.3	1.6	0.3	75.06
	538	0.4	1.7	0.3	1.8	0.3	76.32
	539	0.4	1.1	0.3	1.2	0.3	71.19
	547	0.4	1.4	0.3	1.5	0.3	73.31
	546	0.6	1.8	0.4	1.9	0.5	74.57

	NODE	Vxx	Vyy
	Cent	0.4	0.4
	538	0.6	0.3
	539	0.6	0.5
	547	0.4	0.5
	546	0.4	0.3

LC		NODE	Fxx	Fyy	Fxy	Fmax	Fmin	ANGLE
RC ENV~1	Max	Cent	0.8	1.7	2.2	2.5	0.2	54.51
		538	0.6	1.7	2.2	2.6	0.1	54.52
		539	0.6	1.7	2.2	2.5	0.0	53.80
		547	1.0	1.7	2.2	2.5	0.3	54.37

		546	1.0	1.7	2.2	2.6	0.4	55.08
	Min	Cent	-4.1	0.1	-1.9	0.2	-4.2	-82.62
		538	-3.5	-0.0	-1.9	0.1	-3.6	-80.95
		539	-3.5	0.3	-1.9	0.4	-3.6	-81.85
		547	-4.8	0.3	-1.9	0.3	-4.9	-83.80
		546	-4.8	-0.0	-1.9	0.0	-4.9	-83.28

		NODE	Mxx	Myy	Mxy	Mmax	Mmin	ANGLE
	Max	Cent	0.7	1.7	0.8	1.9	0.1	55.97
		538	3.0	2.1	1.0	3.4	0.8	24.64
		539	-0.8	1.3	0.6	1.4	-0.9	84.39
		547	-2.1	0.9	0.7	1.0	-2.3	84.41
		546	2.7	2.4	1.1	3.5	1.3	37.74
	Min	Cent	-7.7	-1.5	-1.9	-1.3	-8.0	87.30
		538	-6.1	-1.2	-1.6	-1.2	-6.1	72.90
		539	-8.9	-1.3	-2.1	-0.9	-9.3	-89.55
		547	-10.7	-2.5	-2.1	-2.1	-11.1	-80.35
		546	-6.8	-1.4	-1.6	-1.2	-6.8	81.24

		NODE	Vxx	Vyy
	Max	Cent	10.4	1.4
		538	9.5	1.1
		539	9.5	1.8
		547	11.3	1.8
		546	11.3	1.1
	Min	Cent	3.5	-1.4
		538	3.4	-2.8
		539	3.4	0.1
		547	3.5	0.1
		546	3.5	-2.8

LC		NODE	Fxx	Fyy	Fxy	Fmax	Fmin	ANGLE
RC ENV~2	Max	Cent	0.1	1.3	0.6	1.3	-0.0	82.39
		538	-0.0	1.3	0.6	1.3	-0.1	81.63
		539	-0.0	1.2	0.6	1.3	-0.1	81.58
		547	0.2	1.2	0.6	1.3	0.1	83.03
		546	0.2	1.3	0.6	1.3	0.1	83.06
	Min	Cent	-2.9	0.5	-0.2	0.6	-3.0	-86.71
		538	-2.5	0.4	-0.2	0.5	-2.6	-69.25
		539	-2.5	0.6	-0.2	0.6	-2.6	-86.90
		547	-3.3	0.6	-0.2	0.6	-3.4	-86.84
		546	-3.3	0.4	-0.2	0.5	-3.4	-86.50

		NODE	Mxx	Myy	Mxy	Mmax	Mmin	ANGLE
	Max	Cent	-2.7	0.9	0.6	0.9	-2.7	87.35
		538	-0.3	0.8	0.7	0.9	-0.4	77.12
		539	-4.0	0.7	0.4	0.7	-4.1	-88.74
		547	-5.4	0.3	0.4	0.3	-5.4	-89.38
		546	-0.9	1.7	0.7	1.7	-0.9	82.09
	Min	Cent	-5.5	-0.9	-1.1	-0.8	-5.6	-82.75
		538	-3.7	-0.5	-0.9	-0.3	-3.8	-82.79
		539	-6.5	-0.8	-1.3	-0.6	-6.7	-82.38
		547	-7.8	-1.7	-1.3	-1.5	-8.0	-82.45
		546	-4.4	-0.8	-0.9	-0.7	-4.5	-83.18

		NODE	Vxx	Vyy
	Max	Cent	7.7	1.0
		538	7.0	0.6
		539	7.0	1.3
		547	8.3	1.3
		546	8.3	0.6
	Min	Cent	4.6	-0.9
		538	4.4	-1.9
		539	4.4	0.2
		547	4.8	0.2
		546	4.8	-1.9

ELEM	MAT	SEC	LC		NODE	Fxx	Fyy	Fxy	Fmax	Fmin	ANGLE
503	1	1	SX (RS)		Cent	1.7	0.4	0.4	1.8	0.3	15.29
					539	1.5	0.5	0.4	1.7	0.4	18.00
					540	1.5	0.3	0.4	1.7	0.2	15.84

548	1.8	0.3	0.4	1.9	0.2	13.24
547	1.8	0.5	0.4	2.0	0.4	14.78

NODE	Mxx	Myy	Mxy	Mmax	Mmin	ANGLE
Cent	3.1	1.0	0.2	3.1	1.0	5.26
539	3.6	1.0	0.2	3.6	0.9	5.28
540	2.8	0.8	0.2	2.8	0.8	5.32
548	2.6	0.9	0.1	2.6	0.9	4.75
547	3.5	1.3	0.2	3.6	1.3	5.57

NODE	Vxx	Vyy
Cent	1.9	0.5
539	1.9	0.7
540	1.9	0.4
548	2.0	0.4
547	2.0	0.7

LC		NODE	Fxx	Fyy	Fxy	Fmax	Fmin	ANGLE
SY (RS)		Cent	0.4	0.2	1.8	2.1	-1.5	43.77
		539	0.3	0.2	1.8	2.1	-1.6	44.09
		540	0.3	0.3	1.8	2.1	-1.5	44.71
		548	0.5	0.3	1.8	2.2	-1.5	43.41
		547	0.5	0.2	1.8	2.2	-1.5	42.79

NODE	Mxx	Myy	Mxy	Mmax	Mmin	ANGLE
Cent	0.3	1.3	0.3	1.3	0.2	76.37
539	0.4	1.2	0.2	1.2	0.3	75.73
540	0.2	1.1	0.2	1.2	0.2	78.84
548	0.2	1.4	0.3	1.5	0.2	76.90
547	0.4	1.5	0.3	1.5	0.3	73.92

NODE	Vxx	Vyy
Cent	0.2	0.5
539	0.2	0.5
540	0.2	0.5
548	0.3	0.5
547	0.3	0.5

LC		NODE	Fxx	Fyy	Fxy	Fmax	Fmin	ANGLE
RC ENV~1	Max	Cent	0.6	1.8	1.9	2.2	0.4	57.28
		539	0.5	1.8	1.9	2.1	0.3	57.11
		540	0.5	1.9	1.9	2.2	0.3	57.89
		548	0.7	1.9	1.9	2.3	0.4	57.42
		547	0.7	1.8	1.9	2.2	0.5	56.63
	Min	Cent	-3.7	0.4	-1.8	0.4	-3.7	-83.85
		539	-3.5	0.3	-1.8	0.3	-3.5	-83.21
		540	-3.5	0.5	-1.8	0.5	-3.5	-83.70
		548	-3.9	0.5	-1.8	0.5	-3.9	-84.39
		547	-3.9	0.3	-1.8	0.3	-3.9	-84.00

NODE		Mxx	Myy	Mxy	Mmax	Mmin	ANGLE
	Max	Cent	-2.6	1.0	0.0	1.0	-2.6	89.75
		539	-1.0	1.3	0.2	1.3	-1.0	88.45
		540	-3.2	1.1	-0.2	1.1	-3.3	-88.44
		548	-4.4	0.5	-0.1	0.5	-4.4	-89.20
		547	-1.8	1.0	0.2	1.0	-1.8	87.69
	Min	Cent	-10.7	-2.1	-2.9	-1.5	-11.5	-83.96
		539	-9.0	-1.3	-2.7	-1.0	-9.7	-85.91
		540	-10.8	-1.7	-3.2	-1.2	-11.7	-83.83
		548	-12.4	-2.8	-3.2	-2.2	-13.3	-82.22
		547	-10.6	-2.5	-2.7	-1.9	-11.2	-77.55

NODE		Vxx	Vyy
	Max	Cent	5.1	1.8
		539	4.9	1.8
		540	4.9	1.8
		548	5.3	1.8
		547	5.3	1.8
	Min	Cent	0.7	0.5

		539	0.7	0.1			
		540	0.7	0.7			
		548	0.7	0.7			
		547	0.7	0.1			

LC		NODE	Fxx	Fyy	Fxy	Fmax	Fmin	ANGLE
RC ENV~2	Max	Cent	-0.1	1.3	0.2	1.3	-0.1	87.09
		539	-0.2	1.3	0.2	1.3	-0.2	86.96
		540	-0.2	1.4	0.2	1.4	-0.2	87.01
		548	-0.1	1.4	0.2	1.4	-0.1	87.21
		547	-0.1	1.3	0.2	1.3	-0.1	87.16
	Min	Cent	-2.6	0.6	-0.1	0.6	-2.6	-79.53
		539	-2.5	0.5	-0.1	0.6	-2.5	-79.57
		540	-2.5	0.6	-0.1	0.7	-2.5	-80.69
		548	-2.8	0.6	-0.1	0.7	-2.8	-79.49
		547	-2.8	0.5	-0.1	0.6	-2.8	-78.06

	NODE	Mxx	Myy	Mxy	Mmax	Mmin	ANGLE
Max	Cent	-5.6	0.2	-0.2	0.4	-5.6	-82.76
	539	-4.2	0.6	0.0	0.7	-4.3	-83.72
	540	-6.0	0.4	-0.3	0.5	-6.0	-81.42
	548	-6.9	-0.3	-0.3	-0.2	-6.9	-81.91
	547	-5.1	0.3	-0.0	0.4	-5.2	-84.27
Min	Cent	-7.8	-1.4	-1.9	-1.0	-8.3	-78.77
	539	-6.6	-0.8	-1.7	-0.5	-7.0	-79.37
	540	-7.9	-1.1	-2.1	-0.6	-8.5	-78.14
	548	-9.1	-2.0	-2.1	-1.5	-9.6	-78.28
	547	-7.7	-1.7	-1.7	-1.4	-8.1	-79.46

	NODE	Vxx	Vyy
Max	Cent	3.7	1.3
	539	3.6	1.3
	540	3.6	1.3
	548	3.9	1.3
	547	3.9	1.3
Min	Cent	1.9	0.5
	539	1.8	0.2
	540	1.8	0.8
	548	1.9	0.8
	547	1.9	0.2

ELEM	MAT	SEC	LC		NODE	Fxx	Fyy	Fxy	Fmax	Fmin	ANGLE
504	1	1	SX (RS)		Cent	1.6	0.3	0.5	1.7	0.1	17.90
					540	1.4	0.3	0.5	1.6	0.2	20.30
					541	1.4	0.2	0.5	1.6	0.0	18.64
					549	1.7	0.2	0.5	1.8	0.1	15.95
					548	1.7	0.3	0.5	1.8	0.2	17.21

	NODE	Mxx	Myy	Mxy	Mmax	Mmin	ANGLE
	Cent	2.5	0.8	0.2	2.5	0.8	8.07
	540	2.8	0.8	0.2	2.8	0.8	6.08
	541	2.4	0.7	0.3	2.5	0.6	9.97
	549	2.2	1.0	0.3	2.3	0.9	10.99
	548	2.7	1.0	0.2	2.7	0.9	4.99

	NODE	Vxx	Vyy
	Cent	2.1	0.7
	540	2.0	0.4
	541	2.0	1.0
	549	2.2	1.0
	548	2.2	0.4

LC		NODE	Fxx	Fyy	Fxy	Fmax	Fmin	ANGLE
SY (RS)		Cent	0.2	0.3	1.7	1.9	-1.4	45.53
		540	0.2	0.3	1.7	1.9	-1.4	45.83
		541	0.2	0.3	1.7	1.9	-1.4	45.66
		549	0.3	0.3	1.7	1.9	-1.4	45.08
		548	0.3	0.3	1.7	2.0	-1.4	45.25

	NODE	Mxx	Myy	Mxy	Mmax	Mmin	ANGLE
	Cent	0.3	1.5	0.2	1.5	0.3	80.69
	540	0.4	1.1	0.1	1.1	0.4	79.98
	541	0.2	1.5	0.1	1.6	0.2	85.36
	549	0.1	1.9	0.3	1.9	0.1	80.81
	548	0.4	1.4	0.3	1.5	0.4	73.92

	NODE	Vxx	Vyy
	Cent	0.3	0.6
	540	0.2	0.5
	541	0.2	0.6
	549	0.4	0.6
	548	0.4	0.5

LC		NODE	Fxx	Fyy	Fxy	Fmax	Fmin	ANGLE
RC ENV~1	Max	Cent	0.5	2.0	1.7	2.1	0.3	59.99
		540	0.4	1.9	1.7	2.0	0.2	60.11
		541	0.4	2.0	1.7	2.0	0.1	60.11
		549	0.6	2.0	1.7	2.1	0.3	59.75
		548	0.6	1.9	1.7	2.1	0.4	59.75
	Min	Cent	-3.4	0.5	-1.7	0.6	-3.4	-81.63
		540	-3.4	0.5	-1.7	0.5	-3.4	-81.04
		541	-3.4	0.5	-1.7	0.7	-3.4	-81.46
		549	-3.4	0.5	-1.7	0.7	-3.4	-82.15
		548	-3.4	0.5	-1.7	0.5	-3.4	-81.79

	NODE	Mxx	Myy	Mxy	Mmax	Mmin	ANGLE
Max	Cent	-4.0	1.0	-0.6	1.1	-4.1	-84.80
	540	-3.2	1.0	-0.5	1.1	-3.3	-85.11
	541	-3.7	1.4	-0.7	1.5	-3.8	-82.92
	549	-4.7	1.1	-0.7	1.2	-4.8	-84.83
	548	-4.3	0.5	-0.4	0.5	-4.4	-86.84
Min	Cent	-11.2	-2.2	-4.1	-1.7	-12.7	-78.17
	540	-10.7	-1.7	-3.8	-1.1	-12.0	-81.29
	541	-10.0	-1.9	-4.5	-1.4	-11.9	-76.73
	549	-11.6	-2.6	-4.5	-2.3	-13.3	-74.73
	548	-12.6	-2.9	-3.8	-2.1	-13.8	-79.50

	NODE	Vxx	Vyy
Max	Cent	2.1	1.7
	540	2.0	1.8
	541	2.0	1.8
	549	2.1	1.8
	548	2.1	1.8
Min	Cent	-2.1	0.4
	540	-1.9	0.7
	541	-1.9	-0.2
	549	-2.2	-0.2
	548	-2.2	0.7

LC		NODE	Fxx	Fyy	Fxy	Fmax	Fmin	ANGLE
RC ENV~2	Max	Cent	-0.3	1.4	0.1	1.4	-0.3	89.19
		540	-0.3	1.4	0.1	1.4	-0.3	89.19
		541	-0.3	1.4	0.1	1.4	-0.3	89.19
		549	-0.3	1.4	0.1	1.4	-0.3	89.20
		548	-0.3	1.4	0.1	1.4	-0.3	89.20
	Min	Cent	-2.4	0.6	-0.1	0.7	-2.4	-83.22
		540	-2.4	0.6	-0.1	0.6	-2.4	-83.06
		541	-2.4	0.7	-0.1	0.7	-2.4	-83.57
		549	-2.4	0.7	-0.1	0.7	-2.4	-83.36
		548	-2.4	0.6	-0.1	0.6	-2.4	-82.82

	NODE	Mxx	Myy	Mxy	Mmax	Mmin	ANGLE
Max	Cent	-6.4	0.1	-0.9	0.5	-6.6	-76.54
	540	-5.9	0.4	-0.7	0.7	-6.0	-77.77
	541	-6.1	0.3	-1.0	0.9	-6.2	-74.07
	549	-6.9	-0.0	-1.0	0.5	-7.0	-75.69
	548	-6.9	-0.3	-0.7	-0.0	-6.9	-78.83
Min	Cent	-8.3	-1.5	-2.8	-0.7	-9.2	-74.08
	540	-7.9	-1.1	-2.5	-0.4	-8.7	-75.47

541	-7.4	-1.2	-3.0	-0.2	-8.6	-72.01
549	-8.5	-1.7	-3.0	-0.7	-9.6	-73.10
548	-9.2	-2.0	-2.5	-1.3	-10.0	-75.98

	NODE	Vxx	Vyy
Max	Cent	0.6	1.0
	540	0.6	1.3
	541	0.6	0.8
	549	0.5	0.8
	548	0.5	1.3
Min	Cent	-1.2	0.5
	540	-1.1	0.8
	541	-1.1	0.0
	549	-1.3	0.0
	548	-1.3	0.8

ELEM	MAT	SEC	LC		NODE	Fxx	Fyy	Fxy	Fmax	Fmin	ANGLE
505	1	1	SX	(RS)	Cent	1.5	0.2	0.7	1.8	-0.2	23.89
					541	1.2	0.3	0.7	1.6	-0.1	28.37
					542	1.2	0.1	0.7	1.6	-0.3	26.27
					550	1.8	0.1	0.7	2.1	-0.2	20.38
					549	1.8	0.3	0.7	2.1	-0.0	21.81

	NODE	Mxx	Myy	Mxy	Mmax	Mmin	ANGLE
	Cent	2.5	0.7	0.5	2.6	0.6	15.42
	541	2.5	0.7	0.4	2.6	0.6	11.90
	542	2.7	0.4	0.5	2.8	0.3	12.18
	550	2.9	1.1	0.6	3.1	0.9	17.23
	549	2.2	1.0	0.5	2.4	0.8	19.41

	NODE	Vxx	Vyy
	Cent	2.5	1.5
	541	2.0	1.0
	542	2.0	1.9
	550	2.9	1.9
	549	2.9	1.0

LC		NODE	Fxx	Fyy	Fxy	Fmax	Fmin	ANGLE
SY	(RS)	Cent	0.2	0.3	1.6	1.8	-1.3	45.53
		541	0.3	0.3	1.6	1.9	-1.3	44.65
		542	0.3	0.3	1.6	1.9	-1.3	44.95
		550	0.2	0.3	1.6	1.8	-1.3	46.47
		549	0.2	0.3	1.6	1.8	-1.4	46.17

	NODE	Mxx	Myy	Mxy	Mmax	Mmin	ANGLE
	Cent	0.3	2.1	0.1	2.1	0.3	85.54
	541	0.6	1.5	0.1	1.5	0.6	84.86
	542	0.3	2.7	0.2	2.7	0.3	86.19
	550	0.4	2.6	0.2	2.7	0.3	84.19
	549	0.6	1.8	0.4	1.9	0.5	74.00

	NODE	Vxx	Vyy
	Cent	0.6	0.5
	541	1.1	0.6
	542	1.1	0.3
	550	0.1	0.3
	549	0.1	0.6

LC		NODE	Fxx	Fyy	Fxy	Fmax	Fmin	ANGLE
RC ENV~1	Max	Cent	0.5	2.0	1.6	2.0	-0.0	89.71
		541	0.2	2.0	1.6	2.0	-0.2	60.05
		542	0.2	2.0	1.6	2.1	-0.2	60.39
		550	0.8	2.0	1.6	2.0	0.2	61.34
		549	0.8	2.0	1.6	2.0	0.2	89.71
	Min	Cent	-3.1	0.5	-1.6	0.8	-3.1	-77.15
		541	-3.2	0.5	-1.6	0.8	-3.2	-75.73
		542	-3.2	0.5	-1.6	0.9	-3.2	-76.46
		550	-3.1	0.5	-1.6	0.9	-3.1	-78.33

		549	-3.1	0.5	-1.6	0.7	-3.1	-77.78

	NODE	Mxx	Myy	Mxy	Mmax	Mmin	ANGLE
Max	Cent	-3.3	1.9	-1.1	2.6	-3.6	-67.01
	541	-3.4	1.3	-1.0	2.0	-3.7	-69.02
	542	-1.9	2.5	-1.3	3.2	-2.6	-60.41
	550	-2.5	2.8	-1.2	4.1	-2.8	-66.19
	549	-5.0	1.0	-0.9	1.2	-5.1	-72.13
Min	Cent	-9.1	-2.4	-5.8	-1.7	-12.1	-68.30
	541	-9.6	-1.8	-5.3	-1.2	-12.1	-74.43
	542	-7.3	-2.8	-6.2	-1.6	-10.9	-58.76
	550	-8.5	-2.5	-6.2	-1.5	-11.6	-64.14
	549	-12.1	-2.6	-5.3	-2.0	-14.3	-73.08

	NODE	Vxx	Vyy
Max	Cent	-0.2	1.4
	541	-0.3	1.8
	542	-0.3	1.1
	550	-0.0	1.1
	549	-0.0	1.8
Min	Cent	-7.2	-2.0
	541	-6.4	-0.2
	542	-6.4	-3.9
	550	-7.9	-3.9
	549	-7.9	-0.2

LC		NODE	Fxx	Fyy	Fxy	Fmax	Fmin	ANGLE
RC ENV~2	Max	Cent	-0.5	1.5	0.1	1.5	-0.5	89.78
		541	-0.4	1.5	0.1	1.5	-0.4	89.79
		542	-0.4	1.5	0.1	1.5	-0.4	89.79
		550	-0.5	1.5	0.1	1.5	-0.5	89.78
		549	-0.5	1.5	0.1	1.5	-0.5	89.78
	Min	Cent	-2.2	0.7	-0.1	0.7	-2.2	-83.47
		541	-2.3	0.6	-0.1	0.7	-2.3	-83.07
		542	-2.3	0.7	-0.1	0.7	-2.3	-83.56
		550	-2.2	0.7	-0.1	0.7	-2.2	-83.82
		549	-2.2	0.6	-0.1	0.7	-2.2	-83.38

	NODE	Mxx	Myy	Mxy	Mmax	Mmin	ANGLE
Max	Cent	-5.7	0.5	-1.6	1.7	-6.2	-68.25
	541	-5.9	0.3	-1.4	1.3	-6.2	-70.32
	542	-4.2	0.3	-1.8	2.2	-5.2	-61.79
	550	-5.2	1.4	-1.8	2.8	-5.7	-67.33
	549	-7.1	-0.1	-1.4	0.7	-7.4	-73.21
Min	Cent	-6.8	-1.2	-3.9	0.2	-8.7	-74.66
	541	-7.1	-1.2	-3.6	0.1	-8.8	-68.98
	542	-5.4	-1.4	-4.2	0.5	-7.8	-70.03
	550	-6.3	-0.7	-4.2	0.7	-8.4	-73.25
	549	-8.9	-1.7	-3.6	-0.6	-10.3	-71.04

	NODE	Vxx	Vyy
Max	Cent	-2.5	0.0
	541	-2.2	0.8
	542	-2.2	-0.8
	550	-2.8	-0.8
	549	-2.8	0.8
Min	Cent	-5.1	-1.3
	541	-4.6	0.0
	542	-4.6	-2.7
	550	-5.6	-2.7
	549	-5.6	0.0

ELEM	MAT	SEC	LC		NODE	Fxx	Fyy	Fxy	Fmax	Fmin	ANGLE
506	1	1	SX (RS)		Cent	1.4	0.5	1.4	2.4	-0.5	36.19
					542	0.6	0.1	1.4	1.7	-1.0	40.52
					543	0.6	1.1	1.4	2.2	-0.6	50.04
					551	2.4	1.1	1.4	3.2	0.2	32.06
					550	2.4	0.1	1.4	3.0	-0.5	25.31

	NODE	Mxx	Myy	Mxy	Mmax	Mmin	ANGLE

Cent	3.4	0.8	0.3	3.4	0.7	7.12
542	3.0	0.4	0.5	3.1	0.3	11.36
543	2.2	1.3	0.1	2.2	1.3	6.42
551	5.6	3.0	0.2	5.6	3.0	3.32
550	3.0	1.1	0.5	3.1	1.0	13.96

	NODE	Vxx	Vyy
	Cent	2.2	4.4
	542	1.3	1.9
	543	1.3	6.8
	551	4.5	6.8
	550	4.5	1.9

LC		NODE	Fxx	Fyy	Fxy	Fmax	Fmin	ANGLE
SY (RS)		Cent	0.5	1.1	2.2	3.0	-1.4	49.10
		542	0.2	0.3	2.2	2.4	-2.0	46.05
		543	0.2	2.3	2.2	3.7	-1.2	58.21
		551	1.1	2.3	2.2	4.0	-0.5	52.70
		550	1.1	0.3	2.2	2.9	-1.5	39.76

	NODE	Mxx	Myy	Mxy	Mmax	Mmin	ANGLE
	Cent	0.6	3.6	0.3	3.7	0.6	84.47
	542	0.2	2.6	0.6	2.7	0.1	77.11
	543	1.2	3.3	0.5	3.4	1.0	76.71
	551	2.9	6.3	0.1	6.3	2.9	87.53
	550	1.3	2.5	0.1	2.5	1.2	83.99

	NODE	Vxx	Vyy
	Cent	4.1	2.6
	542	2.2	0.3
	543	2.2	5.0
	551	6.0	5.0
	550	6.0	0.3

LC		NODE	Fxx	Fyy	Fxy	Fmax	Fmin	ANGLE
RC ENV~1	Max	Cent	0.4	2.1	2.1	3.2	-0.5	59.87
		542	-0.4	2.1	2.1	2.5	-0.6	57.52
		543	-0.4	3.1	2.1	4.1	-0.6	66.44
		551	1.4	3.1	2.1	4.3	0.3	62.50
		550	1.4	2.1	2.1	2.9	-0.2	51.72
	Min	Cent	-2.9	-0.3	-2.2	0.8	-3.2	-77.15
		542	-3.1	0.5	-2.2	1.0	-3.1	-76.26
		543	-3.1	-1.5	-2.2	0.7	-3.6	-57.57
		551	-3.4	-1.5	-2.2	0.3	-4.1	-68.98
		550	-3.4	0.5	-2.2	0.9	-3.8	-79.49

	NODE	Mxx	Myy	Mxy	Mmax	Mmin	ANGLE
Max	Cent	0.1	3.7	-2.2	6.3	-1.8	-53.19
	542	-1.1	2.5	-1.7	4.5	-2.2	-56.55
	543	0.3	2.0	-2.0	5.9	-2.0	-40.38
	551	4.3	7.8	-2.6	11.2	1.8	-49.82
	550	-2.8	2.5	-1.9	4.9	-3.6	-63.80
Min	Cent	-6.7	-3.6	-7.7	-0.9	-10.6	-47.15
	542	-7.1	-2.6	-7.0	-0.6	-10.8	-53.56
	543	-4.3	-4.5	-7.8	-0.8	-10.5	-39.26
	551	-7.0	-4.7	-8.2	-1.5	-8.3	-42.67
	550	-9.1	-2.4	-7.5	-1.3	-13.1	-66.24

	NODE	Vxx	Vyy
Max	Cent	-1.6	1.4
	542	-1.8	1.1
	543	-1.8	1.7
	551	-1.4	1.7
	550	-1.4	1.1
Min	Cent	-13.5	-9.1
	542	-9.2	-3.9
	543	-9.2	-14.2
	551	-17.8	-14.2
	550	-17.8	-3.9

LC		NODE	Fxx	Fyy	Fxy	Fmax	Fmin	ANGLE
RC ENV~2	Max	Cent	-0.6	1.5	0.1	1.5	-0.7	89.58
		542	-0.5	1.5	0.1	1.5	-0.5	89.59
		543	-0.5	1.5	0.1	1.5	-0.5	89.59
		551	-0.8	1.5	0.1	1.5	-0.8	89.57
		550	-0.8	1.5	0.1	1.5	-0.8	89.57
	Min	Cent	-2.1	0.6	-0.3	0.7	-2.1	-79.31
		542	-2.2	0.7	-0.3	0.7	-2.2	-78.72
		543	-2.2	0.5	-0.3	0.6	-2.2	-76.94
		551	-2.0	0.5	-0.3	0.6	-2.0	-79.85
		550	-2.0	0.7	-0.3	0.7	-2.0	-80.98

	NODE	Mxx	Myy	Mxy	Mmax	Mmin	ANGLE
Max	Cent	-1.9	0.9	-2.6	4.3	-4.5	-54.22
	542	-3.3	0.5	-2.2	3.1	-5.0	-57.79
	543	-0.1	-1.1	-2.5	4.0	-4.2	-41.17
	551	1.7	3.8	-2.7	7.7	-2.3	-50.82
	550	-5.7	1.2	-2.4	3.3	-6.6	-64.75
Min	Cent	-3.8	-0.9	-5.4	1.4	-7.5	-61.63
	542	-4.6	-1.2	-4.8	0.9	-7.7	-65.85
	543	-2.2	-2.9	-5.4	0.9	-7.4	-49.42
	551	-1.9	0.9	-5.7	3.2	-5.8	-59.15
	550	-6.8	-0.7	-5.2	0.9	-9.4	-70.12

	NODE	Vxx	Vyy
Max	Cent	-5.6	-2.9
	542	-4.0	-0.8
	543	-4.0	-4.9
	551	-7.3	-4.9
	550	-7.3	-0.8
Min	Cent	-9.7	-6.4
	542	-6.6	-2.7
	543	-6.6	-10.0
	551	-12.8	-10.0
	550	-12.8	-2.7

ELEM	MAT	SEC	LC		NODE	Fxx	Fyy	Fxy	Fmax	Fmin	ANGLE
507	1	1	SX (RS)		Cent	0.3	0.3	1.0	1.3	-0.7	45.72
					543	0.5	0.7	1.0	1.6	-0.4	48.35
					544	0.5	0.1	1.0	1.3	-0.7	38.50
					552	1.0	0.1	1.0	1.6	-0.5	32.07
					551	1.0	0.7	1.0	1.8	-0.1	41.11

	NODE	Mxx	Myy	Mxy	Mmax	Mmin	ANGLE
	Cent	0.4	0.2	1.0	1.2	-0.7	41.40
	543	1.9	1.3	1.4	3.1	0.1	39.44
	544	2.0	0.4	0.2	2.0	0.4	5.79
	552	9.1	1.8	0.2	9.1	1.8	1.74
	551	6.3	3.1	1.4	6.9	2.6	20.62

	NODE	Vxx	Vyy
	Cent	13.0	3.4
	543	1.1	6.8
	544	1.1	0.0
	552	25.8	0.0
	551	25.8	6.8

LC		NODE	Fxx	Fyy	Fxy	Fmax	Fmin	ANGLE
SY (RS)		Cent	0.9	3.3	1.4	3.9	0.3	65.44
		543	0.3	2.1	1.4	2.8	-0.4	61.31
		544	0.3	4.5	1.4	4.9	-0.1	73.35
		552	1.5	4.5	1.4	5.0	1.0	68.75
		551	1.5	2.1	1.4	3.2	0.4	50.90

	NODE	Mxx	Myy	Mxy	Mmax	Mmin	ANGLE
	Cent	2.3	4.9	0.7	5.1	2.1	74.91
	543	1.7	3.4	0.6	3.6	1.5	71.81
	544	2.0	2.0	0.6	2.6	1.4	43.65

		552	6.3	8.7	0.5	8.8	6.2	77.65
		551	0.7	5.5	0.6	5.6	0.6	83.38

	NODE	Vxx	Vyy
	Cent	6.3	8.1
	543	1.1	5.0
	544	1.1	11.3
	552	11.4	11.3
	551	11.4	5.0

LC		NODE	Fxx	Fyy	Fxy	Fmax	Fmin	ANGLE
RC ENV~1	Max	Cent	-0.1	4.1	1.3	4.5	-0.4	73.50
		543	-0.5	2.9	1.3	3.3	-0.8	71.50
		544	-0.5	5.2	1.3	5.5	-0.8	77.85
		552	0.6	5.2	1.3	5.6	0.2	75.14
		551	0.6	2.9	1.3	3.5	-0.0	65.42
	Min	Cent	-2.9	-2.4	-1.4	-0.7	-3.6	-38.92
		543	-2.9	-1.2	-1.4	0.1	-2.9	-45.66
		544	-2.9	-3.7	-1.4	-0.7	-4.3	-24.75
		552	-2.9	-3.7	-1.4	-1.5	-4.6	-32.78
		551	-2.9	-1.2	-1.4	-0.3	-3.3	-56.47

		NODE	Mxx	Myy	Mxy	Mmax	Mmin	ANGLE
	Max	Cent	5.7	4.8	-1.3	10.0	1.7	-34.28
		543	1.6	2.3	-0.9	6.6	-0.6	-37.63
		544	4.2	-0.4	-1.0	6.0	-0.9	-21.99
		552	13.5	10.1	-1.6	16.4	8.0	-26.85
		551	6.0	7.3	-1.4	12.4	4.0	-46.22
	Min	Cent	-2.2	-5.0	-7.4	-0.3	-7.3	-32.62
		543	-3.4	-4.5	-7.5	-0.9	-9.6	-38.92
		544	-2.5	-6.3	-5.9	-1.0	-9.6	-33.43
		552	-6.3	-7.3	-7.0	-2.1	-8.7	-27.21
		551	-6.7	-3.8	-8.6	0.9	-9.0	-61.17

		NODE	Vxx	Vyy
	Max	Cent	8.9	2.5
		543	-1.3	1.7
		544	-1.3	5.2
		552	20.0	5.2
		551	20.0	1.7
	Min	Cent	-17.1	-14.8
		543	-5.7	-14.2
		544	-5.7	-17.3
		552	-31.6	-17.3
		551	-31.6	-14.2

LC		NODE	Fxx	Fyy	Fxy	Fmax	Fmin	ANGLE
RC ENV~2	Max	Cent	-0.5	1.4	0.1	1.4	-0.5	89.76
		543	-0.6	1.5	0.1	1.5	-0.6	89.76
		544	-0.6	1.3	0.1	1.3	-0.6	89.75
		552	-0.3	1.3	0.1	1.3	-0.3	89.75
		551	-0.3	1.5	0.1	1.5	-0.3	89.76
	Min	Cent	-2.1	0.6	-0.2	0.6	-2.1	-82.40
		543	-2.0	0.5	-0.2	0.6	-2.0	-82.97
		544	-2.0	0.6	-0.2	0.7	-2.0	-85.54
		552	-2.1	0.6	-0.2	0.7	-2.1	-84.68
		551	-2.1	0.5	-0.2	0.6	-2.1	-80.59

		NODE	Mxx	Myy	Mxy	Mmax	Mmin	ANGLE
	Max	Cent	3.8	0.6	-2.2	6.8	-1.9	-34.86
		543	0.9	-1.0	-2.2	4.4	-3.5	-38.37
		544	2.7	-2.4	-1.6	4.0	-3.2	-22.14
		552	9.3	3.6	-2.1	11.3	1.5	-27.16
		551	3.3	4.1	-2.7	8.6	-1.2	-47.14
	Min	Cent	0.1	-1.3	-5.1	2.2	-5.0	-43.85
		543	-1.6	-2.7	-5.2	0.9	-6.7	-47.24
		544	-0.5	-4.4	-4.0	0.4	-6.6	-29.61
		552	1.7	0.5	-4.8	4.0	-2.9	-37.43
		551	-0.8	1.1	-6.0	3.7	-5.2	-55.54

	NODE	Vxx	Vyy

Max	Cent	-2.7	-5.5
	543	-2.4	-4.9
	544	-2.4	-6.0
	552	-2.5	-6.0
	551	-2.5	-4.9
Min	Cent	-8.1	-10.5
	543	-4.0	-10.0
	544	-4.0	-11.3
	552	-12.6	-11.3
	551	-12.6	-10.0

ELEM	MAT	SEC	LC		NODE	Fxx	Fyy	Fxy	Fmax	Fmin	ANGLE
508	1	1	SX (RS)		Cent	6.0	1.1	3.2	7.5	-0.5	26.10
					173	0.5	1.4	3.2	4.1	-2.2	48.75
					545	0.5	1.2	3.2	4.0	-2.3	48.04
					553	11.9	1.2	3.2	12.7	0.3	15.28
					11	11.9	1.4	3.2	12.8	0.5	15.47

	NODE	Mxx	Myy	Mxy	Mmax	Mmin	ANGLE
	Cent	12.3	3.1	2.4	12.9	2.6	13.73
	173	4.2	1.1	7.8	10.6	-5.4	39.42
	545	7.1	0.7	1.4	7.4	0.4	11.48
	553	7.8	4.9	1.8	8.7	4.0	26.12
	11	38.6	7.7	7.4	40.3	6.1	12.77

	NODE	Vxx	Vyy
	Cent	17.3	4.1
	173	19.6	0.2
	545	19.6	8.2
	553	54.3	8.2
	11	54.3	0.2

LC		NODE	Fxx	Fyy	Fxy	Fmax	Fmin	ANGLE
SY (RS)		Cent	1.8	4.9	4.6	8.3	-1.5	54.31
		173	0.6	11.4	4.6	13.1	-1.1	69.72
		545	0.6	1.5	4.6	5.7	-3.6	47.73
		553	3.7	1.5	4.6	7.3	-2.2	38.35
		11	3.7	11.4	4.6	13.5	1.5	64.96

	NODE	Mxx	Myy	Mxy	Mmax	Mmin	ANGLE
	Cent	2.9	7.7	2.1	8.4	2.1	69.49
	173	3.6	5.4	2.5	7.1	1.9	54.91
	545	1.1	3.5	0.6	3.6	1.0	77.03
	553	1.6	3.4	5.1	7.6	-2.6	50.02
	11	9.6	25.3	5.3	26.9	8.0	73.06

	NODE	Vxx	Vyy
	Cent	5.0	12.4
	173	7.4	37.6
	545	7.4	13.0
	553	12.0	13.0
	11	12.0	37.6

LC		NODE	Fxx	Fyy	Fxy	Fmax	Fmin	ANGLE
RC ENV~1	Max	Cent	3.2	5.5	5.8	9.0	-0.1	59.43
		173	0.3	11.7	5.8	14.2	-0.5	67.13
		545	0.3	2.5	5.8	7.3	-0.5	49.90
		553	6.7	2.5	5.8	9.3	0.2	31.03
		11	6.7	11.7	5.8	13.9	0.4	69.30
	Min	Cent	-11.4	-4.4	-3.4	-1.1	-13.5	-45.90
		173	-0.9	-11.1	-3.4	0.1	-12.1	-16.83
		545	-0.9	-0.6	-3.4	0.6	-4.9	-67.58
		553	-22.2	-0.6	-3.4	-0.1	-23.4	-83.48
		11	-22.2	-11.1	-3.4	-6.4	-23.5	-36.01

		NODE	Mxx	Myy	Mxy	Mmax	Mmin	ANGLE
	Max	Cent	25.2	12.2	3.0	25.3	11.5	-3.93

		173	8.9	4.7	5.8	11.8	4.7	26.89
		545	12.0	5.8	4.4	14.0	3.1	26.40
		553	8.9	10.7	7.1	12.9	4.8	62.49
		11	80.6	38.1	5.2	82.4	35.8	-10.86
	Min	Cent	-2.2	-3.2	-1.8	2.1	-3.4	-67.17
		173	0.6	-6.0	-9.9	3.3	-10.5	-25.91
		545	-2.4	-1.2	0.4	1.6	-2.6	61.86
		553	-6.6	-1.5	-3.0	-1.5	-6.7	87.62
		11	-8.4	-12.4	-9.9	10.1	-14.0	-62.68

		NODE	Vxx	Vyy
	Max	Cent	58.0	2.5
		173	20.8	21.5
		545	20.8	9.4
		553	128.0	9.4
		11	128.0	21.5
	Min	Cent	7.6	-25.3
		173	-18.4	-53.7
		545	-18.4	-16.6
		553	-5.6	-16.6
		11	-5.6	-53.7

LC		NODE	Fxx	Fyy	Fxy	Fmax	Fmin	ANGLE
RC ENV~2	Max	Cent	1.4	0.8	3.9	2.3	-0.0	69.11
		173	-0.2	0.6	3.9	3.6	-0.3	46.06
		545	-0.2	1.8	3.9	4.7	-0.3	52.76
		553	3.0	1.8	3.9	3.3	0.2	-16.96
		11	3.0	0.6	3.9	3.3	0.3	-19.46
	Min	Cent	-7.9	0.4	-1.0	0.5	-9.4	-82.69
		173	-0.5	-0.1	-1.0	0.5	-4.2	-83.20
		545	-0.5	0.2	-1.0	0.4	-3.4	-82.19
		553	-15.5	0.2	-1.0	0.4	-16.3	-82.09
		11	-15.5	-0.1	-1.0	0.5	-16.4	80.96

		NODE	Mxx	Myy	Mxy	Mmax	Mmin	ANGLE
	Max	Cent	18.2	8.3	0.8	18.2	8.3	-2.85
		173	5.7	-0.6	0.5	7.9	-0.7	-36.01
		545	8.7	3.8	3.3	10.2	2.1	27.01
		553	4.0	7.6	3.1	9.3	2.3	61.99
		11	57.8	23.4	0.4	59.0	22.2	-10.54
	Min	Cent	3.9	1.9	-0.9	4.2	1.7	19.34
		173	2.9	-1.6	-6.8	5.3	-6.5	-10.47
		545	1.0	1.2	0.6	1.9	0.3	49.30
		553	-2.3	0.4	0.5	0.5	-2.4	78.40
		11	11.4	6.9	-6.9	11.4	6.8	4.50

		NODE	Vxx	Vyy
	Max	Cent	42.0	-6.0
		173	9.2	-12.3
		545	9.2	0.3
		553	91.8	0.3
		11	91.8	-12.3
	Min	Cent	15.7	-18.2
		173	-8.6	-27.0
		545	-8.6	-9.3
		553	22.2	-9.3
		11	22.2	-27.0

ELEM	MAT	SEC	LC		NODE	Fxx	Fyy	Fxy	Fmax	Fmin	ANGLE
509	1	1	SX (RS)		Cent	3.4	1.1	0.7	3.6	0.9	16.21
					545	2.9	1.6	0.7	3.2	1.3	24.16
					546	2.9	0.7	0.7	3.1	0.5	16.58
					554	4.0	0.7	0.7	4.1	0.5	12.05
					553	4.0	1.6	0.7	4.2	1.4	16.03

		NODE	Mxx	Myy	Mxy	Mmax	Mmin	ANGLE
		Cent	5.8	2.4	0.7	5.9	2.3	10.78
		545	6.5	0.6	0.6	6.6	0.6	5.93
		546	5.0	2.2	0.5	5.0	2.1	9.70
		554	3.9	2.2	0.6	4.1	2.0	16.69
		553	7.8	5.0	0.7	8.0	4.8	13.09

	NODE	Vxx	Vyy
	Cent	4.7	4.3
	545	3.4	8.2
	546	3.4	0.3
	554	6.0	0.3
	553	6.0	8.2

LC		NODE	Fxx	Fyy	Fxy	Fmax	Fmin	ANGLE
SY (RS)		Cent	1.1	0.6	2.1	3.0	-1.3	41.53
		545	1.2	1.5	2.1	3.5	-0.8	47.06
		546	1.2	0.3	2.1	2.9	-1.4	38.98
		554	1.3	0.3	2.1	2.9	-1.4	38.43
		553	1.3	1.5	2.1	3.5	-0.8	46.48

	NODE	Mxx	Myy	Mxy	Mmax	Mmin	ANGLE
	Cent	0.8	1.1	0.7	1.7	0.2	51.79
	545	1.8	3.9	0.9	4.2	1.4	69.77
	546	0.9	1.6	0.9	2.2	0.3	55.83
	554	0.5	2.4	0.4	2.4	0.5	78.61
	553	1.4	3.4	0.4	3.4	1.4	79.11

	NODE	Vxx	Vyy
	Cent	1.9	5.9
	545	3.1	13.0
	546	3.1	1.1
	554	1.3	1.1
	553	1.3	13.0

LC		NODE	Fxx	Fyy	Fxy	Fmax	Fmin	ANGLE
RC ENV~1	Max	Cent	1.7	2.7	2.3	3.0	0.9	57.40
		545	1.4	3.4	2.3	3.8	0.9	60.95
		546	1.4	2.0	2.3	2.8	0.5	53.43
		554	2.0	2.0	2.3	2.7	0.8	36.98
		553	2.0	3.4	2.3	3.7	1.3	62.42
	Min	Cent	-6.9	-0.2	-1.9	-0.2	-7.0	-83.97
		545	-5.9	-0.6	-1.9	-0.5	-6.0	-82.36
		546	-5.9	0.1	-1.9	0.2	-6.1	-83.43
		554	-7.8	0.1	-1.9	0.1	-7.9	-84.99
		553	-7.8	-0.6	-1.9	-0.5	-7.9	-84.38

	NODE	Mxx	Myy	Mxy	Mmax	Mmin	ANGLE
Max	Cent	6.2	5.7	1.5	6.9	3.5	27.73
	545	10.3	6.0	2.1	10.7	4.2	12.59
	546	2.8	4.0	1.6	4.3	1.8	51.32
	554	0.2	2.4	0.8	2.4	-0.1	-88.86
	553	11.4	11.7	1.4	12.0	10.1	69.10
Min	Cent	-5.4	-0.7	-1.1	-0.7	-5.4	88.79
	545	-2.7	-1.7	-0.6	1.1	-2.8	-87.42
	546	-7.1	-1.1	-1.2	-1.1	-7.1	87.59
	554	-8.2	-2.6	-1.7	-2.5	-8.5	-85.82
	553	-4.3	-1.0	-1.1	-1.0	-4.3	-89.49

	NODE	Vxx	Vyy
Max	Cent	22.5	5.1
	545	20.7	9.4
	546	20.7	2.9
	554	24.2	2.9
	553	24.2	9.4
Min	Cent	6.2	-6.8
	545	6.9	-16.6
	546	6.9	0.7
	554	5.4	0.7
	553	5.4	-16.6

LC		NODE	Fxx	Fyy	Fxy	Fmax	Fmin	ANGLE
RC ENV~2	Max	Cent	0.6	1.9	0.8	2.0	0.1	84.00
		545	0.5	2.4	0.8	2.5	-0.1	83.37

		546	0.5	1.4	0.8	1.5	0.2	82.88
		554	0.8	1.4	0.8	1.5	0.3	84.12
		553	0.8	2.4	0.8	2.5	-0.1	84.45
	Min	Cent	-4.8	0.2	-0.3	0.5	-4.9	-84.80
		545	-4.1	0.0	-0.3	0.4	-4.2	-84.27
		546	-4.1	0.4	-0.3	0.6	-4.3	-85.28
		554	-5.5	0.4	-0.3	0.6	-5.5	-85.24
		553	-5.5	0.0	-0.3	0.4	-5.5	-84.21

	NODE	Mxx	Myy	Mxy	Mmax	Mmin	ANGLE
Max	Cent	2.6	4.1	0.9	4.4	2.3	70.32
	545	7.2	3.5	1.4	7.5	3.0	14.54
	546	-0.9	2.8	0.9	2.9	-1.0	81.45
	554	-3.2	1.6	0.4	1.6	-3.2	-90.00
	553	7.5	8.4	0.8	8.7	7.1	65.98
Min	Cent	-2.5	-0.1	-0.6	-0.1	-2.6	-86.02
	545	0.4	1.1	-0.2	1.1	0.4	75.90
	546	-4.5	-0.4	-0.6	-0.4	-4.6	-87.57
	554	-5.9	-1.7	-1.0	-1.7	-6.0	-82.01
	553	-0.4	0.8	-0.6	0.8	-0.4	-80.42

	NODE	Vxx	Vyy
Max	Cent	16.4	1.2
	545	15.1	0.3
	546	15.1	2.1
	554	17.7	2.1
	553	17.7	0.3
Min	Cent	8.4	-4.0
	545	8.3	-9.3
	546	8.3	1.3
	554	8.5	1.3
	553	8.5	-9.3

ELEM	MAT	SEC	LC		NODE	Fxx	Fyy	Fxy	Fmax	Fmin	ANGLE
510	1	1	SX	(RS)	Cent	2.4	0.6	0.4	2.4	0.6	11.77
					546	2.2	0.9	0.4	2.3	0.8	14.32
					547	2.2	0.4	0.4	2.3	0.4	11.41
					555	2.5	0.4	0.4	2.6	0.4	9.97
					554	2.5	0.9	0.4	2.6	0.8	12.18

	NODE	Mxx	Myy	Mxy	Mmax	Mmin	ANGLE
	Cent	4.0	1.8	0.4	4.1	1.8	9.28
	546	4.9	2.2	0.5	4.9	2.1	9.64
	547	3.4	1.3	0.3	3.5	1.3	9.15
	555	3.2	1.5	0.3	3.3	1.4	10.52
	554	4.6	2.3	0.4	4.7	2.2	9.84

	NODE	Vxx	Vyy
	Cent	2.4	0.3
	546	2.4	0.3
	547	2.4	0.4
	555	2.3	0.4
	554	2.3	0.3

LC		NODE	Fxx	Fyy	Fxy	Fmax	Fmin	ANGLE
SY	(RS)	Cent	0.7	0.1	1.8	2.3	-1.4	40.41
		546	0.7	0.3	1.8	2.3	-1.4	41.62
		547	0.7	0.3	1.8	2.4	-1.4	41.97
		555	0.8	0.3	1.8	2.4	-1.3	41.13
		554	0.8	0.3	1.8	2.4	-1.3	40.78

	NODE	Mxx	Myy	Mxy	Mmax	Mmin	ANGLE
	Cent	0.4	1.6	0.6	1.9	0.2	67.50
	546	0.6	1.7	0.5	1.9	0.4	67.55
	547	0.4	1.3	0.4	1.5	0.2	69.09
	555	0.3	1.2	0.7	1.6	-0.1	61.28
	554	0.7	2.4	0.8	2.7	0.3	67.76

	NODE	Vxx	Vyy

		Cent	0.4	0.3
		546	0.4	1.1
		547	0.4	0.4
		555	0.4	0.4
		554	0.4	1.1

LC		NODE	Fxx	Fyy	Fxy	Fmax	Fmin	ANGLE
RC ENV~1	Max	Cent	1.0	2.2	1.8	2.2	0.8	56.50
		546	0.9	2.3	1.8	2.3	0.8	88.33
		547	0.9	2.0	1.8	2.3	0.7	57.34
		555	1.1	2.0	1.8	2.3	0.8	57.22
		554	1.1	2.3	1.8	2.3	0.9	88.42
	Min	Cent	-4.9	0.2	-1.8	0.2	-4.9	-84.60
		546	-4.7	0.0	-1.8	0.0	-4.7	-84.06
		547	-4.7	0.4	-1.8	0.4	-4.7	-84.58
		555	-5.1	0.4	-1.8	0.4	-5.1	-85.05
		554	-5.1	0.0	-1.8	0.0	-5.1	-84.61

		NODE	Mxx	Myy	Mxy	Mmax	Mmin	ANGLE
	Max	Cent	-0.1	1.9	0.7	2.0	-0.2	-85.61
		546	2.9	4.0	0.9	4.0	2.3	89.95
		547	-2.1	1.2	0.6	1.3	-2.1	81.96
		555	-3.1	-0.0	0.5	-0.0	-3.1	86.69
		554	2.0	2.9	0.9	3.0	1.6	-83.81
	Min	Cent	-8.9	-2.2	-2.1	-2.0	-9.3	-79.25
		546	-6.8	-1.0	-1.8	-1.0	-6.8	-89.07
		547	-10.6	-1.8	-2.2	-1.5	-11.0	-80.66
		555	-12.1	-3.8	-2.5	-3.5	-12.6	-78.87
		554	-7.3	-2.5	-2.0	-2.3	-7.8	-76.91

		NODE	Vxx	Vyy
	Max	Cent	11.5	3.1
		546	11.3	2.9
		547	11.3	3.4
		555	11.6	3.4
		554	11.6	2.9
	Min	Cent	3.6	1.7
		546	3.5	0.7
		547	3.5	1.9
		555	3.7	1.9
		554	3.7	0.7

LC		NODE	Fxx	Fyy	Fxy	Fmax	Fmin	ANGLE
RC ENV~2	Max	Cent	0.2	1.6	0.2	1.6	0.1	88.43
		546	0.2	1.7	0.2	1.7	0.1	88.42
		547	0.2	1.5	0.2	1.5	0.1	88.35
		555	0.3	1.5	0.2	1.5	0.2	88.44
		554	0.3	1.7	0.2	1.7	0.2	88.51
	Min	Cent	-3.4	0.4	-0.1	0.5	-3.4	-63.45
		546	-3.3	0.4	-0.1	0.4	-3.3	-61.85
		547	-3.3	0.5	-0.1	0.6	-3.3	-70.54
		555	-3.6	0.5	-0.1	0.6	-3.6	-64.93
		554	-3.6	0.4	-0.1	0.5	-3.6	-52.38

		NODE	Mxx	Myy	Mxy	Mmax	Mmin	ANGLE
	Max	Cent	-3.6	1.3	0.2	1.3	-3.6	-86.92
		546	-0.7	2.9	0.5	2.9	-0.7	88.23
		547	-5.3	0.8	0.2	0.9	-5.3	-87.76
		555	-6.2	-0.5	-0.1	-0.4	-6.2	-83.96
		554	-1.7	2.0	0.2	2.0	-1.8	-85.39
	Min	Cent	-6.4	-1.5	-1.3	-1.3	-6.6	-81.31
		546	-4.4	-0.4	-1.1	-0.3	-4.4	-82.12
		547	-7.7	-1.2	-1.4	-1.0	-7.9	-82.52
		555	-8.8	-2.7	-1.6	-2.5	-9.1	-80.55
		554	-5.1	-1.6	-1.2	-1.5	-5.4	-79.22

		NODE	Vxx	Vyy
	Max	Cent	8.4	2.3
		546	8.3	2.1
		547	8.3	2.5
		555	8.5	2.5

			554	8.5	2.1		
		Min	Cent	4.9	1.7		
			546	4.8	1.3		
			547	4.8	2.1		
			555	5.0	2.1		
			554	5.0	1.3		

ELEM	MAT	SEC	LC		NODE	Fxx	Fyy	Fxy	Fmax	Fmin	ANGLE
511	1	1	SX (RS)		Cent	1.9	0.4	0.4	2.0	0.3	13.59
					547	1.8	0.6	0.4	1.9	0.5	15.51
					548	1.8	0.3	0.4	1.9	0.2	12.92
					556	1.9	0.3	0.4	2.0	0.2	12.13
					555	1.9	0.6	0.4	2.0	0.5	14.41

	NODE	Mxx	Myy	Mxy	Mmax	Mmin	ANGLE
	Cent	3.0	1.2	0.2	3.0	1.2	5.81
	547	3.5	1.4	0.2	3.6	1.3	5.10
	548	2.6	1.1	0.1	2.6	1.1	4.05
	556	2.4	1.1	0.2	2.5	1.1	8.06
	555	3.5	1.5	0.3	3.5	1.5	7.65

	NODE	Vxx	Vyy
	Cent	2.1	0.2
	547	2.0	0.4
	548	2.0	0.1
	556	2.1	0.1
	555	2.1	0.4

LC		NODE	Fxx	Fyy	Fxy	Fmax	Fmin	ANGLE
SY (RS)		Cent	0.5	0.3	1.6	2.1	-1.2	43.34
		547	0.5	0.3	1.6	2.0	-1.3	44.00
		548	0.5	0.3	1.6	2.0	-1.3	43.64
		556	0.6	0.3	1.6	2.1	-1.2	42.47
		555	0.6	0.3	1.6	2.1	-1.2	42.83

	NODE	Mxx	Myy	Mxy	Mmax	Mmin	ANGLE
	Cent	0.3	1.3	0.5	1.5	0.1	69.50
	547	0.4	1.4	0.4	1.5	0.2	69.17
	548	0.2	1.3	0.4	1.5	0.1	71.19
	556	0.3	1.5	0.5	1.7	0.1	70.82
	555	0.4	1.2	0.5	1.4	0.2	64.28

	NODE	Vxx	Vyy
	Cent	0.3	0.1
	547	0.3	0.4
	548	0.3	0.3
	556	0.3	0.3
	555	0.3	0.4

LC		NODE	Fxx	Fyy	Fxy	Fmax	Fmin	ANGLE
RC ENV~1	Max	Cent	0.7	2.1	1.6	2.1	0.6	59.47
		547	0.7	2.2	1.6	2.2	0.5	-89.75
		548	0.7	2.0	1.6	2.0	0.5	59.59
		556	0.8	2.0	1.6	2.1	0.6	58.66
		555	0.8	2.2	1.6	2.2	0.6	-89.75
	Min	Cent	-3.9	0.4	-1.7	0.5	-3.9	-83.00
		547	-3.9	0.3	-1.7	0.3	-3.9	-82.59
		548	-3.9	0.5	-1.7	0.6	-3.9	-83.13
		556	-3.9	0.5	-1.7	0.6	-3.9	-83.35
		555	-3.9	0.3	-1.7	0.3	-3.9	-82.84

		NODE	Mxx	Myy	Mxy	Mmax	Mmin	ANGLE
	Max	Cent	-3.4	0.3	0.1	0.3	-3.5	88.80
		547	-1.7	1.3	0.2	1.5	-1.7	-82.11
		548	-4.3	0.8	0.0	0.8	-4.3	89.75
		556	-5.2	-0.5	0.0	-0.5	-5.2	89.65
		555	-2.5	0.1	0.2	0.1	-2.5	89.87
	Min	Cent	-12.1	-2.9	-2.9	-2.4	-12.8	-77.40

547	-10.4	-1.8	-2.7	-1.4	-11.1	-87.00
548	-12.3	-2.1	-3.2	-1.7	-13.1	-81.59
556	-13.7	-4.1	-3.2	-3.4	-14.5	-76.82
555	-11.8	-3.7	-2.8	-3.3	-12.5	-77.08

	NODE	Vxx	Vyy
Max	Cent	5.4	3.3
	547	5.3	3.4
	548	5.3	3.3
	556	5.5	3.3
	555	5.5	3.4
Min	Cent	0.7	2.3
	547	0.7	1.9
	548	0.7	2.3
	556	0.7	2.3
	555	0.7	1.9

LC		NODE	Fxx	Fyy	Fxy	Fmax	Fmin	ANGLE
RC ENV~2	Max	Cent	-0.0	1.5	0.0	1.5	-0.0	-89.67
		547	-0.1	1.6	0.0	1.6	-0.1	-89.67
		548	-0.1	1.4	0.0	1.4	-0.1	-89.66
		556	0.0	1.4	0.0	1.4	-0.0	-89.67
		555	0.0	1.6	0.0	1.6	-0.0	-89.68
	Min	Cent	-2.8	0.6	-0.1	0.6	-2.8	-79.08
		547	-2.7	0.5	-0.1	0.5	-2.7	-78.60
		548	-2.7	0.6	-0.1	0.6	-2.7	-80.73
		556	-2.8	0.6	-0.1	0.6	-2.8	-79.52
		555	-2.8	0.5	-0.1	0.5	-2.8	-76.77

	NODE	Mxx	Myy	Mxy	Mmax	Mmin	ANGLE
Max	Cent	-6.3	-0.1	-0.3	0.0	-6.3	-82.28
	547	-5.0	0.9	-0.1	1.0	-5.1	-83.31
	548	-6.8	0.3	-0.3	0.4	-6.8	-82.42
	556	-7.6	-1.2	-0.4	-1.0	-7.6	-81.29
	555	-5.8	-0.4	-0.2	-0.2	-5.8	-82.07
Min	Cent	-8.8	-2.0	-1.9	-1.7	-9.2	-79.03
	547	-7.6	-1.2	-1.8	-0.9	-8.0	-79.75
	548	-9.0	-1.4	-2.1	-1.1	-9.5	-79.24
	556	-10.1	-2.9	-2.1	-2.5	-10.6	-78.35
	555	-8.6	-2.6	-1.8	-2.4	-9.0	-78.74

	NODE	Vxx	Vyy
Max	Cent	3.9	2.6
	547	3.9	2.5
	548	3.9	2.6
	556	4.0	2.6
	555	4.0	2.5
Min	Cent	1.9	2.3
	547	1.9	2.1
	548	1.9	2.5
	556	1.9	2.5
	555	1.9	2.1

ELEM	MAT	SEC	LC		NODE	Fxx	Fyy	Fxy	Fmax	Fmin	ANGLE
512	1	1	SX (RS)		Cent	1.7	0.2	0.5	1.8	0.1	16.24
					548	1.7	0.3	0.5	1.8	0.2	17.70
					549	1.7	0.2	0.5	1.8	0.1	16.26
					557	1.8	0.2	0.5	1.9	0.1	15.43
					556	1.8	0.3	0.5	1.9	0.2	16.74

	NODE	Mxx	Myy	Mxy	Mmax	Mmin	ANGLE
	Cent	2.3	1.1	0.1	2.3	1.1	3.49
	548	2.7	1.1	0.1	2.7	1.1	2.20
	549	2.3	1.1	0.1	2.3	1.1	6.59
	557	2.1	1.3	0.1	2.1	1.3	8.04
	556	2.6	1.1	0.1	2.6	1.1	5.32

	NODE	Vxx	Vyy
	Cent	2.2	0.3
	548	2.2	0.1

		549	2.2	0.5
		557	2.3	0.5
		556	2.3	0.1

LC		NODE	Fxx	Fyy	Fxy	Fmax	Fmin	ANGLE
SY (RS)		Cent	0.3	0.3	1.5	1.8	-1.2	44.92
		548	0.3	0.3	1.5	1.8	-1.2	45.70
		549	0.3	0.3	1.5	1.8	-1.2	45.86
		557	0.5	0.3	1.5	1.9	-1.1	43.89
		556	0.5	0.3	1.5	1.9	-1.1	43.73

		NODE	Mxx	Myy	Mxy	Mmax	Mmin	ANGLE
		Cent	0.2	1.4	0.5	1.6	0.0	69.23
		548	0.5	1.3	0.4	1.5	0.3	66.72
		549	0.1	1.7	0.5	1.9	-0.0	73.39
		557	0.2	1.3	0.6	1.5	-0.0	65.50
		556	0.3	1.5	0.5	1.7	0.1	69.60

		NODE	Vxx	Vyy
		Cent	0.3	0.5
		548	0.4	0.3
		549	0.4	1.2
		557	0.2	1.2
		556	0.2	0.3

LC		NODE	Fxx	Fyy	Fxy	Fmax	Fmin	ANGLE
RC ENV~1	Max	Cent	0.7	2.0	1.4	2.0	0.4	-88.79
		548	0.6	2.1	1.4	2.1	0.4	-88.82
		549	0.6	2.0	1.4	2.0	0.4	-88.80
		557	0.8	2.0	1.4	2.0	0.5	60.34
		556	0.8	2.1	1.4	2.1	0.5	-88.79
	Min	Cent	-3.3	0.5	-1.6	0.7	-3.3	-81.08
		548	-3.4	0.5	-1.6	0.6	-3.4	-80.76
		549	-3.4	0.5	-1.6	0.7	-3.4	-81.13
		557	-3.3	0.5	-1.6	0.7	-3.3	-81.24
		556	-3.3	0.5	-1.6	0.6	-3.3	-80.88

		NODE	Mxx	Myy	Mxy	Mmax	Mmin	ANGLE
	Max	Cent	-4.9	0.3	-0.2	0.4	-5.0	-77.83
		548	-4.2	0.8	-0.2	1.0	-4.3	-78.49
		549	-4.6	1.5	-0.3	1.8	-4.7	-76.58
		557	-5.4	-0.4	-0.2	0.0	-5.5	-77.29
		556	-5.1	-0.5	-0.0	-0.5	-5.1	-89.65
	Min	Cent	-12.6	-2.7	-3.9	-2.3	-13.8	-76.56
		548	-12.4	-2.1	-3.7	-1.6	-13.5	-78.95
		549	-11.4	-2.0	-4.2	-1.7	-12.8	-75.17
		557	-12.8	-3.1	-4.1	-2.8	-14.0	-82.69
		556	-14.0	-4.1	-3.6	-3.3	-15.0	-75.83

		NODE	Vxx	Vyy
	Max	Cent	2.1	3.1
		548	2.1	3.3
		549	2.1	3.5
		557	2.2	3.5
		556	2.2	3.3
	Min	Cent	-2.3	1.9
		548	-2.2	2.3
		549	-2.2	1.2
		557	-2.4	1.2
		556	-2.4	2.3

LC		NODE	Fxx	Fyy	Fxy	Fmax	Fmin	ANGLE
RC ENV~2	Max	Cent	-0.2	1.5	-0.0	1.5	-0.3	-88.74
		548	-0.3	1.5	-0.0	1.5	-0.3	-88.77
		549	-0.3	1.4	-0.0	1.4	-0.3	-88.75
		557	-0.2	1.4	-0.0	1.4	-0.2	-88.71
		556	-0.2	1.5	-0.0	1.5	-0.2	-88.74
	Min	Cent	-2.4	0.6	-0.1	0.7	-2.4	-83.68
		548	-2.4	0.6	-0.1	0.6	-2.4	-83.47

549	-2.4	0.7	-0.1	0.7	-2.4	-84.23
557	-2.3	0.7	-0.1	0.7	-2.3	-83.89
556	-2.3	0.6	-0.1	0.6	-2.3	-83.02

	NODE	Mxx	Myy	Mxy	Mmax	Mmin	ANGLE
Max	Cent	-7.2	-0.2	-0.7	0.1	-7.3	-78.88
	548	-6.8	0.3	-0.7	0.6	-6.9	-79.56
	549	-6.8	0.7	-0.9	1.1	-6.9	-77.68
	557	-7.5	-0.6	-0.7	-0.2	-7.6	-78.32
	556	-7.6	-1.2	-0.5	-1.0	-7.6	-80.17
Min	Cent	-9.3	-1.9	-2.6	-1.4	-10.0	-76.17
	548	-9.1	-1.4	-2.5	-0.9	-9.8	-77.03
	549	-8.4	-1.0	-2.8	-0.3	-9.3	-75.05
	557	-9.4	-2.3	-2.7	-1.7	-10.2	-75.45
	556	-10.3	-3.0	-2.4	-2.5	-10.9	-77.35

	NODE	Vxx	Vyy
Max	Cent	0.5	2.5
	548	0.5	2.6
	549	0.5	2.4
	557	0.4	2.4
	556	0.4	2.6
Min	Cent	-1.4	2.2
	548	-1.3	2.5
	549	-1.3	2.0
	557	-1.4	2.0
	556	-1.4	2.5

ELEM	MAT	SEC	LC	NODE	Fxx	Fyy	Fxy	Fmax	Fmin	ANGLE
513	1	1	SX (RS)	Cent	1.9	0.2	0.6	2.1	0.0	18.08
				549	1.8	0.2	0.6	2.0	0.0	19.14
				550	1.8	0.3	0.6	2.0	0.1	19.82
				558	2.0	0.3	0.6	2.2	0.1	17.76
				557	2.0	0.2	0.6	2.2	0.0	17.20

NODE	Mxx	Myy	Mxy	Mmax	Mmin	ANGLE
Cent	2.3	1.5	0.3	2.4	1.4	18.19
549	2.2	1.1	0.3	2.3	1.0	15.33
550	3.0	1.9	0.5	3.2	1.7	21.51
558	2.7	2.1	0.3	2.8	2.0	21.12
557	2.0	1.2	0.1	2.0	1.2	10.41

NODE	Vxx	Vyy
Cent	2.9	0.5
549	2.9	0.5
550	2.9	0.4
558	2.8	0.4
557	2.8	0.5

LC	NODE	Fxx	Fyy	Fxy	Fmax	Fmin	ANGLE
SY (RS)	Cent	0.2	0.5	1.4	1.8	-1.1	47.82
	549	0.2	0.4	1.4	1.7	-1.2	46.77
	550	0.2	0.7	1.4	1.9	-1.0	49.95
	558	0.3	0.7	1.4	2.0	-0.9	48.43
	557	0.3	0.4	1.4	1.8	-1.1	45.22

NODE	Mxx	Myy	Mxy	Mmax	Mmin	ANGLE
Cent	0.2	2.2	0.9	2.6	-0.1	68.69
549	0.6	1.6	0.5	1.9	0.4	67.79
550	0.4	2.5	0.8	2.8	0.1	72.16
558	0.6	3.6	1.4	4.2	0.0	68.74
557	0.3	1.2	1.1	2.0	-0.5	56.30

NODE	Vxx	Vyy
Cent	0.2	0.4
549	0.1	1.2
550	0.1	1.8
558	0.3	1.8
557	0.3	1.2

LC		NODE	Fxx	Fyy	Fxy	Fmax	Fmin	ANGLE
RC ENV~1	Max	Cent	0.9	2.0	1.4	2.0	0.4	-88.75
		549	0.8	2.1	1.4	2.1	0.3	-88.79
		550	0.8	1.9	1.4	2.1	0.4	65.17
		558	1.1	1.9	1.4	2.2	0.5	63.74
		557	1.1	2.1	1.4	2.1	0.5	-88.74
	Min	Cent	-2.9	0.4	-1.5	0.7	-3.0	-79.43
		549	-3.1	0.5	-1.5	0.7	-3.1	-79.19
		550	-3.1	0.1	-1.5	0.7	-3.1	-78.95
		558	-2.9	0.1	-1.5	0.7	-3.1	-79.43
		557	-2.9	0.5	-1.5	0.7	-3.1	-79.65

		NODE	Mxx	Myy	Mxy	Mmax	Mmin	ANGLE
	Max	Cent	-4.2	1.9	-0.3	2.6	-4.4	-73.36
		549	-4.9	1.3	-0.7	2.0	-5.0	-74.13
		550	-2.2	3.2	-0.7	4.7	-2.4	-68.95
		558	-3.2	3.5	0.3	3.8	-3.3	-73.15
		557	-6.0	-0.5	0.3	-0.1	-6.1	-76.90
	Min	Cent	-10.5	-2.6	-5.0	-1.8	-12.6	-67.29
		549	-11.9	-2.0	-5.0	-1.5	-13.7	-74.41
		550	-8.3	-1.9	-5.6	-0.8	-11.0	-64.94
		558	-9.4	-3.8	-5.0	-2.3	-11.6	-58.94
		557	-13.8	-3.3	-4.4	-2.8	-15.2	-81.97

		NODE	Vxx	Vyy
	Max	Cent	-0.3	2.3
		549	-0.0	3.5
		550	-0.0	3.1
		558	-0.5	3.1
		557	-0.5	3.5
	Min	Cent	-8.3	1.3
		549	-7.9	1.2
		550	-7.9	-0.4
		558	-8.6	-0.4
		557	-8.6	1.2

LC		NODE	Fxx	Fyy	Fxy	Fmax	Fmin	ANGLE
RC ENV~2	Max	Cent	-0.5	1.4	-0.0	1.4	-0.5	-88.71
		549	-0.5	1.5	-0.0	1.5	-0.5	-88.76
		550	-0.5	1.4	-0.0	1.4	-0.5	-88.73
		558	-0.5	1.4	-0.0	1.4	-0.5	-88.67
		557	-0.5	1.5	-0.0	1.5	-0.5	-88.70
	Min	Cent	-2.1	0.7	-0.1	0.7	-2.1	-85.22
		549	-2.2	0.7	-0.1	0.7	-2.2	-85.08
		550	-2.2	0.7	-0.1	0.8	-2.2	-85.46
		558	-2.0	0.7	-0.1	0.8	-2.0	-85.35
		557	-2.0	0.7	-0.1	0.7	-2.0	-84.95

		NODE	Mxx	Myy	Mxy	Mmax	Mmin	ANGLE
	Max	Cent	-6.5	1.0	-1.2	1.6	-6.8	-74.45
		549	-7.0	0.6	-1.2	1.3	-7.2	-75.19
		550	-5.0	2.2	-1.5	3.2	-5.4	-70.22
		558	-5.7	1.8	-1.1	2.5	-5.9	-74.28
		557	-8.0	-0.7	-0.8	-0.3	-8.1	-77.91
	Min	Cent	-7.8	-0.9	-3.4	-0.2	-9.1	-79.52
		549	-8.8	-1.1	-3.4	-0.2	-10.0	-72.95
		550	-6.2	0.1	-3.8	1.0	-7.9	-76.82
		558	-7.0	-0.4	-3.3	0.1	-8.4	-79.26
		557	-10.2	-2.4	-2.9	-1.7	-11.1	-75.18

		NODE	Vxx	Vyy
	Max	Cent	-3.0	1.8
		549	-2.8	2.4
		550	-2.8	1.3
		558	-3.2	1.3
		557	-3.2	2.4
	Min	Cent	-5.9	1.1
		549	-5.6	2.0
		550	-5.6	0.3
		558	-6.1	0.3

					557	-6.1	2.0			

ELEM	MAT	SEC	LC		NODE	Fxx	Fyy	Fxy	Fmax	Fmin	ANGLE
514	1	1	SX	(RS)	Cent	2.6	0.5	1.0	3.1	0.1	22.04
					550	2.2	0.2	1.0	2.6	-0.3	22.89
					551	2.2	0.9	1.0	2.8	0.4	29.55
					559	3.1	0.9	1.0	3.5	0.5	21.63
					558	3.1	0.2	1.0	3.4	-0.1	17.42

	NODE	Mxx	Myy	Mxy	Mmax	Mmin	ANGLE
	Cent	4.1	2.2	0.7	4.3	2.0	19.55
	550	3.2	2.0	0.5	3.4	1.8	20.05
	551	4.9	0.6	0.7	5.0	0.4	9.04
	559	6.6	5.6	0.7	7.0	5.2	27.20
	558	1.9	1.9	0.5	2.4	1.3	45.31

	NODE	Vxx	Vyy
	Cent	6.2	5.7
	550	4.5	0.4
	551	4.5	11.0
	559	8.0	11.0
	558	8.0	0.4

LC		NODE	Fxx	Fyy	Fxy	Fmax	Fmin	ANGLE
SY	(RS)	Cent	0.2	0.7	1.4	1.9	-1.0	49.28
		550	0.8	0.7	1.4	2.2	-0.7	44.38
		551	0.8	1.7	1.4	2.8	-0.3	53.92
		559	0.4	1.7	1.4	2.7	-0.5	56.99
		558	0.4	0.7	1.4	2.0	-0.9	47.88

	NODE	Mxx	Myy	Mxy	Mmax	Mmin	ANGLE
	Cent	0.2	1.4	1.0	2.0	-0.4	59.80
	550	1.3	2.3	1.5	3.4	0.3	54.98
	551	2.9	6.6	1.4	7.0	2.5	71.21
	559	1.5	7.1	0.1	7.1	1.5	89.05
	558	0.5	3.6	0.2	3.6	0.5	87.05

	NODE	Vxx	Vyy
	Cent	3.2	11.3
	550	6.0	1.8
	551	6.0	24.4
	559	0.5	24.4
	558	0.5	1.8

LC		NODE	Fxx	Fyy	Fxy	Fmax	Fmin	ANGLE
RC ENV~1	Max	Cent	1.7	2.0	1.4	2.5	0.6	40.29
		550	1.2	2.0	1.4	2.3	0.1	61.03
		551	1.2	2.6	1.4	3.2	0.5	67.45
		559	2.2	2.6	1.4	3.1	1.0	68.78
		558	2.2	2.0	1.4	2.8	0.5	29.05
	Min	Cent	-3.6	0.2	-1.5	0.6	-3.9	-75.62
		550	-3.2	0.1	-1.5	0.9	-3.4	-82.99
		551	-3.2	-0.9	-1.5	0.2	-3.5	-53.59
		559	-4.0	-0.9	-1.5	0.2	-4.3	-75.74
		558	-4.0	0.1	-1.5	0.9	-4.3	-83.43

	NODE	Mxx	Myy	Mxy	Mmax	Mmin	ANGLE
Max	Cent	0.0	5.7	-0.9	8.2	-0.3	-65.15
	550	-2.5	2.9	-0.5	5.2	-2.9	-66.71
	551	3.8	9.4	-1.2	12.7	1.7	-56.59
	559	4.3	10.3	-1.1	12.6	4.1	-65.97
	558	-5.2	3.2	-0.7	3.3	-5.3	-83.81
Min	Cent	-8.1	-0.7	-6.7	0.2	-9.9	-72.15
	550	-8.9	-1.8	-6.7	-0.6	-12.3	-73.04
	551	-6.0	-3.7	-7.9	0.1	-7.8	-46.05
	559	-9.0	-3.9	-6.5	-2.0	-9.8	-44.49
	558	-11.3	-4.0	-5.4	-3.5	-13.4	-70.87

	NODE	Vxx	Vyy
Max	Cent	-1.1	11.4
	550	-1.4	3.1
	551	-1.4	23.3
	559	0.7	23.3
	558	0.7	3.1
Min	Cent	-17.8	-11.2
	550	-17.8	-0.4
	551	-17.8	-25.5
	559	-17.9	-25.5
	558	-17.9	-0.4

LC		NODE	Fxx	Fyy	Fxy	Fmax	Fmin	ANGLE
RC ENV~2	Max	Cent	-0.8	1.5	0.0	1.5	-0.8	-89.49
		550	-0.7	1.5	0.0	1.5	-0.8	-89.51
		551	-0.7	1.5	0.0	1.5	-0.7	-87.43
		559	-0.8	1.5	0.0	1.5	-0.8	-87.38
		558	-0.8	1.5	0.0	1.5	-0.8	-89.47
	Min	Cent	-1.9	0.8	-0.2	0.8	-1.9	-85.83
		550	-2.0	0.7	-0.2	0.7	-2.0	-83.93
		551	-2.0	0.8	-0.2	0.8	-2.0	88.93
		559	-1.7	0.8	-0.2	0.8	-1.7	88.77
		558	-1.7	0.7	-0.2	0.7	-1.7	-84.22

	NODE	Mxx	Myy	Mxy	Mmax	Mmin	ANGLE
Max	Cent	-2.8	4.0	-1.9	5.7	-4.3	-66.31
	550	-5.6	2.0	-2.0	3.6	-6.2	-67.80
	551	2.1	5.9	-2.6	8.9	-1.3	-57.56
	559	0.4	7.3	-1.8	8.8	-1.1	-67.15
	558	-7.1	1.4	-1.2	2.1	-7.3	-75.32
Min	Cent	-4.7	1.3	-4.6	2.1	-7.0	-72.93
	550	-6.7	0.0	-4.6	1.2	-8.8	-73.75
	551	-1.5	2.2	-5.5	4.1	-4.7	-62.99
	559	-3.2	2.7	-4.5	3.6	-5.1	-73.52
	558	-8.4	-0.6	-3.6	-0.2	-9.7	-79.83

	NODE	Vxx	Vyy
Max	Cent	-7.2	0.5
	550	-7.3	1.3
	551	-7.3	-0.0
	559	-7.0	-0.0
	558	-7.0	1.3
Min	Cent	-12.8	-2.0
	550	-12.8	0.3
	551	-12.8	-4.3
	559	-12.8	-4.3
	558	-12.8	0.3

ELEM	MAT	SEC	LC		NODE	Fxx	Fyy	Fxy	Fmax	Fmin	ANGLE
515	1	1	SX (RS)		Cent	4.8	0.2	3.4	6.6	-1.6	27.98
					551	1.0	0.5	3.4	4.2	-2.6	42.84
					552	1.0	1.0	3.4	4.4	-2.4	44.74
					12	10.6	1.0	3.4	11.7	-0.1	17.52
					559	10.6	0.5	3.4	11.7	-0.5	16.91

	NODE	Mxx	Myy	Mxy	Mmax	Mmin	ANGLE
	Cent	12.7	3.2	3.0	13.6	2.3	16.40
	551	5.6	0.4	1.8	6.2	-0.1	17.45
	552	9.1	1.8	10.3	16.3	-5.4	35.27
	12	47.6	9.5	9.7	49.9	7.2	13.53
	559	6.5	5.5	2.4	8.4	3.6	39.14

	NODE	Vxx	Vyy
	Cent	23.2	5.5
	551	25.8	11.0
	552	25.8	0.0
	12	72.2	0.0
	559	72.2	11.0

LC		NODE	Fxx	Fyy	Fxy	Fmax	Fmin	ANGLE
SY (RS)		Cent	0.1	6.5	4.4	8.7	-2.1	63.17
		551	0.8	1.8	4.4	5.7	-3.1	48.02
		552	0.8	14.8	4.4	16.0	-0.4	74.00
		12	1.0	14.8	4.4	16.0	-0.3	73.84
		559	1.0	1.8	4.4	5.7	-3.0	47.43

		NODE	Mxx	Myy	Mxy	Mmax	Mmin	ANGLE
		Cent	3.6	13.7	3.1	14.6	2.7	74.33
		551	0.6	5.9	1.1	6.1	0.4	78.12
		552	6.4	9.0	1.7	9.8	5.6	64.23
		12	10.3	47.0	8.7	49.0	8.3	77.27
		559	1.8	7.1	9.3	14.1	-5.2	53.00

		NODE	Vxx	Vyy
		Cent	6.8	23.5
		551	11.4	24.4
		552	11.4	71.5
		12	2.2	71.5
		559	2.2	24.4

LC		NODE	Fxx	Fyy	Fxy	Fmax	Fmin	ANGLE
RC ENV~1	Max	Cent	3.9	7.3	4.3	9.1	-0.8	66.74
		551	0.1	2.6	4.3	5.7	-0.7	53.86
		552	0.1	15.4	4.3	16.5	-1.0	75.58
		12	9.7	15.4	4.3	16.5	0.4	75.45
		559	9.7	2.6	4.3	10.8	0.4	19.26
	Min	Cent	-5.7	-5.8	-4.4	0.8	-8.5	-83.58
		551	-2.9	-0.9	-4.4	1.2	-5.8	-84.41
		552	-2.9	-14.1	-4.4	-0.3	-15.6	-17.83
		12	-11.6	-14.1	-4.4	-0.5	-15.6	-18.04
		559	-11.6	-0.9	-4.4	1.2	-12.5	-84.65

		NODE	Mxx	Myy	Mxy	Mmax	Mmin	ANGLE
	Max	Cent	15.3	18.6	-0.4	21.5	8.1	-45.61
		551	5.6	8.9	-1.9	16.3	2.3	-48.52
		552	11.8	6.7	7.2	16.4	5.9	-25.72
		12	62.6	63.6	7.5	64.7	38.6	80.59
		559	0.2	9.5	6.3	11.9	0.1	68.93
	Min	Cent	-10.0	-8.8	-10.4	2.9	-12.9	-29.55
		551	-5.7	-2.8	-10.3	3.2	-8.5	-38.95
		552	-7.0	-11.4	-13.3	-2.0	-18.9	-26.54
		12	-32.5	-30.4	-11.9	7.9	-35.8	-15.96
		559	-12.9	-4.8	-12.2	-0.9	-18.8	-66.30

		NODE	Vxx	Vyy
	Max	Cent	3.7	7.3
		551	20.0	23.3
		552	20.0	40.1
		12	38.9	40.1
		559	38.9	23.3
	Min	Cent	-46.8	-39.8
		551	-31.6	-25.5
		552	-31.6	-102.8
		12	-105.5	-102.8
		559	-105.5	-25.5

LC		NODE	Fxx	Fyy	Fxy	Fmax	Fmin	ANGLE
RC ENV~2	Max	Cent	-0.6	1.3	0.3	1.3	-0.7	87.94
		551	-0.3	1.5	0.3	1.5	-0.6	-80.83
		552	-0.3	1.0	0.3	1.0	-0.7	88.15
		12	0.3	1.0	0.3	1.0	0.1	87.10
		559	0.3	1.5	0.3	1.5	0.2	87.67
	Min	Cent	-2.0	0.6	-0.6	0.6	-2.0	-84.25
		551	-2.1	0.8	-0.6	0.9	-2.1	-87.28
		552	-2.1	0.3	-0.6	0.4	-2.1	-83.03
		12	-2.7	0.3	-0.6	0.3	-2.8	-78.06
		559	-2.7	0.8	-0.6	0.9	-2.8	-87.29

		NODE	Mxx	Myy	Mxy	Mmax	Mmin	ANGLE

Max	Cent	9.0	9.6	-3.4	15.1	3.5	-46.43
	551	3.7	6.2	-3.7	11.4	-2.1	-49.31
	552	8.1	-2.2	-2.6	11.2	-3.7	-25.66
	12	32.4	29.5	-1.8	34.3	27.6	-32.44
	559	-5.6	6.0	-2.9	8.1	-7.1	-69.05
Min	Cent	1.6	4.9	-7.2	7.5	-2.7	-54.64
	551	-0.4	2.5	-7.2	5.5	-5.1	-57.10
	552	0.9	-3.7	-7.3	2.2	-7.2	-25.53
	12	9.9	16.4	-6.0	18.0	7.1	-59.33
	559	-7.6	1.8	-6.0	3.1	-9.8	-73.42

	NODE	Vxx	Vyy
Max	Cent	-18.5	-16.2
	551	-2.5	-0.0
	552	-2.5	-31.1
	12	-25.7	-31.1
	559	-25.7	-0.0
Min	Cent	-33.6	-28.2
	551	-12.6	-4.3
	552	-12.6	-53.7
	12	-60.1	-53.7
	559	-60.1	-4.3

ELEM	MAT	SEC	LC	NODE	Fxx	Fyy	Fxy	Fmax	Fmin	ANGLE
516	1	1	SX (RS)	Cent	2.6	0.5	1.0	3.1	0.1	22.07
				498	3.1	0.9	1.0	3.5	0.5	21.66
				499	3.1	0.2	1.0	3.4	-0.1	17.45
				561	2.2	0.2	1.0	2.6	-0.3	22.93
				560	2.2	0.9	1.0	2.8	0.4	29.58

	NODE	Mxx	Myy	Mxy	Mmax	Mmin	ANGLE
	Cent	4.1	2.2	0.7	4.3	2.0	19.56
	498	6.6	5.6	0.7	7.0	5.2	27.20
	499	1.9	1.9	0.5	2.4	1.3	45.30
	561	3.2	2.0	0.5	3.4	1.8	20.06
	560	4.9	0.6	0.7	5.0	0.4	9.05

	NODE	Vxx	Vyy
	Cent	6.2	5.7
	498	8.0	11.0
	499	8.0	0.4
	561	4.5	0.4
	560	4.5	11.0

LC	NODE	Fxx	Fyy	Fxy	Fmax	Fmin	ANGLE
SY (RS)	Cent	0.2	0.6	1.4	1.9	-1.1	48.54
	498	0.4	1.7	1.4	2.6	-0.5	56.60
	499	0.4	0.7	1.4	2.0	-0.9	47.61
	561	0.8	0.7	1.4	2.2	-0.7	44.12
	560	0.8	1.7	1.4	2.8	-0.3	53.53

	NODE	Mxx	Myy	Mxy	Mmax	Mmin	ANGLE
	Cent	0.2	1.4	1.0	2.0	-0.4	59.80
	498	1.5	7.1	0.1	7.1	1.5	89.05
	499	0.5	3.6	0.2	3.6	0.5	87.05
	561	1.3	2.3	1.5	3.4	0.3	54.98
	560	2.9	6.6	1.4	7.0	2.5	71.21

	NODE	Vxx	Vyy
	Cent	3.2	11.3
	498	0.5	24.4
	499	0.5	1.8
	561	6.0	1.8
	560	6.0	24.4

LC		NODE	Fxx	Fyy	Fxy	Fmax	Fmin	ANGLE
RC ENV~1	Max	Cent	1.7	2.1	1.4	2.5	0.6	40.48

		498	2.2	2.6	1.4	3.1	1.1	68.75
		499	2.2	1.9	1.4	2.8	0.5	28.86
		561	1.2	1.9	1.4	2.3	0.1	61.02
		560	1.2	2.6	1.4	3.2	0.5	67.54
	Min	Cent	-3.6	0.3	-1.5	0.6	-3.8	-75.51
		498	-4.0	-0.8	-1.5	0.3	-4.3	-75.64
		499	-4.0	0.1	-1.5	0.9	-4.2	-77.51
		561	-3.1	0.1	-1.5	0.9	-3.4	-89.79
		560	-3.1	-0.8	-1.5	0.3	-3.5	-72.58

	NODE	Mxx	Myy	Mxy	Mmax	Mmin	ANGLE
Max	Cent	1.7	7.6	-0.4	8.8	1.6	-70.46
	498	6.0	13.0	-0.6	13.9	5.9	-73.74
	499	-2.9	6.3	-0.3	6.4	-2.9	-86.19
	561	-0.9	4.4	-0.2	4.9	-1.2	-69.63
	560	5.6	10.9	-0.7	12.2	3.7	-54.35
Min	Cent	-6.4	1.5	-3.6	2.1	-7.0	-75.35
	498	-7.3	-1.2	-3.2	-0.2	-7.8	-54.25
	499	-7.2	-0.9	-2.2	-0.7	-7.7	-77.36
	561	-7.3	-1.0	-3.8	0.6	-7.9	-74.94
	560	-4.7	-2.2	-4.8	1.0	-5.9	-47.34

	NODE	Vxx	Vyy
Max	Cent	16.4	13.7
	498	16.1	27.6
	499	16.1	3.5
	561	16.7	3.5
	560	16.7	27.6
Min	Cent	0.4	-8.9
	498	-1.6	-21.2
	499	-1.6	-0.2
	561	0.8	-0.2
	560	0.8	-21.2

LC		NODE	Fxx	Fyy	Fxy	Fmax	Fmin	ANGLE
RC ENV~2	Max	Cent	-0.4	1.5	0.0	1.5	-0.5	-87.41
		498	-0.3	1.6	0.0	1.6	-0.3	-87.46
		499	-0.3	1.4	0.0	1.4	-0.3	-87.29
		561	-0.6	1.4	0.0	1.4	-0.6	-87.36
		560	-0.6	1.6	0.0	1.6	-0.6	-87.53
	Min	Cent	-2.1	0.7	-0.2	0.7	-2.1	88.17
		498	-2.0	0.7	-0.2	0.7	-2.0	87.83
		499	-2.0	0.7	-0.2	0.7	-2.0	-89.49
		561	-2.1	0.7	-0.2	0.7	-2.1	-89.55
		560	-2.1	0.7	-0.2	0.7	-2.1	88.27

	NODE	Mxx	Myy	Mxy	Mmax	Mmin	ANGLE
Max	Cent	-0.7	5.7	-1.5	6.4	-1.5	-71.69
	498	2.4	9.5	-1.3	10.1	1.8	-74.75
	499	-4.8	3.8	-0.9	4.0	-4.9	-81.94
	561	-3.7	2.8	-1.6	3.7	-4.4	-70.84
	560	3.7	6.5	-2.0	8.8	1.5	-56.29
Min	Cent	-3.0	1.8	-2.5	2.7	-3.7	-67.46
	498	-1.8	3.9	-2.3	4.4	-2.3	-74.42
	499	-5.4	0.6	-1.6	1.0	-5.7	-76.21
	561	-4.6	-0.3	-2.7	0.8	-5.6	-65.58
	560	-0.6	2.8	-3.4	4.6	-1.9	-63.95

	NODE	Vxx	Vyy
Max	Cent	11.7	4.4
	498	11.5	6.3
	499	11.5	2.5
	561	12.0	2.5
	560	12.0	6.3
Min	Cent	5.6	1.7
	498	5.1	1.6
	499	5.1	1.6
	561	6.2	1.6
	560	6.2	1.6

ELEM	MAT	SEC	LC		NODE	Fxx	Fyy	Fxy	Fmax	Fmin	ANGLE

```
517      1      1       SX (RS)   Cent        1.9        0.2        0.6        2.1        0.0      18.06
                                  499        2.0        0.3        0.6        2.2        0.1      17.74
                                  500        2.0        0.2        0.6        2.2        0.0      17.18
                                  562        1.8        0.2        0.6        2.0        0.0      19.13
                                  561        1.8        0.3        0.6        2.0        0.1      19.80

                                 NODE        Mxx        Myy        Mxy       Mmax       Mmin      ANGLE
                            ---- ------ ---------- ---------- ---------- ---------- ---------- ----------
                                 Cent        2.3        1.5        0.3        2.4        1.4      18.19
                                  499        2.7        2.1        0.3        2.8        2.0      21.14
                                  500        2.0        1.2        0.2        2.0        1.2      10.41
                                  562        2.2        1.1        0.3        2.3        1.0      15.32
                                  561        3.0        1.9        0.5        3.2        1.7      21.52

                                 NODE        Vxx        Vyy
                            ---- ------ ---------- ----------
                                 Cent        2.9        0.5
                                  499        2.8        0.4
                                  500        2.8        0.5
                                  562        2.9        0.5
                                  561        2.9        0.4


                       LC        NODE        Fxx        Fyy        Fxy       Fmax       Fmin      ANGLE
                -------- ---- ------ ---------- ---------- ---------- ---------- ---------- ----------
                       SY (RS)   Cent        0.2        0.4        1.4        1.7       -1.1      47.23
                                  499        0.3        0.7        1.4        1.9       -0.9      48.12
                                  500        0.3        0.3        1.4        1.7       -1.1      44.21
                                  562        0.2        0.3        1.4        1.7       -1.2      45.79
                                  561        0.2        0.7        1.4        1.9       -1.0      49.68

                                 NODE        Mxx        Myy        Mxy       Mmax       Mmin      ANGLE
                            ---- ------ ---------- ---------- ---------- ---------- ---------- ----------
                                 Cent        0.2        2.2        0.9        2.6       -0.1      68.69
                                  499        0.6        3.6        1.4        4.2        0.0      68.74
                                  500        0.3        1.2        1.1        2.0       -0.5      56.30
                                  562        0.6        1.6        0.5        1.9        0.4      67.79
                                  561        0.4        2.5        0.8        2.8        0.1      72.16

                                 NODE        Vxx        Vyy
                            ---- ------ ---------- ----------
                                 Cent        0.2        0.4
                                  499        0.3        1.8
                                  500        0.3        1.2
                                  562        0.1        1.2
                                  561        0.1        1.8


                       LC        NODE        Fxx        Fyy        Fxy       Fmax       Fmin      ANGLE
                -------- ---- ------ ---------- ---------- ---------- ---------- ---------- ----------
                RC ENV~1  Max   Cent        0.9        1.9        1.4        1.9        0.5      63.29
                                  499        1.1        2.0        1.4        2.2        0.6      63.57
                                  500        1.1        1.9        1.4        1.9        0.5     -88.46
                                  562        0.8        1.9        1.4        1.9        0.4     -88.54
                                  561        0.8        2.0        1.4        2.1        0.4      65.09
                            Min   Cent       -2.8        0.4       -1.5        0.8       -3.0     -79.36
                                  499       -2.9        0.2       -1.5        0.7       -3.0     -79.33
                                  500       -2.9        0.6       -1.5        0.8       -3.0     -79.58
                                  562       -2.8        0.6       -1.5        0.8       -2.9     -79.14
                                  561       -2.8        0.2       -1.5        0.7       -2.9     -78.87

                                 NODE        Mxx        Myy        Mxy       Mmax       Mmin      ANGLE
                            ---- ------ ---------- ---------- ---------- ---------- ---------- ----------
                            Max   Cent       -2.2        4.1       -0.0        4.1       -2.3     -89.78
                                  499       -1.0        6.6        0.6        6.6       -1.0      86.71
                                  500       -3.6        2.6        0.4        2.7       -3.6     -85.08
                                  562       -3.0        2.7       -0.5        2.8       -3.1     -85.81
                                  561       -0.5        4.7       -0.4        4.7       -0.6     -86.84
                            Min   Cent       -6.9       -1.1       -2.3       -0.3       -7.2     -70.13
                                  499       -6.3       -0.7       -2.2        0.4       -6.5     -64.16
                                  500       -9.1       -1.7       -1.8       -1.2       -9.3     -76.45
                                  562       -8.1       -2.3       -2.4       -1.4       -8.7     -69.22
                                  561       -6.6       -0.8       -2.9        0.5       -7.0     -65.94

                                 NODE        Vxx        Vyy
                            ---- ------ ---------- ----------
                            Max   Cent        7.6        2.6
                                  499        7.9        3.5
                                  500        7.9        1.9
```

		562	7.3	1.9
		561	7.3	3.5
	Min	Cent	-0.1	0.7
		499	0.1	-0.2
		500	0.1	-0.4
		562	-0.3	-0.4
		561	-0.3	-0.2

LC		NODE	Fxx	Fyy	Fxy	Fmax	Fmin	ANGLE
RC ENV~2	Max	Cent	-0.8	1.4	-0.0	1.4	-0.8	-87.63
		499	-0.7	1.4	-0.0	1.4	-0.7	-87.61
		500	-0.7	1.4	-0.0	1.4	-0.7	-88.43
		562	-0.8	1.4	-0.0	1.4	-0.8	-88.50
		561	-0.8	1.4	-0.0	1.4	-0.8	-87.69
	Min	Cent	-1.9	0.7	-0.1	0.7	-1.9	-88.11
		499	-1.9	0.7	-0.1	0.7	-1.9	-88.81
		500	-1.9	0.8	-0.1	0.8	-1.9	-86.62
		562	-2.0	0.8	-0.1	0.8	-2.0	-86.73
		561	-2.0	0.7	-0.1	0.7	-2.0	-88.89

		NODE	Mxx	Myy	Mxy	Mmax	Mmin	ANGLE
	Max	Cent	-4.5	2.4	-1.0	2.6	-4.6	-79.55
		499	-3.1	4.2	-0.8	4.4	-3.3	-81.20
		500	-5.6	1.7	-0.7	1.7	-5.6	-85.01
		562	-5.2	1.3	-1.0	1.5	-5.4	-81.14
		561	-2.8	3.0	-1.2	3.5	-3.3	-73.70
	Min	Cent	-4.9	-0.3	-1.6	0.2	-5.3	-72.57
		499	-4.1	0.9	-1.5	1.3	-4.5	-74.57
		500	-6.8	-0.8	-1.2	-0.5	-6.9	-77.36
		562	-6.1	-1.3	-1.7	-0.7	-6.5	-71.35
		561	-3.9	-0.1	-2.0	0.7	-4.6	-67.14

		NODE	Vxx	Vyy
	Max	Cent	5.4	1.9
		499	5.6	2.5
		500	5.6	1.3
		562	5.2	1.3
		561	5.2	2.5
	Min	Cent	2.2	1.1
		499	2.4	1.6
		500	2.4	0.7
		562	2.1	0.7
		561	2.1	1.6

ELEM	MAT	SEC	LC		NODE	Fxx	Fyy	Fxy	Fmax	Fmin	ANGLE
518	1	1	SX (RS)		Cent	1.7	0.2	0.5	1.8	0.1	16.19
					500	1.8	0.2	0.5	1.9	0.1	15.39
					501	1.8	0.3	0.5	1.9	0.2	16.69
					563	1.7	0.3	0.5	1.8	0.2	17.64
					562	1.7	0.2	0.5	1.8	0.1	16.22

		NODE	Mxx	Myy	Mxy	Mmax	Mmin	ANGLE
		Cent	2.3	1.1	0.1	2.3	1.1	3.43
		500	2.1	1.3	0.1	2.1	1.3	8.03
		501	2.6	1.1	0.1	2.6	1.1	5.27
		563	2.7	1.1	0.1	2.7	1.1	2.09
		562	2.3	1.1	0.1	2.3	1.1	6.57

		NODE	Vxx	Vyy
		Cent	2.2	0.3
		500	2.3	0.5
		501	2.3	0.1
		563	2.2	0.1
		562	2.2	0.5

LC		NODE	Fxx	Fyy	Fxy	Fmax	Fmin	ANGLE
SY (RS)		Cent	0.3	0.2	1.5	1.8	-1.2	44.03
		500	0.5	0.2	1.5	1.9	-1.2	42.90
		501	0.5	0.3	1.5	1.9	-1.2	42.99

563	0.3	0.3	1.5	1.8	-1.3	44.98
562	0.3	0.2	1.5	1.8	-1.3	44.88

NODE	Mxx	Myy	Mxy	Mmax	Mmin	ANGLE
Cent	0.2	1.4	0.5	1.6	0.0	69.23
500	0.2	1.3	0.6	1.5	-0.0	65.50
501	0.3	1.5	0.5	1.7	0.1	69.60
563	0.5	1.3	0.4	1.5	0.3	66.71
562	0.1	1.7	0.5	1.9	-0.0	73.39

NODE	Vxx	Vyy
Cent	0.3	0.5
500	0.2	1.2
501	0.2	0.3
563	0.4	0.3
562	0.4	1.2

LC		NODE	Fxx	Fyy	Fxy	Fmax	Fmin	ANGLE
RC ENV~1	Max	Cent	0.7	1.9	1.4	1.9	0.5	60.79
		500	0.8	1.9	1.4	1.9	0.5	59.64
		501	0.8	1.9	1.4	1.9	0.5	59.79
		563	0.6	1.9	1.4	1.9	0.4	-88.59
		562	0.6	1.9	1.4	1.9	0.4	-87.69
	Min	Cent	-2.7	0.6	-1.6	0.7	-2.8	-81.10
		500	-2.7	0.6	-1.6	0.7	-2.8	-81.25
		501	-2.7	0.5	-1.6	0.6	-2.8	-80.89
		563	-2.8	0.5	-1.6	0.6	-2.8	-80.80
		562	-2.8	0.6	-1.6	0.7	-2.8	-81.16

	NODE	Mxx	Myy	Mxy	Mmax	Mmin	ANGLE
Max	Cent	-2.8	2.6	-0.1	2.6	-2.9	-88.92
	500	-3.0	2.8	-0.1	2.8	-3.1	-84.66
	501	-2.7	2.6	-0.0	2.6	-2.8	-89.78
	563	-2.4	2.1	-0.2	2.1	-2.5	-88.15
	562	-2.7	2.9	-0.3	2.9	-2.8	-88.02
Min	Cent	-8.3	-2.3	-1.5	-1.9	-8.4	-75.87
	500	-7.9	-1.5	-1.6	-1.1	-8.1	-75.41
	501	-9.3	-2.4	-1.3	-2.2	-9.4	-79.76
	563	-8.6	-3.1	-1.5	-2.7	-8.8	-74.27
	562	-7.3	-2.2	-1.8	-1.6	-7.6	-70.63

	NODE	Vxx	Vyy
Max	Cent	2.4	1.7
	500	2.4	1.9
	501	2.4	1.5
	563	2.3	1.5
	562	2.3	1.9
Min	Cent	-2.1	0.1
	500	-2.1	-0.4
	501	-2.1	0.3
	563	-2.1	0.3
	562	-2.1	-0.4

LC		NODE	Fxx	Fyy	Fxy	Fmax	Fmin	ANGLE
RC ENV~2	Max	Cent	-1.0	1.4	-0.0	1.4	-1.0	-88.51
		500	-0.9	1.4	-0.0	1.4	-0.9	-87.63
		501	-0.9	1.4	-0.0	1.4	-0.9	-88.50
		563	-1.0	1.4	-0.0	1.4	-1.0	-88.55
		562	-1.0	1.4	-0.0	1.4	-1.0	-87.71
	Min	Cent	-2.0	0.7	-0.1	0.7	-2.0	-86.62
		500	-1.9	0.7	-0.1	0.7	-1.9	-88.17
		501	-1.9	0.7	-0.1	0.7	-1.9	-86.47
		563	-2.0	0.7	-0.1	0.7	-2.0	-86.61
		562	-2.0	0.7	-0.1	0.7	-2.0	-88.23

	NODE	Mxx	Myy	Mxy	Mmax	Mmin	ANGLE
Max	Cent	-5.1	1.4	-0.6	1.4	-5.1	-84.26
	500	-5.1	1.8	-0.6	1.8	-5.2	-84.91
	501	-5.1	1.3	-0.5	1.4	-5.2	-85.51
	563	-4.8	1.1	-0.6	1.1	-5.0	-83.97

562	-4.9	1.4	-0.8	1.5	-5.0	-83.13
Min Cent	-6.2	-1.2	-1.1	-1.0	-6.3	-77.79
500	-5.9	-0.7	-1.1	-0.5	-6.0	-77.37
501	-6.9	-1.3	-0.9	-1.2	-6.9	-81.05
563	-6.4	-1.8	-1.1	-1.5	-6.5	-76.57
562	-5.5	-1.2	-1.3	-0.8	-5.7	-73.44

	NODE	Vxx	Vyy
Max	Cent	1.4	1.2
	500	1.4	1.3
	501	1.4	1.1
	563	1.3	1.1
	562	1.3	1.3
Min	Cent	-0.5	0.7
	500	-0.5	0.7
	501	-0.5	0.6
	563	-0.5	0.6
	562	-0.5	0.7

ELEM	MAT	SEC	LC	NODE	Fxx	Fyy	Fxy	Fmax	Fmin	ANGLE
519	1	1	SX (RS)	Cent	1.9	0.4	0.4	2.0	0.3	13.66
				501	1.9	0.3	0.4	2.0	0.2	12.20
				502	1.9	0.6	0.4	2.0	0.5	14.47
				564	1.8	0.6	0.4	1.9	0.5	15.56
				563	1.8	0.3	0.4	1.9	0.2	12.99

	NODE	Mxx	Myy	Mxy	Mmax	Mmin	ANGLE
	Cent	3.0	1.2	0.2	3.0	1.2	5.72
	501	2.4	1.1	0.2	2.5	1.1	7.99
	502	3.5	1.5	0.3	3.5	1.5	7.58
	564	3.5	1.4	0.2	3.6	1.3	5.00
	563	2.6	1.1	0.1	2.6	1.1	3.91

	NODE	Vxx	Vyy
	Cent	2.1	0.2
	501	2.1	0.1
	502	2.1	0.4
	564	2.0	0.4
	563	2.0	0.1

LC	NODE	Fxx	Fyy	Fxy	Fmax	Fmin	ANGLE
SY (RS)	Cent	0.5	0.2	1.7	2.0	-1.3	42.58
	501	0.6	0.2	1.7	2.1	-1.3	41.78
	502	0.6	0.2	1.7	2.1	-1.2	42.04
	564	0.5	0.2	1.7	2.0	-1.3	43.22
	563	0.5	0.2	1.7	2.0	-1.3	42.96

	NODE	Mxx	Myy	Mxy	Mmax	Mmin	ANGLE
	Cent	0.3	1.3	0.5	1.5	0.1	69.50
	501	0.3	1.5	0.5	1.7	0.1	70.81
	502	0.4	1.2	0.5	1.4	0.2	64.28
	564	0.4	1.4	0.4	1.5	0.2	69.16
	563	0.2	1.3	0.4	1.5	0.1	71.19

	NODE	Vxx	Vyy
	Cent	0.3	0.1
	501	0.3	0.3
	502	0.3	0.4
	564	0.3	0.4
	563	0.3	0.3

LC		NODE	Fxx	Fyy	Fxy	Fmax	Fmin	ANGLE
RC ENV~1	Max	Cent	0.8	1.9	1.6	2.1	0.6	58.99
		501	0.8	1.8	1.6	2.1	0.6	58.14
		502	0.8	2.0	1.6	2.1	0.7	58.69
		564	0.7	2.0	1.6	2.1	0.6	59.69
		563	0.7	1.8	1.6	2.0	0.5	59.16
	Min	Cent	-3.2	0.5	-1.7	0.5	-3.2	-83.04

501	-3.3	0.6	-1.7	0.6	-3.3	-83.36
502	-3.3	0.3	-1.7	0.4	-3.3	-82.89
564	-3.2	0.3	-1.7	0.4	-3.2	-82.66
563	-3.2	0.6	-1.7	0.6	-3.2	-83.17

	NODE	Mxx	Myy	Mxy	Mmax	Mmin	ANGLE
Max	Cent	-1.4	2.5	0.0	2.5	-1.4	89.63
	501	-2.8	2.6	-0.0	2.6	-2.8	-89.94
	502	-0.3	3.1	0.1	3.1	-0.3	-88.17
	564	-0.0	2.6	0.1	2.6	-0.0	-87.15
	563	-2.4	2.2	-0.0	2.2	-2.4	-89.69
Min	Cent	-7.8	-2.5	-0.9	-2.4	-7.8	-80.62
	501	-9.0	-2.4	-1.1	-2.2	-9.1	-81.05
	502	-7.3	-2.0	-0.9	-2.0	-7.4	-82.65
	564	-7.1	-2.8	-0.7	-2.7	-7.2	-79.75
	563	-8.3	-3.0	-1.0	-2.8	-8.4	-78.63

	NODE	Vxx	Vyy
Max	Cent	-0.4	1.8
	501	-0.3	1.5
	502	-0.3	2.0
	564	-0.4	2.0
	563	-0.4	1.5
Min	Cent	-4.6	0.5
	501	-4.6	0.3
	502	-4.6	0.4
	564	-4.5	0.4
	563	-4.5	0.3

LC		NODE	Fxx	Fyy	Fxy	Fmax	Fmin	ANGLE
RC ENV~2	Max	Cent	-0.8	1.4	0.0	1.4	-0.8	-89.50
		501	-0.8	1.3	0.0	1.3	-0.8	-89.49
		502	-0.8	1.5	0.0	1.5	-0.8	-89.51
		564	-0.8	1.5	0.0	1.5	-0.8	-89.51
		563	-0.8	1.3	0.0	1.3	-0.8	-89.49
	Min	Cent	-2.3	0.7	-0.1	0.7	-2.3	-86.85
		501	-2.3	0.7	-0.1	0.7	-2.3	-86.87
		502	-2.3	0.6	-0.1	0.6	-2.3	-85.52
		564	-2.3	0.6	-0.1	0.6	-2.3	-85.74
		563	-2.3	0.7	-0.1	0.7	-2.3	-86.96

	NODE	Mxx	Myy	Mxy	Mmax	Mmin	ANGLE
Max	Cent	-4.0	1.5	-0.3	1.5	-4.1	-86.25
	501	-5.2	1.3	-0.4	1.4	-5.2	-85.80
	502	-3.2	1.9	-0.2	1.9	-3.3	-86.43
	564	-2.9	1.5	-0.2	1.5	-2.9	-86.76
	563	-4.8	1.1	-0.4	1.1	-4.9	-86.06
Min	Cent	-5.8	-1.4	-0.6	-1.3	-5.8	-82.00
	501	-6.7	-1.3	-0.8	-1.2	-6.7	-82.14
	502	-5.3	-1.0	-0.6	-1.0	-5.3	-83.57
	564	-5.0	-1.5	-0.5	-1.5	-5.0	-81.66
	563	-6.2	-1.8	-0.7	-1.6	-6.2	-80.48

	NODE	Vxx	Vyy
Max	Cent	-1.7	1.3
	501	-1.7	1.1
	502	-1.7	1.4
	564	-1.7	1.4
	563	-1.7	1.1
Min	Cent	-3.4	0.7
	501	-3.4	0.6
	502	-3.4	0.8
	564	-3.3	0.8
	563	-3.3	0.6

ELEM	MAT	SEC	LC		NODE	Fxx	Fyy	Fxy	Fmax	Fmin	ANGLE
520	1	1	SX (RS)		Cent	2.4	0.6	0.4	2.4	0.6	12.08
					502	2.5	0.4	0.4	2.6	0.4	10.24
					503	2.5	0.9	0.4	2.6	0.8	12.49
					565	2.2	0.9	0.4	2.3	0.8	14.66
					564	2.2	0.4	0.4	2.3	0.4	11.70

	NODE	Mxx	Myy	Mxy	Mmax	Mmin	ANGLE
	Cent	4.0	1.8	0.4	4.1	1.8	9.16
	502	3.2	1.5	0.3	3.3	1.4	10.40
	503	4.6	2.3	0.4	4.7	2.2	9.72
	565	4.9	2.2	0.5	4.9	2.1	9.53
	564	3.4	1.3	0.3	3.5	1.3	9.05

	NODE	Vxx	Vyy
	Cent	2.4	0.3
	502	2.3	0.4
	503	2.3	0.3
	565	2.4	0.3
	564	2.4	0.4

LC		NODE	Fxx	Fyy	Fxy	Fmax	Fmin	ANGLE
SY (RS)		Cent	0.7	0.1	1.8	2.3	-1.4	40.37
		502	0.8	0.2	1.8	2.4	-1.4	40.42
		503	0.8	0.3	1.8	2.4	-1.3	41.34
		565	0.7	0.3	1.8	2.4	-1.3	42.19
		564	0.7	0.2	1.8	2.3	-1.4	41.27

	NODE	Mxx	Myy	Mxy	Mmax	Mmin	ANGLE
	Cent	0.4	1.6	0.6	1.9	0.2	67.49
	502	0.3	1.2	0.7	1.6	-0.1	61.27
	503	0.7	2.4	0.8	2.7	0.3	67.76
	565	0.6	1.7	0.5	1.9	0.4	67.55
	564	0.4	1.3	0.4	1.5	0.2	69.09

	NODE	Vxx	Vyy
	Cent	0.4	0.3
	502	0.4	0.4
	503	0.4	1.1
	565	0.4	1.1
	564	0.4	0.4

LC		NODE	Fxx	Fyy	Fxy	Fmax	Fmin	ANGLE
RC ENV~1	Max	Cent	1.0	2.0	1.9	2.2	0.8	56.57
		502	1.1	1.8	1.9	2.3	0.8	56.70
		503	1.1	2.1	1.9	2.4	0.9	57.82
		565	0.9	2.1	1.9	2.4	0.8	58.01
		564	0.9	1.8	1.9	2.3	0.7	56.90
	Min	Cent	-4.0	0.2	-1.8	0.3	-4.0	-84.62
		502	-4.2	0.4	-1.8	0.4	-4.2	-85.06
		503	-4.2	0.0	-1.8	0.1	-4.2	-84.63
		565	-3.9	0.0	-1.8	0.1	-3.9	-84.09
		564	-3.9	0.4	-1.8	0.4	-3.9	-84.62

	NODE	Mxx	Myy	Mxy	Mmax	Mmin	ANGLE
Max	Cent	1.7	3.9	0.5	3.9	1.7	83.04
	502	-0.9	3.0	0.4	3.0	-0.9	-89.93
	503	3.9	5.4	0.7	5.5	3.8	83.00
	565	4.4	4.6	0.9	5.1	3.9	51.27
	564	-0.3	2.5	0.4	2.5	-0.4	84.50
Min	Cent	-6.3	-1.6	-0.7	-1.6	-6.3	-88.84
	502	-7.8	-2.1	-1.0	-2.1	-7.8	-85.05
	503	-5.4	-0.2	-1.0	-0.2	-5.4	-88.82
	565	-5.4	-1.4	-0.4	-1.3	-5.4	71.53
	564	-7.2	-2.8	-0.5	-2.8	-7.2	-88.56

	NODE	Vxx	Vyy
Max	Cent	-3.1	2.5
	502	-3.2	2.0
	503	-3.2	3.1
	565	-3.0	3.1
	564	-3.0	2.0
Min	Cent	-10.3	0.7
	502	-10.5	0.4
	503	-10.5	0.2

		565	-10.2	0.2		
		564	-10.2	0.4		

LC		NODE	Fxx	Fyy	Fxy	Fmax	Fmin	ANGLE
RC ENV~2	Max	Cent	-0.6	1.4	0.1	1.4	-0.7	88.46
		502	-0.6	1.3	0.1	1.4	-0.6	88.47
		503	-0.6	1.5	0.1	1.5	-0.6	88.53
		565	-0.7	1.5	0.1	1.5	-0.7	88.45
		564	-0.7	1.3	0.1	1.4	-0.7	88.39
	Min	Cent	-2.9	0.6	-0.1	0.6	-2.9	-85.65
		502	-3.0	0.6	-0.1	0.6	-3.0	-88.15
		503	-3.0	0.5	-0.1	0.5	-3.0	-85.21
		565	-2.8	0.5	-0.1	0.5	-2.8	-85.46
		564	-2.8	0.6	-0.1	0.6	-2.8	-88.16

		NODE	Mxx	Myy	Mxy	Mmax	Mmin	ANGLE
	Max	Cent	-1.4	2.4	0.3	2.4	-1.4	-89.46
		502	-3.7	1.8	-0.1	1.8	-3.8	-87.02
		503	0.5	3.9	0.2	3.9	0.5	88.13
		565	0.9	2.9	0.6	3.1	0.8	76.58
		564	-3.2	1.5	0.3	1.5	-3.2	89.90
	Min	Cent	-3.7	-0.7	-0.1	-0.7	-3.7	-88.82
		502	-5.7	-1.1	-0.5	-1.0	-5.7	-85.50
		503	-2.3	0.4	-0.2	0.4	-2.3	-88.56
		565	-2.0	-0.5	0.1	-0.4	-2.0	79.32
		564	-5.1	-1.6	-0.1	-1.6	-5.1	-88.78

		NODE	Vxx	Vyy
	Max	Cent	-4.7	1.8
		502	-4.8	1.4
		503	-4.8	2.2
		565	-4.6	2.2
		564	-4.6	1.4
	Min	Cent	-7.6	1.0
		502	-7.7	0.8
		503	-7.7	1.2
		565	-7.5	1.2
		564	-7.5	0.8

ELEM	MAT	SEC	LC		NODE	Fxx	Fyy	Fxy	Fmax	Fmin	ANGLE
521	1	1	SX (RS)		Cent	3.4	1.1	0.8	3.7	0.9	16.52
					503	4.0	0.7	0.8	4.1	0.5	12.34
					504	4.0	1.6	0.8	4.2	1.4	16.33
					566	2.9	1.6	0.8	3.3	1.3	24.40
					565	2.9	0.7	0.8	3.2	0.4	16.93

		NODE	Mxx	Myy	Mxy	Mmax	Mmin	ANGLE
		Cent	5.8	2.4	0.7	5.9	2.3	10.68
		503	3.9	2.2	0.6	4.1	2.0	16.58
		504	7.8	5.0	0.7	8.0	4.8	13.00
		566	6.5	0.6	0.6	6.6	0.5	5.84
		565	5.0	2.2	0.5	5.0	2.1	9.57

		NODE	Vxx	Vyy
		Cent	4.7	4.3
		503	6.0	0.3
		504	6.0	8.2
		566	3.5	8.2
		565	3.5	0.3

LC		NODE	Fxx	Fyy	Fxy	Fmax	Fmin	ANGLE
SY (RS)		Cent	1.1	0.5	2.1	3.0	-1.3	40.97
		503	1.3	0.4	2.1	3.0	-1.4	38.98
		504	1.3	1.4	2.1	3.4	-0.8	45.93
		566	1.2	1.4	2.1	3.4	-0.8	46.53
		565	1.2	0.4	2.1	2.9	-1.4	39.55

		NODE	Mxx	Myy	Mxy	Mmax	Mmin	ANGLE

Cent	0.8	1.1	0.7	1.7	0.2	51.78
503	0.5	2.4	0.4	2.4	0.5	78.61
504	1.4	3.4	0.4	3.4	1.4	79.12
566	1.8	3.9	0.9	4.2	1.4	69.77
565	0.9	1.6	0.9	2.2	0.3	55.83

NODE	Vxx	Vyy
Cent	1.9	5.9
503	1.3	1.1
504	1.3	13.0
566	3.1	13.0
565	3.1	1.1

LC		NODE	Fxx	Fyy	Fxy	Fmax	Fmin	ANGLE
RC ENV~1	Max	Cent	1.7	2.4	2.3	3.0	0.9	57.19
		503	2.0	1.8	2.3	2.8	0.7	37.40
		504	2.0	3.0	2.3	3.8	1.4	62.29
		566	1.4	3.0	2.3	3.9	0.9	60.97
		565	1.4	1.8	2.3	2.9	0.5	54.09
	Min	Cent	-5.6	-0.1	-1.9	-0.1	-5.7	-84.06
		503	-6.3	0.1	-1.9	0.2	-6.4	-85.01
		504	-6.3	-0.5	-1.9	-0.4	-6.4	-84.49
		566	-4.9	-0.5	-1.9	-0.4	-5.0	-82.59
		565	-4.9	0.1	-1.9	0.2	-5.0	-83.51

	NODE	Mxx	Myy	Mxy	Mmax	Mmin	ANGLE
Max	Cent	7.7	6.6	1.7	8.3	5.6	28.63
	503	2.1	5.2	0.7	5.2	2.0	86.70
	504	12.8	13.2	1.6	14.3	10.8	56.87
	566	11.6	7.4	2.6	12.5	5.3	19.10
	565	4.2	4.6	1.6	5.3	3.5	50.80
Min	Cent	-4.0	0.7	-0.3	1.4	-4.0	-87.78
	503	-5.7	-0.4	-0.6	-0.4	-5.7	86.46
	504	-2.9	1.5	-0.3	1.6	-2.9	-85.84
	566	-1.5	-0.4	-0.1	2.9	-1.5	87.27
	565	-5.7	-1.5	-0.5	-1.0	-5.7	60.87

	NODE	Vxx	Vyy
Max	Cent	-5.5	9.5
	503	-4.6	3.1
	504	-4.6	18.8
	566	-6.4	18.8
	565	-6.4	3.1
Min	Cent	-21.1	-2.4
	503	-22.4	0.2
	504	-22.4	-7.2
	566	-19.7	-7.2
	565	-19.7	0.2

LC		NODE	Fxx	Fyy	Fxy	Fmax	Fmin	ANGLE
RC ENV~2	Max	Cent	-0.5	1.8	0.6	1.8	-0.5	83.93
		503	-0.5	1.3	0.6	1.4	-0.5	83.99
		504	-0.5	2.2	0.6	2.3	-0.5	84.77
		566	-0.5	2.2	0.6	2.3	-0.5	83.87
		565	-0.5	1.3	0.6	1.4	-0.5	82.77
	Min	Cent	-3.9	0.4	-0.1	0.4	-4.0	-86.10
		503	-4.4	0.5	-0.1	0.5	-4.5	87.95
		504	-4.4	0.4	-0.1	0.4	-4.5	-85.60
		566	-3.4	0.4	-0.1	0.4	-3.5	-85.94
		565	-3.4	0.5	-0.1	0.5	-3.5	87.79

	NODE	Mxx	Myy	Mxy	Mmax	Mmin	ANGLE
Max	Cent	4.0	5.0	1.2	5.8	3.3	58.55
	503	-1.0	3.6	0.5	3.6	-1.0	85.49
	504	8.5	9.8	1.1	10.4	7.9	59.83
	566	8.4	3.9	1.8	9.0	3.4	19.61
	565	0.6	2.9	1.1	3.3	0.2	70.35
Min	Cent	0.1	1.1	0.4	1.6	-0.1	52.14
	503	-3.2	0.2	-0.0	0.2	-3.2	87.46
	504	2.5	3.6	0.4	3.8	2.4	68.32
	566	3.1	1.1	0.8	3.5	0.8	27.64

```
                                        565       -2.2       -0.5        0.4       -0.3       -2.3      67.53

                                       NODE        Vxx        Vyy
                                   ---- ------ ---------- ----------
                                    Max   Cent       -8.9        6.6
                                          503       -9.0        2.2
                                          504       -9.0       11.2
                                          566       -8.9       11.2
                                          565       -8.9        2.2
                                    Min   Cent      -15.4        2.5
                                          503      -16.3        1.2
                                          504      -16.3        3.6
                                          566      -14.4        3.6
                                          565      -14.4        1.2


  ELEM   MAT    SEC        LC        NODE        Fxx        Fyy        Fxy       Fmax       Fmin      ANGLE
------ ------ ------ -------- ---- ------ ---------- ---------- ---------- ---------- ---------- ----------
   522      1      1       SX (RS)   Cent        6.0        1.1        3.2        7.5       -0.5      26.29
                                     504       11.9        1.2        3.2       12.8        0.3      15.35
                                      10       11.9        1.4        3.2       12.8        0.6      15.66
                                     212        0.5        1.4        3.2        4.2       -2.2      49.13
                                     566        0.5        1.2        3.2        4.0       -2.4      47.97

                                       NODE        Mxx        Myy        Mxy       Mmax       Mmin      ANGLE
                                   ---- ------ ---------- ---------- ---------- ---------- ---------- ----------
                                          Cent       12.3        3.1        2.4       12.9        2.6      13.76
                                          504        7.8        4.9        1.8        8.7        4.1      26.01
                                           10       38.7        7.8        7.4       40.3        6.1      12.79
                                          212        4.2        1.1        7.9       10.6       -5.4      39.39
                                          566        7.1        0.7        1.4        7.4        0.4      11.42

                                       NODE        Vxx        Vyy
                                   ---- ------ ---------- ----------
                                          Cent       17.4        4.1
                                          504       54.4        8.2
                                           10       54.4        0.6
                                          212       19.6        0.6
                                          566       19.6        8.2


                                 LC        NODE        Fxx        Fyy        Fxy       Fmax       Fmin      ANGLE
                            -------- ---- ------ ---------- ---------- ---------- ---------- ---------- ----------
                                 SY (RS)   Cent        1.8        5.0        4.6        8.3       -1.4      54.54
                                           504        3.7        1.4        4.6        7.3       -2.2      38.11
                                            10        3.7       11.5        4.6       13.6        1.5      65.10
                                           212        0.6       11.5        4.6       13.2       -1.1      69.83
                                           566        0.6        1.4        4.6        5.6       -3.6      47.49

                                       NODE        Mxx        Myy        Mxy       Mmax       Mmin      ANGLE
                                   ---- ------ ---------- ---------- ---------- ---------- ---------- ----------
                                          Cent        2.9        7.7        2.1        8.4        2.1      69.49
                                          504        1.6        3.4        5.1        7.6       -2.6      50.03
                                           10        9.6       25.3        5.3       26.9        8.0      73.06
                                          212        3.6        5.4        2.5        7.1        1.9      54.91
                                          566        1.1        3.5        0.6        3.6        1.0      77.03

                                       NODE        Vxx        Vyy
                                   ---- ------ ---------- ----------
                                          Cent        5.0       12.4
                                          504       12.0       13.0
                                           10       12.0       37.6
                                          212        7.4       37.6
                                          566        7.4       13.0


                                 LC        NODE        Fxx        Fyy        Fxy       Fmax       Fmin      ANGLE
                            -------- ---- ------ ---------- ---------- ---------- ---------- ---------- ----------
                            RC ENV~1  Max   Cent        3.3        5.5        5.9        9.0       -0.2      59.15
                                          504        6.7        2.4        5.9        9.5        0.3      31.53
                                           10        6.7       11.5        5.9       13.8       -0.4      68.79
                                          212        0.4       11.5        5.9       14.0       -0.7      66.56
                                          566        0.4        2.4        5.9        7.4       -0.6      49.81
                                    Min   Cent       -9.1       -4.5       -3.3       -1.3      -11.0     -45.06
                                          504      -17.7       -0.5       -3.3       -0.0      -18.7     -83.78
                                           10      -17.7      -11.5       -3.3       -6.6      -18.9     -34.22
                                          212       -0.9      -11.5       -3.3       -0.2      -12.4     -54.68
                                          566       -0.9       -0.5       -3.3        0.5       -4.6     -76.71
```

	NODE	Mxx	Myy	Mxy	Mmax	Mmin	ANGLE
Max	Cent	26.5	14.4	2.6	26.5	13.1	0.91
	504	10.2	12.1	6.6	14.6	7.2	61.51
	10	79.7	42.0	4.7	81.2	38.9	-10.51
	212	9.8	5.9	5.5	12.6	5.9	26.78
	566	13.5	7.1	5.3	16.1	4.6	26.30
Min	Cent	-1.0	-0.9	-2.2	4.4	-1.9	-68.29
	504	-5.3	1.0	-3.5	1.1	-5.3	-87.45
	10	-7.2	-8.6	-10.1	13.8	-12.0	-64.33
	212	1.4	-4.8	-10.2	4.5	-9.8	-27.22
	566	-1.3	0.1	0.5	3.0	-1.4	82.99

	NODE	Vxx	Vyy
Max	Cent	-7.1	31.8
	504	6.1	18.8
	10	6.1	58.7
	212	18.8	58.7
	566	18.8	18.8
Min	Cent	-56.3	1.1
	504	-122.7	-7.2
	10	-122.7	-16.6
	212	-20.4	-16.6
	566	-20.4	-7.2

LC		NODE	Fxx	Fyy	Fxy	Fmax	Fmin	ANGLE
RC ENV~2	Max	Cent	-0.3	0.6	3.3	1.9	-0.3	68.18
		504	-0.2	1.7	3.3	2.4	-0.2	77.61
		10	-0.2	0.0	3.3	0.4	-0.3	76.30
		212	-0.1	0.0	3.3	2.9	-0.4	43.91
		566	-0.1	1.7	3.3	4.1	-0.4	53.80
	Min	Cent	-6.4	0.0	0.0	0.1	-7.7	87.76
		504	-12.5	0.4	0.0	0.4	-13.2	88.58
		10	-12.5	-0.6	0.0	-0.3	-13.3	73.53
		212	-0.5	-0.6	0.0	-0.2	-3.7	84.67
		566	-0.5	0.4	0.0	0.4	-2.8	88.83

	NODE	Mxx	Myy	Mxy	Mmax	Mmin	ANGLE
Max	Cent	19.1	9.7	1.2	19.1	9.7	0.87
	504	4.8	9.0	3.2	10.7	3.3	62.49
	10	57.2	27.0	-0.4	58.3	25.9	-10.53
	212	6.8	0.6	0.2	7.9	-0.0	-29.53
	566	9.8	4.2	3.7	11.6	2.8	26.75
Min	Cent	7.8	4.4	-0.1	8.1	4.0	17.22
	504	0.1	3.0	1.2	3.5	-0.4	70.08
	10	20.6	13.4	-5.8	20.6	13.4	-2.81
	212	4.9	-2.3	-5.3	6.4	-4.4	-17.94
	566	3.7	1.3	1.8	4.8	0.2	32.00

	NODE	Vxx	Vyy
Max	Cent	-19.7	22.8
	504	-33.0	11.2
	10	-33.0	34.5
	212	6.6	34.5
	566	6.6	11.2
Min	Cent	-40.7	12.8
	504	-88.0	3.6
	10	-88.0	20.6
	212	-6.5	20.6
	566	-6.5	3.6

ELEM	MAT	SEC	LC		NODE	Fxx	Fyy	Fxy	Fmax	Fmin	ANGLE
523	1	1	SX (RS)		Cent	0.3	0.3	1.0	1.3	-0.7	45.66
					512	1.0	0.1	1.0	1.6	-0.5	32.05
					560	1.0	0.7	1.0	1.9	-0.1	41.09
					567	0.5	0.7	1.0	1.6	-0.4	48.35
					520	0.5	0.1	1.0	1.3	-0.7	38.50

	NODE	Mxx	Myy	Mxy	Mmax	Mmin	ANGLE
	Cent	0.4	0.2	1.0	1.2	-0.7	41.40
	512	9.1	1.8	0.2	9.1	1.8	1.75

		560	6.3	3.1	1.4	6.9	2.6	20.62
		567	1.9	1.3	1.4	3.1	0.1	39.45
		520	2.0	0.4	0.2	2.0	0.4	5.82

	NODE	Vxx	Vyy
	Cent	13.0	3.4
	512	25.8	0.0
	560	25.8	6.8
	567	1.1	6.8
	520	1.1	0.0

LC		NODE	Fxx	Fyy	Fxy	Fmax	Fmin	ANGLE
SY (RS)		Cent	0.9	3.3	1.4	3.9	0.3	65.52
		512	1.5	4.5	1.4	5.0	1.0	68.83
		560	1.5	2.1	1.4	3.2	0.4	50.99
		567	0.3	2.1	1.4	2.8	-0.4	61.38
		520	0.3	4.5	1.4	4.9	-0.1	73.40

	NODE	Mxx	Myy	Mxy	Mmax	Mmin	ANGLE
	Cent	2.3	4.9	0.7	5.1	2.1	74.91
	512	6.3	8.7	0.5	8.8	6.2	77.65
	560	0.7	5.5	0.6	5.6	0.6	83.38
	567	1.7	3.4	0.6	3.6	1.5	71.81
	520	2.0	2.0	0.6	2.6	1.4	43.65

	NODE	Vxx	Vyy
	Cent	6.3	8.1
	512	11.4	11.3
	560	11.4	5.0
	567	1.1	5.0
	520	1.1	11.3

LC		NODE	Fxx	Fyy	Fxy	Fmax	Fmin	ANGLE
RC ENV~1	Max	Cent	-0.0	4.0	1.3	4.4	-0.4	73.55
		512	0.6	5.2	1.3	5.6	0.2	75.14
		560	0.6	2.9	1.3	3.5	-0.0	65.45
		567	-0.5	2.9	1.3	3.3	-0.8	71.62
		520	-0.5	5.2	1.3	5.5	-0.8	77.89
	Min	Cent	-2.7	-2.5	-1.4	-0.7	-3.6	-38.43
		512	-2.5	-3.7	-1.4	-1.5	-4.6	-32.19
		560	-2.5	-1.2	-1.4	-0.3	-3.3	-56.03
		567	-2.9	-1.2	-1.4	0.1	-2.9	-45.38
		520	-2.9	-3.7	-1.4	-0.7	-4.4	-24.46

	NODE	Mxx	Myy	Mxy	Mmax	Mmin	ANGLE
Max	Cent	6.5	6.1	-0.8	8.8	2.9	-29.35
	512	13.2	11.9	-1.0	14.8	9.5	-23.07
	560	7.1	9.0	-0.9	12.1	5.9	-45.07
	567	3.0	2.9	-0.5	5.4	0.5	-29.15
	520	5.0	0.5	-0.5	5.8	0.3	-16.17
Min	Cent	-1.5	-3.7	-4.7	0.1	-5.3	-32.73
	512	-5.5	-5.5	-4.1	-1.6	-6.6	-28.09
	560	-5.6	-2.1	-5.6	2.0	-7.3	-34.47
	567	-2.7	-4.5	-5.1	-0.6	-7.5	-37.42
	520	-2.1	-5.6	-3.5	-0.9	-7.1	-33.95

	NODE	Vxx	Vyy
Max	Cent	16.5	16.6
	512	30.9	18.9
	560	30.9	16.4
	567	4.2	16.4
	520	4.2	18.9
Min	Cent	-9.6	-0.9
	512	-20.7	-3.6
	560	-20.7	0.1
	567	0.6	0.1
	520	0.6	-3.6

LC	NODE	Fxx	Fyy	Fxy	Fmax	Fmin	ANGLE

RC ENV~2	Max	Cent	-0.7	1.3	0.1	1.3	-0.7	-87.63
		512	-0.8	1.3	0.1	1.3	-0.8	-87.53
		560	-0.8	1.4	0.1	1.4	-0.8	89.90
		567	-0.6	1.4	0.1	1.4	-0.6	89.90
		520	-0.6	1.3	0.1	1.3	-0.7	-87.73
	Min	Cent	-1.9	0.7	-0.2	0.7	-1.9	89.39
		512	-1.8	0.6	-0.2	0.6	-1.8	87.24
		560	-1.8	0.7	-0.2	0.7	-1.8	-85.83
		567	-2.0	0.7	-0.2	0.7	-2.1	-86.32
		520	-2.0	0.6	-0.2	0.6	-2.1	86.86

	NODE	Mxx	Myy	Mxy	Mmax	Mmin	ANGLE
Max	Cent	4.4	1.4	-1.7	6.1	-0.3	-30.78
	512	9.3	4.6	-1.5	10.4	3.5	-24.09
	560	4.8	5.2	-2.2	8.6	1.4	-46.95
	567	1.9	-0.3	-1.9	3.7	-2.3	-34.38
	520	3.3	-1.5	-1.1	3.9	-2.0	-16.63
Min	Cent	0.8	-0.9	-3.3	2.8	-3.1	-47.51
	512	2.9	1.6	-2.9	4.7	-0.2	-40.73
	560	-0.3	1.2	-4.0	4.1	-2.8	-53.63
	567	-1.0	-3.0	-3.6	1.2	-5.1	-46.49
	520	-0.4	-3.8	-2.4	0.5	-4.8	-29.52

	NODE	Vxx	Vyy
Max	Cent	6.7	12.0
	512	10.9	12.2
	560	10.9	11.8
	567	3.0	11.8
	520	3.0	12.2
Min	Cent	1.8	7.0
	512	1.5	7.6
	560	1.5	6.1
	567	1.6	6.1
	520	1.6	7.6

ELEM	MAT	SEC	LC		NODE	Fxx	Fyy	Fxy	Fmax	Fmin	ANGLE
524	1	1	SX (RS)		Cent	1.4	0.5	1.4	2.4	-0.5	36.22
					560	2.4	1.1	1.4	3.2	0.2	32.11
					561	2.4	0.1	1.4	3.0	-0.5	25.37
					568	0.6	0.1	1.4	1.7	-1.0	40.52
					567	0.6	1.1	1.4	2.2	-0.6	50.00

	NODE	Mxx	Myy	Mxy	Mmax	Mmin	ANGLE
	Cent	3.4	0.8	0.3	3.4	0.7	7.13
	560	5.6	3.0	0.2	5.6	3.0	3.34
	561	3.0	1.1	0.5	3.1	1.0	13.96
	568	3.0	0.4	0.5	3.1	0.3	11.36
	567	2.2	1.3	0.1	2.2	1.3	6.48

	NODE	Vxx	Vyy
	Cent	2.2	4.4
	560	4.5	6.8
	561	4.5	1.9
	568	1.3	1.9
	567	1.3	6.8

LC		NODE	Fxx	Fyy	Fxy	Fmax	Fmin	ANGLE
SY (RS)		Cent	0.5	1.1	2.2	3.0	-1.4	49.11
		560	1.1	2.3	2.2	4.0	-0.5	52.78
		561	1.1	0.2	2.2	2.9	-1.6	39.11
		568	0.2	0.2	2.2	2.4	-2.0	45.36
		567	0.2	2.3	2.2	3.7	-1.2	58.28

	NODE	Mxx	Myy	Mxy	Mmax	Mmin	ANGLE
	Cent	0.6	3.6	0.3	3.7	0.6	84.47
	560	2.9	6.3	0.1	6.3	2.9	87.53
	561	1.3	2.5	0.1	2.5	1.2	83.99
	568	0.2	2.6	0.6	2.7	0.1	77.11
	567	1.2	3.3	0.5	3.4	1.0	76.71

	NODE	Vxx	Vyy
	Cent	4.1	2.6
	560	6.0	5.0
	561	6.0	0.3
	568	2.2	0.3
	567	2.2	5.0

LC		NODE	Fxx	Fyy	Fxy	Fmax	Fmin	ANGLE
RC ENV~1	Max	Cent	0.4	2.0	2.1	3.2	-0.5	60.01
		560	1.4	3.1	2.1	4.2	0.3	62.64
		561	1.4	1.9	2.1	2.8	-0.1	51.26
		568	-0.4	1.9	2.1	2.5	-1.1	57.12
		567	-0.4	3.1	2.1	4.1	-1.0	66.55
	Min	Cent	-2.9	-0.3	-2.2	0.9	-3.2	-66.60
		560	-3.4	-1.5	-2.2	0.3	-4.1	-68.69
		561	-3.4	0.7	-2.2	1.0	-3.8	88.11
		568	-2.8	0.7	-2.2	1.0	-2.8	88.34
		567	-2.8	-1.5	-2.2	0.7	-3.6	-57.26

	NODE	Mxx	Myy	Mxy	Mmax	Mmin	ANGLE
Max	Cent	1.3	4.8	-1.9	6.0	-0.3	-49.09
	560	5.6	9.5	-2.2	11.2	3.7	-49.07
	561	-1.2	4.1	-1.6	4.7	-1.7	-64.20
	568	0.0	2.9	-1.4	3.4	-1.1	-50.00
	567	2.3	2.7	-1.7	5.5	-0.8	-32.63
Min	Cent	-5.5	-2.5	-5.2	-0.1	-7.1	-46.61
	560	-5.7	-3.0	-5.4	-0.5	-6.6	-44.54
	561	-7.2	-1.6	-4.8	0.1	-8.6	-68.19
	568	-5.9	-3.4	-4.8	-0.1	-7.9	-50.64
	567	-3.3	-4.6	-5.3	-0.2	-7.7	-37.37

	NODE	Vxx	Vyy
Max	Cent	12.5	11.5
	560	16.7	16.4
	561	16.7	6.6
	568	8.4	6.6
	567	8.4	16.4
Min	Cent	1.1	0.5
	560	0.8	0.1
	561	0.8	0.9
	568	1.3	0.9
	567	1.3	0.1

LC		NODE	Fxx	Fyy	Fxy	Fmax	Fmin	ANGLE
RC ENV~2	Max	Cent	-0.7	1.4	0.1	1.4	-0.7	89.71
		560	-0.6	1.4	0.1	1.4	-0.6	89.70
		561	-0.6	1.4	0.1	1.4	-0.6	-86.64
		568	-0.9	1.4	0.1	1.4	-0.9	-86.47
		567	-0.9	1.4	0.1	1.4	-0.9	89.72
	Min	Cent	-2.1	0.7	-0.3	0.8	-2.1	-84.45
		560	-2.1	0.7	-0.3	0.7	-2.2	-84.53
		561	-2.1	0.8	-0.3	0.8	-2.2	88.69
		568	-2.0	0.8	-0.3	0.8	-2.0	88.83
		567	-2.0	0.7	-0.3	0.7	-2.0	-83.95

	NODE	Mxx	Myy	Mxy	Mmax	Mmin	ANGLE
Max	Cent	-0.2	1.5	-2.2	4.3	-3.0	-51.03
	560	3.4	5.0	-2.3	8.0	0.4	-50.90
	561	-3.9	2.0	-2.1	3.5	-4.8	-65.56
	568	-1.7	0.6	-2.0	2.5	-3.7	-52.19
	567	1.3	-0.4	-2.2	3.8	-3.0	-34.12
Min	Cent	-2.5	-1.1	-3.7	1.6	-5.0	-56.30
	560	-0.9	1.1	-3.8	3.6	-3.1	-56.45
	561	-4.6	-0.7	-3.4	0.9	-6.3	-61.44
	568	-3.2	-2.1	-3.4	0.5	-5.6	-49.69
	567	-1.4	-3.0	-3.8	1.4	-5.4	-43.68

	NODE	Vxx	Vyy
Max	Cent	9.0	8.3

			560	12.0	11.8		
			561	12.0	4.7		
			568	6.0	4.7		
			567	6.0	11.8		
		Min	Cent	4.8	4.4		
			560	6.2	6.1		
			561	6.2	2.8		
			568	3.4	2.8		
			567	3.4	6.1		

ELEM	MAT	SEC	LC		NODE	Fxx	Fyy	Fxy	Fmax	Fmin	ANGLE
525	1	1	SX	(RS)	Cent	1.5	0.2	0.7	1.8	-0.2	23.96
					561	1.8	0.1	0.7	2.1	-0.2	20.46
					562	1.8	0.3	0.7	2.1	-0.0	21.88
					569	1.2	0.3	0.7	1.6	-0.1	28.42
					568	1.2	0.1	0.7	1.6	-0.3	26.33

		NODE	Mxx	Myy	Mxy	Mmax	Mmin	ANGLE
		Cent	2.5	0.7	0.5	2.6	0.6	15.42
		561	2.9	1.1	0.6	3.1	0.9	17.24
		562	2.2	1.0	0.5	2.4	0.8	19.39
		569	2.5	0.7	0.4	2.6	0.6	11.89
		568	2.7	0.4	0.5	2.8	0.3	12.19

		NODE	Vxx	Vyy
		Cent	2.5	1.5
		561	2.9	1.9
		562	2.9	1.0
		569	2.0	1.0
		568	2.0	1.9

LC		NODE	Fxx	Fyy	Fxy	Fmax	Fmin	ANGLE
SY	(RS)	Cent	0.2	0.2	1.6	1.8	-1.4	44.61
		561	0.2	0.2	1.6	1.8	-1.4	45.62
		562	0.2	0.2	1.6	1.8	-1.4	45.47
		569	0.3	0.2	1.6	1.9	-1.3	43.95
		568	0.3	0.2	1.6	1.9	-1.3	44.09

		NODE	Mxx	Myy	Mxy	Mmax	Mmin	ANGLE
		Cent	0.3	2.1	0.1	2.1	0.3	85.54
		561	0.4	2.6	0.2	2.7	0.3	84.19
		562	0.6	1.8	0.4	1.9	0.5	74.00
		569	0.6	1.5	0.1	1.5	0.6	84.85
		568	0.3	2.7	0.2	2.7	0.3	86.19

		NODE	Vxx	Vyy
		Cent	0.6	0.5
		561	0.1	0.3
		562	0.1	0.6
		569	1.1	0.6
		568	1.1	0.3

LC		NODE	Fxx	Fyy	Fxy	Fmax	Fmin	ANGLE
RC ENV~1	Max	Cent	0.5	1.9	1.6	1.9	0.0	60.14
		561	0.8	2.0	1.6	2.0	0.2	60.84
		562	0.8	1.9	1.6	1.9	0.2	60.61
		569	0.2	1.9	1.6	2.0	-0.2	59.69
		568	0.2	2.0	1.6	2.0	-0.2	59.92
	Min	Cent	-2.8	0.7	-1.6	0.9	-2.8	-77.04
		561	-2.8	0.6	-1.6	0.9	-3.0	-78.21
		562	-2.8	0.6	-1.6	0.8	-3.0	-77.65
		569	-2.8	0.6	-1.6	0.8	-2.8	-75.63
		568	-2.8	0.6	-1.6	0.9	-2.8	89.39

		NODE	Mxx	Myy	Mxy	Mmax	Mmin	ANGLE
	Max	Cent	-1.7	2.9	-0.9	3.1	-2.0	-79.31
		561	-0.8	4.4	-1.0	4.6	-1.0	-80.49
		562	-3.1	2.5	-0.7	2.6	-3.2	-83.36

		569	-2.0	1.6	-0.9	1.9	-2.3	-77.85
		568	-0.6	3.0	-1.2	3.3	-1.3	-76.72
	Min	Cent	-6.7	-3.0	-3.5	-0.9	-7.7	-56.82
		561	-6.5	-1.4	-3.7	-0.1	-7.1	-65.45
		562	-8.3	-3.1	-2.9	-1.8	-9.3	-64.76
		569	-7.1	-4.1	-3.2	-1.9	-8.3	-54.29
		568	-6.0	-3.5	-4.0	-1.0	-7.4	-54.47

		NODE	Vxx	Vyy
	Max	Cent	6.7	4.9
		561	7.3	6.6
		562	7.3	3.2
		569	6.1	3.2
		568	6.1	6.6
	Min	Cent	-0.1	0.7
		561	-0.3	0.9
		562	-0.3	0.4
		569	0.1	0.4
		568	0.1	0.9

LC		NODE	Fxx	Fyy	Fxy	Fmax	Fmin	ANGLE
RC ENV~2	Max	Cent	-0.9	1.4	0.1	1.4	-0.9	-88.06
		561	-0.8	1.4	0.1	1.4	-0.8	-88.08
		562	-0.8	1.4	0.1	1.4	-0.8	89.92
		569	-0.9	1.4	0.1	1.4	-1.0	89.93
		568	-0.9	1.4	0.1	1.4	-1.0	-88.09
	Min	Cent	-2.0	0.8	-0.1	0.8	-2.0	89.61
		561	-2.0	0.7	-0.1	0.7	-2.0	89.60
		562	-2.0	0.7	-0.1	0.7	-2.0	-86.74
		569	-2.0	0.7	-0.1	0.7	-2.0	-86.72
		568	-2.0	0.7	-0.1	0.7	-2.0	89.61

		NODE	Mxx	Myy	Mxy	Mmax	Mmin	ANGLE
	Max	Cent	-4.0	1.0	-1.4	1.4	-4.6	-67.16
		561	-2.9	2.2	-1.5	3.2	-3.9	-67.99
		562	-5.3	1.0	-1.2	1.2	-5.5	-79.12
		569	-4.5	0.3	-1.3	0.7	-4.9	-75.36
		568	-2.3	0.5	-1.6	1.6	-3.8	-55.83
	Min	Cent	-4.3	-1.7	-2.5	-0.5	-5.6	-60.23
		561	-4.0	-0.6	-2.6	0.6	-5.1	-62.69
		562	-6.2	-1.8	-2.0	-1.0	-6.8	-67.78
		569	-4.8	-2.5	-2.3	-1.2	-6.0	-58.23
		568	-3.5	-2.1	-2.8	-0.1	-5.3	-51.63

		NODE	Vxx	Vyy
	Max	Cent	4.8	3.5
		561	5.2	4.7
		562	5.2	2.3
		569	4.3	2.3
		568	4.3	4.7
	Min	Cent	1.9	2.1
		561	2.1	2.8
		562	2.1	1.4
		569	1.7	1.4
		568	1.7	2.8

ELEM	MAT	SEC	LC		NODE	Fxx	Fyy	Fxy	Fmax	Fmin	ANGLE
526	1	1	SX (RS)		Cent	1.6	0.3	0.5	1.7	0.1	18.06
					562	1.7	0.2	0.5	1.8	0.1	16.11
					563	1.7	0.3	0.5	1.8	0.2	17.36
					570	1.4	0.3	0.5	1.6	0.2	20.45
					569	1.4	0.2	0.5	1.6	0.0	18.81

		NODE	Mxx	Myy	Mxy	Mmax	Mmin	ANGLE
		Cent	2.5	0.8	0.2	2.5	0.8	8.05
		562	2.2	1.0	0.3	2.3	0.9	10.97
		563	2.7	1.0	0.1	2.7	0.9	4.94
		570	2.8	0.8	0.2	2.8	0.8	6.06
		569	2.4	0.7	0.3	2.5	0.6	9.96

		NODE	Vxx	Vyy

Cent	2.1	0.7	
562	2.2	1.0	
563	2.2	0.4	
570	2.0	0.4	
569	2.0	1.0	

LC		NODE	Fxx	Fyy	Fxy	Fmax	Fmin	ANGLE
SY (RS)		Cent	0.2	0.2	1.7	1.9	-1.5	44.74
		562	0.3	0.2	1.7	1.9	-1.5	44.33
		563	0.3	0.2	1.7	1.9	-1.4	44.43
		570	0.2	0.2	1.7	1.9	-1.5	45.03
		569	0.2	0.2	1.7	1.9	-1.5	44.94

	NODE	Mxx	Myy	Mxy	Mmax	Mmin	ANGLE
	Cent	0.3	1.5	0.2	1.5	0.3	80.69
	562	0.1	1.9	0.3	1.9	0.1	80.81
	563	0.4	1.4	0.3	1.5	0.4	73.92
	570	0.4	1.1	0.1	1.1	0.4	79.98
	569	0.2	1.5	0.1	1.6	0.2	85.35

	NODE	Vxx	Vyy
	Cent	0.3	0.6
	562	0.4	0.6
	563	0.4	0.5
	570	0.2	0.5
	569	0.2	0.6

LC		NODE	Fxx	Fyy	Fxy	Fmax	Fmin	ANGLE
RC ENV~1	Max	Cent	0.5	1.8	1.7	2.0	0.3	59.51
		562	0.6	1.8	1.7	2.0	0.3	59.26
		563	0.6	1.8	1.7	2.0	0.4	59.24
		570	0.4	1.8	1.7	2.0	0.2	59.66
		569	0.4	1.8	1.7	2.0	0.2	59.68
	Min	Cent	-2.8	0.6	-1.7	0.6	-2.8	-81.53
		562	-2.8	0.6	-1.7	0.7	-2.8	-82.03
		563	-2.8	0.5	-1.7	0.6	-2.8	-81.69
		570	-2.8	0.5	-1.7	0.6	-2.8	-80.96
		569	-2.8	0.6	-1.7	0.7	-2.8	-81.36

	NODE	Mxx	Myy	Mxy	Mmax	Mmin	ANGLE
Max	Cent	-2.4	1.9	-0.6	2.0	-2.5	-84.16
	562	-2.8	2.7	-0.7	2.7	-2.9	-84.97
	563	-2.5	2.0	-0.4	2.0	-2.5	-86.49
	570	-1.8	1.2	-0.5	1.3	-1.9	-83.43
	569	-2.2	1.7	-0.7	1.8	-2.3	-81.75
Min	Cent	-7.5	-3.8	-2.0	-2.8	-8.0	-64.20
	562	-7.4	-3.0	-2.2	-2.1	-8.1	-66.55
	563	-8.8	-3.7	-1.6	-3.2	-9.0	-71.35
	570	-7.4	-4.4	-1.7	-3.5	-7.8	-60.96
	569	-7.0	-4.0	-2.4	-2.5	-7.5	-56.49

	NODE	Vxx	Vyy
Max	Cent	2.1	2.7
	562	2.3	3.2
	563	2.3	2.2
	570	2.0	2.2
	569	2.0	3.2
Min	Cent	-2.0	0.6
	562	-2.1	0.4
	563	-2.1	0.5
	570	-2.0	0.5
	569	-2.0	0.4

LC		NODE	Fxx	Fyy	Fxy	Fmax	Fmin	ANGLE
RC ENV~2	Max	Cent	-1.0	1.3	0.1	1.3	-1.0	89.35
		562	-1.0	1.3	0.1	1.3	-1.0	-88.91
		563	-1.0	1.3	0.1	1.3	-1.0	89.35
		570	-1.0	1.3	0.1	1.3	-1.0	89.35

569	-1.0	1.3	0.1	1.3	-1.0	-88.91
Min Cent	-2.0	0.7	-0.1	0.7	-2.0	-87.61
562	-2.0	0.7	-0.1	0.7	-2.0	89.19
563	-2.0	0.7	-0.1	0.7	-2.0	-87.56
570	-2.0	0.7	-0.1	0.7	-2.0	-87.56
569	-2.0	0.7	-0.1	0.7	-2.0	89.19

NODE	Mxx	Myy	Mxy	Mmax	Mmin	ANGLE
Max Cent	-4.7	0.6	-0.9	0.7	-4.9	-81.22
562	-5.0	1.0	-1.0	1.2	-5.2	-81.12
563	-4.9	0.8	-0.7	0.8	-5.0	-83.42
570	-4.2	0.3	-0.7	0.4	-4.5	-81.52
569	-4.5	0.3	-1.0	0.5	-4.8	-78.71
Min Cent	-5.6	-2.3	-1.4	-1.8	-5.9	-68.16
562	-5.6	-1.7	-1.6	-1.2	-6.0	-69.84
563	-6.5	-2.2	-1.1	-1.9	-6.6	-74.22
570	-5.5	-2.8	-1.2	-2.2	-5.8	-66.04
569	-4.8	-2.5	-1.7	-1.6	-5.6	-61.26

NODE	Vxx	Vyy
Max Cent	1.3	1.9
562	1.3	2.3
563	1.3	1.6
570	1.2	1.6
569	1.2	2.3
Min Cent	-0.5	1.2
562	-0.5	1.4
563	-0.5	1.0
570	-0.6	1.0
569	-0.6	1.4

ELEM	MAT	SEC	LC	NODE	Fxx	Fyy	Fxy	Fmax	Fmin	ANGLE
527	1	1	SX (RS)	Cent	1.7	0.4	0.4	1.8	0.3	15.78
				563	1.9	0.3	0.4	1.9	0.2	13.68
				564	1.9	0.5	0.4	2.0	0.4	15.25
				571	1.6	0.5	0.4	1.7	0.3	18.52
				570	1.6	0.3	0.4	1.7	0.2	16.33

NODE	Mxx	Myy	Mxy	Mmax	Mmin	ANGLE
Cent	3.1	1.0	0.2	3.1	1.0	5.18
563	2.6	0.9	0.1	2.6	0.9	4.65
564	3.5	1.3	0.2	3.6	1.3	5.48
571	3.6	1.0	0.2	3.6	0.9	5.22
570	2.8	0.8	0.2	2.8	0.8	5.26

NODE	Vxx	Vyy
Cent	2.0	0.5
563	2.0	0.4
564	2.0	0.7
571	1.9	0.7
570	1.9	0.4

LC	NODE	Fxx	Fyy	Fxy	Fmax	Fmin	ANGLE
SY (RS)	Cent	0.4	0.1	1.8	2.1	-1.6	43.07
	563	0.5	0.2	1.8	2.2	-1.5	42.65
	564	0.5	0.1	1.8	2.1	-1.5	42.19
	571	0.3	0.1	1.8	2.0	-1.6	43.51
	570	0.3	0.2	1.8	2.1	-1.6	43.97

NODE	Mxx	Myy	Mxy	Mmax	Mmin	ANGLE
Cent	0.3	1.3	0.3	1.3	0.2	76.37
563	0.2	1.4	0.3	1.5	0.2	76.90
564	0.4	1.5	0.3	1.5	0.3	73.92
571	0.4	1.2	0.2	1.2	0.3	75.73
570	0.2	1.1	0.2	1.2	0.2	78.83

NODE	Vxx	Vyy
Cent	0.2	0.5
563	0.3	0.5

		564	0.3	0.5				
		571	0.2	0.5				
		570	0.2	0.5				

LC		NODE	Fxx	Fyy	Fxy	Fmax	Fmin	ANGLE
RC ENV~1	Max	Cent	0.6	1.7	1.9	2.2	0.4	56.82
		563	0.7	1.7	1.9	2.2	0.4	56.89
		564	0.7	1.6	1.9	2.1	0.5	56.23
		571	0.5	1.6	1.9	2.1	0.3	56.77
		570	0.5	1.7	1.9	2.2	0.3	57.41
	Min	Cent	-3.1	0.4	-1.8	0.5	-3.1	-83.71
		563	-3.3	0.5	-1.8	0.6	-3.3	-84.25
		564	-3.3	0.3	-1.8	0.3	-3.3	-83.85
		571	-2.9	0.3	-1.8	0.3	-2.9	-83.06
		570	-2.9	0.5	-1.8	0.6	-2.9	-83.56

		NODE	Mxx	Myy	Mxy	Mmax	Mmin	ANGLE
	Max	Cent	-1.0	1.8	-0.1	1.8	-1.0	-88.96
		563	-2.5	2.0	-0.2	2.0	-2.5	-88.39
		564	-0.1	2.4	0.1	2.4	-0.1	89.04
		571	0.3	1.5	0.0	1.5	0.3	-89.79
		570	-1.7	1.3	-0.3	1.3	-1.8	-86.94
	Min	Cent	-7.2	-4.0	-0.8	-3.7	-7.3	-72.64
		563	-8.5	-3.7	-1.1	-3.4	-8.5	-75.77
		564	-7.2	-3.4	-0.6	-3.3	-7.2	-79.47
		571	-6.8	-4.4	-0.6	-4.1	-6.9	-61.50
		570	-7.4	-4.4	-1.1	-3.9	-7.5	-66.25

		NODE	Vxx	Vyy
	Max	Cent	-0.4	2.7
		563	-0.4	2.2
		564	-0.4	3.2
		571	-0.4	3.2
		570	-0.4	2.2
	Min	Cent	-4.3	0.7
		563	-4.5	0.5
		564	-4.5	0.7
		571	-4.2	0.7
		570	-4.2	0.5

LC		NODE	Fxx	Fyy	Fxy	Fmax	Fmin	ANGLE
RC ENV~2	Max	Cent	-0.8	1.2	0.2	1.2	-0.9	87.18
		563	-0.8	1.3	0.2	1.3	-0.8	87.29
		564	-0.8	1.2	0.2	1.2	-0.8	87.24
		571	-0.9	1.2	0.2	1.2	-0.9	87.05
		570	-0.9	1.3	0.2	1.3	-0.9	87.11
	Min	Cent	-2.2	0.6	-0.1	0.6	-2.2	-88.71
		563	-2.3	0.7	-0.1	0.7	-2.3	-88.77
		564	-2.3	0.6	-0.1	0.6	-2.3	-88.67
		571	-2.1	0.6	-0.1	0.6	-2.1	-88.65
		570	-2.1	0.7	-0.1	0.7	-2.1	-88.75

		NODE	Mxx	Myy	Mxy	Mmax	Mmin	ANGLE
	Max	Cent	-3.6	0.7	-0.3	0.7	-3.7	-86.35
		563	-4.9	0.8	-0.4	0.8	-4.9	-85.67
		564	-3.0	1.2	-0.0	1.2	-3.0	-87.90
		571	-2.4	0.5	-0.0	0.5	-2.5	-87.25
		570	-4.1	0.3	-0.4	0.3	-4.2	-84.78
	Min	Cent	-5.2	-2.4	-0.6	-2.3	-5.3	-76.79
		563	-6.3	-2.2	-0.8	-2.1	-6.4	-78.30
		564	-5.0	-2.0	-0.4	-2.0	-5.1	-81.90
		571	-4.4	-2.7	-0.4	-2.6	-4.4	-72.12
		570	-5.4	-2.8	-0.8	-2.5	-5.5	-71.76

		NODE	Vxx	Vyy
	Max	Cent	-1.7	1.9
		563	-1.7	1.6
		564	-1.7	2.3
		571	-1.6	2.3
		570	-1.6	1.6
	Min	Cent	-3.2	1.2

					563	-3.3	1.0				
					564	-3.3	1.3				
					571	-3.1	1.3				
					570	-3.1	1.0				

ELEM	MAT	SEC	LC		NODE	Fxx	Fyy	Fxy	Fmax	Fmin	ANGLE
528	1	1	SX	(RS)	Cent	1.9	0.6	0.6	2.2	0.3	21.17
					564	2.3	0.4	0.6	2.5	0.2	16.96
					565	2.3	0.7	0.6	2.5	0.5	19.23
					572	1.6	0.7	0.6	1.9	0.4	27.23
					571	1.6	0.4	0.6	1.9	0.2	23.36

		NODE	Mxx	Myy	Mxy	Mmax	Mmin	ANGLE
		Cent	4.1	1.2	0.4	4.1	1.1	7.72
		564	3.4	1.3	0.4	3.5	1.2	10.25
		565	4.7	1.6	0.5	4.8	1.5	8.44
		572	4.5	0.8	0.4	4.6	0.8	5.94
		571	3.7	1.0	0.3	3.7	1.0	6.32

		NODE	Vxx	Vyy
		Cent	2.1	1.1
		564	2.4	0.7
		565	2.4	1.4
		572	1.7	1.4
		571	1.7	0.7

LC		NODE	Fxx	Fyy	Fxy	Fmax	Fmin	ANGLE
SY	(RS)	Cent	0.6	0.1	2.0	2.4	-1.7	41.89
		564	0.7	0.1	2.0	2.5	-1.7	40.73
		565	0.7	0.2	2.0	2.5	-1.6	41.66
		572	0.5	0.2	2.0	2.4	-1.7	43.00
		571	0.5	0.1	2.0	2.3	-1.8	42.05

	NODE	Mxx	Myy	Mxy	Mmax	Mmin	ANGLE
	Cent	0.4	1.5	0.3	1.6	0.3	75.06
	564	0.4	1.4	0.3	1.5	0.3	73.31
	565	0.6	1.8	0.4	1.9	0.5	74.57
	572	0.4	1.7	0.3	1.8	0.3	76.32
	571	0.4	1.1	0.3	1.2	0.3	71.19

	NODE	Vxx	Vyy
	Cent	0.4	0.4
	564	0.4	0.5
	565	0.4	0.3
	572	0.6	0.3
	571	0.6	0.5

LC		NODE	Fxx	Fyy	Fxy	Fmax	Fmin	ANGLE
RC ENV~1	Max	Cent	0.8	1.6	2.2	2.5	0.2	54.15
		564	1.0	1.6	2.2	2.5	0.3	54.00
		565	1.0	1.6	2.2	2.5	0.4	54.73
		572	0.6	1.6	2.2	2.6	0.1	54.23
		571	0.6	1.6	2.2	2.5	0.0	53.49
	Min	Cent	-3.5	0.2	-1.9	0.2	-3.5	-82.53
		564	-4.0	0.3	-1.9	0.4	-4.0	-83.68
		565	-4.0	0.0	-1.9	0.1	-4.0	-83.19
		572	-3.0	0.0	-1.9	0.1	-3.1	-80.89
		571	-3.0	0.3	-1.9	0.4	-3.1	-81.74

	NODE	Mxx	Myy	Mxy	Mmax	Mmin	ANGLE
Max	Cent	2.1	2.4	1.1	2.7	1.5	44.56
	564	-0.4	2.3	0.7	2.3	-0.5	86.06
	565	4.1	3.6	1.4	4.7	2.9	33.63
	572	4.1	2.2	1.4	4.3	1.2	13.95
	571	0.6	1.5	0.7	1.5	0.4	85.50
Min	Cent	-6.1	-3.5	-0.2	-3.3	-6.1	55.21
	564	-7.2	-3.5	-0.3	-3.5	-7.2	89.65
	565	-5.4	-2.2	-0.1	-1.7	-5.4	46.86

572	-4.9	-4.0	-0.1	-2.0	-4.9	45.12
571	-6.8	-4.3	-0.3	-4.3	-6.8	86.76

	NODE	Vxx	Vyy
Max	Cent	-3.0	4.7
	564	-3.0	3.2
	565	-3.0	6.1
	572	-3.0	6.1
	571	-3.0	3.2
Min	Cent	-9.4	0.9
	564	-10.2	0.7
	565	-10.2	1.1
	572	-8.5	1.1
	571	-8.5	0.7

LC		NODE	Fxx	Fyy	Fxy	Fmax	Fmin	ANGLE
RC ENV~2	Max	Cent	-0.7	1.2	0.5	1.2	-0.7	82.38
		564	-0.7	1.1	0.5	1.2	-0.7	83.00
		565	-0.7	1.2	0.5	1.2	-0.7	83.05
		572	-0.7	1.2	0.5	1.2	-0.7	81.63
		571	-0.7	1.1	0.5	1.2	-0.7	81.56
	Min	Cent	-2.5	0.5	-0.1	0.5	-2.5	88.71
		564	-2.8	0.6	-0.1	0.6	-2.9	88.80
		565	-2.8	0.5	-0.1	0.5	-2.9	88.70
		572	-2.1	0.5	-0.1	0.5	-2.2	88.61
		571	-2.1	0.6	-0.1	0.6	-2.2	88.73

	NODE	Mxx	Myy	Mxy	Mmax	Mmin	ANGLE
Max	Cent	-1.0	1.1	0.8	1.2	-1.1	83.97
	564	-3.2	1.2	0.5	1.2	-3.3	88.36
	565	0.7	2.2	1.0	2.3	0.2	64.30
	572	1.0	0.7	1.0	1.3	-0.3	22.59
	571	-2.2	0.5	0.5	0.5	-2.3	87.84
Min	Cent	-3.2	-2.1	0.2	-2.0	-3.3	72.47
	564	-5.2	-2.0	-0.0	-2.0	-5.2	89.63
	565	-2.1	-1.1	0.3	-0.8	-2.1	60.41
	572	-1.7	-2.5	0.3	-1.2	-2.6	57.36
	571	-4.2	-2.7	-0.0	-2.7	-4.2	88.48

	NODE	Vxx	Vyy
Max	Cent	-4.4	3.3
	564	-4.6	2.3
	565	-4.6	4.4
	572	-4.2	4.4
	571	-4.2	2.3
Min	Cent	-6.9	1.8
	564	-7.5	1.3
	565	-7.5	2.3
	572	-6.3	2.3
	571	-6.3	1.3

ELEM	MAT	SEC	LC		NODE	Fxx	Fyy	Fxy	Fmax	Fmin	ANGLE
529	1	1	SX (RS)		Cent	2.1	0.8	1.3	2.9	0.0	31.99
					565	3.1	0.7	1.3	3.7	0.1	23.14
					566	3.1	1.2	1.3	3.8	0.6	26.55
					573	1.1	1.2	1.3	2.5	-0.1	45.91
					572	1.1	0.7	1.3	2.2	-0.4	40.07

	NODE	Mxx	Myy	Mxy	Mmax	Mmin	ANGLE
	Cent	5.2	1.4	0.3	5.3	1.4	4.55
	565	4.8	1.6	0.4	4.9	1.6	7.27
	566	7.0	3.1	0.3	7.1	3.0	4.75
	573	4.4	0.5	0.3	4.4	0.5	3.76
	572	4.7	0.9	0.4	4.8	0.8	5.84

	NODE	Vxx	Vyy
	Cent	1.6	3.2
	565	3.5	1.4
	566	3.5	5.0
	573	0.6	5.0

		572	0.6	1.4			

LC		NODE	Fxx	Fyy	Fxy	Fmax	Fmin	ANGLE
SY (RS)		Cent	0.8	0.8	2.7	3.5	-1.9	45.28
		565	1.4	0.2	2.7	3.6	-2.0	38.72
		566	1.4	1.8	2.7	4.3	-1.1	47.34
		573	0.3	1.8	2.7	3.9	-1.8	52.93
		572	0.3	0.2	2.7	2.9	-2.5	44.41

		NODE	Mxx	Myy	Mxy	Mmax	Mmin	ANGLE
		Cent	0.7	2.3	0.5	2.4	0.5	74.26
		565	0.8	1.7	0.4	1.9	0.7	67.64
		566	1.8	3.7	0.6	3.9	1.7	74.14
		573	0.7	2.1	0.6	2.4	0.4	69.90
		572	0.4	1.6	0.5	1.8	0.3	70.21

		NODE	Vxx	Vyy
		Cent	2.1	1.6
		565	3.1	0.3
		566	3.1	2.9
		573	1.1	2.9
		572	1.1	0.3

LC		NODE	Fxx	Fyy	Fxy	Fmax	Fmin	ANGLE
RC ENV~1	Max	Cent	0.9	1.3	3.2	3.8	-0.6	52.42
		565	1.5	1.6	3.2	3.6	-0.3	50.18
		566	1.5	2.0	3.2	4.3	-0.3	54.74
		573	0.4	2.0	3.2	4.2	-0.7	55.46
		572	0.4	1.6	3.2	3.5	-0.7	50.97
	Min	Cent	-3.6	-0.4	-2.2	-0.2	-4.3	-75.72
		565	-5.2	0.1	-2.2	0.2	-5.7	-80.96
		566	-5.2	-1.6	-2.2	-0.9	-5.8	-78.60
		573	-2.0	-1.6	-2.2	-0.5	-3.6	-58.86
		572	-2.0	0.1	-2.2	0.4	-3.0	-70.23

		NODE	Mxx	Myy	Mxy	Mmax	Mmin	ANGLE
	Max	Cent	7.1	3.8	2.2	7.4	2.7	13.10
		565	4.0	3.5	2.2	4.8	2.6	37.70
		566	12.1	7.5	2.1	12.7	6.7	19.55
		573	7.7	2.1	1.9	7.8	1.5	6.81
		572	4.7	2.3	2.0	5.0	1.2	15.72
	Min	Cent	-3.4	-2.6	0.2	0.2	-3.4	83.47
		565	-5.7	-2.3	0.3	-1.2	-5.7	49.60
		566	-2.0	0.1	0.1	0.8	-2.1	82.35
		573	-1.0	-4.7	-0.0	-0.3	-5.1	62.89
		572	-4.7	-3.9	0.1	-1.2	-4.7	39.39

		NODE	Vxx	Vyy
	Max	Cent	-5.9	11.3
		565	-6.4	6.1
		566	-6.4	16.6
		573	-5.1	16.6
		572	-5.1	6.1
	Min	Cent	-14.9	1.4
		565	-19.7	1.1
		566	-19.7	1.6
		573	-10.1	1.6
		572	-10.1	1.1

LC		NODE	Fxx	Fyy	Fxy	Fmax	Fmin	ANGLE
RC ENV~2	Max	Cent	-0.6	0.5	1.3	1.0	-0.6	70.35
		565	-0.6	1.2	1.3	1.5	-0.6	76.28
		566	-0.6	0.3	1.3	0.3	-0.6	76.74
		573	-0.6	0.3	1.3	0.7	-0.6	55.81
		572	-0.6	1.2	1.3	1.7	-0.6	67.93
	Min	Cent	-2.6	0.2	-0.0	0.3	-3.0	80.17
		565	-3.7	0.5	-0.0	0.5	-4.0	-88.43
		566	-3.7	-0.2	-0.0	0.1	-4.1	73.60
		573	-1.4	-0.2	-0.0	0.1	-2.2	75.14

572	-1.4	0.5	-0.0	0.5	-2.0	-88.44

	NODE	Mxx	Myy	Mxy	Mmax	Mmin	ANGLE
Max	Cent	3.9	1.8	1.6	4.5	1.2	25.59
	565	0.4	2.1	1.5	2.6	-0.4	60.77
	566	8.6	5.1	1.5	9.1	4.6	20.15
	573	5.3	0.0	1.3	5.5	-0.1	8.80
	572	1.6	0.8	1.4	2.2	-0.2	24.55
Min	Cent	0.4	-1.4	0.7	0.9	-1.8	31.95
	565	-2.3	-1.1	0.7	-0.5	-2.7	56.20
	566	3.0	0.8	0.7	3.4	0.4	24.64
	573	2.1	-3.0	0.6	2.3	-3.2	12.23
	572	-1.3	-2.4	0.6	-0.7	-2.7	45.41

	NODE	Vxx	Vyy
Max	Cent	-7.6	8.1
	565	-8.9	4.4
	566	-8.9	11.9
	573	-6.2	11.9
	572	-6.2	4.4
Min	Cent	-11.0	3.9
	565	-14.4	2.3
	566	-14.4	5.4
	573	-7.5	5.4
	572	-7.5	2.3

ELEM	MAT	SEC	LC		NODE	Fxx	Fyy	Fxy	Fmax	Fmin	ANGLE
530	1	1	SX	(RS)	Cent	0.8	1.1	1.0	2.0	-0.0	49.63
					566	0.5	1.0	1.0	1.8	-0.2	52.07
					212	0.5	1.4	1.0	2.0	-0.1	56.60
					215	1.3	1.4	1.0	2.3	0.3	46.61
					573	1.3	1.0	1.0	2.2	0.1	41.57

NODE	Mxx	Myy	Mxy	Mmax	Mmin	ANGLE
Cent	3.0	1.1	0.9	3.3	0.7	21.77
566	7.6	3.2	1.2	7.9	2.9	14.26
212	4.1	1.0	0.4	4.2	0.9	6.54
215	4.2	1.4	0.3	4.2	1.3	5.76
573	4.1	0.5	1.2	4.5	0.1	17.03

NODE	Vxx	Vyy
Cent	10.0	2.4
566	19.6	5.0
212	19.6	0.3
215	0.4	0.3
573	0.4	5.0

LC		NODE	Fxx	Fyy	Fxy	Fmax	Fmin	ANGLE
SY	(RS)	Cent	0.7	2.5	2.2	4.0	-0.8	56.02
		566	1.1	1.6	2.2	3.6	-0.9	48.09
		212	1.1	3.5	2.2	4.8	-0.2	59.06
		215	0.5	3.5	2.2	4.6	-0.7	61.98
		573	0.5	1.6	2.2	3.3	-1.2	51.95

NODE	Mxx	Myy	Mxy	Mmax	Mmin	ANGLE
Cent	1.2	3.0	0.9	3.4	0.8	68.57
566	1.3	3.3	0.9	3.6	1.0	69.81
212	3.6	5.2	0.7	5.4	3.3	70.75
215	1.1	1.6	0.7	2.1	0.6	53.71
573	0.9	2.2	0.9	2.7	0.4	62.65

NODE	Vxx	Vyy
Cent	3.9	4.4
566	7.4	2.9
212	7.4	6.1
215	0.6	6.1
573	0.6	2.9

LC		NODE	Fxx	Fyy	Fxy	Fmax	Fmin	ANGLE
RC ENV~1	Max	Cent	0.3	2.9	2.6	4.5	-0.5	58.71
		566	0.8	1.9	2.6	4.0	-0.5	50.81
		212	0.8	4.0	2.6	5.4	-0.5	60.46
		215	0.5	4.0	2.6	5.2	-0.3	64.47
		573	0.5	1.9	2.6	3.7	-0.4	56.27
	Min	Cent	-1.4	-2.1	-1.8	-0.3	-3.5	-57.91
		566	-1.4	-1.3	-1.8	-0.1	-3.1	-47.08
		212	-1.4	-3.0	-1.8	-0.2	-4.2	-42.64
		215	-2.2	-3.0	-1.8	-0.6	-4.1	-66.38
		573	-2.2	-1.3	-1.8	-0.5	-3.1	-68.60

		NODE	Mxx	Myy	Mxy	Mmax	Mmin	ANGLE
	Max	Cent	10.6	4.9	1.3	10.6	4.5	3.95
		566	13.8	7.3	1.6	14.0	7.0	7.58
		212	10.2	8.0	1.6	10.3	7.5	6.72
		215	13.5	2.1	1.1	13.5	2.0	3.30
		573	7.6	2.2	1.3	7.9	1.9	9.76
	Min	Cent	2.8	-2.1	-0.8	3.0	-2.2	-18.93
		566	-1.8	0.4	-0.9	1.0	-2.0	-72.64
		212	1.9	-2.4	-0.3	1.9	-2.4	21.03
		215	3.3	-4.4	-0.6	3.3	-4.4	-2.45
		573	-0.6	-4.6	-1.2	0.7	-4.8	-46.24

		NODE	Vxx	Vyy
	Max	Cent	6.2	13.8
		566	18.8	16.6
		212	18.8	11.0
		215	-6.3	11.0
		573	-6.3	16.6
	Min	Cent	-13.8	1.3
		566	-20.4	1.6
		212	-20.4	-1.2
		215	-10.3	-1.2
		573	-10.3	1.6

LC		NODE	Fxx	Fyy	Fxy	Fmax	Fmin	ANGLE
RC ENV~2	Max	Cent	-0.4	0.5	1.0	0.9	-0.4	61.00
		566	-0.1	0.4	1.0	0.9	-0.4	49.95
		212	-0.1	0.7	1.0	1.3	-0.4	57.95
		215	-0.4	0.7	1.0	1.1	-0.4	68.54
		573	-0.4	0.4	1.0	0.6	-0.4	65.79
	Min	Cent	-1.0	0.0	-0.0	0.1	-1.5	72.90
		566	-0.6	-0.0	-0.0	0.2	-1.1	72.39
		212	-0.6	-0.0	-0.0	-0.0	-1.0	-88.42
		215	-1.6	-0.0	-0.0	-0.0	-1.9	-88.45
		573	-1.6	-0.0	-0.0	0.2	-2.0	77.04

		NODE	Mxx	Myy	Mxy	Mmax	Mmin	ANGLE
	Max	Cent	7.8	2.1	0.8	7.8	2.1	3.67
		566	10.0	5.4	1.1	10.1	5.3	7.59
		212	7.3	3.0	1.1	7.4	2.9	7.43
		215	10.0	0.6	0.7	10.0	0.6	3.03
		573	5.5	0.1	0.7	5.5	0.1	0.14
	Min	Cent	4.9	-1.0	0.1	5.0	-1.1	7.54
		566	3.6	1.0	0.3	3.9	0.7	20.13
		212	5.6	0.6	0.4	5.8	0.5	12.41
		215	6.3	-2.7	0.1	6.3	-2.7	3.13
		573	2.4	-2.9	-0.0	2.5	-3.0	8.82

		NODE	Vxx	Vyy
	Max	Cent	-0.5	9.9
		566	6.6	11.9
		212	6.6	7.9
		215	-6.8	7.9
		573	-6.8	11.9
	Min	Cent	-6.7	5.4
		566	-6.5	5.4
		212	-6.5	4.8
		215	-7.8	4.8
		573	-7.8	5.4

ELEM	MAT	SEC	LC		NODE	Fxx	Fyy	Fxy	Fmax	Fmin	ANGLE
531	1	1	SX	(RS)	Cent	0.3	0.2	0.4	0.7	-0.2	42.98
					520	0.5	0.1	0.4	0.8	-0.2	32.27
					567	0.5	0.4	0.4	0.9	0.0	43.00
					574	0.2	0.4	0.4	0.8	-0.2	53.20
					528	0.2	0.1	0.4	0.6	-0.3	41.82

		NODE	Mxx	Myy	Mxy	Mmax	Mmin	ANGLE
		Cent	1.3	0.2	0.7	1.7	-0.1	25.90
		520	2.0	0.4	1.2	2.6	-0.2	28.08
		567	2.0	0.5	0.6	2.3	0.3	20.28
		574	1.5	0.8	0.3	1.6	0.7	18.79
		528	0.0	0.0	0.8	0.8	-0.8	44.68

		NODE	Vxx	Vyy
		Cent	1.8	0.1
		520	1.1	0.0
		567	1.1	0.2
		574	2.9	0.2
		528	2.9	0.0

LC		NODE	Fxx	Fyy	Fxy	Fmax	Fmin	ANGLE
SY	(RS)	Cent	0.4	1.4	0.7	1.7	0.0	63.31
		520	0.7	1.6	0.7	2.0	0.3	62.25
		567	0.7	1.2	0.7	1.7	0.2	54.38
		574	0.1	1.2	0.7	1.5	-0.3	64.30
		528	0.1	1.6	0.7	1.9	-0.2	69.45

		NODE	Mxx	Myy	Mxy	Mmax	Mmin	ANGLE
		Cent	1.2	1.9	0.5	2.2	1.0	62.63
		520	2.3	3.2	0.3	3.3	2.2	73.65
		567	1.7	3.2	0.7	3.5	1.4	68.43
		574	0.4	0.7	0.6	1.2	-0.1	52.44
		528	0.6	0.5	0.2	0.8	0.3	37.52

		NODE	Vxx	Vyy
		Cent	0.8	4.5
		520	1.1	4.6
		567	1.1	4.3
		574	0.5	4.3
		528	0.5	4.6

LC		NODE	Fxx	Fyy	Fxy	Fmax	Fmin	ANGLE
RC ENV~1	Max	Cent	-0.6	2.2	0.7	2.4	-0.8	77.17
		520	-0.3	2.4	0.7	2.6	-0.4	76.76
		567	-0.3	2.0	0.7	2.2	-0.5	74.51
		574	-0.8	2.0	0.7	2.1	-0.9	77.56
		528	-0.8	2.4	0.7	2.6	-0.9	79.09
	Min	Cent	-2.9	-0.6	-0.7	-0.2	-2.9	-59.32
		520	-2.9	-0.8	-0.7	-0.4	-2.9	-60.16
		567	-2.9	-0.3	-0.7	-0.0	-2.9	-66.57
		574	-2.9	-0.3	-0.7	0.1	-2.9	-58.47
		528	-2.9	-0.8	-0.7	-0.2	-2.9	-49.43

		NODE	Mxx	Myy	Mxy	Mmax	Mmin	ANGLE
	Max	Cent	3.1	0.8	-0.6	4.3	-0.2	-21.58
		520	5.5	3.0	0.0	6.5	1.9	-19.44
		567	3.1	3.1	-0.8	5.0	0.7	-27.99
		574	1.4	-1.2	-0.7	2.8	-1.8	-22.44
		528	2.3	-1.8	-0.2	3.1	-2.2	-16.50
	Min	Cent	-2.2	-5.2	-4.1	-0.8	-7.5	-36.92
		520	-2.1	-3.7	-3.9	-1.1	-6.0	-32.35
		567	-2.8	-4.1	-4.3	-0.7	-6.8	-38.67
		574	-3.0	-6.8	-4.2	-1.2	-8.7	-47.97
		528	-1.8	-6.9	-3.8	-1.1	-8.5	-9.66

		NODE	Vxx	Vyy

Max	Cent	3.1	7.7
	520	4.2	8.0
	567	4.2	7.4
	574	3.7	7.4
	528	3.7	8.0
Min	Cent	-0.5	-1.2
	520	0.6	-1.2
	567	0.6	-1.3
	574	-2.1	-1.3
	528	-2.1	-1.2

LC		NODE	Fxx	Fyy	Fxy	Fmax	Fmin	ANGLE
RC ENV~2	Max	Cent	-0.7	1.4	0.0	1.4	-0.7	-89.10
		520	-0.6	1.4	0.0	1.4	-0.6	-89.11
		567	-0.6	1.4	0.0	1.4	-0.6	89.83
		574	-0.7	1.4	0.0	1.4	-0.7	89.83
		528	-0.7	1.4	0.0	1.4	-0.7	-89.11
	Min	Cent	-2.0	0.7	-0.1	0.7	-2.0	89.60
		520	-2.0	0.7	-0.1	0.7	-2.0	88.49
		567	-2.0	0.7	-0.1	0.7	-2.0	-88.46
		574	-2.0	0.7	-0.1	0.7	-2.0	-88.45
		528	-2.0	0.7	-0.1	0.7	-2.0	88.58

	NODE	Mxx	Myy	Mxy	Mmax	Mmin	ANGLE
Max	Cent	1.9	-1.1	-1.2	2.8	-2.1	-22.57
	520	3.7	-0.1	-1.1	4.4	-0.8	-20.28
	567	2.0	-0.0	-1.5	3.4	-1.7	-29.63
	574	0.7	-1.9	-1.3	1.7	-3.0	-23.45
	528	1.3	-2.3	-1.0	1.9	-2.8	-16.93
Min	Cent	-1.0	-3.5	-2.8	0.3	-5.1	-42.20
	520	-0.1	-2.4	-2.7	1.1	-4.0	-40.78
	567	-1.0	-2.6	-3.0	1.0	-4.6	-51.19
	574	-1.6	-4.7	-2.9	-0.4	-6.1	-42.17
	528	-1.2	-4.8	-2.6	-0.6	-5.9	-31.73

	NODE	Vxx	Vyy
Max	Cent	2.1	5.0
	520	3.0	5.2
	567	3.0	4.7
	574	1.5	4.7
	528	1.5	5.2
Min	Cent	1.3	3.2
	520	1.6	3.4
	567	1.6	3.0
	574	0.6	3.0
	528	0.6	3.4

ELEM	MAT	SEC	LC		NODE	Fxx	Fyy	Fxy	Fmax	Fmin	ANGLE
532	1	1	SX (RS)		Cent	0.6	0.5	0.5	1.0	0.0	42.53
					567	0.6	0.4	0.5	1.0	0.0	41.41
					568	0.6	0.5	0.5	1.0	0.1	44.44
					575	0.6	0.5	0.5	1.1	0.1	43.71
					574	0.6	0.4	0.5	1.0	0.0	40.70

	NODE	Mxx	Myy	Mxy	Mmax	Mmin	ANGLE
	Cent	2.3	0.5	0.1	2.3	0.5	2.32
	567	2.3	0.5	0.1	2.3	0.5	4.60
	568	3.0	0.4	0.1	3.0	0.4	3.13
	575	2.4	0.8	0.0	2.4	0.8	1.48
	574	1.7	0.7	0.2	1.7	0.7	12.80

	NODE	Vxx	Vyy
	Cent	1.3	0.8
	567	1.3	0.2
	568	1.3	1.3
	575	1.4	1.3
	574	1.4	0.2

LC		NODE	Fxx	Fyy	Fxy	Fmax	Fmin	ANGLE

SY (RS)	Cent	0.1	0.7	1.7	2.1	-1.3	50.53
	567	0.2	1.2	1.7	2.5	-1.0	53.26
	568	0.2	0.3	1.7	1.9	-1.4	45.55
	575	0.0	0.3	1.7	1.8	-1.5	47.08
	574	0.0	1.2	1.7	2.4	-1.1	54.65

	NODE	Mxx	Myy	Mxy	Mmax	Mmin	ANGLE
	Cent	0.3	1.8	0.9	2.2	-0.1	64.85
	567	1.1	3.1	0.8	3.4	0.8	69.98
	568	0.3	2.2	0.7	2.5	0.0	71.33
	575	0.1	0.9	0.8	1.4	-0.4	59.16
	574	0.5	0.7	0.9	1.5	-0.3	49.33

	NODE	Vxx	Vyy
	Cent	1.5	3.5
	567	2.2	4.3
	568	2.2	2.6
	575	0.8	2.6
	574	0.8	4.3

LC		NODE	Fxx	Fyy	Fxy	Fmax	Fmin	ANGLE
RC ENV~1	Max	Cent	-0.4	1.9	1.6	2.4	-0.5	63.62
		567	-0.4	2.0	1.6	2.8	-0.5	65.29
		568	-0.4	1.9	1.6	2.1	-0.5	60.09
		575	-0.4	1.9	1.6	2.0	-0.5	61.35
		574	-0.4	2.0	1.6	2.8	-0.5	66.27
	Min	Cent	-2.8	0.1	-1.7	0.5	-2.8	-75.89
		567	-2.8	-0.4	-1.7	0.5	-2.8	-76.00
		568	-2.8	0.3	-1.7	0.4	-2.8	-75.49
		575	-2.8	0.3	-1.7	0.4	-2.8	-75.77
		574	-2.8	-0.4	-1.7	0.5	-2.8	-76.26

		NODE	Mxx	Myy	Mxy	Mmax	Mmin	ANGLE
	Max	Cent	0.1	0.9	-0.8	2.5	-1.7	-34.42
		567	2.4	2.9	-0.9	4.9	-0.3	-31.61
		568	-0.0	2.1	-1.0	2.3	-1.5	-78.61
		575	-0.5	-0.2	-0.7	1.0	-1.9	-45.96
		574	0.8	-1.3	-0.6	2.4	-1.9	-24.17
	Min	Cent	-4.6	-5.3	-4.4	-0.6	-8.2	-66.48
		567	-3.4	-4.2	-4.6	-0.2	-7.2	-38.90
		568	-6.1	-4.4	-4.5	-0.3	-8.3	-50.54
		575	-5.2	-5.9	-4.0	-1.3	-8.5	-68.84
		574	-3.6	-6.9	-4.2	-1.4	-8.9	-52.44

		NODE	Vxx	Vyy
	Max	Cent	6.7	6.0
		567	8.4	7.4
		568	8.4	4.7
		575	5.0	4.7
		574	5.0	7.4
	Min	Cent	1.3	-0.9
		567	1.3	-1.3
		568	1.3	-0.5
		575	0.6	-0.5
		574	0.6	-1.3

LC		NODE	Fxx	Fyy	Fxy	Fmax	Fmin	ANGLE
RC ENV~2	Max	Cent	-0.9	1.4	0.0	1.4	-0.9	-89.89
		567	-0.9	1.3	0.0	1.4	-0.9	-88.60
		568	-0.9	1.4	0.0	1.4	-0.9	-89.90
		575	-0.9	1.4	0.0	1.4	-0.9	-89.90
		574	-0.9	1.3	0.0	1.4	-0.9	-88.62
	Min	Cent	-2.0	0.7	-0.1	0.7	-2.0	-87.70
		567	-2.0	0.7	-0.1	0.7	-2.0	89.98
		568	-2.0	0.7	-0.1	0.7	-2.0	-87.67
		575	-2.0	0.7	-0.1	0.7	-2.0	-87.71
		574	-2.0	0.7	-0.1	0.7	-2.0	89.98

		NODE	Mxx	Myy	Mxy	Mmax	Mmin	ANGLE
	Max	Cent	-0.4	-0.8	-1.6	1.6	-3.2	-36.60

567	1.4	-0.1	-1.8	3.4	-2.3	-33.39
568	-1.9	0.0	-1.8	1.5	-3.7	-49.70
575	-1.5	-1.1	-1.5	0.5	-3.6	-39.06
574	0.2	-2.0	-1.5	1.4	-3.3	-25.44
Min Cent	-2.4	-3.5	-3.1	0.0	-5.7	-45.83
567	-1.4	-2.7	-3.2	1.0	-4.9	-43.95
568	-3.4	-2.8	-3.2	-0.1	-5.9	-46.98
575	-2.9	-4.0	-2.8	-0.5	-5.9	-47.28
574	-2.0	-4.7	-2.9	-0.5	-6.2	-45.17

	NODE	Vxx	Vyy
Max	Cent	4.8	4.0
	567	6.0	4.7
	568	6.0	3.2
	575	3.6	3.2
	574	3.6	4.7
Min	Cent	2.7	2.5
	567	3.4	3.0
	568	3.4	1.9
	575	1.9	1.9
	574	1.9	3.0

ELEM	MAT	SEC	LC		NODE	Fxx	Fyy	Fxy	Fmax	Fmin	ANGLE
533	1	1	SX (RS)		Cent	1.1	0.5	0.5	1.4	0.2	29.33
					568	1.3	0.6	0.5	1.6	0.4	28.22
					569	1.3	0.4	0.5	1.5	0.1	23.45
					576	0.9	0.4	0.5	1.2	0.1	30.32
					575	0.9	0.6	0.5	1.3	0.3	36.91

	NODE	Mxx	Myy	Mxy	Mmax	Mmin	ANGLE
	Cent	2.5	0.5	0.3	2.5	0.5	8.05
	568	2.7	0.4	0.3	2.8	0.4	7.60
	569	2.5	0.6	0.4	2.5	0.5	10.24
	576	2.6	0.6	0.2	2.6	0.6	6.38
	575	2.3	0.8	0.2	2.3	0.7	6.76

	NODE	Vxx	Vyy
	Cent	1.7	1.0
	568	2.0	1.3
	569	2.0	0.6
	576	1.4	0.6
	575	1.4	1.3

LC	NODE	Fxx	Fyy	Fxy	Fmax	Fmin	ANGLE
SY (RS)	Cent	0.2	0.2	1.8	2.0	-1.7	44.63
	568	0.4	0.3	1.8	2.2	-1.5	44.75
	569	0.4	0.1	1.8	2.1	-1.6	42.82
	576	0.1	0.1	1.8	1.9	-1.8	45.31
	575	0.1	0.3	1.8	2.0	-1.7	47.24

	NODE	Mxx	Myy	Mxy	Mmax	Mmin	ANGLE
	Cent	0.1	1.3	0.5	1.5	-0.1	69.21
	568	0.2	2.3	0.5	2.5	0.1	77.38
	569	0.6	1.3	0.3	1.5	0.5	68.46
	576	0.2	0.7	0.5	1.0	-0.2	58.81
	575	0.1	1.0	0.7	1.4	-0.3	60.48

	NODE	Vxx	Vyy
	Cent	0.8	2.0
	568	1.1	2.6
	569	1.1	1.4
	576	0.4	1.4
	575	0.4	2.6

LC		NODE	Fxx	Fyy	Fxy	Fmax	Fmin	ANGLE
RC ENV~1	Max	Cent	0.1	1.8	1.8	2.1	-0.1	58.22
		568	0.3	1.9	1.8	2.3	0.1	58.35
		569	0.3	1.8	1.8	2.1	0.1	56.69

		576	-0.1	1.8	1.8	2.0	-0.3	58.72
		575	-0.1	1.9	1.8	2.2	-0.2	60.27
	Min	Cent	-2.8	0.3	-1.9	0.5	-2.8	-78.58
		568	-2.8	0.2	-1.9	0.3	-2.8	-78.83
		569	-2.8	0.5	-1.9	0.6	-2.8	-79.79
		576	-2.7	0.5	-1.9	0.6	-2.7	-78.35
		575	-2.7	0.2	-1.9	0.3	-2.7	-77.11

		NODE	Mxx	Myy	Mxy	Mmax	Mmin	ANGLE
	Max	Cent	-1.4	0.7	-0.8	0.9	-2.0	-79.91
		568	-0.7	2.2	-1.0	2.3	-1.6	-79.44
		569	-2.2	1.1	-1.0	1.3	-2.5	-79.45
		576	-1.5	-0.0	-0.6	0.3	-2.0	-63.07
		575	-1.0	-0.3	-0.7	0.5	-2.0	-51.31
	Min	Cent	-6.3	-5.3	-3.5	-1.7	-8.2	-43.59
		568	-6.1	-4.5	-3.9	-1.0	-8.0	-52.55
		569	-7.1	-5.0	-3.3	-2.5	-8.8	-50.97
		576	-6.6	-5.6	-3.0	-2.2	-8.1	-41.51
		575	-5.6	-6.0	-3.7	-1.4	-8.4	-69.59

		NODE	Vxx	Vyy
	Max	Cent	5.3	3.6
		568	6.1	4.7
		569	6.1	2.6
		576	4.6	2.6
		575	4.6	4.7
	Min	Cent	0.1	-0.4
		568	0.1	-0.5
		569	0.1	-0.2
		576	0.1	-0.2
		575	0.1	-0.5

LC		NODE	Fxx	Fyy	Fxy	Fmax	Fmin	ANGLE
RC ENV~2	Max	Cent	-1.0	1.3	0.0	1.3	-1.0	89.72
		568	-0.9	1.4	0.0	1.4	-0.9	89.72
		569	-0.9	1.3	0.0	1.3	-0.9	89.72
		576	-1.0	1.3	0.0	1.3	-1.0	89.72
		575	-1.0	1.4	0.0	1.4	-1.0	89.72
	Min	Cent	-2.0	0.7	-0.1	0.7	-2.0	-87.65
		568	-2.0	0.7	-0.1	0.7	-2.0	-87.69
		569	-2.0	0.7	-0.1	0.7	-2.0	-87.67
		576	-2.0	0.7	-0.1	0.7	-2.0	-87.61
		575	-2.0	0.7	-0.1	0.7	-2.0	-87.63

		NODE	Mxx	Myy	Mxy	Mmax	Mmin	ANGLE
	Max	Cent	-3.4	-0.5	-1.3	0.0	-4.3	-69.99
		568	-2.5	-0.0	-1.5	0.8	-3.9	-52.96
		569	-4.6	-0.1	-1.3	0.3	-5.0	-74.67
		576	-3.7	-0.6	-1.1	-0.2	-4.4	-72.82
		575	-2.2	-1.2	-1.4	-0.2	-3.9	-41.85
	Min	Cent	-3.9	-3.4	-2.5	-1.2	-5.8	-47.50
		568	-3.6	-2.9	-2.7	-0.6	-5.6	-48.45
		569	-4.9	-3.2	-2.3	-1.6	-6.4	-55.17
		576	-4.1	-3.6	-2.1	-1.7	-5.8	-46.02
		575	-3.4	-4.0	-2.6	-1.0	-5.9	-49.70

		NODE	Vxx	Vyy
	Max	Cent	3.8	2.5
		568	4.3	3.2
		569	4.3	1.7
		576	3.2	1.7
		575	3.2	3.2
	Min	Cent	1.4	1.5
		568	1.7	1.9
		569	1.7	1.1
		576	1.2	1.1
		575	1.2	1.9

ELEM	MAT	SEC	LC		NODE	Fxx	Fyy	Fxy	Fmax	Fmin	ANGLE
534	1	1	SX (RS)		Cent	1.3	0.4	0.3	1.4	0.3	16.54
					569	1.5	0.4	0.3	1.5	0.3	14.94

```
                    570        1.5        0.4        0.3        1.5        0.3       15.29
                    577        1.2        0.4        0.3        1.3        0.3       18.48
                    576        1.2        0.4        0.3        1.3        0.3       17.99

                   NODE        Mxx        Myy        Mxy       Mmax       Mmin      ANGLE
             ---- ------ ---------- ---------- ---------- ---------- ---------- ----------
                   Cent        2.6        0.6        0.2        2.6        0.6       5.99
                    569        2.4        0.6        0.3        2.4        0.5       8.32
                    570        2.8        0.7        0.2        2.8        0.7       5.78
                    577        2.9        0.7        0.1        2.9        0.6       3.57
                    576        2.5        0.6        0.2        2.5        0.6       5.97

                   NODE        Vxx        Vyy
             ---- ------ ---------- ----------
                   Cent        1.9        0.5
                    569        2.0        0.6
                    570        2.0        0.3
                    577        1.8        0.3
                    576        1.8        0.6


        LC         NODE        Fxx        Fyy        Fxy       Fmax       Fmin      ANGLE
-------- ---- ------ ---------- ---------- ---------- ---------- ---------- ----------
      SY (RS)   Cent        0.1        0.1        1.8        1.9       -1.7      44.54
                    569        0.2        0.1        1.8        2.0       -1.7      44.15
                    570        0.2        0.1        1.8        2.0       -1.7      43.99
                    577        0.1        0.1        1.8        1.9       -1.7      44.96
                    576        0.1        0.1        1.8        1.9       -1.7      45.12

                   NODE        Mxx        Myy        Mxy       Mmax       Mmin      ANGLE
             ---- ------ ---------- ---------- ---------- ---------- ---------- ----------
                   Cent        0.2        0.9        0.2        1.0        0.2      76.43
                    569        0.2        1.4        0.2        1.5        0.2      81.20
                    570        0.4        1.0        0.1        1.0        0.4      84.24
                    577        0.2        0.5        0.2        0.6        0.1      68.65
                    576        0.0        0.7        0.3        0.9       -0.1      69.20

                   NODE        Vxx        Vyy
             ---- ------ ---------- ----------
                   Cent        0.2        1.2
                    569        0.2        1.4
                    570        0.2        1.1
                    577        0.1        1.1
                    576        0.1        1.4


        LC         NODE        Fxx        Fyy        Fxy       Fmax       Fmin      ANGLE
-------- ---- ------ ---------- ---------- ---------- ---------- ---------- ----------
RC ENV~1  Max   Cent        0.3        1.7        1.8        2.0        0.2      57.94
                    569        0.4        1.8        1.8        2.1        0.3      57.89
                    570        0.4        1.6        1.8        2.0        0.3      57.37
                    577        0.2        1.6        1.8        2.0        0.1      58.02
                    576        0.2        1.8        1.8        2.1        0.1      58.53
           Min   Cent       -2.8        0.4       -1.8        0.4       -2.8     -83.80
                    569       -2.8        0.5       -1.8        0.5       -2.8     -84.14
                    570       -2.8        0.4       -1.8        0.4       -2.8     -83.97
                    577       -2.7        0.4       -1.8        0.4       -2.7     -83.41
                    576       -2.7        0.5       -1.8        0.5       -2.7     -83.62

                   NODE        Mxx        Myy        Mxy       Mmax       Mmin      ANGLE
             ---- ------ ---------- ---------- ---------- ---------- ---------- ----------
           Max   Cent       -1.9        0.5       -0.7        0.6       -2.1     -81.74
                    569       -2.3        1.2       -0.7        1.3       -2.5     -81.97
                    570       -1.9        0.8       -0.6        0.9       -2.0     -81.99
                    577       -1.3        0.1       -0.6        0.3       -1.5     -69.28
                    576       -1.8       -0.0       -0.7        0.1       -2.1     -68.58
           Min   Cent       -7.1       -5.3       -2.2       -3.5       -7.8     -48.57
                    569       -7.1       -4.9       -2.5       -3.1       -8.1     -52.27
                    570       -7.6       -5.2       -1.8       -4.0       -8.2     -56.21
                    577       -7.1       -5.6       -1.8       -3.7       -7.4     -44.19
                    576       -6.8       -5.6       -2.5       -2.9       -7.8     -41.97

                   NODE        Vxx        Vyy
             ---- ------ ---------- ----------
           Max   Cent        1.8        2.3
                    569        2.0        2.6
                    570        2.0        1.9
                    577        1.7        1.9
                    576        1.7        2.6
```

	Min	Cent	-2.0	-0.2
		569	-2.0	-0.2
		570	-2.0	-0.2
		577	-2.0	-0.2
		576	-2.0	-0.2

LC		NODE	Fxx	Fyy	Fxy	Fmax	Fmin	ANGLE
RC ENV~2	Max	Cent	-1.0	1.2	0.1	1.2	-1.0	89.03
		569	-1.0	1.3	0.1	1.3	-1.0	-89.55
		570	-1.0	1.2	0.1	1.2	-1.0	89.02
		577	-1.0	1.2	0.1	1.2	-1.0	89.00
		576	-1.0	1.3	0.1	1.3	-1.0	-89.55
	Min	Cent	-2.0	0.7	-0.1	0.7	-2.0	-88.51
		569	-2.0	0.7	-0.1	0.7	-2.0	88.92
		570	-2.0	0.6	-0.1	0.6	-2.0	-88.48
		577	-1.9	0.6	-0.1	0.6	-2.0	-88.46
		576	-1.9	0.7	-0.1	0.7	-2.0	88.90

	NODE	Mxx	Myy	Mxy	Mmax	Mmin	ANGLE
Max	Cent	-4.1	-0.3	-0.9	-0.1	-4.6	-78.47
	569	-4.6	-0.1	-1.0	0.1	-4.9	-78.11
	570	-4.3	-0.1	-0.8	0.0	-4.6	-80.72
	577	-3.6	-0.5	-0.7	-0.3	-4.1	-79.14
	576	-3.9	-0.7	-1.0	-0.4	-4.5	-75.81
Min	Cent	-4.9	-3.5	-1.5	-2.4	-5.6	-54.76
	569	-5.0	-3.2	-1.7	-2.1	-5.9	-57.54
	570	-5.7	-3.4	-1.3	-2.7	-6.0	-62.13
	577	-4.7	-3.6	-1.3	-2.6	-5.3	-51.48
	576	-4.4	-3.7	-1.7	-2.1	-5.5	-47.64

	NODE	Vxx	Vyy
Max	Cent	1.1	1.5
	569	1.2	1.7
	570	1.2	1.2
	577	1.0	1.2
	576	1.0	1.7
Min	Cent	-0.6	1.0
	569	-0.6	1.1
	570	-0.6	0.8
	577	-0.7	0.8
	576	-0.7	1.1

ELEM	MAT	SEC	LC		NODE	Fxx	Fyy	Fxy	Fmax	Fmin	ANGLE
535	1	1	SX	(RS)	Cent	1.5	0.5	0.3	1.5	0.4	14.69
					570	1.6	0.4	0.3	1.7	0.3	12.75
					571	1.6	0.5	0.3	1.7	0.4	13.89
					578	1.3	0.5	0.3	1.4	0.4	17.24
					577	1.3	0.4	0.3	1.4	0.3	15.58

	NODE	Mxx	Myy	Mxy	Mmax	Mmin	ANGLE
	Cent	3.2	0.7	0.2	3.2	0.7	3.79
	570	2.8	0.7	0.2	2.8	0.7	4.93
	571	3.6	0.9	0.2	3.6	0.8	4.31
	578	3.6	0.6	0.1	3.6	0.6	2.86
	577	2.9	0.7	0.1	3.0	0.7	3.19

	NODE	Vxx	Vyy
	Cent	1.8	0.4
	570	1.9	0.3
	571	1.9	0.5
	578	1.7	0.5
	577	1.7	0.3

LC		NODE	Fxx	Fyy	Fxy	Fmax	Fmin	ANGLE
SY	(RS)	Cent	0.2	0.1	2.0	2.1	-1.8	44.02
		570	0.3	0.1	2.0	2.2	-1.8	43.17
		571	0.3	0.1	2.0	2.2	-1.8	43.47
		578	0.1	0.1	2.0	2.1	-1.9	44.87
		577	0.1	0.1	2.0	2.1	-1.9	44.57

	NODE	Mxx	Myy	Mxy	Mmax	Mmin	ANGLE
	Cent	0.2	0.8	0.1	0.8	0.2	80.99
	570	0.3	1.0	0.1	1.1	0.3	85.13
	571	0.4	1.1	0.2	1.1	0.3	76.49
	578	0.1	0.5	0.2	0.6	0.1	72.24
	577	0.1	0.5	0.0	0.5	0.1	85.74

	NODE	Vxx	Vyy
	Cent	0.1	1.1
	570	0.2	1.1
	571	0.2	1.1
	578	0.1	1.1
	577	0.1	1.1

LC		NODE	Fxx	Fyy	Fxy	Fmax	Fmin	ANGLE
RC ENV~1	Max	Cent	0.4	1.5	2.0	2.2	0.3	55.83
		570	0.5	1.6	2.0	2.2	0.4	55.67
		571	0.5	1.3	2.0	2.2	0.4	55.36
		578	0.4	1.3	2.0	2.2	0.2	55.98
		577	0.4	1.6	2.0	2.2	0.2	56.29
	Min	Cent	-2.8	0.3	-1.9	0.3	-2.8	-85.31
		570	-3.0	0.4	-1.9	0.4	-3.0	-85.72
		571	-3.0	0.2	-1.9	0.2	-3.0	-85.42
		578	-2.6	0.2	-1.9	0.2	-2.7	-84.80
		577	-2.6	0.4	-1.9	0.4	-2.7	-85.19

	NODE	Mxx	Myy	Mxy	Mmax	Mmin	ANGLE
Max	Cent	-0.6	0.4	-0.3	0.5	-0.6	-85.23
	570	-1.8	0.8	-0.3	0.9	-1.9	-85.17
	571	0.3	1.0	-0.1	1.0	0.2	-88.31
	578	0.6	0.1	-0.2	0.7	0.0	-18.57
	577	-1.2	0.1	-0.4	0.2	-1.4	-73.05
Min	Cent	-7.0	-5.4	-1.0	-4.4	-7.0	-54.71
	570	-7.4	-5.2	-1.2	-4.5	-7.5	-59.94
	571	-6.9	-5.2	-0.7	-4.6	-6.9	-63.75
	578	-6.5	-5.7	-0.8	-4.1	-6.6	-27.12
	577	-7.1	-5.6	-1.3	-4.2	-7.2	-50.17

	NODE	Vxx	Vyy
Max	Cent	-0.5	2.0
	570	-0.4	1.9
	571	-0.4	2.2
	578	-0.5	2.2
	577	-0.5	1.9
Min	Cent	-4.0	-0.1
	570	-4.2	-0.2
	571	-4.2	-0.0
	578	-3.9	-0.0
	577	-3.9	-0.2

LC		NODE	Fxx	Fyy	Fxy	Fmax	Fmin	ANGLE
RC ENV~2	Max	Cent	-0.9	1.1	0.2	1.1	-0.9	86.93
		570	-0.9	1.2	0.2	1.2	-0.9	89.13
		571	-0.9	1.0	0.2	1.0	-0.9	86.94
		578	-0.9	1.0	0.2	1.0	-0.9	86.70
		577	-0.9	1.2	0.2	1.2	-0.9	89.09
	Min	Cent	-2.0	0.6	-0.0	0.6	-2.0	88.42
		570	-2.1	0.6	-0.0	0.7	-2.1	86.80
		571	-2.1	0.5	-0.0	0.5	-2.1	-89.45
		578	-1.9	0.5	-0.0	0.5	-1.9	-89.43
		577	-1.9	0.6	-0.0	0.7	-1.9	86.51

	NODE	Mxx	Myy	Mxy	Mmax	Mmin	ANGLE
Max	Cent	-3.0	-0.2	-0.4	-0.2	-3.2	-83.61
	570	-4.2	-0.1	-0.5	-0.0	-4.4	-84.10
	571	-2.5	0.1	-0.2	0.1	-2.6	-85.81
	578	-2.0	-0.5	-0.3	-0.4	-2.4	-82.47
	577	-3.5	-0.5	-0.6	-0.4	-3.8	-81.64
Min	Cent	-4.6	-3.5	-0.7	-3.0	-4.7	-56.81

570	-5.5	-3.3	-0.9	-3.0	-5.6	-67.24
571	-4.5	-3.3	-0.5	-3.0	-4.5	-62.59
578	-3.8	-3.7	-0.6	-3.0	-4.0	-40.90
577	-4.7	-3.6	-0.9	-2.9	-4.9	-53.41

	NODE	Vxx	Vyy
Max	Cent	-1.6	1.4
	570	-1.6	1.2
	571	-1.6	1.6
	578	-1.5	1.6
	577	-1.5	1.2
Min	Cent	-3.0	0.9
	570	-3.1	0.8
	571	-3.1	0.9
	578	-2.9	0.9
	577	-2.9	0.8

ELEM	MAT	SEC	LC		NODE	Fxx	Fyy	Fxy	Fmax	Fmin	ANGLE
536	1	1	SX	(RS)	Cent	1.4	0.6	0.5	1.7	0.4	24.39
					571	1.7	0.5	0.5	1.8	0.3	18.93
					572	1.7	0.8	0.5	1.9	0.6	23.23
					579	1.2	0.8	0.5	1.5	0.5	32.71
					578	1.2	0.5	0.5	1.4	0.3	25.78

	NODE	Mxx	Myy	Mxy	Mmax	Mmin	ANGLE
	Cent	4.0	0.7	0.2	4.0	0.7	3.58
	571	3.7	0.9	0.3	3.7	0.9	5.26
	572	4.5	1.0	0.2	4.6	1.0	3.69
	579	4.1	0.5	0.1	4.1	0.5	2.08
	578	3.7	0.7	0.2	3.7	0.6	3.05

	NODE	Vxx	Vyy
	Cent	1.4	0.7
	571	1.7	0.5
	572	1.7	1.0
	579	1.1	1.0
	578	1.1	0.5

LC		NODE	Fxx	Fyy	Fxy	Fmax	Fmin	ANGLE
SY	(RS)	Cent	0.3	0.1	2.2	2.4	-2.0	43.49
		571	0.5	0.1	2.2	2.6	-1.9	42.12
		572	0.5	0.3	2.2	2.6	-1.8	43.16
		579	0.1	0.3	2.2	2.4	-2.1	45.95
		578	0.1	0.1	2.2	2.3	-2.1	44.90

	NODE	Mxx	Myy	Mxy	Mmax	Mmin	ANGLE
	Cent	0.2	0.9	0.4	1.1	0.1	66.15
	571	0.4	1.0	0.3	1.1	0.3	69.36
	572	0.4	1.5	0.4	1.7	0.3	70.73
	579	0.1	0.7	0.5	0.9	-0.2	59.36
	578	0.1	0.5	0.3	0.7	-0.1	61.08

	NODE	Vxx	Vyy
	Cent	0.4	1.4
	571	0.6	1.1
	572	0.6	1.7
	579	0.2	1.7
	578	0.2	1.1

LC		NODE	Fxx	Fyy	Fxy	Fmax	Fmin	ANGLE
RC ENV~1	Max	Cent	0.5	1.2	2.4	2.5	0.1	52.55
		571	0.6	1.4	2.4	2.6	0.2	52.63
		572	0.6	1.3	2.4	2.6	0.2	52.20
		579	0.4	1.3	2.4	2.5	0.1	53.40
		578	0.4	1.4	2.4	2.5	0.0	53.83
	Min	Cent	-2.7	-0.1	-2.1	-0.0	-2.8	-82.71
		571	-3.1	0.2	-2.1	0.2	-3.1	-84.17
		572	-3.1	-0.4	-2.1	-0.3	-3.2	-82.88

579	-2.3	-0.4	-2.1	-0.3	-2.5	-80.27
578	-2.3	0.2	-2.1	0.2	-2.5	-82.51

	NODE	Mxx	Myy	Mxy	Mmax	Mmin	ANGLE
Max	Cent	2.3	0.7	0.5	2.3	0.5	6.05
	571	0.5	1.0	0.5	1.0	0.4	86.10
	572	4.1	1.7	0.9	4.1	1.2	7.50
	579	3.7	-0.0	0.5	3.7	-0.2	1.55
	578	1.0	0.2	0.1	1.0	0.2	-2.21
Min	Cent	-5.7	-5.4	-0.4	-3.5	-5.7	-79.50
	571	-6.9	-5.1	-0.3	-5.0	-6.9	-33.42
	572	-5.0	-4.8	-0.3	-2.4	-5.0	21.71
	579	-4.6	-5.9	-0.5	-2.0	-5.9	1.22
	578	-6.4	-5.6	-0.5	-4.0	-6.5	-6.99

	NODE	Vxx	Vyy
Max	Cent	-3.0	3.1
	571	-3.0	2.2
	572	-3.0	4.0
	579	-3.0	4.0
	578	-3.0	2.2
Min	Cent	-7.7	0.0
	571	-8.5	-0.0
	572	-8.5	0.1
	579	-6.8	0.1
	578	-6.8	-0.0

LC		NODE	Fxx	Fyy	Fxy	Fmax	Fmin	ANGLE
RC ENV~2	Max	Cent	-0.7	0.8	0.4	0.8	-0.7	85.82
		571	-0.7	1.0	0.4	1.0	-0.7	82.91
		572	-0.7	0.6	0.4	0.6	-0.7	85.68
		579	-0.7	0.6	0.4	0.6	-0.7	85.13
		578	-0.7	1.0	0.4	1.1	-0.7	81.53
	Min	Cent	-1.9	0.4	-0.0	0.4	-2.0	80.26
		571	-2.2	0.5	-0.0	0.5	-2.2	88.50
		572	-2.2	0.2	-0.0	0.2	-2.2	80.32
		579	-1.6	0.2	-0.0	0.2	-1.7	77.45
		578	-1.6	0.5	-0.0	0.5	-1.7	88.39

	NODE	Mxx	Myy	Mxy	Mmax	Mmin	ANGLE
Max	Cent	-0.6	-0.2	0.4	-0.2	-1.5	87.58
	571	-2.4	0.1	0.3	0.1	-2.4	88.97
	572	0.9	0.4	0.6	1.0	-0.3	13.70
	579	0.9	-0.7	0.3	1.0	-0.7	3.88
	578	-1.6	-0.4	0.0	-0.4	-1.9	-86.01
Min	Cent	-2.7	-3.4	-0.0	-2.2	-3.4	9.19
	571	-4.3	-3.3	-0.1	-3.3	-4.3	-85.22
	572	-1.7	-3.0	0.1	-1.6	-3.1	38.46
	579	-1.4	-3.9	-0.0	-1.4	-3.9	0.74
	578	-3.6	-3.6	-0.3	-3.0	-3.7	-17.04

	NODE	Vxx	Vyy
Max	Cent	-3.9	2.3
	571	-4.2	1.6
	572	-4.2	2.9
	579	-3.7	2.9
	578	-3.7	1.6
Min	Cent	-5.7	1.2
	571	-6.3	0.9
	572	-6.3	1.5
	579	-5.1	1.5
	578	-5.1	0.9

ELEM	MAT	SEC	LC		NODE	Fxx	Fyy	Fxy	Fmax	Fmin	ANGLE
537	1	1	SX (RS)		Cent	1.1	0.9	0.5	1.5	0.5	39.01
					572	1.1	0.8	0.5	1.5	0.4	34.36
					573	1.1	1.0	0.5	1.6	0.6	41.86
					580	1.1	1.0	0.5	1.5	0.6	44.20
					579	1.1	0.8	0.5	1.4	0.4	36.46

	NODE	Mxx	Myy	Mxy	Mmax	Mmin	ANGLE

Cent	4.3	0.7	0.1	4.3	0.7	2.32
572	4.8	1.0	0.1	4.8	1.0	2.23
573	4.5	0.8	0.2	4.5	0.7	3.49
580	4.0	0.7	0.2	4.0	0.6	4.19
579	4.2	0.5	0.1	4.2	0.5	1.15

NODE	Vxx	Vyy
Cent	0.6	0.5
572	0.6	1.0
573	0.6	0.1
580	0.6	0.1
579	0.6	1.0

LC	NODE	Fxx	Fyy	Fxy	Fmax	Fmin	ANGLE
SY (RS)	Cent	0.2	0.6	2.3	2.7	-1.9	47.39
	572	0.3	0.2	2.3	2.5	-2.0	44.49
	573	0.3	1.0	2.3	2.9	-1.7	49.24
	580	0.1	1.0	2.3	2.8	-1.7	50.12
	579	0.1	0.2	2.3	2.4	-2.1	45.40

NODE	Mxx	Myy	Mxy	Mmax	Mmin	ANGLE
Cent	0.3	1.2	0.7	1.6	-0.1	60.41
572	0.5	1.5	0.6	1.7	0.2	64.42
573	0.7	2.0	0.8	2.3	0.3	65.34
580	0.3	0.6	0.8	1.2	-0.4	50.92
579	0.1	0.7	0.6	1.1	-0.3	56.21

NODE	Vxx	Vyy
Cent	0.8	2.1
572	1.1	1.7
573	1.1	2.6
580	0.4	2.6
579	0.4	1.7

LC		NODE	Fxx	Fyy	Fxy	Fmax	Fmin	ANGLE
RC ENV~1	Max	Cent	0.4	1.3	2.4	2.8	0.0	53.72
		572	0.4	1.3	2.4	2.6	0.0	51.63
		573	0.4	1.4	2.4	3.0	0.1	55.06
		580	0.4	1.4	2.4	3.0	0.0	55.63
		579	0.4	1.3	2.4	2.6	-0.0	52.24
	Min	Cent	-2.0	-0.4	-2.1	-0.4	-2.6	-77.93
		572	-2.0	-0.3	-2.1	-0.2	-2.5	-79.61
		573	-2.0	-0.6	-2.1	-0.6	-2.9	-76.73
		580	-1.9	-0.6	-2.1	-0.6	-2.8	-75.59
		579	-1.9	-0.3	-2.1	-0.2	-2.4	-78.90

	NODE	Mxx	Myy	Mxy	Mmax	Mmin	ANGLE
Max	Cent	5.8	1.0	1.0	5.9	0.5	3.19
	572	4.7	1.8	1.2	4.7	1.3	7.28
	573	7.9	2.4	1.2	7.9	1.9	4.03
	580	6.8	-0.1	0.8	6.8	-0.1	1.89
	579	4.1	0.0	0.7	4.1	-0.1	1.38
Min	Cent	-2.8	-5.3	-0.6	-0.9	-5.4	89.93
	572	-4.8	-4.7	-0.3	-1.8	-4.9	27.17
	573	-1.1	-4.5	-0.5	-0.4	-4.6	88.27
	580	-1.1	-6.3	-0.8	-1.0	-6.4	-29.67
	579	-4.3	-5.8	-0.6	-1.5	-5.9	7.19

	NODE	Vxx	Vyy
Max	Cent	-5.0	4.2
	572	-5.1	4.0
	573	-5.1	4.6
	580	-4.7	4.6
	579	-4.7	4.0
Min	Cent	-9.0	-0.3
	572	-10.1	0.1
	573	-10.1	-0.6
	580	-7.9	-0.6
	579	-7.9	0.1

LC		NODE	Fxx	Fyy	Fxy	Fmax	Fmin	ANGLE
RC ENV~2	Max	Cent	-0.6	0.5	0.5	0.6	-0.6	76.89
		572	-0.6	0.7	0.5	0.7	-0.6	83.53
		573	-0.6	0.4	0.5	0.5	-0.6	79.27
		580	-0.6	0.4	0.5	0.5	-0.6	75.93
		579	-0.6	0.7	0.5	0.7	-0.6	83.39
	Min	Cent	-1.4	0.2	-0.0	0.2	-1.5	86.02
		572	-1.5	0.2	-0.0	0.3	-1.6	75.60
		573	-1.5	0.1	-0.0	0.1	-1.6	85.47
		580	-1.4	0.1	-0.0	0.1	-1.5	85.37
		579	-1.4	0.2	-0.0	0.3	-1.5	74.85

		NODE	Mxx	Myy	Mxy	Mmax	Mmin	ANGLE
	Max	Cent	3.2	-0.1	0.6	3.3	-0.2	5.42
		572	1.5	0.5	0.8	1.7	-0.0	14.85
		573	5.5	0.5	0.8	5.5	0.4	5.26
		580	4.6	-0.8	0.5	4.6	-0.8	1.83
		579	1.4	-0.6	0.4	1.5	-0.6	4.82
	Min	Cent	0.4	-3.4	0.1	0.4	-3.4	8.11
		572	-1.4	-2.9	0.3	-1.1	-3.1	33.65
		573	2.1	-2.7	0.2	2.2	-2.8	7.75
		580	1.8	-4.1	-0.0	1.8	-4.2	3.35
		579	-1.1	-3.8	0.0	-1.1	-3.8	7.30

		NODE	Vxx	Vyy
	Max	Cent	-5.7	3.0
		572	-6.2	2.9
		573	-6.2	3.1
		580	-5.3	3.1
		579	-5.3	2.9
	Min	Cent	-6.8	1.7
		572	-7.5	1.5
		573	-7.5	2.0
		580	-6.0	2.0
		579	-6.0	1.5

ELEM	MAT	SEC	LC		NODE	Fxx	Fyy	Fxy	Fmax	Fmin	ANGLE
538	1	1	SX (RS)		Cent	1.0	1.2	0.5	1.6	0.5	50.09
					573	1.3	1.0	0.5	1.7	0.6	37.68
					215	1.3	1.4	0.5	1.9	0.8	46.95
					218	0.7	1.4	0.5	1.7	0.4	60.71
					580	0.7	1.0	0.5	1.4	0.3	52.86

		NODE	Mxx	Myy	Mxy	Mmax	Mmin	ANGLE
		Cent	3.7	1.0	0.6	3.8	0.8	12.77
		573	4.2	0.7	0.6	4.3	0.6	9.47
		215	4.2	1.4	1.0	4.6	1.1	18.39
		218	2.7	1.3	0.7	3.0	0.9	22.94
		580	3.7	0.6	0.3	3.7	0.6	5.23

		NODE	Vxx	Vyy
		Cent	1.2	0.1
		573	0.4	0.1
		215	0.4	0.3
		218	2.1	0.3
		580	2.1	0.1

LC		NODE	Fxx	Fyy	Fxy	Fmax	Fmin	ANGLE
SY (RS)		Cent	0.4	1.1	1.7	2.5	-1.0	51.03
		573	0.7	0.9	1.7	2.5	-0.9	46.90
		215	0.7	1.3	1.7	2.7	-0.7	50.53
		218	0.1	1.3	1.7	2.5	-1.1	54.89
		580	0.1	0.9	1.7	2.3	-1.2	51.50

		NODE	Mxx	Myy	Mxy	Mmax	Mmin	ANGLE
		Cent	0.6	1.3	0.9	1.9	0.0	55.19
		573	0.9	2.0	0.9	2.5	0.4	61.82

		215	1.2	2.1	1.0	2.7	0.6	57.77
		218	0.3	0.5	0.9	1.3	-0.5	47.92
		580	0.2	0.6	0.8	1.2	-0.5	51.45

	NODE	Vxx	Vyy
	Cent	0.4	2.7
	573	0.6	2.6
	215	0.6	2.9
	218	0.4	2.9
	580	0.4	2.6

LC		NODE	Fxx	Fyy	Fxy	Fmax	Fmin	ANGLE
RC ENV~1	Max	Cent	0.4	1.6	1.9	2.8	0.0	57.17
		573	0.5	1.4	1.9	2.7	0.1	54.88
		215	0.5	1.8	1.9	3.0	0.2	57.66
		218	0.2	1.8	1.9	2.9	-0.1	59.27
		580	0.2	1.4	1.9	2.6	-0.1	56.63
	Min	Cent	-1.7	-0.7	-1.5	-0.6	-2.3	-70.27
		573	-2.2	-0.6	-1.5	-0.5	-2.5	-77.56
		215	-2.2	-0.9	-1.5	-0.8	-2.7	-74.09
		218	-1.2	-0.9	-1.5	-0.7	-2.3	-53.04
		580	-1.2	-0.6	-1.5	-0.4	-2.0	-64.90

		NODE	Mxx	Myy	Mxy	Mmax	Mmin	ANGLE
	Max	Cent	9.6	1.5	0.7	9.6	1.3	-0.29
		573	7.8	2.4	0.9	7.9	2.1	4.94
		215	13.8	3.3	0.7	13.8	3.2	-1.90
		218	10.3	1.0	0.6	10.3	1.0	-1.82
		580	6.7	-0.1	0.8	6.7	-0.1	2.02
	Min	Cent	1.4	-4.9	-1.1	1.7	-4.9	-18.21
		573	-0.6	-4.4	-0.9	0.2	-4.5	-52.29
		215	3.4	-3.4	-1.4	3.9	-3.4	-18.85
		218	3.6	-5.7	-1.3	3.8	-5.8	-11.77
		580	-0.6	-6.2	-0.9	-0.5	-6.3	-21.41

		NODE	Vxx	Vyy
	Max	Cent	-4.9	4.8
		573	-6.3	4.6
		215	-6.3	5.0
		218	-3.4	5.0
		580	-3.4	4.6
	Min	Cent	-8.8	-0.6
		573	-10.3	-0.6
		215	-10.3	-0.7
		218	-7.9	-0.7
		580	-7.9	-0.6

LC		NODE	Fxx	Fyy	Fxy	Fmax	Fmin	ANGLE
RC ENV~2	Max	Cent	-0.4	0.5	0.5	0.6	-0.4	73.76
		573	-0.4	0.4	0.5	0.5	-0.4	75.96
		215	-0.4	0.5	0.5	0.6	-0.4	75.61
		218	-0.4	0.5	0.5	0.7	-0.4	69.19
		580	-0.4	0.4	0.5	0.6	-0.4	69.92
	Min	Cent	-1.2	0.1	-0.0	0.1	-1.4	82.27
		573	-1.6	0.1	-0.0	0.2	-1.7	83.93
		215	-1.6	-0.0	-0.0	-0.0	-1.7	81.71
		218	-0.8	-0.0	-0.0	-0.0	-1.0	79.41
		580	-0.8	0.1	-0.0	0.2	-1.0	82.76

		NODE	Mxx	Myy	Mxy	Mmax	Mmin	ANGLE
	Max	Cent	7.0	0.2	0.4	7.0	0.2	-0.62
		573	5.7	0.5	0.6	5.7	0.5	1.08
		215	10.2	1.3	0.3	10.2	1.3	-2.19
		218	7.7	-0.1	0.3	7.7	-0.2	-2.16
		580	4.8	-0.7	0.5	4.8	-0.7	1.60
	Min	Cent	4.1	-3.0	-0.2	4.1	-3.1	2.73
		573	2.4	-2.7	-0.1	2.5	-2.7	5.82
		215	6.4	-2.0	-0.4	6.4	-2.0	1.93
		218	5.5	-3.7	-0.4	5.5	-3.7	1.02
		580	2.1	-4.1	-0.1	2.1	-4.1	3.58

	NODE	Vxx	Vyy
Max	Cent	-6.0	3.2
	573	-6.8	3.1
	215	-6.8	3.3
	218	-4.9	3.3
	580	-4.9	3.1
Min	Cent	-6.7	2.0
	573	-7.8	2.0
	215	-7.8	2.1
	218	-6.0	2.1
	580	-6.0	2.0

ELEM	MAT	SEC	LC	NODE	Fxx	Fyy	Fxy	Fmax	Fmin	ANGLE
539	1	1	SX (RS)	Cent	0.2	0.2	0.0	0.2	0.1	65.77
				528	0.2	0.0	0.0	0.2	0.0	9.90
				574	0.2	0.4	0.0	0.4	0.2	84.43
				581	0.2	0.4	0.0	0.4	0.2	84.42
				536	0.2	0.0	0.0	0.2	0.0	9.87

	NODE	Mxx	Myy	Mxy	Mmax	Mmin	ANGLE
	Cent	0.8	0.2	0.0	0.8	0.2	0.29
	528	0.0	0.0	0.1	0.2	-0.1	43.11
	574	1.5	0.5	0.1	1.5	0.5	7.42
	581	1.5	0.5	0.1	1.5	0.5	7.42
	536	0.0	0.0	0.1	0.2	-0.1	43.08

	NODE	Vxx	Vyy
	Cent	2.9	0.0
	528	2.9	0.0
	574	2.9	0.0
	581	2.9	0.0
	536	2.9	0.0

LC	NODE	Fxx	Fyy	Fxy	Fmax	Fmin	ANGLE
SY (RS)	Cent	0.0	0.1	0.6	0.6	-0.6	46.19
	528	0.3	0.1	0.6	0.8	-0.4	38.70
	574	0.3	0.1	0.6	0.8	-0.4	38.66
	581	0.3	0.1	0.6	0.8	-0.4	38.68
	536	0.3	0.1	0.6	0.8	-0.4	38.73

	NODE	Mxx	Myy	Mxy	Mmax	Mmin	ANGLE
	Cent	0.0	0.0	0.4	0.4	-0.4	45.00
	528	0.7	1.2	0.2	1.3	0.7	68.54
	574	0.4	1.0	0.6	1.4	0.1	59.32
	581	0.4	1.0	0.6	1.4	0.1	59.32
	536	0.7	1.2	0.2	1.3	0.7	68.54

	NODE	Vxx	Vyy
	Cent	0.0	3.9
	528	0.5	4.1
	574	0.5	3.7
	581	0.5	3.7
	536	0.5	4.1

LC		NODE	Fxx	Fyy	Fxy	Fmax	Fmin	ANGLE
RC ENV~1	Max	Cent	-0.8	1.9	0.6	1.9	-0.8	-89.92
		528	-0.7	1.9	0.6	1.9	-0.8	-89.92
		574	-0.7	1.9	0.6	1.9	-0.8	-89.90
		581	-0.7	1.9	0.6	1.9	-0.8	-89.90
		536	-0.7	1.9	0.6	1.9	-0.8	-89.92
	Min	Cent	-2.9	0.6	-0.6	0.6	-2.9	-89.16
		528	-2.9	0.8	-0.6	0.8	-2.9	-89.23
		574	-2.9	0.4	-0.6	0.4	-2.9	-89.06
		581	-2.9	0.4	-0.6	0.4	-2.9	-89.06
		536	-2.9	0.8	-0.6	0.8	-2.9	-89.23

	NODE	Mxx	Myy	Mxy	Mmax	Mmin	ANGLE

Max	Cent	2.0	-1.8	-0.6	3.0	-2.4	-19.15
	528	2.4	-0.7	-0.9	3.4	-1.4	-18.95
	574	1.5	-0.7	-0.5	2.5	-1.5	-20.46
	581	1.7	-1.0	-0.4	2.7	-1.5	-19.24
	536	2.4	-1.1	-0.8	3.3	-1.6	-17.98
Min	Cent	-2.1	-6.6	-3.9	-1.2	-8.4	-43.24
	528	-1.9	-6.4	-4.0	-1.1	-8.3	-31.85
	574	-3.1	-6.8	-3.8	-1.4	-8.6	-54.03
	581	-3.1	-6.7	-3.8	-1.6	-8.5	-51.94
	536	-2.0	-6.6	-4.0	-1.3	-8.4	-28.97

	NODE	Vxx	Vyy
Max	Cent	3.6	4.4
	528	3.7	4.7
	574	3.7	4.2
	581	3.5	4.2
	536	3.5	4.7
Min	Cent	-2.2	-3.4
	528	-2.1	-3.5
	574	-2.1	-3.2
	581	-2.2	-3.2
	536	-2.2	-3.5

LC		NODE	Fxx	Fyy	Fxy	Fmax	Fmin	ANGLE
RC ENV~2	Max	Cent	-0.7	1.4	-0.0	1.4	-0.7	-89.92
		528	-0.7	1.4	-0.0	1.4	-0.7	-89.92
		574	-0.7	1.4	-0.0	1.4	-0.7	-89.91
		581	-0.7	1.4	-0.0	1.4	-0.7	-89.91
		536	-0.7	1.4	-0.0	1.4	-0.7	-89.92
	Min	Cent	-2.0	0.7	-0.0	0.7	-2.0	-89.77
		528	-2.0	0.7	-0.0	0.7	-2.0	-89.80
		574	-2.0	0.8	-0.0	0.8	-2.0	-89.81
		581	-2.0	0.8	-0.0	0.8	-2.0	-89.81
		536	-2.0	0.7	-0.0	0.7	-2.0	-89.80

		NODE	Mxx	Myy	Mxy	Mmax	Mmin	ANGLE
	Max	Cent	1.1	-2.0	-1.0	1.8	-2.7	-19.73
		528	1.4	-1.9	-1.1	2.1	-2.6	-19.47
		574	0.8	-1.8	-1.1	1.5	-2.6	-21.36
		581	0.9	-2.0	-1.0	1.6	-2.7	-19.87
		536	1.4	-2.3	-1.0	2.1	-2.8	-18.28
	Min	Cent	-1.4	-4.5	-2.6	-0.6	-5.8	-37.10
		528	-1.2	-4.4	-2.7	-0.4	-5.7	-35.23
		574	-1.6	-4.6	-2.6	-0.6	-5.9	-42.77
		581	-1.6	-4.6	-2.6	-0.8	-5.8	-39.05
		536	-1.3	-4.6	-2.7	-0.7	-5.8	-31.55

	NODE	Vxx	Vyy
Max	Cent	1.4	0.5
	528	1.5	0.6
	574	1.5	0.5
	581	1.2	0.5
	536	1.2	0.6
Min	Cent	0.4	0.2
	528	0.6	0.3
	574	0.6	0.1
	581	0.3	0.1
	536	0.3	0.3

ELEM	MAT	SEC	LC		NODE	Fxx	Fyy	Fxy	Fmax	Fmin	ANGLE
540	1	1	SX (RS)		Cent	0.6	0.5	0.0	0.6	0.5	12.18
					574	0.6	0.5	0.0	0.6	0.5	9.54
					575	0.6	0.5	0.0	0.6	0.5	17.24
					582	0.6	0.5	0.0	0.6	0.5	17.17
					581	0.6	0.5	0.0	0.6	0.5	9.51

	NODE	Mxx	Myy	Mxy	Mmax	Mmin	ANGLE
	Cent	2.1	0.5	0.0	2.1	0.5	0.07
	574	1.8	0.4	0.0	1.8	0.4	1.78
	575	2.4	0.6	0.0	2.4	0.6	1.35
	582	2.4	0.6	0.0	2.4	0.6	1.35

```
                    581        1.8        0.4        0.0        1.8        0.4       1.77

                   NODE        Vxx        Vyy
             ---- ------ ---------- ----------
                   Cent        1.4        0.0
                    574        1.4        0.0
                    575        1.4        0.0
                    582        1.4        0.0
                    581        1.4        0.0


        LC        NODE        Fxx        Fyy        Fxy       Fmax       Fmin      ANGLE
-------- ---- ------ ---------- ---------- ---------- ---------- ---------- ----------
      SY (RS)   Cent        0.0        0.1        1.5        1.5       -1.5      45.47
                    574        0.1        0.1        1.5        1.6       -1.4      44.45
                    575        0.1        0.1        1.5        1.6       -1.4      44.42
                    582        0.1        0.1        1.5        1.6       -1.4      44.41
                    581        0.1        0.1        1.5        1.6       -1.4      44.44

                   NODE        Mxx        Myy        Mxy       Mmax       Mmin      ANGLE
             ---- ------ ---------- ---------- ---------- ---------- ---------- ----------
                   Cent        0.0        0.0        0.9        0.9       -0.9      45.00
                    574        0.5        1.1        0.8        1.6       -0.0      54.36
                    575        0.0        0.7        0.9        1.3       -0.6      55.61
                    582        0.0        0.7        0.9        1.3       -0.6      55.61
                    581        0.5        1.1        0.8        1.6       -0.0      54.36

                   NODE        Vxx        Vyy
             ---- ------ ---------- ----------
                   Cent        0.0        3.2
                    574        0.8        3.7
                    575        0.8        2.8
                    582        0.8        2.8
                    581        0.8        3.7


        LC        NODE        Fxx        Fyy        Fxy       Fmax       Fmin      ANGLE
-------- ---- ------ ---------- ---------- ---------- ---------- ---------- ----------
RC ENV~1  Max   Cent       -0.4        1.9        1.5        1.9       -0.4     -89.84
                    574       -0.4        1.9        1.5        1.9       -0.4     -89.85
                    575       -0.4        1.9        1.5        1.9       -0.4     -89.84
                    582       -0.4        1.9        1.5        1.9       -0.4     -89.84
                    581       -0.4        1.9        1.5        1.9       -0.4     -89.85
             Min   Cent       -2.8        0.3       -1.5        0.3       -2.8     -89.09
                    574       -2.8        0.4       -1.5        0.4       -2.8     -89.11
                    575       -2.8        0.3       -1.5        0.3       -2.8     -89.08
                    582       -2.8        0.3       -1.5        0.3       -2.8     -89.08
                    581       -2.8        0.4       -1.5        0.4       -2.8     -89.11

                   NODE        Mxx        Myy        Mxy       Mmax       Mmin      ANGLE
             ---- ------ ---------- ---------- ---------- ---------- ---------- ----------
             Max   Cent       -0.3       -1.2       -0.1        0.9       -1.8     -24.49
                    574        0.8       -0.8       -0.4        2.0       -1.5     -22.14
                    575       -0.5       -0.6       -0.2        0.5       -1.7     -42.73
                    582       -0.4       -0.8        0.1        0.2       -1.5     -37.36
                    581        1.1       -1.1       -0.1        1.9       -1.4     -18.25
             Min   Cent       -4.4       -6.5       -3.5       -1.8       -8.3     -68.87
                    574       -3.6       -6.8       -3.8       -1.6       -8.6     -59.67
                    575       -5.3       -6.5       -3.5       -1.6       -8.6     -72.40
                    582       -5.2       -6.2       -3.2       -1.9       -7.9     -75.19
                    581       -3.7       -6.7       -3.5       -2.0       -8.2     -60.87

                   NODE        Vxx        Vyy
             ---- ------ ---------- ----------
             Max   Cent        4.8        3.6
                    574        5.0        4.2
                    575        5.0        3.1
                    582        4.6        3.1
                    581        4.6        4.2
             Min   Cent        0.6       -2.8
                    574        0.6       -3.2
                    575        0.6       -2.4
                    582        0.5       -2.4
                    581        0.5       -3.2


        LC        NODE        Fxx        Fyy        Fxy       Fmax       Fmin      ANGLE
-------- ---- ------ ---------- ---------- ---------- ---------- ---------- ----------
RC ENV~2  Max   Cent       -0.9        1.4       -0.0        1.4       -0.9     -89.84
```

		574	-0.9	1.4	-0.0	1.4	-0.9	-89.85
		575	-0.9	1.4	-0.0	1.4	-0.9	-89.84
		582	-0.8	1.4	-0.0	1.4	-0.8	-89.84
		581	-0.8	1.4	-0.0	1.4	-0.8	-89.85
	Min	Cent	-2.0	0.7	-0.0	0.7	-2.0	-89.70
		574	-2.0	0.7	-0.0	0.7	-2.0	-89.66
		575	-2.0	0.7	-0.0	0.7	-2.0	-89.70
		582	-2.0	0.7	-0.0	0.7	-2.0	-89.69
		581	-2.0	0.7	-0.0	0.7	-2.0	-89.66

	NODE	Mxx	Myy	Mxy	Mmax	Mmin	ANGLE
Max	Cent	-0.5	-1.7	-1.0	0.3	-2.9	-26.29
	574	0.3	-1.8	-1.2	1.2	-2.9	-23.35
	575	-1.6	-1.3	-1.1	-0.2	-3.3	-35.71
	582	-1.3	-1.4	-0.8	-0.2	-3.0	-28.99
	581	0.4	-2.1	-0.8	1.0	-2.7	-19.04
Min	Cent	-2.4	-4.4	-2.4	-1.0	-5.8	-55.41
	574	-2.0	-4.7	-2.6	-0.7	-6.0	-46.45
	575	-2.9	-4.3	-2.4	-1.0	-5.9	-45.69
	582	-2.9	-4.2	-2.2	-1.2	-5.5	-49.24
	581	-2.0	-4.6	-2.3	-1.2	-5.7	-43.04

	NODE	Vxx	Vyy
Max	Cent	3.5	0.4
	574	3.6	0.5
	575	3.6	0.4
	582	3.3	0.4
	581	3.3	0.5
Min	Cent	1.8	-0.0
	574	1.9	0.1
	575	1.9	-0.1
	582	1.7	-0.1
	581	1.7	0.1

ELEM	MAT	SEC	LC	NODE	Fxx	Fyy	Fxy	Fmax	Fmin	ANGLE
541	1	1	SX (RS)	Cent	0.9	0.5	0.0	0.9	0.5	3.26
				575	0.9	0.6	0.0	0.9	0.6	3.59
				576	0.9	0.5	0.0	0.9	0.5	3.00
				583	0.9	0.5	0.0	0.9	0.5	3.00
				582	0.9	0.6	0.0	0.9	0.6	3.58

	NODE	Mxx	Myy	Mxy	Mmax	Mmin	ANGLE
	Cent	2.4	0.6	0.0	2.4	0.6	0.03
	575	2.3	0.6	0.1	2.3	0.6	2.16
	576	2.6	0.6	0.1	2.6	0.6	1.83
	583	2.6	0.6	0.1	2.6	0.6	1.83
	582	2.3	0.6	0.1	2.3	0.6	2.16

	NODE	Vxx	Vyy
	Cent	1.4	0.0
	575	1.4	0.0
	576	1.4	0.0
	583	1.4	0.0
	582	1.4	0.0

LC	NODE	Fxx	Fyy	Fxy	Fmax	Fmin	ANGLE
SY (RS)	Cent	0.0	0.1	1.8	1.9	-1.8	45.37
	575	0.1	0.1	1.8	1.9	-1.8	44.93
	576	0.1	0.0	1.8	1.9	-1.8	44.91
	583	0.1	0.0	1.8	1.9	-1.8	44.87
	582	0.1	0.1	1.8	1.9	-1.8	44.89

	NODE	Mxx	Myy	Mxy	Mmax	Mmin	ANGLE
	Cent	0.0	0.0	0.7	0.7	-0.7	45.00
	575	0.1	0.7	0.8	1.3	-0.5	56.47
	576	0.2	0.4	0.6	0.9	-0.3	49.88
	583	0.2	0.4	0.6	0.9	-0.3	49.88
	582	0.1	0.7	0.8	1.3	-0.5	56.47

	NODE	Vxx	Vyy

		Cent	0.0	2.3
		575	0.4	2.8
		576	0.4	1.8
		583	0.4	1.8
		582	0.4	2.8

LC		NODE	Fxx	Fyy	Fxy	Fmax	Fmin	ANGLE
RC ENV~1	Max	Cent	-0.1	1.8	1.8	2.0	-0.1	58.72
		575	-0.1	1.9	1.8	2.0	-0.1	58.44
		576	-0.1	1.8	1.8	2.0	-0.1	58.29
		583	-0.1	1.8	1.8	2.0	-0.1	58.25
		582	-0.1	1.9	1.8	2.0	-0.1	58.40
	Min	Cent	-2.7	0.3	-1.8	0.3	-2.7	-89.20
		575	-2.7	0.3	-1.8	0.3	-2.7	-89.20
		576	-2.7	0.3	-1.8	0.3	-2.7	-89.21
		583	-2.7	0.3	-1.8	0.3	-2.7	-89.21
		582	-2.7	0.3	-1.8	0.3	-2.7	-89.19

		NODE	Mxx	Myy	Mxy	Mmax	Mmin	ANGLE
	Max	Cent	-1.3	-0.7	-0.2	-0.0	-1.9	-54.22
		575	-1.0	-0.7	-0.3	0.1	-1.9	-48.76
		576	-1.5	-0.4	-0.4	0.1	-2.0	-61.17
		583	-1.4	-0.5	-0.1	-0.1	-1.8	-61.84
		582	-0.9	-0.9	-0.0	-0.2	-1.7	-45.18
	Min	Cent	-6.1	-6.2	-2.8	-2.1	-8.1	-42.32
		575	-5.7	-6.6	-3.2	-1.9	-8.5	-44.44
		576	-6.7	-6.3	-2.8	-2.8	-8.5	-38.36
		583	-6.5	-5.8	-2.5	-2.5	-7.6	-47.75
		582	-5.6	-6.3	-2.9	-2.0	-7.8	-76.27

		NODE	Vxx	Vyy
	Max	Cent	4.5	2.6
		575	4.6	3.1
		576	4.6	2.1
		583	4.3	2.1
		582	4.3	3.1
	Min	Cent	0.0	-2.0
		575	0.1	-2.4
		576	0.1	-1.5
		583	-0.0	-1.5
		582	-0.0	-2.4

LC		NODE	Fxx	Fyy	Fxy	Fmax	Fmin	ANGLE
RC ENV~2	Max	Cent	-1.0	1.3	-0.0	1.3	-1.0	-89.81
		575	-1.0	1.4	-0.0	1.4	-1.0	-89.81
		576	-1.0	1.3	-0.0	1.3	-1.0	-89.81
		583	-1.0	1.3	-0.0	1.3	-1.0	-89.81
		582	-1.0	1.4	-0.0	1.4	-1.0	-89.81
	Min	Cent	-2.0	0.7	-0.0	0.7	-2.0	-89.59
		575	-2.0	0.7	-0.0	0.7	-2.0	-89.60
		576	-2.0	0.7	-0.0	0.7	-2.0	-89.59
		583	-2.0	0.7	-0.0	0.7	-2.0	-89.59
		582	-2.0	0.7	-0.0	0.7	-2.0	-89.60

		NODE	Mxx	Myy	Mxy	Mmax	Mmin	ANGLE
	Max	Cent	-2.8	-1.2	-0.9	-0.9	-3.9	-71.73
		575	-2.3	-1.4	-1.0	-0.8	-3.7	-38.85
		576	-3.8	-0.9	-1.0	-0.6	-4.4	-74.11
		583	-3.1	-1.0	-0.7	-0.8	-4.1	-76.82
		582	-1.9	-1.5	-0.8	-0.8	-3.4	-29.81
	Min	Cent	-3.7	-4.2	-1.9	-1.6	-5.6	-47.36
		575	-3.4	-4.4	-2.2	-1.4	-5.9	-48.31
		576	-4.1	-4.1	-2.0	-2.1	-5.9	-43.07
		583	-4.0	-3.9	-1.7	-1.8	-5.3	-53.83
		582	-3.3	-4.2	-2.0	-1.5	-5.4	-53.55

		NODE	Vxx	Vyy
	Max	Cent	3.2	0.3
		575	3.2	0.4
		576	3.2	0.3

		583	3.1	0.3	
		582	3.1	0.4	
	Min	Cent	1.1	-0.2	
		575	1.2	-0.1	
		576	1.2	-0.3	
		583	1.0	-0.3	
		582	1.0	-0.1	

ELEM	MAT	SEC	LC		NODE	Fxx	Fyy	Fxy	Fmax	Fmin	ANGLE
542	1	1	SX (RS)		Cent	1.2	0.5	0.0	1.2	0.5	1.74
					576	1.2	0.5	0.0	1.2	0.5	1.87
					577	1.2	0.4	0.0	1.2	0.4	1.64
					584	1.2	0.4	0.0	1.2	0.4	1.64
					583	1.2	0.5	0.0	1.2	0.5	1.87

	NODE	Mxx	Myy	Mxy	Mmax	Mmin	ANGLE
	Cent	2.6	0.6	0.0	2.6	0.6	0.02
	576	2.5	0.6	0.1	2.5	0.6	1.75
	577	2.9	0.6	0.1	2.9	0.6	1.43
	584	2.9	0.6	0.1	2.9	0.6	1.44
	583	2.5	0.6	0.1	2.5	0.6	1.75

	NODE	Vxx	Vyy
	Cent	1.8	0.0
	576	1.8	0.0
	577	1.8	0.0
	584	1.8	0.0
	583	1.8	0.0

LC		NODE	Fxx	Fyy	Fxy	Fmax	Fmin	ANGLE
SY (RS)		Cent	0.0	0.0	1.9	1.9	-1.9	45.34
		576	0.1	0.0	1.9	2.0	-1.8	44.54
		577	0.1	0.0	1.9	2.0	-1.8	44.52
		584	0.1	0.0	1.9	2.0	-1.8	44.49
		583	0.1	0.0	1.9	2.0	-1.8	44.51

	NODE	Mxx	Myy	Mxy	Mmax	Mmin	ANGLE
	Cent	0.0	0.0	0.3	0.3	-0.3	45.00
	576	0.1	0.5	0.4	0.7	-0.2	56.80
	577	0.2	0.3	0.2	0.5	0.0	51.01
	584	0.2	0.3	0.2	0.5	0.0	51.01
	583	0.1	0.5	0.4	0.7	-0.2	56.80

	NODE	Vxx	Vyy
	Cent	0.0	1.5
	576	0.1	1.8
	577	0.1	1.3
	584	0.1	1.3
	583	0.1	1.8

LC		NODE	Fxx	Fyy	Fxy	Fmax	Fmin	ANGLE
RC ENV~1	Max	Cent	0.2	1.7	1.9	2.0	0.2	58.01
		576	0.2	1.8	1.9	2.1	0.2	57.57
		577	0.2	1.6	1.9	2.0	0.2	57.15
		584	0.2	1.6	1.9	2.0	0.2	57.10
		583	0.2	1.8	1.9	2.1	0.2	57.52
	Min	Cent	-2.7	0.3	-1.9	0.3	-2.7	-89.36
		576	-2.7	0.3	-1.9	0.3	-2.7	-89.35
		577	-2.7	0.3	-1.9	0.3	-2.7	-89.36
		584	-2.7	0.3	-1.9	0.3	-2.7	-89.36
		583	-2.7	0.3	-1.9	0.3	-2.7	-89.35

	NODE	Mxx	Myy	Mxy	Mmax	Mmin	ANGLE
	Max	Cent	-1.6	-0.3	-0.4	0.0	-1.9	-64.90
		576	-1.9	-0.4	-0.4	-0.1	-2.2	-67.03
		577	-1.4	-0.2	-0.5	0.1	-1.7	-65.24
		584	-1.2	-0.2	-0.5	0.1	-1.5	-63.69
		583	-1.8	-0.5	-0.3	-0.2	-2.1	-65.98

Min	Cent	-6.9	-6.1	-2.0	-3.4	-7.6	-40.26
	576	-6.8	-6.3	-2.3	-3.4	-8.1	-38.21
	577	-7.1	-6.3	-1.9	-4.1	-7.9	-44.40
	584	-6.9	-5.7	-1.8	-3.4	-7.1	-40.36
	583	-6.7	-5.9	-2.2	-2.8	-7.4	-50.32

	NODE	Vxx	Vyy
Max	Cent	1.7	1.8
	576	1.7	2.1
	577	1.7	1.5
	584	1.6	1.5
	583	1.6	2.1
Min	Cent	-2.0	-1.3
	576	-2.0	-1.5
	577	-2.0	-1.1
	584	-2.0	-1.1
	583	-2.0	-1.5

LC		NODE	Fxx	Fyy	Fxy	Fmax	Fmin	ANGLE
RC ENV~2	Max	Cent	-1.0	1.2	-0.0	1.2	-1.0	-89.80
		576	-1.0	1.3	-0.0	1.3	-1.0	-89.81
		577	-1.0	1.1	-0.0	1.1	-1.0	-89.79
		584	-1.0	1.1	-0.0	1.1	-1.0	-89.79
		583	-1.0	1.3	-0.0	1.3	-1.0	-89.81
	Min	Cent	-1.9	0.7	-0.0	0.7	-1.9	-89.50
		576	-2.0	0.7	-0.0	0.7	-2.0	-89.51
		577	-2.0	0.6	-0.0	0.6	-2.0	-89.50
		584	-1.9	0.6	-0.0	0.6	-1.9	-89.50
		583	-1.9	0.7	-0.0	0.7	-1.9	-89.51

	NODE	Mxx	Myy	Mxy	Mmax	Mmin	ANGLE
Max	Cent	-3.5	-0.9	-0.8	-0.7	-4.3	-77.94
	576	-4.0	-0.9	-0.8	-0.7	-4.5	-77.10
	577	-3.7	-0.7	-0.7	-0.6	-4.3	-78.47
	584	-3.1	-0.8	-0.7	-0.6	-3.9	-78.89
	583	-3.3	-1.0	-0.7	-0.9	-4.4	-77.40
Min	Cent	-4.4	-4.0	-1.4	-2.5	-5.4	-43.74
	576	-4.4	-4.2	-1.6	-2.6	-5.7	-44.17
	577	-4.8	-4.1	-1.3	-2.9	-5.6	-47.24
	584	-4.4	-3.8	-1.3	-2.5	-5.0	-47.70
	583	-4.3	-3.9	-1.5	-2.1	-5.2	-40.76

	NODE	Vxx	Vyy
Max	Cent	0.9	0.2
	576	1.0	0.3
	577	1.0	0.2
	584	0.9	0.2
	583	0.9	0.3
Min	Cent	-0.7	-0.3
	576	-0.7	-0.3
	577	-0.7	-0.4
	584	-0.7	-0.4
	583	-0.7	-0.3

ELEM	MAT	SEC	LC		NODE	Fxx	Fyy	Fxy	Fmax	Fmin	ANGLE
543	1	1	SX	(RS)	Cent	1.4	0.5	0.0	1.4	0.5	1.59
					577	1.4	0.4	0.0	1.4	0.4	1.48
					578	1.4	0.6	0.0	1.4	0.6	1.75
					585	1.4	0.6	0.0	1.4	0.6	1.75
					584	1.4	0.4	0.0	1.4	0.4	1.48

NODE	Mxx	Myy	Mxy	Mmax	Mmin	ANGLE
Cent	3.2	0.6	0.0	3.2	0.6	0.04
577	2.9	0.7	0.0	2.9	0.6	1.13
578	3.6	0.6	0.0	3.6	0.6	0.87
585	3.6	0.6	0.0	3.6	0.6	0.89
584	2.9	0.7	0.0	2.9	0.6	1.15

NODE	Vxx	Vyy
Cent	1.7	0.0

	577	1.7	0.0	
	578	1.7	0.0	
	585	1.7	0.0	
	584	1.7	0.0	

LC		NODE	Fxx	Fyy	Fxy	Fmax	Fmin	ANGLE
SY (RS)		Cent	0.0	0.0	2.0	2.1	-2.0	45.30
		577	0.2	0.0	2.0	2.1	-1.9	44.27
		578	0.2	0.0	2.0	2.1	-1.9	44.25
		585	0.2	0.0	2.0	2.1	-1.9	44.22
		584	0.2	0.0	2.0	2.1	-1.9	44.24

		NODE	Mxx	Myy	Mxy	Mmax	Mmin	ANGLE
		Cent	0.0	0.0	0.1	0.1	-0.1	44.99
		577	0.1	0.3	0.1	0.3	0.1	72.17
		578	0.2	0.3	0.2	0.4	0.1	57.71
		585	0.2	0.3	0.2	0.4	0.1	57.71
		584	0.1	0.3	0.1	0.3	0.1	72.17

		NODE	Vxx	Vyy
		Cent	0.0	1.3
		577	0.1	1.3
		578	0.1	1.3
		585	0.1	1.3
		584	0.1	1.3

LC		NODE	Fxx	Fyy	Fxy	Fmax	Fmin	ANGLE
RC ENV~1	Max	Cent	0.4	1.4	2.0	2.1	0.4	56.36
		577	0.4	1.6	2.0	2.2	0.4	55.96
		578	0.4	1.2	2.0	2.1	0.4	54.98
		585	0.4	1.2	2.0	2.1	0.4	54.93
		584	0.4	1.6	2.0	2.2	0.4	55.92
	Min	Cent	-2.7	0.2	-2.0	0.2	-2.7	-89.41
		577	-2.7	0.3	-2.0	0.3	-2.7	-89.44
		578	-2.7	0.0	-2.0	0.0	-2.7	-89.37
		585	-2.7	0.0	-2.0	0.0	-2.7	-89.37
		584	-2.7	0.3	-2.0	0.3	-2.7	-89.44

		NODE	Mxx	Myy	Mxy	Mmax	Mmin	ANGLE
	Max	Cent	-0.3	-0.2	-0.5	0.3	-0.8	-47.51
		577	-1.3	-0.2	-0.5	0.1	-1.5	-68.17
		578	0.6	-0.2	-0.3	0.8	-0.4	-25.59
		585	0.7	-0.2	-0.4	1.0	-0.5	-24.20
		584	-1.1	-0.2	-0.6	0.1	-1.5	-63.05
	Min	Cent	-6.8	-6.0	-1.2	-3.9	-6.8	-33.16
		577	-7.2	-6.3	-1.4	-4.6	-7.3	-43.54
		578	-6.6	-6.3	-1.0	-4.2	-6.7	-25.36
		585	-6.4	-5.8	-1.1	-3.2	-6.5	-49.57
		584	-7.0	-5.7	-1.5	-3.6	-7.1	-39.16

		NODE	Vxx	Vyy
	Max	Cent	-0.5	1.5
		577	-0.5	1.5
		578	-0.5	1.5
		585	-0.5	1.5
		584	-0.5	1.5
	Min	Cent	-3.9	-1.1
		577	-3.9	-1.1
		578	-3.9	-1.2
		585	-3.9	-1.2
		584	-3.9	-1.1

LC		NODE	Fxx	Fyy	Fxy	Fmax	Fmin	ANGLE
RC ENV~2	Max	Cent	-0.9	1.0	-0.0	1.0	-0.9	-89.78
		577	-0.9	1.2	-0.0	1.2	-0.9	-89.79
		578	-0.9	0.9	-0.0	0.9	-0.9	-89.77
		585	-0.9	0.9	-0.0	0.9	-0.9	-89.77
		584	-0.9	1.2	-0.0	1.2	-0.9	-89.79
	Min	Cent	-1.9	0.5	-0.0	0.5	-1.9	-89.39

577	-1.9	0.6	-0.0	0.6	-1.9	-89.43
578	-1.9	0.4	-0.0	0.4	-1.9	-89.35
585	-1.9	0.4	-0.0	0.4	-1.9	-89.34
584	-1.9	0.6	-0.0	0.6	-1.9	-89.43

	NODE	Mxx	Myy	Mxy	Mmax	Mmin	ANGLE
Max	Cent	-2.6	-0.7	-0.6	-0.6	-3.3	-78.37
	577	-3.6	-0.7	-0.6	-0.6	-4.0	-80.86
	578	-2.0	-0.7	-0.5	-0.6	-2.9	-77.79
	585	-1.6	-0.7	-0.6	-0.6	-2.8	-74.45
	584	-3.0	-0.8	-0.7	-0.6	-3.7	-78.77
Min	Cent	-4.1	-4.0	-0.9	-2.8	-4.6	-42.49
	577	-4.8	-4.1	-1.0	-3.2	-5.2	-47.60
	578	-3.9	-4.1	-0.7	-3.0	-4.5	-34.34
	585	-3.5	-3.8	-0.8	-2.4	-4.2	-31.01
	584	-4.3	-3.8	-1.1	-2.6	-4.8	-42.68

	NODE	Vxx	Vyy
Max	Cent	-1.5	0.2
	577	-1.5	0.2
	578	-1.5	0.2
	585	-1.5	0.2
	584	-1.5	0.2
Min	Cent	-2.8	-0.4
	577	-2.9	-0.4
	578	-2.9	-0.4
	585	-2.8	-0.4
	584	-2.8	-0.4

ELEM	MAT	SEC	LC	NODE	Fxx	Fyy	Fxy	Fmax	Fmin	ANGLE
544	1	1	SX (RS)	Cent	1.2	0.7	0.0	1.2	0.7	2.45
				578	1.2	0.6	0.0	1.2	0.6	2.02
				579	1.2	0.8	0.0	1.2	0.8	3.12
				586	1.2	0.8	0.0	1.2	0.8	3.13
				585	1.2	0.6	0.0	1.2	0.6	2.02

NODE	Mxx	Myy	Mxy	Mmax	Mmin	ANGLE
Cent	3.9	0.6	0.0	3.9	0.6	0.07
578	3.7	0.6	0.0	3.7	0.6	0.83
579	4.2	0.6	0.0	4.2	0.6	0.71
586	4.2	0.6	0.0	4.2	0.6	0.75
585	3.7	0.6	0.0	3.7	0.6	0.86

NODE	Vxx	Vyy
Cent	1.1	0.0
578	1.1	0.0
579	1.1	0.0
586	1.1	0.0
585	1.1	0.0

LC	NODE	Fxx	Fyy	Fxy	Fmax	Fmin	ANGLE
SY (RS)	Cent	0.0	0.0	2.2	2.2	-2.2	45.26
	578	0.1	0.0	2.2	2.3	-2.1	44.64
	579	0.1	0.0	2.2	2.3	-2.1	44.62
	586	0.1	0.0	2.2	2.3	-2.1	44.60
	585	0.1	0.0	2.2	2.3	-2.1	44.62

NODE	Mxx	Myy	Mxy	Mmax	Mmin	ANGLE
Cent	0.0	0.0	0.4	0.4	-0.4	45.00
578	0.2	0.3	0.4	0.6	-0.1	51.20
579	0.2	0.5	0.5	0.9	-0.2	53.20
586	0.2	0.5	0.5	0.9	-0.2	53.21
585	0.2	0.3	0.4	0.6	-0.1	51.20

NODE	Vxx	Vyy
Cent	0.0	1.6
578	0.2	1.3
579	0.2	1.8
586	0.2	1.8

		585	0.2	1.3			

LC		NODE	Fxx	Fyy	Fxy	Fmax	Fmin	ANGLE
RC ENV~1	Max	Cent	0.4	1.2	2.2	2.2	0.4	54.00
		578	0.4	1.3	2.2	2.3	0.4	53.92
		579	0.4	1.3	2.2	2.2	0.4	52.94
		586	0.4	1.3	2.2	2.2	0.4	52.91
		585	0.4	1.3	2.2	2.3	0.4	53.89
	Min	Cent	-2.3	-0.1	-2.2	-0.1	-2.5	-89.31
		578	-2.3	0.1	-2.2	0.1	-2.5	-89.38
		579	-2.3	-0.3	-2.2	-0.3	-2.6	-89.24
		586	-2.3	-0.3	-2.2	-0.3	-2.6	-89.24
		585	-2.3	0.1	-2.2	0.1	-2.5	-89.38

		NODE	Mxx	Myy	Mxy	Mmax	Mmin	ANGLE
	Max	Cent	2.4	-0.2	0.0	2.5	-0.3	-9.28
		578	1.0	-0.1	-0.0	1.1	-0.2	-15.63
		579	3.7	-0.2	0.2	3.7	-0.2	-3.70
		586	3.8	-0.3	0.0	3.9	-0.3	-6.34
		585	1.1	-0.1	-0.2	1.3	-0.3	-19.97
	Min	Cent	-5.5	-6.1	-0.9	-2.9	-6.1	-24.32
		578	-6.5	-6.3	-0.7	-4.1	-6.5	-13.07
		579	-4.6	-6.4	-0.8	-2.1	-6.4	-7.04
		586	-4.5	-5.9	-1.0	-1.5	-6.0	-11.13
		585	-6.3	-5.7	-0.9	-3.3	-6.4	-47.10

		NODE	Vxx	Vyy
	Max	Cent	-3.0	1.7
		578	-3.0	1.5
		579	-3.0	1.9
		586	-3.0	1.9
		585	-3.0	1.5
	Min	Cent	-6.7	-1.4
		578	-6.8	-1.2
		579	-6.8	-1.7
		586	-6.6	-1.7
		585	-6.6	-1.2

LC		NODE	Fxx	Fyy	Fxy	Fmax	Fmin	ANGLE
RC ENV~2	Max	Cent	-0.7	0.8	0.0	0.8	-0.7	-89.72
		578	-0.7	0.9	0.0	0.9	-0.7	-89.74
		579	-0.7	0.6	0.0	0.6	-0.7	-89.70
		586	-0.7	0.6	0.0	0.6	-0.7	-89.70
		585	-0.7	0.9	0.0	0.9	-0.7	-89.74
	Min	Cent	-1.7	0.3	-0.0	0.3	-1.7	-89.10
		578	-1.7	0.4	-0.0	0.4	-1.7	-89.18
		579	-1.7	0.2	-0.0	0.2	-1.7	-89.02
		586	-1.7	0.2	-0.0	0.2	-1.7	-89.01
		585	-1.7	0.4	-0.0	0.4	-1.7	-89.17

		NODE	Mxx	Myy	Mxy	Mmax	Mmin	ANGLE
	Max	Cent	-0.2	-0.7	-0.4	-0.2	-1.6	-10.04
		578	-1.7	-0.6	-0.3	-0.6	-2.5	-80.17
		579	0.9	-0.8	-0.1	0.9	-0.9	-2.72
		586	1.3	-0.8	-0.4	1.3	-1.1	-7.31
		585	-1.3	-0.7	-0.6	-0.5	-2.5	-73.07
	Min	Cent	-2.3	-4.0	-0.4	-2.1	-4.0	-34.88
		578	-3.6	-4.1	-0.4	-3.0	-4.2	-20.96
		579	-1.5	-4.2	-0.3	-1.4	-4.2	-9.75
		586	-1.1	-3.9	-0.5	-1.0	-3.9	-14.27
		585	-3.2	-3.8	-0.7	-2.3	-4.0	-24.46

		NODE	Vxx	Vyy
	Max	Cent	-3.6	0.1
		578	-3.7	0.2
		579	-3.7	0.1
		586	-3.6	0.1
		585	-3.6	0.2
	Min	Cent	-5.0	-0.4
		578	-5.1	-0.4
		579	-5.1	-0.3

586	-5.0	-0.3	
585	-5.0	-0.4	

ELEM	MAT	SEC	LC	NODE	Fxx	Fyy	Fxy	Fmax	Fmin	ANGLE
545	1	1	SX (RS)	Cent	1.1	0.9	0.0	1.1	0.9	8.00
				579	1.1	0.8	0.0	1.1	0.8	4.24
				580	1.1	1.1	0.0	1.1	1.0	39.52
				587	1.1	1.1	0.0	1.1	1.0	39.58
				586	1.1	0.8	0.0	1.1	0.8	4.24

	NODE	Mxx	Myy	Mxy	Mmax	Mmin	ANGLE
	Cent	4.1	0.7	0.0	4.1	0.7	0.10
	579	4.2	0.6	0.1	4.2	0.6	0.85
	580	4.0	0.8	0.1	4.0	0.8	0.98
	587	4.0	0.8	0.0	4.0	0.8	0.87
	586	4.2	0.6	0.0	4.2	0.6	0.77

	NODE	Vxx	Vyy
	Cent	0.6	0.0
	579	0.6	0.0
	580	0.6	0.0
	587	0.6	0.0
	586	0.6	0.0

LC		NODE	Fxx	Fyy	Fxy	Fmax	Fmin	ANGLE
SY (RS)		Cent	0.0	0.0	2.1	2.2	-2.1	45.25
		579	0.1	0.0	2.1	2.2	-2.0	44.38
		580	0.1	0.0	2.1	2.2	-2.0	44.36
		587	0.1	0.0	2.1	2.2	-2.0	44.36
		586	0.1	0.0	2.1	2.2	-2.0	44.39

	NODE	Mxx	Myy	Mxy	Mmax	Mmin	ANGLE
	Cent	0.0	0.0	0.7	0.7	-0.7	45.00
	579	0.2	0.5	0.7	1.0	-0.4	51.36
	580	0.3	0.7	0.8	1.3	-0.3	51.50
	587	0.3	0.7	0.8	1.3	-0.3	51.50
	586	0.2	0.5	0.7	1.0	-0.4	51.37

	NODE	Vxx	Vyy
	Cent	0.0	2.0
	579	0.4	1.8
	580	0.4	2.3
	587	0.4	2.3
	586	0.4	1.8

LC		NODE	Fxx	Fyy	Fxy	Fmax	Fmin	ANGLE
RC ENV~1	Max	Cent	0.4	1.3	2.1	2.1	0.4	52.63
		579	0.4	1.3	2.1	2.2	0.4	52.25
		580	0.4	1.4	2.1	2.1	0.4	51.37
		587	0.4	1.4	2.1	2.1	0.4	51.37
		586	0.4	1.3	2.1	2.2	0.4	52.25
	Min	Cent	-1.9	-0.5	-2.1	-0.5	-2.4	-89.11
		579	-1.9	-0.3	-2.1	-0.3	-2.4	-89.24
		580	-1.9	-0.7	-2.1	-0.7	-2.5	-88.94
		587	-1.9	-0.7	-2.1	-0.7	-2.5	-88.94
		586	-1.9	-0.3	-2.1	-0.3	-2.4	-89.24

	NODE	Mxx	Myy	Mxy	Mmax	Mmin	ANGLE
Max	Cent	5.5	-0.0	0.4	5.5	-0.0	-3.18
	579	4.1	-0.2	0.4	4.1	-0.2	-2.54
	580	6.8	0.2	0.6	6.8	0.2	-1.15
	587	6.9	0.1	0.4	7.0	0.1	-2.84
	586	4.2	-0.2	0.2	4.2	-0.2	-5.06
Min	Cent	-2.7	-6.1	-1.0	-1.4	-6.1	-76.38
	579	-4.3	-6.3	-0.9	-1.7	-6.3	-0.89
	580	-1.2	-6.3	-1.0	-1.0	-6.4	-27.40
	587	-1.1	-6.0	-1.2	-0.8	-6.0	-30.45
	586	-4.2	-5.8	-1.1	-1.3	-5.8	-80.44

	NODE	Vxx	Vyy
Max	Cent	-4.6	2.2
	579	-4.7	1.9
	580	-4.7	2.4
	587	-4.6	2.4
	586	-4.6	1.9
Min	Cent	-7.8	-1.9
	579	-7.9	-1.7
	580	-7.9	-2.2
	587	-7.7	-2.2
	586	-7.7	-1.7

LC		NODE	Fxx	Fyy	Fxy	Fmax	Fmin	ANGLE
RC ENV~2	Max	Cent	-0.6	0.5	0.0	0.5	-0.6	-89.65
		579	-0.6	0.6	0.0	0.6	-0.6	-89.68
		580	-0.6	0.4	0.0	0.4	-0.6	89.91
		587	-0.6	0.4	0.0	0.4	-0.6	89.91
		586	-0.6	0.6	0.0	0.6	-0.6	-89.68
	Min	Cent	-1.4	0.2	-0.0	0.2	-1.4	-88.81
		579	-1.4	0.2	-0.0	0.2	-1.4	-88.92
		580	-1.4	0.1	-0.0	0.1	-1.4	-88.71
		587	-1.4	0.1	-0.0	0.1	-1.4	-88.69
		586	-1.4	0.2	-0.0	0.2	-1.4	-88.90

	NODE	Mxx	Myy	Mxy	Mmax	Mmin	ANGLE
Max	Cent	3.1	-0.7	0.0	3.1	-0.7	-1.24
	579	1.4	-0.7	0.1	1.4	-0.8	-0.92
	580	4.6	-0.6	0.2	4.6	-0.6	0.47
	587	4.9	-0.7	0.0	4.9	-0.7	-1.44
	586	1.7	-0.8	-0.2	1.8	-0.9	-4.21
Min	Cent	0.5	-4.0	-0.3	0.5	-4.0	-2.20
	579	-1.1	-4.1	-0.2	-1.1	-4.1	-2.67
	580	1.8	-4.1	-0.2	1.8	-4.1	0.58
	587	2.1	-3.9	-0.4	2.1	-3.9	-2.09
	586	-0.8	-3.8	-0.5	-0.8	-3.8	-8.99

	NODE	Vxx	Vyy
Max	Cent	-5.2	0.1
	579	-5.3	0.1
	580	-5.3	0.1
	587	-5.1	0.1
	586	-5.1	0.1
Min	Cent	-5.9	-0.3
	579	-6.0	-0.3
	580	-6.0	-0.3
	587	-5.9	-0.3
	586	-5.9	-0.3

ELEM	MAT	SEC	LC		NODE	Fxx	Fyy	Fxy	Fmax	Fmin	ANGLE
546	1	1	SX (RS)		Cent	0.7	1.2	0.0	1.2	0.7	88.10
					580	0.7	1.0	0.0	1.0	0.7	87.13
					218	0.7	1.4	0.0	1.4	0.7	88.64
					221	0.7	1.4	0.0	1.4	0.7	88.63
					587	0.7	1.0	0.0	1.0	0.7	87.12

	NODE	Mxx	Myy	Mxy	Mmax	Mmin	ANGLE
	Cent	3.2	1.0	0.0	3.2	1.0	0.16
	580	3.7	0.8	0.1	3.7	0.8	2.66
	218	2.7	1.3	0.1	2.7	1.3	5.56
	221	2.7	1.3	0.1	2.7	1.3	5.26
	587	3.7	0.8	0.1	3.7	0.8	2.52

	NODE	Vxx	Vyy
	Cent	2.1	0.0
	580	2.1	0.0
	218	2.1	0.0
	221	2.1	0.0
	587	2.1	0.0

LC		NODE	Fxx	Fyy	Fxy	Fmax	Fmin	ANGLE
SY (RS)		Cent	0.0	0.0	1.6	1.6	-1.6	45.30
		580	0.3	0.0	1.6	1.8	-1.5	42.74
		218	0.3	0.0	1.6	1.8	-1.5	42.70
		221	0.3	0.0	1.6	1.8	-1.5	42.72
		587	0.3	0.0	1.6	1.8	-1.5	42.76

		NODE	Mxx	Myy	Mxy	Mmax	Mmin	ANGLE
		Cent	0.0	0.0	0.9	0.9	-0.9	45.00
		580	0.2	0.6	0.8	1.3	-0.4	51.69
		218	0.4	0.8	0.9	1.5	-0.3	51.81
		221	0.4	0.8	0.9	1.5	-0.3	51.81
		587	0.2	0.6	0.8	1.3	-0.4	51.69

		NODE	Vxx	Vyy
		Cent	0.0	2.5
		580	0.4	2.3
		218	0.4	2.7
		221	0.4	2.7
		587	0.4	2.3

LC		NODE	Fxx	Fyy	Fxy	Fmax	Fmin	ANGLE
RC ENV~1	Max	Cent	0.2	1.6	1.6	1.7	0.2	52.68
		580	0.2	1.4	1.6	1.8	0.2	50.32
		218	0.2	1.7	1.6	1.8	0.2	50.12
		221	0.2	1.7	1.6	1.8	0.2	50.15
		587	0.2	1.4	1.6	1.8	0.2	50.35
	Min	Cent	-1.2	-0.8	-1.6	-0.8	-1.7	-87.84
		580	-1.2	-0.6	-1.6	-0.6	-1.9	-88.51
		218	-1.2	-1.0	-1.6	-1.0	-1.9	-85.53
		221	-1.2	-1.0	-1.6	-1.0	-1.9	-85.57
		587	-1.2	-0.6	-1.6	-0.6	-1.9	-88.51

		NODE	Mxx	Myy	Mxy	Mmax	Mmin	ANGLE
	Max	Cent	8.6	0.7	0.6	8.6	0.6	0.97
		580	6.8	0.2	0.6	6.8	0.2	-0.75
		218	10.3	1.2	0.7	10.3	1.2	0.93
		221	10.6	1.1	0.6	10.6	1.1	1.28
		587	7.0	0.1	0.6	7.0	0.1	0.99
	Min	Cent	1.5	-5.8	-1.1	1.5	-5.8	-4.55
		580	-0.7	-6.3	-1.1	-0.5	-6.3	-22.25
		218	3.6	-5.5	-1.1	3.6	-5.6	-3.77
		221	3.6	-5.3	-1.1	3.7	-5.4	-4.04
		587	-0.6	-5.9	-1.1	-0.4	-5.9	-21.13

		NODE	Vxx	Vyy
	Max	Cent	-3.3	2.6
		580	-3.4	2.4
		218	-3.4	2.8
		221	-3.3	2.8
		587	-3.3	2.4
	Min	Cent	-7.8	-2.4
		580	-7.9	-2.2
		218	-7.9	-2.6
		221	-7.7	-2.6
		587	-7.7	-2.2

LC		NODE	Fxx	Fyy	Fxy	Fmax	Fmin	ANGLE
RC ENV~2	Max	Cent	-0.4	0.4	0.0	0.4	-0.4	89.92
		580	-0.4	0.4	0.0	0.4	-0.4	89.92
		218	-0.4	0.5	0.0	0.5	-0.4	-89.64
		221	-0.4	0.5	0.0	0.5	-0.4	-89.64
		587	-0.4	0.4	0.0	0.4	-0.4	89.92
	Min	Cent	-0.8	0.1	-0.0	0.1	-0.8	-88.32
		580	-0.9	0.1	-0.0	0.1	-0.9	-88.72
		218	-0.9	-0.0	-0.0	-0.0	-0.9	-87.91
		221	-0.8	-0.0	-0.0	-0.0	-0.8	-87.83
		587	-0.8	0.1	-0.0	0.1	-0.8	-88.69

	NODE	Mxx	Myy	Mxy	Mmax	Mmin	ANGLE
Max	Cent	6.3	-0.3	0.3	6.3	-0.3	0.51
	580	4.8	-0.6	0.3	4.8	-0.6	0.08
	218	7.7	-0.0	0.4	7.7	-0.0	0.53
	221	7.8	-0.1	0.4	7.8	-0.1	0.81
	587	5.0	-0.6	0.3	5.0	-0.6	0.46
Min	Cent	3.9	-3.7	-0.2	3.9	-3.7	0.68
	580	2.1	-4.1	-0.2	2.1	-4.1	1.02
	218	5.5	-3.5	-0.2	5.5	-3.5	1.19
	221	5.7	-3.4	-0.2	5.7	-3.4	0.45
	587	2.3	-3.8	-0.3	2.3	-3.9	-0.18

	NODE	Vxx	Vyy
Max	Cent	-4.9	0.1
	580	-4.9	0.1
	218	-4.9	0.1
	221	-4.8	0.1
	587	-4.8	0.1
Min	Cent	-5.9	-0.2
	580	-6.0	-0.3
	218	-6.0	-0.2
	221	-5.9	-0.2
	587	-5.9	-0.3

ELEM	MAT	SEC	LC	NODE	Fxx	Fyy	Fxy	Fmax	Fmin	ANGLE
547	1	1	SX (RS)	Cent	0.3	0.2	0.4	0.7	-0.2	42.97
				536	0.2	0.1	0.4	0.6	-0.3	41.79
				581	0.2	0.4	0.4	0.8	-0.2	53.23
				588	0.5	0.4	0.4	0.9	0.0	42.99
				544	0.5	0.1	0.4	0.8	-0.2	32.22

	NODE	Mxx	Myy	Mxy	Mmax	Mmin	ANGLE
	Cent	1.3	0.2	0.7	1.7	-0.1	25.89
	536	0.0	0.0	0.8	0.8	-0.8	44.68
	581	1.5	0.8	0.3	1.6	0.7	18.77
	588	2.0	0.5	0.6	2.3	0.3	20.27
	544	2.0	0.4	1.2	2.6	-0.2	28.08

	NODE	Vxx	Vyy
	Cent	1.8	0.1
	536	2.9	0.0
	581	2.9	0.2
	588	1.1	0.2
	544	1.1	0.0

LC	NODE	Fxx	Fyy	Fxy	Fmax	Fmin	ANGLE
SY (RS)	Cent	0.4	1.4	0.7	1.7	0.0	63.15
	536	0.1	1.6	0.7	1.9	-0.2	69.32
	581	0.1	1.1	0.7	1.5	-0.3	64.17
	588	0.7	1.1	0.7	1.6	0.2	54.20
	544	0.7	1.6	0.7	2.0	0.3	62.06

	NODE	Mxx	Myy	Mxy	Mmax	Mmin	ANGLE
	Cent	1.2	1.9	0.5	2.2	1.0	62.63
	536	0.6	0.5	0.2	0.8	0.3	37.52
	581	0.4	0.7	0.6	1.2	-0.1	52.44
	588	1.7	3.2	0.7	3.5	1.4	68.43
	544	2.3	3.2	0.3	3.3	2.2	73.65

	NODE	Vxx	Vyy
	Cent	0.8	4.5
	536	0.5	4.6
	581	0.5	4.3
	588	1.1	4.3
	544	1.1	4.6

LC	NODE	Fxx	Fyy	Fxy	Fmax	Fmin	ANGLE

RC ENV~1	Max	Cent	-0.6	2.2	0.7	2.4	-0.8	76.91
		536	-0.8	2.4	0.7	2.6	-0.9	78.85
		581	-0.8	2.0	0.7	2.1	-0.9	77.28
		588	-0.3	2.0	0.7	2.2	-0.5	74.23
		544	-0.3	2.4	0.7	2.6	-0.5	76.52
	Min	Cent	-2.9	-0.6	-0.7	-0.2	-2.9	-60.09
		536	-2.9	-0.8	-0.7	-0.2	-2.9	-50.18
		581	-2.9	-0.3	-0.7	0.1	-2.9	-59.12
		588	-2.8	-0.3	-0.7	-0.0	-2.8	-67.23
		544	-2.8	-0.8	-0.7	-0.4	-2.8	-61.04

		NODE	Mxx	Myy	Mxy	Mmax	Mmin	ANGLE
	Max	Cent	3.3	0.2	-0.1	4.1	-0.1	-17.52
		536	2.3	-2.1	-0.2	3.3	-2.5	-18.39
		581	1.6	-1.5	-0.1	2.2	-1.5	-15.62
		588	3.9	2.2	0.2	4.5	0.9	-17.25
		544	5.5	2.0	0.3	6.5	1.5	-18.82
	Min	Cent	-2.3	-5.6	-4.1	-1.5	-7.7	-30.00
		536	-1.9	-7.2	-4.4	-1.3	-9.2	-8.87
		581	-3.1	-7.3	-3.7	-2.1	-8.9	-45.86
		588	-2.8	-4.3	-3.7	-1.8	-6.2	-27.83
		544	-2.4	-4.4	-4.5	-1.9	-6.5	-25.12

		NODE	Vxx	Vyy
	Max	Cent	2.7	2.4
		536	3.5	2.4
		581	3.5	2.3
		588	2.9	2.3
		544	2.9	2.4
	Min	Cent	-0.9	-6.5
		536	-2.2	-6.7
		581	-2.2	-6.4
		588	0.1	-6.4
		544	0.1	-6.7

LC		NODE	Fxx	Fyy	Fxy	Fmax	Fmin	ANGLE
RC ENV~2	Max	Cent	-0.7	1.4	0.1	1.4	-0.7	89.30
		536	-0.7	1.4	0.1	1.4	-0.7	89.31
		581	-0.7	1.4	0.1	1.4	-0.7	-89.61
		588	-0.6	1.4	0.1	1.4	-0.6	-89.60
		544	-0.6	1.4	0.1	1.4	-0.6	89.31
	Min	Cent	-2.0	0.7	-0.0	0.7	-2.0	-89.05
		536	-2.0	0.7	-0.0	0.7	-2.0	-89.05
		581	-2.0	0.7	-0.0	0.7	-2.0	88.89
		588	-2.0	0.7	-0.0	0.7	-2.0	88.89
		544	-2.0	0.7	-0.0	0.7	-2.0	-89.00

		NODE	Mxx	Myy	Mxy	Mmax	Mmin	ANGLE
	Max	Cent	2.0	-1.7	-0.7	2.6	-2.1	-17.69
		536	1.3	-2.6	-1.0	2.0	-3.1	-18.58
		581	0.8	-2.2	-0.7	1.3	-2.6	-15.86
		588	2.4	-0.9	-0.5	2.9	-1.2	-17.46
		544	3.6	-1.1	-0.8	4.3	-1.5	-18.89
	Min	Cent	-1.0	-3.9	-2.7	-0.5	-5.2	-32.57
		536	-1.3	-5.0	-3.0	-0.8	-6.4	-29.38
		581	-1.6	-5.0	-2.4	-1.2	-6.1	-34.28
		588	-0.9	-2.9	-2.5	-0.4	-4.2	-41.91
		544	-0.3	-2.9	-3.0	0.2	-4.4	-30.19

		NODE	Vxx	Vyy
	Max	Cent	1.5	-2.1
		536	1.2	-2.1
		581	1.2	-2.0
		588	2.1	-2.0
		544	2.1	-2.1
	Min	Cent	0.6	-4.3
		536	0.3	-4.4
		581	0.3	-4.2
		588	0.6	-4.2
		544	0.6	-4.4

ELEM	MAT	SEC	LC	NODE	Fxx	Fyy	Fxy	Fmax	Fmin	ANGLE

548	1	1	SX (RS)	Cent	0.6	0.5	0.5	1.0	0.0	42.51
				581	0.6	0.4	0.5	1.0	0.0	40.67
				582	0.6	0.5	0.5	1.1	0.1	43.70
				589	0.6	0.5	0.5	1.0	0.1	44.42
				588	0.6	0.4	0.5	1.0	0.0	41.37

	NODE	Mxx	Myy	Mxy	Mmax	Mmin	ANGLE
	Cent	2.3	0.5	0.1	2.3	0.5	2.30
	581	1.7	0.7	0.2	1.7	0.7	12.79
	582	2.4	0.8	0.0	2.4	0.8	1.46
	589	3.0	0.4	0.1	3.0	0.4	3.12
	588	2.3	0.5	0.1	2.3	0.5	4.59

	NODE	Vxx	Vyy
	Cent	1.3	0.8
	581	1.4	0.2
	582	1.4	1.3
	589	1.3	1.3
	588	1.3	0.2

LC		NODE	Fxx	Fyy	Fxy	Fmax	Fmin	ANGLE
SY (RS)		Cent	0.1	0.7	1.7	2.1	-1.3	50.47
		581	0.1	1.2	1.7	2.4	-1.1	54.54
		582	0.1	0.3	1.7	1.8	-1.5	47.24
		589	0.2	0.3	1.7	1.9	-1.4	45.72
		588	0.2	1.2	1.7	2.4	-1.0	53.16

	NODE	Mxx	Myy	Mxy	Mmax	Mmin	ANGLE
	Cent	0.3	1.8	0.9	2.2	-0.1	64.85
	581	0.5	0.7	0.9	1.5	-0.3	49.33
	582	0.1	0.9	0.8	1.4	-0.4	59.16
	589	0.3	2.2	0.7	2.5	0.0	71.33
	588	1.1	3.1	0.8	3.4	0.8	69.98

	NODE	Vxx	Vyy
	Cent	1.5	3.5
	581	0.8	4.3
	582	0.8	2.6
	589	2.2	2.6
	588	2.2	4.3

LC		NODE	Fxx	Fyy	Fxy	Fmax	Fmin	ANGLE
RC ENV~1	Max	Cent	-0.4	1.9	1.7	2.4	-0.6	63.30
		581	-0.4	2.0	1.7	2.8	-0.6	65.91
		582	-0.4	1.9	1.7	2.1	-0.5	61.15
		589	-0.4	1.9	1.7	2.1	-0.6	59.94
		588	-0.4	2.0	1.7	2.8	-0.6	64.97
	Min	Cent	-2.8	0.1	-1.7	0.5	-2.8	-76.90
		581	-2.8	-0.4	-1.7	0.5	-2.8	-77.27
		582	-2.8	0.3	-1.7	0.4	-2.8	-76.73
		589	-2.7	0.3	-1.7	0.4	-2.7	-76.49
		588	-2.7	-0.4	-1.7	0.5	-2.7	-77.04

	NODE	Mxx	Myy	Mxy	Mmax	Mmin	ANGLE
Max	Cent	0.5	0.4	0.5	1.2	-1.0	-21.66
	581	1.0	-1.6	0.3	1.5	-1.7	-13.97
	582	-0.4	-0.5	0.3	-0.1	-1.1	-36.13
	589	0.2	1.5	0.6	1.5	-0.3	81.97
	588	3.2	2.0	0.6	3.4	-0.2	-11.85
Min	Cent	-4.5	-5.6	-2.9	-1.8	-7.0	-80.95
	581	-3.6	-7.4	-3.3	-2.5	-8.6	-55.64
	582	-5.2	-6.6	-2.9	-2.1	-8.0	-80.11
	589	-5.8	-4.2	-2.6	-2.1	-5.9	-46.18
	588	-3.5	-4.3	-3.0	-1.8	-5.7	-24.59

	NODE	Vxx	Vyy
Max	Cent	5.9	1.8
	581	4.6	2.3

			582	4.6	1.3			
			589	7.2	1.3			
			588	7.2	2.3			
		Min	Cent	0.9	-5.3			
			581	0.5	-6.4			
			582	0.5	-4.8			
			589	0.8	-4.8			
			588	0.8	-6.4			

LC		NODE	Fxx	Fyy	Fxy	Fmax	Fmin	ANGLE
RC ENV~2	Max	Cent	-0.8	1.4	0.1	1.4	-0.8	-89.73
		581	-0.8	1.4	0.1	1.4	-0.8	88.97
		582	-0.8	1.4	0.1	1.4	-0.8	-89.74
		589	-0.8	1.4	0.1	1.4	-0.8	-89.73
		588	-0.8	1.4	0.1	1.4	-0.8	88.95
	Min	Cent	-2.0	0.7	-0.0	0.7	-2.0	88.36
		581	-2.0	0.7	-0.0	0.7	-2.0	-89.23
		582	-2.0	0.7	-0.0	0.7	-2.0	88.37
		589	-2.0	0.7	-0.0	0.7	-2.0	88.34
		588	-2.0	0.7	-0.0	0.7	-2.0	-89.22

		NODE	Mxx	Myy	Mxy	Mmax	Mmin	ANGLE
	Max	Cent	0.0	-1.3	-0.3	0.4	-2.0	-22.52
		581	0.4	-2.3	-0.5	0.7	-2.6	-14.22
		582	-1.3	-1.4	-0.4	-0.6	-2.7	-25.39
		589	-0.9	-0.6	-0.1	-0.1	-1.6	-30.26
		588	1.9	-1.0	-0.2	2.0	-1.1	-11.61
	Min	Cent	-2.3	-3.8	-1.9	-1.3	-4.7	-67.11
		581	-2.0	-5.1	-2.2	-1.6	-5.9	-38.58
		582	-2.9	-4.4	-1.9	-1.5	-5.4	-50.03
		589	-2.9	-2.8	-1.7	-1.1	-4.0	-51.72
		588	-1.3	-2.9	-1.9	-0.9	-3.8	-56.75

		NODE	Vxx	Vyy
	Max	Cent	4.3	-1.7
		581	3.3	-2.0
		582	3.3	-1.3
		589	5.2	-1.3
		588	5.2	-2.0
	Min	Cent	2.2	-3.7
		581	1.7	-4.2
		582	1.7	-3.3
		589	2.7	-3.3
		588	2.7	-4.2

ELEM	MAT	SEC	LC		NODE	Fxx	Fyy	Fxy	Fmax	Fmin	ANGLE
549	1	1	SX (RS)		Cent	1.1	0.5	0.5	1.4	0.2	29.23
					582	0.9	0.6	0.5	1.3	0.3	36.86
					583	0.9	0.4	0.5	1.2	0.1	30.23
					590	1.3	0.4	0.5	1.5	0.1	23.33
					589	1.3	0.6	0.5	1.6	0.4	28.11

		NODE	Mxx	Myy	Mxy	Mmax	Mmin	ANGLE
		Cent	2.5	0.5	0.3	2.5	0.5	8.05
		582	2.3	0.8	0.2	2.3	0.7	6.76
		583	2.6	0.6	0.2	2.6	0.6	6.38
		590	2.5	0.6	0.4	2.5	0.5	10.24
		589	2.7	0.4	0.3	2.8	0.4	7.60

		NODE	Vxx	Vyy
		Cent	1.7	1.0
		582	1.4	1.3
		583	1.4	0.6
		590	2.0	0.6
		589	2.0	1.3

LC		NODE	Fxx	Fyy	Fxy	Fmax	Fmin	ANGLE
SY (RS)		Cent	0.2	0.2	1.8	2.1	-1.6	44.98
		582	0.1	0.4	1.8	2.1	-1.6	47.32

		583	0.1	0.2	1.8	2.0	-1.7	46.00
		590	0.4	0.2	1.8	2.1	-1.6	43.51
		589	0.4	0.4	1.8	2.2	-1.5	44.83

	NODE	Mxx	Myy	Mxy	Mmax	Mmin	ANGLE
	Cent	0.1	1.3	0.5	1.5	-0.1	69.21
	582	0.1	1.0	0.7	1.4	-0.3	60.48
	583	0.2	0.7	0.5	1.0	-0.2	58.81
	590	0.6	1.3	0.3	1.5	0.5	68.46
	589	0.2	2.3	0.5	2.5	0.1	77.38

	NODE	Vxx	Vyy
	Cent	0.8	2.0
	582	0.4	2.6
	583	0.4	1.4
	590	1.1	1.4
	589	1.1	2.6

LC		NODE	Fxx	Fyy	Fxy	Fmax	Fmin	ANGLE
RC ENV~1	Max	Cent	0.1	1.8	1.8	2.2	-0.1	58.29
		582	-0.1	1.9	1.8	2.3	-0.2	60.15
		583	-0.1	1.8	1.8	2.1	-0.3	59.06
		590	0.3	1.8	1.8	2.2	0.1	57.03
		589	0.3	1.9	1.8	2.3	0.1	58.21
	Min	Cent	-2.7	0.3	-1.8	0.4	-2.7	-79.11
		582	-2.7	0.2	-1.8	0.3	-2.7	-77.72
		583	-2.7	0.5	-1.8	0.6	-2.7	-78.89
		590	-2.8	0.5	-1.8	0.6	-2.8	-80.25
		589	-2.8	0.2	-1.8	0.3	-2.8	-79.34

	NODE	Mxx	Myy	Mxy	Mmax	Mmin	ANGLE
Max	Cent	-1.2	0.3	0.1	0.3	-1.2	88.33
	582	-1.0	-0.6	0.2	-0.6	-1.2	-52.33
	583	-1.4	-0.3	-0.0	-0.3	-1.5	-89.32
	590	-1.7	0.6	-0.0	0.6	-1.7	-89.24
	589	-0.5	1.5	0.2	1.5	-0.5	87.35
Min	Cent	-6.1	-5.4	-2.4	-2.2	-6.9	-42.69
	582	-5.6	-6.6	-2.6	-2.2	-7.9	-39.98
	583	-6.5	-6.2	-2.4	-2.8	-7.7	-46.52
	590	-6.7	-4.5	-2.3	-2.2	-6.8	-56.41
	589	-5.9	-4.3	-2.5	-2.5	-6.0	-48.96

	NODE	Vxx	Vyy
Max	Cent	4.8	1.0
	582	4.3	1.3
	583	4.3	0.7
	590	5.4	0.7
	589	5.4	1.3
Min	Cent	-0.1	-4.1
	582	-0.0	-4.8
	583	-0.0	-3.5
	590	-0.2	-3.5
	589	-0.2	-4.8

LC		NODE	Fxx	Fyy	Fxy	Fmax	Fmin	ANGLE
RC ENV~2	Max	Cent	-1.0	1.3	0.1	1.3	-1.0	-89.31
		582	-1.0	1.4	0.1	1.4	-1.0	-89.32
		583	-1.0	1.3	0.1	1.3	-1.0	-89.31
		590	-0.9	1.3	0.1	1.3	-0.9	-89.30
		589	-0.9	1.4	0.1	1.4	-0.9	-89.31
	Min	Cent	-2.0	0.7	-0.1	0.7	-2.0	88.49
		582	-2.0	0.7	-0.1	0.7	-2.0	88.48
		583	-2.0	0.7	-0.1	0.7	-2.0	88.47
		590	-2.0	0.7	-0.1	0.7	-2.0	88.49
		589	-2.0	0.7	-0.1	0.7	-2.0	88.50

	NODE	Mxx	Myy	Mxy	Mmax	Mmin	ANGLE
Max	Cent	-2.4	-0.9	-0.4	-0.9	-3.2	-81.99
	582	-1.9	-1.5	-0.4	-1.2	-3.2	-26.01
	583	-3.2	-0.9	-0.5	-0.8	-4.0	-79.85

		590	-2.8	-0.6	-0.3	-0.6	-3.9	-84.55
		589	-1.3	-0.7	-0.2	-0.4	-2.1	-32.98
	Min	Cent	-3.7	-3.6	-1.6	-1.7	-4.7	-50.23
		582	-3.3	-4.5	-1.7	-1.8	-5.4	-55.72
		583	-4.0	-4.1	-1.6	-2.1	-5.3	-53.85
		590	-4.3	-3.0	-1.5	-1.6	-4.4	-63.87
		589	-3.3	-2.9	-1.6	-1.2	-4.1	-54.37

		NODE	Vxx	Vyy
	Max	Cent	3.4	-1.0
		582	3.1	-1.3
		583	3.1	-0.7
		590	3.8	-0.7
		589	3.8	-1.3
	Min	Cent	1.1	-2.8
		582	1.0	-3.3
		583	1.0	-2.3
		590	1.2	-2.3
		589	1.2	-3.3

ELEM	MAT	SEC	LC		NODE	Fxx	Fyy	Fxy	Fmax	Fmin	ANGLE
550	1	1	SX (RS)		Cent	1.3	0.4	0.3	1.4	0.3	16.23
					583	1.2	0.4	0.3	1.3	0.3	17.67
					584	1.2	0.4	0.3	1.3	0.3	18.16
					591	1.5	0.4	0.3	1.5	0.3	14.99
					590	1.5	0.4	0.3	1.5	0.3	14.64

		NODE	Mxx	Myy	Mxy	Mmax	Mmin	ANGLE
		Cent	2.6	0.6	0.2	2.6	0.6	6.00
		583	2.5	0.6	0.2	2.5	0.6	5.98
		584	2.9	0.7	0.1	2.9	0.6	3.59
		591	2.8	0.7	0.2	2.8	0.7	5.80
		590	2.4	0.6	0.3	2.4	0.5	8.33

		NODE	Vxx	Vyy
		Cent	1.9	0.5
		583	1.8	0.6
		584	1.8	0.3
		591	2.0	0.3
		590	2.0	0.6

LC		NODE	Fxx	Fyy	Fxy	Fmax	Fmin	ANGLE
SY (RS)		Cent	0.1	0.2	1.8	2.0	-1.7	45.22
		583	0.1	0.2	1.8	2.0	-1.7	45.77
		584	0.1	0.2	1.8	2.0	-1.7	45.61
		591	0.2	0.2	1.8	2.0	-1.6	44.63
		590	0.2	0.2	1.8	2.0	-1.6	44.80

		NODE	Mxx	Myy	Mxy	Mmax	Mmin	ANGLE
		Cent	0.2	0.9	0.2	1.0	0.2	76.43
		583	0.0	0.7	0.3	0.9	-0.1	69.20
		584	0.2	0.5	0.2	0.6	0.1	68.65
		591	0.4	1.0	0.1	1.0	0.4	84.24
		590	0.2	1.4	0.2	1.5	0.2	81.20

		NODE	Vxx	Vyy
		Cent	0.2	1.2
		583	0.1	1.4
		584	0.1	1.1
		591	0.2	1.1
		590	0.2	1.4

LC		NODE	Fxx	Fyy	Fxy	Fmax	Fmin	ANGLE
RC ENV~1	Max	Cent	0.3	1.7	1.8	2.1	0.2	58.55
		583	0.2	1.8	1.8	2.1	0.1	59.11
		584	0.2	1.6	1.8	2.0	0.1	58.62
		591	0.4	1.6	1.8	2.1	0.3	57.94
		590	0.4	1.8	1.8	2.1	0.3	58.45

Min	Cent	-2.7	0.4	-1.8	0.4	-2.7	-83.53
	583	-2.7	0.5	-1.8	0.5	-2.7	-83.35
	584	-2.7	0.4	-1.8	0.4	-2.7	-83.13
	591	-2.8	0.4	-1.8	0.4	-2.8	-83.70
	590	-2.8	0.5	-1.8	0.5	-2.8	-83.88

	NODE	Mxx	Myy	Mxy	Mmax	Mmin	ANGLE
Max	Cent	-1.6	0.1	-0.4	0.1	-1.7	-84.11
	583	-1.7	-0.4	-0.3	-0.3	-1.9	-85.73
	584	-1.2	-0.2	-0.5	-0.0	-1.4	-65.94
	591	-1.4	0.4	-0.4	0.5	-1.5	-82.50
	590	-1.9	0.7	-0.3	0.7	-2.0	-85.77
Min	Cent	-6.8	-5.4	-2.0	-2.8	-6.9	-55.58
	583	-6.7	-6.3	-2.2	-3.2	-7.6	-49.27
	584	-7.0	-6.2	-1.9	-3.6	-7.4	-37.74
	591	-7.0	-4.6	-1.9	-2.5	-7.1	-60.89
	590	-6.7	-4.5	-2.2	-2.2	-6.8	-56.58

	NODE	Vxx	Vyy
Max	Cent	1.7	0.6
	583	1.6	0.7
	584	1.6	0.6
	591	1.8	0.6
	590	1.8	0.7
Min	Cent	-2.1	-3.2
	583	-2.0	-3.5
	584	-2.0	-3.1
	591	-2.2	-3.1
	590	-2.2	-3.5

LC		NODE	Fxx	Fyy	Fxy	Fmax	Fmin	ANGLE
RC ENV~2	Max	Cent	-1.0	1.2	0.0	1.2	-1.0	-88.65
		583	-1.0	1.3	0.0	1.3	-1.0	89.93
		584	-1.0	1.2	0.0	1.2	-1.0	-88.61
		591	-1.0	1.2	0.0	1.2	-1.0	-88.63
		590	-1.0	1.3	0.0	1.3	-1.0	89.93
	Min	Cent	-2.0	0.7	-0.1	0.7	-2.0	89.49
		583	-1.9	0.7	-0.1	0.7	-1.9	-87.95
		584	-1.9	0.6	-0.1	0.6	-1.9	89.48
		591	-2.0	0.6	-0.1	0.6	-2.0	89.48
		590	-2.0	0.7	-0.1	0.7	-2.0	-87.96

	NODE	Mxx	Myy	Mxy	Mmax	Mmin	ANGLE
Max	Cent	-3.0	-0.7	-0.6	-0.6	-4.0	-80.45
	583	-3.4	-1.0	-0.6	-0.9	-4.3	-79.95
	584	-3.1	-0.8	-0.7	-0.6	-4.0	-78.88
	591	-2.6	-0.5	-0.6	-0.4	-3.6	-80.75
	590	-2.8	-0.6	-0.5	-0.6	-4.0	-81.94
Min	Cent	-4.3	-3.6	-1.4	-2.1	-4.8	-42.39
	583	-4.3	-4.2	-1.5	-2.4	-5.3	-38.38
	584	-4.4	-4.1	-1.3	-2.6	-5.2	-45.10
	591	-4.4	-3.0	-1.3	-1.8	-4.6	-46.44
	590	-4.4	-3.0	-1.5	-1.6	-4.4	-63.57

	NODE	Vxx	Vyy
Max	Cent	0.9	-0.6
	583	0.9	-0.7
	584	0.9	-0.5
	591	0.9	-0.5
	590	0.9	-0.7
Min	Cent	-0.7	-2.2
	583	-0.7	-2.3
	584	-0.7	-2.0
	591	-0.8	-2.0
	590	-0.8	-2.3

ELEM	MAT	SEC	LC		NODE	Fxx	Fyy	Fxy	Fmax	Fmin	ANGLE
551	1	1	SX (RS)		Cent	1.5	0.5	0.3	1.5	0.4	13.93
					584	1.3	0.4	0.3	1.4	0.3	14.78
					585	1.3	0.5	0.3	1.4	0.4	16.41
					592	1.6	0.5	0.3	1.7	0.4	13.16

591	1.6	0.4	0.3	1.6	0.3	12.06

NODE	Mxx	Myy	Mxy	Mmax	Mmin	ANGLE
Cent	3.2	0.7	0.2	3.2	0.7	3.83
584	2.9	0.7	0.1	3.0	0.7	3.21
585	3.6	0.6	0.2	3.6	0.6	2.90
592	3.6	0.9	0.2	3.6	0.8	4.35
591	2.8	0.7	0.2	2.8	0.7	4.97

NODE	Vxx	Vyy
Cent	1.8	0.4
584	1.7	0.3
585	1.7	0.5
592	1.9	0.5
591	1.9	0.3

LC		NODE	Fxx	Fyy	Fxy	Fmax	Fmin	ANGLE
SY (RS)		Cent	0.2	0.2	2.0	2.2	-1.8	44.63
		584	0.1	0.2	2.0	2.1	-1.8	45.17
		585	0.1	0.2	2.0	2.1	-1.8	45.45
		592	0.3	0.2	2.0	2.2	-1.7	44.06
		591	0.3	0.2	2.0	2.2	-1.7	43.79

NODE	Mxx	Myy	Mxy	Mmax	Mmin	ANGLE
Cent	0.2	0.8	0.1	0.8	0.2	80.99
584	0.1	0.5	0.0	0.5	0.1	85.74
585	0.1	0.5	0.2	0.6	0.1	72.24
592	0.4	1.1	0.2	1.1	0.3	76.49
591	0.3	1.0	0.1	1.1	0.3	85.13

NODE	Vxx	Vyy
Cent	0.1	1.1
584	0.1	1.1
585	0.1	1.1
592	0.2	1.1
591	0.2	1.1

LC		NODE	Fxx	Fyy	Fxy	Fmax	Fmin	ANGLE
RC ENV~1	Max	Cent	0.4	1.5	1.9	2.1	0.4	56.90
		584	0.4	1.6	1.9	2.1	0.3	57.38
		585	0.4	1.3	1.9	2.1	0.3	57.05
		592	0.5	1.3	1.9	2.1	0.5	56.39
		591	0.5	1.6	1.9	2.2	0.5	56.74
	Min	Cent	-2.8	0.3	-2.0	0.3	-2.8	-83.29
		584	-2.6	0.4	-2.0	0.4	-2.7	-83.13
		585	-2.6	0.2	-2.0	0.2	-2.7	-82.59
		592	-2.9	0.2	-2.0	0.2	-3.0	-83.45
		591	-2.9	0.4	-2.0	0.4	-3.0	-83.88

NODE	Mxx	Myy	Mxy	Mmax	Mmin	ANGLE
Max Cent	-0.3	0.1	-0.6	0.5	-0.7	-52.64
584	-1.1	-0.2	-0.5	0.0	-1.4	-64.87
585	0.8	-0.2	-0.6	1.0	-0.5	-25.29
592	0.7	0.7	-0.6	1.2	0.0	-37.83
591	-1.4	0.4	-0.5	0.5	-1.6	-81.69
Min Cent	-6.7	-5.4	-1.6	-2.9	-6.8	-55.23
584	-7.0	-6.2	-1.6	-3.8	-7.1	-36.25
585	-6.4	-6.2	-1.5	-3.2	-6.7	-46.15
592	-6.4	-4.5	-1.6	-2.3	-6.6	-53.78
591	-7.0	-4.6	-1.8	-2.5	-7.1	-61.49

NODE	Vxx	Vyy
Max Cent	-0.5	0.4
584	-0.5	0.6
585	-0.5	0.3
592	-0.5	0.3
591	-0.5	0.6
Min Cent	-4.1	-3.3
584	-3.9	-3.1

		585	-3.9	-3.6	
		592	-4.2	-3.6	
		591	-4.2	-3.1	

LC		NODE	Fxx	Fyy	Fxy	Fmax	Fmin	ANGLE
RC ENV~2	Max	Cent	-0.9	1.1	0.0	1.1	-0.9	-86.53
		584	-0.9	1.2	0.0	1.2	-0.9	-88.69
		585	-0.9	1.0	0.0	1.0	-0.9	-86.28
		592	-0.8	1.0	0.0	1.0	-0.8	-86.54
		591	-0.8	1.2	0.0	1.2	-0.8	-88.73
	Min	Cent	-2.0	0.6	-0.2	0.6	-2.0	-89.30
		584	-1.9	0.6	-0.2	0.7	-1.9	-87.28
		585	-1.9	0.5	-0.2	0.5	-1.9	-89.26
		592	-2.1	0.5	-0.2	0.5	-2.1	-89.27
		591	-2.1	0.6	-0.2	0.7	-2.1	-87.39

		NODE	Mxx	Myy	Mxy	Mmax	Mmin	ANGLE
	Max	Cent	-2.1	-0.6	-0.7	-0.4	-3.1	-76.04
		584	-3.1	-0.8	-0.7	-0.6	-3.9	-78.56
		585	-1.6	-0.7	-0.7	-0.5	-2.9	-71.27
		592	-1.1	-0.3	-0.8	-0.0	-2.4	-73.36
		591	-2.6	-0.5	-0.7	-0.4	-3.5	-79.03
	Min	Cent	-3.8	-3.5	-1.2	-2.1	-4.3	-36.62
		584	-4.4	-4.1	-1.2	-2.8	-5.0	-39.43
		585	-3.5	-4.1	-1.1	-2.3	-4.5	-31.01
		592	-3.2	-2.9	-1.1	-1.5	-3.7	-60.42
		591	-4.4	-3.0	-1.3	-1.9	-4.6	-46.22

		NODE	Vxx	Vyy
	Max	Cent	-1.5	-0.6
		584	-1.5	-0.5
		585	-1.5	-0.8
		592	-1.5	-0.8
		591	-1.5	-0.5
	Min	Cent	-2.9	-2.2
		584	-2.8	-2.0
		585	-2.8	-2.4
		592	-3.0	-2.4
		591	-3.0	-2.0

ELEM	MAT	SEC	LC		NODE	Fxx	Fyy	Fxy	Fmax	Fmin	ANGLE
552	1	1	SX (RS)		Cent	1.4	0.6	0.4	1.6	0.4	23.68
					585	1.2	0.5	0.4	1.4	0.3	25.11
					586	1.2	0.8	0.4	1.5	0.5	32.11
					593	1.7	0.8	0.4	1.9	0.6	22.50
					592	1.7	0.5	0.4	1.8	0.3	18.27

		NODE	Mxx	Myy	Mxy	Mmax	Mmin	ANGLE
		Cent	4.0	0.7	0.2	4.0	0.7	3.63
		585	3.7	0.7	0.2	3.7	0.6	3.09
		586	4.1	0.5	0.1	4.1	0.5	2.12
		593	4.5	1.0	0.2	4.6	1.0	3.74
		592	3.7	0.9	0.3	3.7	0.8	5.31

		NODE	Vxx	Vyy
		Cent	1.4	0.7
		585	1.1	0.5
		586	1.1	1.0
		593	1.7	1.0
		592	1.7	0.5

LC		NODE	Fxx	Fyy	Fxy	Fmax	Fmin	ANGLE
SY (RS)		Cent	0.3	0.0	2.2	2.4	-2.1	42.97
		585	0.1	0.2	2.2	2.4	-2.1	45.41
		586	0.1	0.2	2.2	2.4	-2.1	45.41
		593	0.5	0.2	2.2	2.6	-1.9	42.62
		592	0.5	0.2	2.2	2.6	-1.9	42.62

		NODE	Mxx	Myy	Mxy	Mmax	Mmin	ANGLE

	Cent	0.2	0.9	0.4	1.1	0.1	66.15
	585	0.1	0.5	0.3	0.7	-0.1	61.08
	586	0.1	0.7	0.5	0.9	-0.2	59.36
	593	0.4	1.5	0.4	1.7	0.3	70.73
	592	0.4	1.0	0.3	1.1	0.3	69.36

	NODE	Vxx	Vyy
	Cent	0.4	1.4
	585	0.2	1.1
	586	0.2	1.7
	593	0.6	1.7
	592	0.6	1.1

LC		NODE	Fxx	Fyy	Fxy	Fmax	Fmin	ANGLE
RC ENV~1	Max	Cent	0.5	1.2	2.1	2.2	0.4	-55.51
		585	0.4	1.4	2.1	2.3	0.3	55.50
		586	0.4	1.3	2.1	2.1	0.3	-52.21
		593	0.6	1.3	2.1	2.2	0.5	52.64
		592	0.6	1.4	2.1	2.4	0.5	54.15
	Min	Cent	-2.7	-0.1	-2.4	0.1	-2.9	-76.46
		585	-2.3	0.2	-2.4	0.3	-2.7	-76.13
		586	-2.3	-0.4	-2.4	-0.2	-2.8	-72.64
		593	-3.0	-0.4	-2.4	-0.2	-3.2	-76.74
		592	-3.0	0.2	-2.4	0.3	-3.2	-78.95

	NODE	Mxx	Myy	Mxy	Mmax	Mmin	ANGLE
Max	Cent	2.6	0.4	-0.5	2.7	0.0	-14.03
	585	1.1	-0.1	-0.4	1.3	-0.3	-21.09
	586	3.8	-0.3	-0.3	3.9	-0.5	-8.32
	593	4.5	1.4	-0.5	4.6	0.8	-10.62
	592	0.9	0.6	-0.6	1.4	0.0	-35.40
Min	Cent	-5.5	-5.3	-1.5	-2.0	-5.7	-31.20
	585	-6.3	-6.2	-1.3	-3.3	-6.5	-43.35
	586	-4.5	-6.3	-1.3	-1.4	-6.5	-15.40
	593	-4.6	-4.1	-1.7	-0.7	-5.0	-73.58
	592	-6.4	-4.5	-1.7	-2.3	-6.7	-53.47

	NODE	Vxx	Vyy
Max	Cent	-3.0	0.2
	585	-3.0	0.3
	586	-3.0	0.1
	593	-3.0	0.1
	592	-3.0	0.3
Min	Cent	-7.4	-4.3
	585	-6.6	-3.6
	586	-6.6	-5.1
	593	-8.1	-5.1
	592	-8.1	-3.6

LC		NODE	Fxx	Fyy	Fxy	Fmax	Fmin	ANGLE
RC ENV~2	Max	Cent	-0.7	0.8	0.0	0.8	-0.7	-85.31
		585	-0.7	1.0	0.0	1.1	-0.7	-81.09
		586	-0.7	0.6	0.0	0.6	-0.7	-84.56
		593	-0.7	0.6	0.0	0.6	-0.7	-85.14
		592	-0.7	1.0	0.0	1.1	-0.7	-82.51
	Min	Cent	-1.9	0.4	-0.4	0.4	-2.0	-78.86
		585	-1.6	0.5	-0.4	0.6	-1.7	-86.76
		586	-1.6	0.2	-0.4	0.3	-1.7	-75.84
		593	-2.2	0.2	-0.4	0.2	-2.2	-78.86
		592	-2.2	0.5	-0.4	0.6	-2.2	-86.93

	NODE	Mxx	Myy	Mxy	Mmax	Mmin	ANGLE
Max	Cent	0.1	-0.4	-0.7	0.6	-1.8	-23.77
	585	-1.3	-0.7	-0.7	-0.4	-2.7	-69.36
	586	1.2	-0.9	-0.6	1.4	-1.4	-11.94
	593	1.9	0.1	-0.8	2.3	-0.9	-18.79
	592	-1.0	-0.2	-0.8	0.1	-2.4	-70.68
Min	Cent	-2.0	-3.4	-1.1	-1.4	-3.7	-38.78
	585	-3.2	-4.0	-1.0	-2.2	-4.3	-52.79
	586	-1.2	-4.2	-0.9	-0.9	-4.3	-18.95

593	-0.7	-2.6	-1.2	-0.3	-2.8	-28.49
592	-3.1	-2.9	-1.3	-1.5	-3.6	-59.95

	NODE	Vxx	Vyy
Max	Cent	-3.7	-1.1
	585	-3.6	-0.8
	586	-3.6	-1.5
	593	-3.9	-1.5
	592	-3.9	-0.8
Min	Cent	-5.5	-3.0
	585	-5.0	-2.4
	586	-5.0	-3.5
	593	-6.0	-3.5
	592	-6.0	-2.4

ELEM	MAT	SEC	LC		NODE	Fxx	Fyy	Fxy	Fmax	Fmin	ANGLE
553	1	1	SX (RS)		Cent	1.1	0.9	0.5	1.5	0.5	38.63
					586	1.1	0.8	0.5	1.4	0.4	36.08
					587	1.1	1.0	0.5	1.5	0.6	43.95
					594	1.1	1.0	0.5	1.5	0.6	41.49
					593	1.1	0.8	0.5	1.4	0.4	33.90

	NODE	Mxx	Myy	Mxy	Mmax	Mmin	ANGLE
	Cent	4.3	0.7	0.1	4.3	0.7	2.26
	586	4.2	0.5	0.1	4.2	0.5	1.12
	587	4.0	0.7	0.2	4.0	0.6	4.09
	594	4.5	0.8	0.2	4.5	0.8	3.43
	593	4.8	1.0	0.1	4.8	1.0	2.24

	NODE	Vxx	Vyy
	Cent	0.6	0.5
	586	0.6	1.0
	587	0.6	0.1
	594	0.6	0.1
	593	0.6	1.0

LC		NODE	Fxx	Fyy	Fxy	Fmax	Fmin	ANGLE
SY (RS)		Cent	0.2	0.5	2.3	2.6	-1.9	46.90
		586	0.1	0.1	2.3	2.4	-2.1	44.87
		587	0.1	0.9	2.3	2.8	-1.8	49.66
		594	0.3	0.9	2.3	2.9	-1.7	48.78
		593	0.3	0.1	2.3	2.5	-2.1	43.98

	NODE	Mxx	Myy	Mxy	Mmax	Mmin	ANGLE
	Cent	0.3	1.2	0.7	1.6	-0.1	60.41
	586	0.1	0.7	0.6	1.1	-0.3	56.21
	587	0.3	0.6	0.8	1.2	-0.4	50.92
	594	0.7	2.0	0.8	2.3	0.3	65.34
	593	0.5	1.5	0.6	1.7	0.2	64.42

	NODE	Vxx	Vyy
	Cent	0.8	2.1
	586	0.4	1.7
	587	0.4	2.6
	594	1.1	2.6
	593	1.1	1.7

LC		NODE	Fxx	Fyy	Fxy	Fmax	Fmin	ANGLE
RC ENV~1	Max	Cent	0.4	1.3	2.1	2.4	0.3	54.64
		586	0.4	1.2	2.1	2.3	0.3	-51.99
		587	0.4	1.4	2.1	2.6	0.3	56.85
		594	0.4	1.4	2.1	2.7	0.3	56.22
		593	0.4	1.2	2.1	2.2	0.3	52.18
	Min	Cent	-2.0	-0.4	-2.4	-0.2	-3.0	-68.25
		586	-1.9	-0.3	-2.4	-0.0	-2.7	-69.53
		587	-1.9	-0.6	-2.4	-0.3	-3.1	-65.40
		594	-2.0	-0.6	-2.4	-0.4	-3.2	-66.76
		593	-2.0	-0.3	-2.4	-0.0	-2.9	-70.55

	NODE	Mxx	Myy	Mxy	Mmax	Mmin	ANGLE
Max	Cent	6.0	0.7	-0.0	6.1	0.7	-5.99
	586	4.1	-0.2	-0.0	4.2	-0.2	-7.73
	587	6.8	-0.3	0.3	6.9	-0.3	-2.50
	594	8.6	2.1	-0.0	8.7	2.1	-4.53
	593	5.0	1.5	-0.3	5.2	0.9	-10.80
Min	Cent	-2.6	-5.1	-1.5	-0.7	-5.1	-65.06
	586	-4.2	-6.2	-1.3	-1.1	-6.3	-75.81
	587	-1.1	-6.6	-1.4	-0.5	-6.6	-35.42
	594	-0.8	-3.8	-1.5	0.3	-3.8	-47.58
	593	-4.5	-4.1	-1.5	-0.7	-4.8	-74.08

	NODE	Vxx	Vyy
Max	Cent	-4.9	0.5
	586	-4.6	0.1
	587	-4.6	0.8
	594	-5.0	0.8
	593	-5.0	0.1
Min	Cent	-8.6	-5.2
	586	-7.7	-5.1
	587	-7.7	-5.3
	594	-9.4	-5.3
	593	-9.4	-5.1

LC		NODE	Fxx	Fyy	Fxy	Fmax	Fmin	ANGLE
RC ENV~2	Max	Cent	-0.6	0.5	-0.0	0.6	-0.6	-76.26
		586	-0.6	0.7	-0.0	0.7	-0.6	-82.74
		587	-0.6	0.4	-0.0	0.5	-0.6	-75.26
		594	-0.5	0.4	-0.0	0.5	-0.5	-75.80
		593	-0.5	0.7	-0.0	0.7	-0.5	-82.84
	Min	Cent	-1.4	0.2	-0.5	0.2	-1.5	-83.14
		586	-1.4	0.2	-0.5	0.3	-1.5	-77.93
		587	-1.4	0.1	-0.5	0.1	-1.5	-82.01
		594	-1.4	0.1	-0.5	0.1	-1.6	-81.99
		593	-1.4	0.2	-0.5	0.3	-1.5	-78.17

	NODE	Mxx	Myy	Mxy	Mmax	Mmin	ANGLE
Max	Cent	3.8	-0.4	-0.4	3.9	-0.6	-6.88
	586	1.7	-0.8	-0.4	1.8	-1.2	-8.66
	587	4.8	-0.9	-0.1	4.8	-1.0	-2.54
	594	6.2	0.2	-0.4	6.2	0.0	-5.37
	593	2.5	0.2	-0.6	2.7	-0.7	-15.69
Min	Cent	0.9	-3.3	-0.8	1.0	-3.3	-10.11
	586	-0.8	-4.1	-0.8	-0.7	-4.1	-14.42
	587	2.0	-4.3	-0.6	2.0	-4.3	-4.33
	594	2.8	-2.4	-0.9	2.9	-2.4	-7.59
	593	-0.5	-2.6	-1.2	-0.1	-2.7	-25.26

	NODE	Vxx	Vyy
Max	Cent	-5.5	-1.6
	586	-5.1	-1.5
	587	-5.1	-1.7
	594	-5.8	-1.7
	593	-5.8	-1.5
Min	Cent	-6.5	-3.6
	586	-5.9	-3.5
	587	-5.9	-3.7
	594	-7.1	-3.7
	593	-7.1	-3.5

ELEM	MAT	SEC	LC		NODE	Fxx	Fyy	Fxy	Fmax	Fmin	ANGLE
554	1	1	SX (RS)		Cent	1.0	1.1	0.5	1.6	0.5	50.01
					587	0.7	1.0	0.5	1.4	0.3	52.90
					221	0.7	1.3	0.5	1.6	0.4	60.90
					224	1.3	1.3	0.5	1.8	0.8	46.75
					594	1.3	1.0	0.5	1.7	0.6	37.29

	NODE	Mxx	Myy	Mxy	Mmax	Mmin	ANGLE
	Cent	3.7	1.0	0.6	3.8	0.8	12.66

587	3.7	0.6	0.3	3.7	0.6	5.11
221	2.7	1.3	0.7	3.0	1.0	22.79
224	4.2	1.4	1.0	4.5	1.1	18.31
594	4.2	0.7	0.6	4.3	0.6	9.39

NODE	Vxx	Vyy
Cent	1.2	0.1
587	2.1	0.1
221	2.1	0.3
224	0.4	0.3
594	0.4	0.1

LC		NODE	Fxx	Fyy	Fxy	Fmax	Fmin	ANGLE
SY (RS)		Cent	0.4	1.1	1.7	2.5	-1.0	50.48
		587	0.1	0.8	1.7	2.2	-1.3	50.91
		221	0.1	1.3	1.7	2.5	-1.1	54.41
		224	0.7	1.3	1.7	2.7	-0.8	50.01
		594	0.7	0.8	1.7	2.5	-1.0	46.30

	NODE	Mxx	Myy	Mxy	Mmax	Mmin	ANGLE
	Cent	0.6	1.3	0.9	1.9	0.0	55.19
	587	0.2	0.6	0.8	1.2	-0.5	51.45
	221	0.3	0.5	0.9	1.3	-0.5	47.92
	224	1.2	2.1	1.0	2.7	0.6	57.77
	594	0.9	2.0	0.9	2.5	0.4	61.82

NODE	Vxx	Vyy
Cent	0.4	2.7
587	0.4	2.6
221	0.4	2.9
224	0.6	2.9
594	0.6	2.6

LC		NODE	Fxx	Fyy	Fxy	Fmax	Fmin	ANGLE
RC ENV~1	Max	Cent	0.4	1.6	1.5	2.3	0.3	59.56
		587	0.2	1.4	1.5	2.1	0.2	58.88
		221	0.2	1.8	1.5	2.5	0.2	62.02
		224	0.5	1.8	1.5	2.5	0.5	60.18
		594	0.5	1.4	1.5	2.2	0.4	56.79
	Min	Cent	-1.7	-0.7	-1.9	-0.3	-2.7	-59.56
		587	-1.2	-0.6	-1.9	-0.1	-2.4	-55.47
		221	-1.2	-0.9	-1.9	-0.3	-2.6	-48.98
		224	-2.2	-0.9	-1.9	-0.6	-3.1	-63.21
		594	-2.2	-0.6	-1.9	-0.3	-2.9	-67.22

	NODE	Mxx	Myy	Mxy	Mmax	Mmin	ANGLE
Max	Cent	10.1	1.3	0.8	10.1	1.2	2.36
	587	6.8	-0.3	0.4	6.8	-0.3	-0.24
	221	10.5	0.9	1.2	10.5	0.9	3.98
	224	14.4	3.1	1.4	14.4	3.0	4.08
	594	8.8	2.2	0.4	8.8	2.1	0.69
Min	Cent	1.5	-4.6	-1.1	1.8	-4.6	-17.57
	587	-0.6	-6.5	-1.3	-0.2	-6.5	-28.35
	221	3.6	-5.7	-1.0	3.7	-5.8	-8.20
	224	3.5	-2.9	-1.1	3.8	-2.9	-14.41
	594	-0.4	-3.7	-1.3	0.6	-3.7	-42.89

NODE	Vxx	Vyy
Max Cent	-4.8	0.9
587	-3.3	0.8
221	-3.3	0.9
224	-6.1	0.9
594	-6.1	0.8
Min Cent	-8.4	-5.2
587	-7.7	-5.3
221	-7.7	-5.2
224	-9.6	-5.2
594	-9.6	-5.3

LC		NODE	Fxx	Fyy	Fxy	Fmax	Fmin	ANGLE
RC ENV~2	Max	Cent	-0.4	0.5	-0.0	0.6	-0.4	-73.19
		587	-0.4	0.4	-0.0	0.6	-0.4	-69.39
		221	-0.4	0.5	-0.0	0.7	-0.4	-68.58
		224	-0.4	0.5	-0.0	0.6	-0.4	-75.01
		594	-0.4	0.4	-0.0	0.5	-0.4	-75.41
	Min	Cent	-1.2	0.0	-0.5	0.1	-1.3	-78.56
		587	-0.8	0.1	-0.5	0.2	-1.0	-79.77
		221	-0.8	-0.1	-0.5	-0.0	-1.0	-74.70
		224	-1.5	-0.1	-0.5	-0.0	-1.7	-77.04
		594	-1.5	0.1	-0.5	0.2	-1.7	-80.92

	NODE	Mxx	Myy	Mxy	Mmax	Mmin	ANGLE
Max	Cent	7.4	0.0	0.4	7.4	0.0	1.78
	587	4.9	-0.9	0.1	4.9	-0.9	-0.87
	221	7.8	-0.3	0.8	7.8	-0.3	3.47
	224	10.6	1.1	0.9	10.6	1.1	3.56
	594	6.3	0.2	0.2	6.3	0.2	-0.05
Min	Cent	4.4	-2.9	-0.3	4.4	-2.9	-0.94
	587	2.3	-4.3	-0.5	2.3	-4.3	-2.34
	221	5.6	-3.7	-0.1	5.6	-3.7	0.67
	224	6.8	-1.6	-0.1	6.8	-1.7	0.12
	594	3.1	-2.3	-0.5	3.1	-2.3	-3.64

	NODE	Vxx	Vyy
Max	Cent	-5.7	-1.8
	587	-4.8	-1.7
	221	-4.8	-1.9
	224	-6.3	-1.9
	594	-6.3	-1.7
Min	Cent	-6.4	-3.7
	587	-5.9	-3.7
	221	-5.9	-3.7
	224	-7.3	-3.7
	594	-7.3	-3.7

ELEM	MAT	SEC	LC		NODE	Fxx	Fyy	Fxy	Fmax	Fmin	ANGLE
555	1	1	SX (RS)		Cent	0.3	0.3	1.0	1.3	-0.6	45.65
					544	0.5	0.1	1.0	1.3	-0.7	38.47
					588	0.5	0.7	1.0	1.6	-0.4	48.36
					595	1.0	0.7	1.0	1.8	-0.1	41.07
					552	1.0	0.1	1.0	1.6	-0.5	32.00

	NODE	Mxx	Myy	Mxy	Mmax	Mmin	ANGLE
	Cent	0.4	0.2	1.0	1.2	-0.7	41.40
	544	2.0	0.4	0.2	2.0	0.4	5.79
	588	1.9	1.3	1.4	3.1	0.1	39.44
	595	6.3	3.1	1.4	6.9	2.6	20.62
	552	9.1	1.8	0.2	9.1	1.8	1.74

	NODE	Vxx	Vyy
	Cent	13.0	3.4
	544	1.1	0.0
	588	1.1	6.8
	595	25.8	6.8
	552	25.8	0.0

LC		NODE	Fxx	Fyy	Fxy	Fmax	Fmin	ANGLE
SY (RS)		Cent	0.9	3.3	1.4	3.9	0.3	65.44
		544	0.3	4.5	1.4	4.9	-0.1	73.35
		588	0.3	2.1	1.4	2.8	-0.4	61.31
		595	1.5	2.1	1.4	3.2	0.4	50.91
		552	1.5	4.5	1.4	5.0	1.0	68.76

	NODE	Mxx	Myy	Mxy	Mmax	Mmin	ANGLE
	Cent	2.3	4.9	0.7	5.1	2.1	74.91
	544	2.0	2.0	0.6	2.6	1.4	43.65
	588	1.7	3.4	0.6	3.6	1.5	71.81
	595	0.7	5.5	0.6	5.6	0.6	83.38

552	6.3	8.7	0.5	8.8	6.2	77.65

NODE	Vxx	Vyy
Cent	6.3	8.1
544	1.1	11.3
588	1.1	5.0
595	11.4	5.0
552	11.4	11.3

LC		NODE	Fxx	Fyy	Fxy	Fmax	Fmin	ANGLE
RC ENV~1	Max	Cent	-0.1	4.1	1.4	4.5	-0.5	73.10
		544	-0.5	5.2	1.4	5.5	-0.8	77.50
		588	-0.5	2.9	1.4	3.4	-0.8	71.08
		595	0.6	2.9	1.4	3.5	-0.1	65.08
		552	0.6	5.2	1.4	5.6	0.2	74.77
	Min	Cent	-2.7	-2.4	-1.3	-0.8	-3.5	-38.79
		544	-2.9	-3.7	-1.3	-0.7	-4.3	-24.26
		588	-2.9	-1.2	-1.3	0.1	-2.9	-45.73
		595	-2.5	-1.2	-1.3	-0.4	-3.3	-56.95
		552	-2.5	-3.7	-1.3	-1.6	-4.5	-32.50

	NODE	Mxx	Myy	Mxy	Mmax	Mmin	ANGLE
Max	Cent	7.1	4.8	0.7	7.5	2.8	-13.75
	544	4.9	-0.4	-0.3	5.7	-0.5	-15.15
	588	3.7	2.0	1.3	3.9	0.7	-10.34
	595	8.4	7.5	1.7	8.5	6.1	-27.60
	552	13.3	10.1	0.1	13.7	9.3	-12.96
Min	Cent	-1.7	-5.0	-3.8	-1.4	-5.3	-16.01
	544	-2.4	-6.3	-4.5	-1.6	-8.5	-28.54
	588	-2.7	-5.3	-3.4	-2.4	-6.8	-17.04
	595	-5.6	-3.6	-3.0	-0.9	-5.9	-76.68
	552	-6.1	-7.3	-4.1	-3.1	-7.5	-14.06

	NODE	Vxx	Vyy
Max	Cent	15.7	2.2
	544	2.9	5.2
	588	2.9	1.0
	595	29.9	1.0
	552	29.9	5.2
Min	Cent	-10.4	-16.1
	544	0.1	-17.3
	588	0.1	-16.3
	595	-21.7	-16.3
	552	-21.7	-17.3

LC		NODE	Fxx	Fyy	Fxy	Fmax	Fmin	ANGLE
RC ENV~2	Max	Cent	-0.7	1.3	0.1	1.3	-0.7	88.02
		544	-0.6	1.3	0.1	1.3	-0.6	88.10
		588	-0.6	1.4	0.1	1.4	-0.6	-89.50
		595	-0.8	1.4	0.1	1.4	-0.8	-89.50
		552	-0.8	1.3	0.1	1.3	-0.8	87.94
	Min	Cent	-1.9	0.7	-0.1	0.7	-1.9	-88.55
		544	-2.0	0.6	-0.1	0.6	-2.0	-88.42
		588	-2.0	0.7	-0.1	0.7	-2.0	86.96
		595	-1.8	0.7	-0.1	0.7	-1.8	86.56
		552	-1.8	0.6	-0.1	0.6	-1.8	-88.51

	NODE	Mxx	Myy	Mxy	Mmax	Mmin	ANGLE
Max	Cent	4.7	0.5	-0.1	4.9	0.3	-13.04
	544	3.2	-2.4	-0.9	3.7	-2.7	-14.95
	588	2.3	-1.2	0.0	2.4	-1.2	-9.54
	595	5.6	4.4	0.5	5.6	4.4	-28.26
	552	9.1	3.4	-0.4	9.4	3.1	-12.33
Min	Cent	0.6	-1.4	-2.4	0.6	-2.6	-17.74
	544	-0.5	-4.4	-3.0	-0.2	-5.8	-21.72
	588	-0.9	-3.6	-2.2	-0.9	-4.5	-10.17
	595	0.5	0.9	-1.8	1.4	-0.2	-53.33
	552	2.7	0.8	-2.7	2.9	-0.7	-18.58

NODE	Vxx	Vyy

Max	Cent	5.5	-5.8	
	544	2.1	-6.0	
	588	2.1	-5.5	
	595	9.3	-5.5	
	552	9.3	-6.0	
Min	Cent	0.6	-11.4	
	544	0.6	-11.3	
	588	0.6	-11.5	
	595	-0.0	-11.5	
	552	-0.0	-11.3	

ELEM	MAT	SEC	LC		NODE	Fxx	Fyy	Fxy	Fmax	Fmin	ANGLE
556	1	1	SX (RS)		Cent	1.4	0.5	1.4	2.4	-0.5	36.20
					588	0.6	1.1	1.4	2.2	-0.6	50.01
					589	0.6	0.1	1.4	1.7	-1.0	40.51
					596	2.4	0.1	1.4	3.0	-0.5	25.34
					595	2.4	1.1	1.4	3.2	0.2	32.08

	NODE	Mxx	Myy	Mxy	Mmax	Mmin	ANGLE
	Cent	3.4	0.8	0.3	3.4	0.7	7.12
	588	2.2	1.3	0.1	2.2	1.3	6.42
	589	3.0	0.4	0.5	3.1	0.3	11.36
	596	3.0	1.1	0.5	3.1	1.0	13.96
	595	5.6	3.0	0.2	5.6	3.0	3.32

	NODE	Vxx	Vyy
	Cent	2.2	4.4
	588	1.3	6.8
	589	1.3	1.9
	596	4.5	1.9
	595	4.5	6.8

LC		NODE	Fxx	Fyy	Fxy	Fmax	Fmin	ANGLE
SY (RS)		Cent	0.5	1.1	2.2	3.0	-1.4	49.09
		588	0.2	2.3	2.2	3.7	-1.2	58.21
		589	0.2	0.3	2.2	2.4	-2.0	46.00
		596	1.1	0.3	2.2	2.9	-1.5	39.71
		595	1.1	2.3	2.2	4.0	-0.5	52.70

	NODE	Mxx	Myy	Mxy	Mmax	Mmin	ANGLE
	Cent	0.6	3.6	0.3	3.7	0.6	84.47
	588	1.2	3.3	0.5	3.4	1.0	76.71
	589	0.2	2.6	0.6	2.7	0.1	77.11
	596	1.3	2.5	0.1	2.5	1.2	83.99
	595	2.9	6.3	0.1	6.3	2.9	87.53

	NODE	Vxx	Vyy
	Cent	4.1	2.6
	588	2.2	5.0
	589	2.2	0.3
	596	6.0	0.3
	595	6.0	5.0

LC		NODE	Fxx	Fyy	Fxy	Fmax	Fmin	ANGLE
RC ENV~1	Max	Cent	0.4	2.0	2.2	3.3	-0.6	59.43
		588	-0.4	3.2	2.2	4.1	-1.1	65.99
		589	-0.4	1.9	2.2	2.6	-1.1	57.12
		596	1.4	1.9	2.2	2.9	-0.2	51.34
		595	1.4	3.2	2.2	4.3	0.2	62.00
	Min	Cent	-2.8	-0.3	-2.2	0.8	-3.1	-67.55
		588	-2.7	-1.5	-2.2	0.6	-3.5	-58.26
		589	-2.7	0.5	-2.2	1.0	-2.7	-87.19
		596	-3.3	0.5	-2.2	1.0	-3.7	-86.70
		595	-3.3	-1.5	-2.2	0.3	-4.0	-69.67

	NODE	Mxx	Myy	Mxy	Mmax	Mmin	ANGLE
Max	Cent	1.6	3.7	0.6	3.8	0.8	83.75
	588	3.0	1.8	0.8	3.0	-0.3	-1.96

		589	0.2	2.1	0.6	2.2	-0.5	82.55
		596	-0.7	3.0	0.7	3.0	-0.9	86.64
		595	6.4	8.0	0.5	8.1	5.8	84.58
	Min	Cent	-5.4	-3.5	-2.4	-2.6	-5.4	-1.36
		588	-3.4	-5.3	-2.4	-2.7	-6.2	80.33
		589	-5.7	-4.2	-2.5	-2.5	-5.8	-44.27
		596	-6.8	-2.0	-2.4	-2.0	-6.8	88.77
		595	-5.8	-4.5	-2.4	-3.0	-5.8	8.75

		NODE	Vxx	Vyy
	Max	Cent	10.9	0.4
		588	7.2	1.0
		589	7.2	-0.3
		596	14.6	-0.3
		595	14.6	1.0
	Min	Cent	0.3	-11.9
		588	0.8	-16.3
		589	0.8	-7.9
		596	-0.1	-7.9
		595	-0.1	-16.3

LC		NODE	Fxx	Fyy	Fxy	Fmax	Fmin	ANGLE
RC ENV~2	Max	Cent	-0.7	1.4	0.2	1.4	-0.7	-89.12
		588	-0.8	1.4	0.2	1.4	-0.9	-89.15
		589	-0.8	1.4	0.2	1.4	-0.9	86.98
		596	-0.5	1.4	0.2	1.4	-0.5	87.09
		595	-0.5	1.4	0.2	1.4	-0.5	-89.08
	Min	Cent	-2.0	0.7	-0.1	0.8	-2.0	85.29
		588	-2.0	0.7	-0.1	0.7	-2.0	84.94
		589	-2.0	0.8	-0.1	0.8	-2.0	-87.72
		596	-2.1	0.8	-0.1	0.8	-2.1	-87.38
		595	-2.1	0.7	-0.1	0.7	-2.1	85.33

		NODE	Mxx	Myy	Mxy	Mmax	Mmin	ANGLE
	Max	Cent	0.7	0.7	0.4	1.2	0.6	-28.91
		588	1.7	-1.3	0.4	1.7	-1.6	-0.22
		589	-0.8	-0.2	0.2	-0.2	-1.0	-29.12
		596	-1.6	1.6	0.3	1.6	-2.0	-89.58
		595	4.1	4.2	0.5	4.4	4.0	-32.62
	Min	Cent	-2.1	-1.5	-1.4	-0.4	-2.6	-58.33
		588	-1.4	-3.6	-1.5	-1.2	-4.1	42.00
		589	-2.8	-2.7	-1.6	-1.1	-3.8	-54.90
		596	-3.8	-0.5	-1.5	-0.0	-3.8	-74.80
		595	-0.4	0.8	-1.5	1.1	-0.5	-63.13

		NODE	Vxx	Vyy
	Max	Cent	7.9	-3.8
		588	5.2	-5.5
		589	5.2	-2.1
		596	10.5	-2.1
		595	10.5	-5.5
	Min	Cent	3.7	-8.3
		588	2.7	-11.5
		589	2.7	-5.4
		596	4.7	-5.4
		595	4.7	-11.5

ELEM	MAT	SEC	LC		NODE	Fxx	Fyy	Fxy	Fmax	Fmin	ANGLE
557	1	1	SX (RS)		Cent	1.5	0.2	0.7	1.8	-0.2	23.92
					589	1.2	0.1	0.7	1.6	-0.3	26.29
					590	1.2	0.3	0.7	1.6	-0.1	28.39
					597	1.8	0.3	0.7	2.1	-0.0	21.84
					596	1.8	0.1	0.7	2.1	-0.2	20.41

		NODE	Mxx	Myy	Mxy	Mmax	Mmin	ANGLE
		Cent	2.5	0.7	0.5	2.6	0.6	15.42
		589	2.7	0.4	0.5	2.8	0.3	12.18
		590	2.5	0.7	0.4	2.6	0.6	11.90
		597	2.2	1.0	0.5	2.4	0.8	19.41
		596	2.9	1.1	0.6	3.1	0.9	17.23

	NODE	Vxx	Vyy
	Cent	2.5	1.5
	589	2.0	1.9
	590	2.0	1.0
	597	2.9	1.0
	596	2.9	1.9

LC		NODE	Fxx	Fyy	Fxy	Fmax	Fmin	ANGLE
SY (RS)		Cent	0.2	0.3	1.6	1.8	-1.3	45.45
		589	0.3	0.3	1.6	1.9	-1.3	44.88
		590	0.3	0.3	1.6	1.9	-1.3	44.57
		597	0.2	0.3	1.6	1.8	-1.4	46.09
		596	0.2	0.3	1.6	1.8	-1.3	46.40

	NODE	Mxx	Myy	Mxy	Mmax	Mmin	ANGLE
	Cent	0.3	2.1	0.1	2.1	0.3	85.54
	589	0.3	2.7	0.2	2.7	0.3	86.19
	590	0.6	1.5	0.1	1.5	0.6	84.85
	597	0.6	1.8	0.4	1.9	0.5	74.00
	596	0.4	2.6	0.2	2.7	0.3	84.19

	NODE	Vxx	Vyy
	Cent	0.6	0.5
	589	1.1	0.3
	590	1.1	0.6
	597	0.1	0.6
	596	0.1	0.3

LC		NODE	Fxx	Fyy	Fxy	Fmax	Fmin	ANGLE
RC ENV~1	Max	Cent	0.5	1.9	1.6	2.0	-0.0	60.16
		589	0.2	2.0	1.6	2.1	-0.3	59.90
		590	0.2	1.9	1.6	2.1	-0.2	59.59
		597	0.8	1.9	1.6	2.0	0.2	60.48
		596	0.8	2.0	1.6	2.1	0.1	60.78
	Min	Cent	-2.7	0.6	-1.6	0.8	-2.7	-77.85
		589	-2.7	0.5	-1.6	0.9	-2.7	-77.20
		590	-2.7	0.5	-1.6	0.8	-2.7	-76.51
		597	-2.8	0.5	-1.6	0.7	-2.9	-78.45
		596	-2.8	0.5	-1.6	0.9	-2.9	-78.97

	NODE	Mxx	Myy	Mxy	Mmax	Mmin	ANGLE
Max	Cent	-1.3	2.0	0.3	2.0	-1.4	-88.70
	589	-0.5	2.1	0.4	2.1	-0.7	89.87
	590	-1.7	0.9	0.1	0.9	-1.7	-86.63
	597	-2.4	1.6	0.1	1.6	-2.4	-89.63
	596	-0.3	3.2	0.4	3.2	-0.5	89.82
Min	Cent	-6.3	-2.9	-2.5	-2.2	-6.4	-78.04
	589	-5.8	-4.3	-2.4	-3.0	-5.9	-55.76
	590	-6.7	-4.8	-2.3	-2.2	-6.8	-56.00
	597	-6.8	-2.0	-2.6	-1.8	-6.9	-77.19
	596	-6.2	-2.1	-2.7	-1.9	-6.3	-75.29

	NODE	Vxx	Vyy
Max	Cent	5.7	-0.1
	589	5.4	-0.3
	590	5.4	-0.0
	597	6.1	-0.0
	596	6.1	-0.3
Min	Cent	-0.5	-6.8
	589	-0.2	-7.9
	590	-0.2	-5.6
	597	-0.8	-5.6
	596	-0.8	-7.9

LC		NODE	Fxx	Fyy	Fxy	Fmax	Fmin	ANGLE
RC ENV~2	Max	Cent	-0.9	1.4	0.1	1.4	-0.9	88.41
		589	-0.9	1.4	0.1	1.4	-0.9	88.44
		590	-0.9	1.4	0.1	1.4	-0.9	-89.53

597	-0.8	1.4	0.1	1.4	-0.8	-89.51
596	-0.8	1.4	0.1	1.4	-0.8	88.43
Min Cent	-2.0	0.8	-0.1	0.8	-2.0	-88.65
589	-2.0	0.8	-0.1	0.8	-2.0	-88.68
590	-2.0	0.7	-0.1	0.7	-2.0	87.52
597	-1.9	0.7	-0.1	0.7	-1.9	87.51
596	-1.9	0.8	-0.1	0.8	-1.9	-88.60

NODE	Mxx	Myy	Mxy	Mmax	Mmin	ANGLE
Max Cent	-2.0	0.1	-0.2	0.1	-2.8	-77.11
589	-1.3	-0.3	-0.0	-0.3	-1.7	-88.38
590	-2.9	-0.4	-0.3	-0.4	-3.8	-85.50
597	-2.5	0.2	-0.4	0.4	-3.6	-77.78
596	-0.8	1.8	-0.1	1.9	-1.5	-79.31
Min Cent	-3.8	-1.9	-1.6	-0.7	-3.8	-65.61
589	-3.2	-2.8	-1.6	-1.1	-4.0	-57.01
590	-4.2	-3.1	-1.5	-1.6	-4.5	-64.00
597	-4.7	-1.3	-1.7	-0.4	-4.8	-71.49
596	-3.4	-0.4	-1.7	0.3	-3.4	-68.15

NODE	Vxx	Vyy
Max Cent	4.1	-1.5
589	3.8	-2.1
590	3.8	-1.0
597	4.3	-1.0
596	4.3	-2.1
Min Cent	1.2	-4.6
589	1.2	-5.4
590	1.2	-3.7
597	1.2	-3.7
596	1.2	-5.4

ELEM	MAT	SEC	LC	NODE	Fxx	Fyy	Fxy	Fmax	Fmin	ANGLE
558	1	1	SX (RS)	Cent	1.6	0.3	0.5	1.7	0.1	17.95
				590	1.4	0.2	0.5	1.6	0.0	18.69
				591	1.4	0.3	0.5	1.6	0.2	20.35
				598	1.7	0.3	0.5	1.8	0.2	17.25
				597	1.7	0.2	0.5	1.8	0.1	16.00

NODE	Mxx	Myy	Mxy	Mmax	Mmin	ANGLE
Cent	2.5	0.8	0.2	2.5	0.8	8.07
590	2.4	0.7	0.3	2.5	0.6	9.97
591	2.8	0.8	0.2	2.8	0.8	6.08
598	2.7	1.0	0.2	2.7	0.9	4.99
597	2.2	1.0	0.3	2.3	0.9	10.99

NODE	Vxx	Vyy
Cent	2.1	0.7
590	2.0	1.0
591	2.0	0.4
598	2.2	0.4
597	2.2	1.0

LC	NODE	Fxx	Fyy	Fxy	Fmax	Fmin	ANGLE
SY (RS)	Cent	0.2	0.3	1.7	1.9	-1.4	45.44
	590	0.2	0.3	1.7	1.9	-1.4	45.58
	591	0.2	0.3	1.7	1.9	-1.4	45.74
	598	0.3	0.3	1.7	2.0	-1.4	45.15
	597	0.3	0.3	1.7	1.9	-1.4	45.00

NODE	Mxx	Myy	Mxy	Mmax	Mmin	ANGLE
Cent	0.3	1.5	0.2	1.5	0.3	80.69
590	0.2	1.5	0.1	1.6	0.2	85.35
591	0.4	1.1	0.1	1.1	0.4	79.98
598	0.4	1.4	0.3	1.5	0.4	73.92
597	0.1	1.9	0.3	1.9	0.1	80.81

NODE	Vxx	Vyy
Cent	0.3	0.6

		590	0.2	0.6
		591	0.2	0.5
		598	0.4	0.5
		597	0.4	0.6

LC		NODE	Fxx	Fyy	Fxy	Fmax	Fmin	ANGLE
RC ENV~1	Max	Cent	0.5	1.8	1.7	2.1	0.3	59.80
		590	0.4	1.8	1.7	2.1	0.1	59.93
		591	0.4	1.8	1.7	2.1	0.2	59.97
		598	0.7	1.8	1.7	2.1	0.4	59.56
		597	0.7	1.8	1.7	2.1	0.3	59.53
	Min	Cent	-2.7	0.5	-1.7	0.6	-2.7	-81.85
		590	-2.7	0.6	-1.7	0.7	-2.7	-81.69
		591	-2.7	0.5	-1.7	0.5	-2.7	-81.29
		598	-2.8	0.5	-1.7	0.5	-2.8	-82.00
		597	-2.8	0.6	-1.7	0.7	-2.8	-82.34

		NODE	Mxx	Myy	Mxy	Mmax	Mmin	ANGLE
	Max	Cent	-1.8	1.1	-0.3	1.1	-1.8	-86.06
		590	-1.9	0.9	-0.2	1.0	-1.9	-85.55
		591	-1.3	0.6	-0.4	0.6	-1.4	-83.82
		598	-1.6	1.2	-0.3	1.2	-1.7	-86.54
		597	-2.1	1.8	-0.2	1.8	-2.2	-87.90
	Min	Cent	-6.7	-3.5	-2.1	-1.6	-6.8	-75.51
		590	-6.7	-4.8	-2.2	-2.2	-6.8	-56.13
		591	-7.0	-5.0	-1.9	-2.6	-7.1	-59.48
		598	-6.9	-2.3	-2.0	-1.3	-7.0	-75.12
		597	-6.6	-2.0	-2.3	-1.8	-6.7	-73.71

		NODE	Vxx	Vyy
	Max	Cent	1.9	-0.2
		590	1.8	-0.0
		591	1.8	-0.3
		598	2.0	-0.3
		597	2.0	-0.0
	Min	Cent	-2.3	-5.3
		590	-2.2	-5.6
		591	-2.2	-5.1
		598	-2.4	-5.1
		597	-2.4	-5.6

LC		NODE	Fxx	Fyy	Fxy	Fmax	Fmin	ANGLE
RC ENV~2	Max	Cent	-1.0	1.3	0.1	1.3	-1.0	-88.98
		590	-1.0	1.3	0.1	1.3	-1.0	89.27
		591	-1.0	1.3	0.1	1.3	-1.0	-88.98
		598	-1.0	1.3	0.1	1.3	-1.0	-88.99
		597	-1.0	1.3	0.1	1.3	-1.0	89.27
	Min	Cent	-2.0	0.7	-0.1	0.7	-2.0	88.54
		590	-2.0	0.7	-0.1	0.7	-2.0	-88.23
		591	-2.0	0.7	-0.1	0.7	-2.0	88.52
		598	-2.0	0.7	-0.1	0.7	-2.0	88.50
		597	-2.0	0.7	-0.1	0.7	-2.0	-88.23

		NODE	Mxx	Myy	Mxy	Mmax	Mmin	ANGLE
	Max	Cent	-2.4	-0.2	-0.5	-0.1	-3.5	-82.53
		590	-2.9	-0.4	-0.5	-0.4	-4.0	-82.83
		591	-2.6	-0.4	-0.6	-0.3	-3.6	-81.11
		598	-1.9	0.1	-0.6	0.4	-3.0	-74.81
		597	-2.2	0.3	-0.5	0.6	-3.2	-76.71
	Min	Cent	-4.4	-2.3	-1.4	-1.1	-4.5	-68.01
		590	-4.3	-3.1	-1.5	-1.6	-4.5	-43.61
		591	-4.4	-3.3	-1.3	-2.0	-4.6	-44.32
		598	-4.5	-1.5	-1.4	-0.7	-4.6	-70.75
		597	-4.5	-1.2	-1.5	-0.3	-4.5	-68.25

		NODE	Vxx	Vyy
	Max	Cent	1.0	-0.9
		590	0.9	-1.0
		591	0.9	-0.8
		598	1.0	-0.8
		597	1.0	-1.0

Min	Cent	-0.8	-3.5	
	590	-0.8	-3.7	
	591	-0.8	-3.4	
	598	-0.9	-3.4	
	597	-0.9	-3.7	

ELEM	MAT	SEC	LC		NODE	Fxx	Fyy	Fxy	Fmax	Fmin	ANGLE
559	1	1	SX (RS)		Cent	1.7	0.4	0.4	1.8	0.3	15.40
					591	1.6	0.3	0.4	1.7	0.2	15.95
					592	1.6	0.5	0.4	1.7	0.4	18.11
					599	1.9	0.5	0.4	2.0	0.4	14.87
					598	1.9	0.3	0.4	1.9	0.2	13.33

	NODE	Mxx	Myy	Mxy	Mmax	Mmin	ANGLE
	Cent	3.1	1.0	0.2	3.1	1.0	5.26
	591	2.8	0.8	0.2	2.8	0.8	5.32
	592	3.6	1.0	0.2	3.6	0.9	5.28
	599	3.5	1.3	0.2	3.6	1.3	5.57
	598	2.6	0.9	0.1	2.6	0.9	4.75

	NODE	Vxx	Vyy
	Cent	1.9	0.5
	591	1.9	0.4
	592	1.9	0.7
	599	2.0	0.7
	598	2.0	0.4

LC		NODE	Fxx	Fyy	Fxy	Fmax	Fmin	ANGLE
SY (RS)		Cent	0.4	0.2	1.8	2.1	-1.5	43.69
		591	0.3	0.3	1.8	2.1	-1.5	44.63
		592	0.3	0.2	1.8	2.1	-1.6	44.02
		599	0.5	0.2	1.8	2.2	-1.5	42.71
		598	0.5	0.3	1.8	2.2	-1.5	43.33

	NODE	Mxx	Myy	Mxy	Mmax	Mmin	ANGLE
	Cent	0.3	1.3	0.3	1.3	0.2	76.37
	591	0.2	1.1	0.2	1.2	0.2	78.84
	592	0.4	1.2	0.2	1.2	0.3	75.73
	599	0.4	1.5	0.3	1.5	0.3	73.92
	598	0.2	1.4	0.3	1.5	0.2	76.90

	NODE	Vxx	Vyy
	Cent	0.2	0.5
	591	0.2	0.5
	592	0.2	0.5
	599	0.3	0.5
	598	0.3	0.5

LC		NODE	Fxx	Fyy	Fxy	Fmax	Fmin	ANGLE
RC ENV~1	Max	Cent	0.6	1.7	1.8	2.1	0.4	57.81
		591	0.5	1.7	1.8	2.2	0.3	58.44
		592	0.5	1.6	1.8	2.1	0.4	57.67
		599	0.7	1.6	1.8	2.1	0.6	57.13
		598	0.7	1.7	1.8	2.2	0.5	57.92
	Min	Cent	-3.1	0.4	-1.9	0.5	-3.1	-82.26
		591	-2.9	0.5	-1.9	0.6	-2.9	-82.08
		592	-2.9	0.3	-1.9	0.4	-2.9	-81.48
		599	-3.2	0.3	-1.9	0.3	-3.2	-82.44
		598	-3.2	0.5	-1.9	0.6	-3.2	-82.92

		NODE	Mxx	Myy	Mxy	Mmax	Mmin	ANGLE
	Max	Cent	-0.4	1.1	-0.5	1.2	-0.6	-83.83
		591	-1.3	0.6	-0.5	0.6	-1.5	-83.53
		592	0.8	0.9	-0.5	1.3	0.2	-42.70
		599	0.7	1.8	-0.4	1.9	0.5	-66.41
		598	-1.7	1.2	-0.4	1.3	-1.8	-86.06
	Min	Cent	-6.6	-3.5	-1.7	-1.8	-6.8	-61.82
		591	-7.0	-5.0	-1.8	-2.7	-7.1	-59.99

592	-6.4	-4.8	-1.7	-2.4	-6.6	-52.13
599	-6.4	-1.9	-1.6	-0.8	-6.5	-80.21
598	-6.9	-2.3	-1.8	-1.3	-7.0	-73.70

	NODE	Vxx	Vyy
Max	Cent	-0.4	-0.5
	591	-0.5	-0.3
	592	-0.5	-0.5
	599	-0.4	-0.5
	598	-0.4	-0.3
Min	Cent	-4.3	-5.5
	591	-4.2	-5.1
	592	-4.2	-5.9
	599	-4.5	-5.9
	598	-4.5	-5.1

LC		NODE	Fxx	Fyy	Fxy	Fmax	Fmin	ANGLE
RC ENV~2	Max	Cent	-0.8	1.2	0.1	1.2	-0.8	-86.81
		591	-0.8	1.3	0.1	1.3	-0.8	-86.74
		592	-0.8	1.2	0.1	1.2	-0.8	-86.67
		599	-0.8	1.2	0.1	1.2	-0.8	-86.88
		598	-0.8	1.3	0.1	1.3	-0.8	-86.94
	Min	Cent	-2.2	0.6	-0.2	0.6	-2.2	89.90
		591	-2.1	0.7	-0.2	0.7	-2.1	89.91
		592	-2.1	0.6	-0.2	0.6	-2.1	89.90
		599	-2.3	0.6	-0.2	0.6	-2.3	89.90
		598	-2.3	0.7	-0.2	0.7	-2.3	89.90

	NODE	Mxx	Myy	Mxy	Mmax	Mmin	ANGLE
Max	Cent	-1.5	0.0	-0.7	0.2	-2.6	-78.24
	591	-2.6	-0.4	-0.7	-0.2	-3.6	-79.38
	592	-1.1	-0.1	-0.8	0.2	-2.4	-73.60
	599	-0.4	0.7	-0.7	1.2	-1.4	-68.83
	598	-2.0	0.1	-0.7	0.4	-2.8	-74.76
Min	Cent	-3.8	-2.2	-1.2	-1.2	-4.0	-45.75
	591	-4.4	-3.3	-1.3	-2.1	-4.6	-43.89
	592	-3.2	-3.1	-1.2	-1.6	-3.7	-59.39
	599	-3.1	-1.2	-1.2	-0.4	-3.3	-68.30
	598	-4.6	-1.5	-1.2	-0.7	-4.7	-71.80

	NODE	Vxx	Vyy
Max	Cent	-1.6	-1.0
	591	-1.5	-0.8
	592	-1.5	-1.1
	599	-1.6	-1.1
	598	-1.6	-0.8
Min	Cent	-3.1	-3.7
	591	-3.0	-3.4
	592	-3.0	-4.0
	599	-3.2	-4.0
	598	-3.2	-3.4

ELEM	MAT	SEC	LC		NODE	Fxx	Fyy	Fxy	Fmax	Fmin	ANGLE
560	1	1	SX (RS)		Cent	1.9	0.6	0.6	2.2	0.3	20.75
					592	1.6	0.4	0.6	1.9	0.2	22.92
					593	1.6	0.7	0.6	1.9	0.4	26.85
					600	2.3	0.7	0.6	2.5	0.5	18.82
					599	2.3	0.4	0.6	2.5	0.3	16.55

	NODE	Mxx	Myy	Mxy	Mmax	Mmin	ANGLE
	Cent	4.1	1.2	0.4	4.1	1.1	7.79
	592	3.7	1.0	0.3	3.7	1.0	6.39
	593	4.5	0.8	0.4	4.5	0.8	6.00
	600	4.7	1.6	0.5	4.8	1.5	8.51
	599	3.4	1.3	0.4	3.5	1.2	10.34

	NODE	Vxx	Vyy
	Cent	2.1	1.1
	592	1.7	0.7
	593	1.7	1.4

600	2.4	1.4
599	2.4	0.7

LC		NODE	Fxx	Fyy	Fxy	Fmax	Fmin	ANGLE
SY (RS)		Cent	0.6	0.2	2.0	2.5	-1.7	42.43
		592	0.5	0.1	2.0	2.4	-1.7	42.50
		593	0.5	0.3	2.0	2.4	-1.7	43.52
		600	0.7	0.3	2.0	2.6	-1.6	42.20
		599	0.7	0.1	2.0	2.5	-1.6	41.19

	NODE	Mxx	Myy	Mxy	Mmax	Mmin	ANGLE
	Cent	0.4	1.5	0.3	1.6	0.3	75.06
	592	0.4	1.1	0.3	1.2	0.3	71.19
	593	0.4	1.7	0.3	1.8	0.3	76.32
	600	0.6	1.8	0.4	1.9	0.5	74.57
	599	0.4	1.4	0.3	1.5	0.3	73.31

	NODE	Vxx	Vyy
	Cent	0.4	0.4
	592	0.6	0.5
	593	0.6	0.3
	600	0.4	0.3
	599	0.4	0.5

LC		NODE	Fxx	Fyy	Fxy	Fmax	Fmin	ANGLE
RC ENV~1	Max	Cent	0.8	1.6	1.9	2.2	0.5	56.19
		592	0.6	1.6	1.9	2.2	0.4	55.37
		593	0.6	1.6	1.9	2.3	0.4	56.27
		600	1.0	1.6	1.9	2.3	0.7	56.84
		599	1.0	1.6	1.9	2.2	0.7	55.95
	Min	Cent	-3.4	0.2	-2.2	0.3	-3.5	-77.20
		592	-2.9	0.3	-2.2	0.5	-3.0	-75.98
		593	-2.9	0.0	-2.2	0.2	-3.0	-74.69
		600	-3.9	0.0	-2.2	0.2	-4.0	-78.25
		599	-3.9	0.3	-2.2	0.5	-4.0	-79.05

	NODE	Mxx	Myy	Mxy	Mmax	Mmin	ANGLE
Max	Cent	2.6	1.9	-0.6	2.9	1.3	-23.48
	592	1.0	0.9	-0.6	1.5	0.2	-39.49
	593	4.5	1.8	-0.7	4.6	0.8	-10.40
	600	4.7	3.1	-0.5	4.9	2.8	-42.45
	599	0.3	1.7	-0.5	1.8	0.1	-83.46
Min	Cent	-5.5	-2.9	-1.9	-1.0	-5.9	-47.54
	592	-6.4	-4.8	-1.8	-2.4	-6.7	-51.71
	593	-4.6	-4.2	-2.0	-0.5	-5.0	-25.10
	600	-4.7	-0.8	-2.0	0.2	-5.2	-73.12
	599	-6.5	-2.0	-1.8	-1.0	-6.8	-66.95

	NODE	Vxx	Vyy
Max	Cent	-2.9	-0.7
	592	-3.0	-0.5
	593	-3.0	-1.0
	600	-2.8	-1.0
	599	-2.8	-0.5
Min	Cent	-8.7	-7.1
	592	-8.1	-5.9
	593	-8.1	-8.2
	600	-9.4	-8.2
	599	-9.4	-5.9

LC		NODE	Fxx	Fyy	Fxy	Fmax	Fmin	ANGLE
RC ENV~2	Max	Cent	-0.7	1.2	0.0	1.2	-0.7	-82.02
		592	-0.7	1.1	0.0	1.2	-0.7	-81.19
		593	-0.7	1.2	0.0	1.3	-0.7	-81.26
		600	-0.6	1.2	0.0	1.2	-0.6	-82.71
		599	-0.6	1.1	0.0	1.2	-0.6	-82.66
	Min	Cent	-2.4	0.5	-0.5	0.5	-2.5	-87.23
		592	-2.1	0.6	-0.5	0.6	-2.2	-87.29
		593	-2.1	0.5	-0.5	0.5	-2.2	87.85

600	-2.8	0.5	-0.5	0.5	-2.8	87.74
599	-2.8	0.6	-0.5	0.6	-2.8	-87.40

	NODE	Mxx	Myy	Mxy	Mmax	Mmin	ANGLE
Max	Cent	0.7	0.6	-0.8	1.5	-1.1	-49.02
	592	-1.0	-0.1	-0.9	0.3	-2.4	-70.97
	593	2.0	0.2	-0.9	2.5	-0.9	-21.65
	600	2.7	2.1	-0.8	3.5	0.8	-46.06
	599	-0.7	0.7	-0.8	1.2	-1.7	-68.79
Min	Cent	-1.8	-1.8	-1.4	-0.5	-2.4	-54.29
	592	-3.1	-3.1	-1.3	-1.5	-3.7	-30.85
	593	-0.7	-2.7	-1.5	-0.2	-2.9	-30.43
	600	-0.3	-0.3	-1.5	0.7	-1.0	-51.50
	599	-3.4	-1.2	-1.3	-0.6	-3.6	-52.14

	NODE	Vxx	Vyy
Max	Cent	-4.0	-1.7
	592	-3.9	-1.1
	593	-3.9	-2.3
	600	-4.1	-2.3
	599	-4.1	-1.1
Min	Cent	-6.5	-4.8
	592	-6.0	-4.0
	593	-6.0	-5.6
	600	-7.0	-5.6
	599	-7.0	-4.0

ELEM	MAT	SEC	LC		NODE	Fxx	Fyy	Fxy	Fmax	Fmin	ANGLE
561	1	1	SX	(RS)	Cent	2.1	0.8	1.3	2.9	0.0	31.76
					593	1.1	0.7	1.3	2.2	-0.4	40.02
					594	1.1	1.2	1.3	2.4	-0.1	45.75
					601	3.1	1.2	1.3	3.8	0.6	26.25
					600	3.1	0.7	1.3	3.7	0.1	22.95

NODE	Mxx	Myy	Mxy	Mmax	Mmin	ANGLE
Cent	5.2	1.4	0.3	5.3	1.4	4.60
593	4.7	0.9	0.4	4.8	0.8	5.90
594	4.3	0.5	0.3	4.4	0.5	3.73
601	7.0	3.1	0.3	7.1	3.0	4.74
600	4.8	1.6	0.4	4.9	1.6	7.35

NODE	Vxx	Vyy
Cent	1.6	3.2
593	0.6	1.4
594	0.6	5.0
601	3.4	5.0
600	3.4	1.4

LC		NODE	Fxx	Fyy	Fxy	Fmax	Fmin	ANGLE
SY	(RS)	Cent	0.8	0.8	2.7	3.5	-2.0	44.85
		593	0.3	0.3	2.7	3.0	-2.5	44.82
		594	0.3	1.8	2.7	3.8	-1.8	52.56
		601	1.4	1.8	2.7	4.3	-1.2	46.93
		600	1.4	0.3	2.7	3.6	-2.0	39.09

NODE	Mxx	Myy	Mxy	Mmax	Mmin	ANGLE
Cent	0.7	2.3	0.5	2.4	0.5	74.26
593	0.4	1.6	0.5	1.8	0.3	70.21
594	0.7	2.1	0.6	2.4	0.4	69.90
601	1.8	3.7	0.6	3.9	1.7	74.14
600	0.8	1.7	0.4	1.9	0.7	67.64

NODE	Vxx	Vyy
Cent	2.1	1.6
593	1.1	0.3
594	1.1	2.9
601	3.1	2.9
600	3.1	0.3

LC		NODE	Fxx	Fyy	Fxy	Fmax	Fmin	ANGLE
RC ENV~1	Max	Cent	0.9	1.3	2.2	2.8	0.3	54.97
		593	0.4	1.6	2.2	3.0	-0.0	-51.56
		594	0.4	2.0	2.2	3.3	-0.0	59.11
		601	1.5	2.0	2.2	3.3	0.7	58.09
		600	1.5	1.6	2.2	2.7	0.7	52.71
	Min	Cent	-3.6	-0.4	-3.2	0.3	-4.4	-78.29
		593	-2.0	0.1	-3.2	0.6	-3.6	85.24
		594	-2.0	-1.6	-3.2	0.1	-4.5	-72.45
		601	-5.2	-1.6	-3.2	-0.3	-5.8	-68.46
		600	-5.2	0.1	-3.2	0.6	-5.6	84.21

		NODE	Mxx	Myy	Mxy	Mmax	Mmin	ANGLE
	Max	Cent	7.5	3.4	-0.8	7.7	2.4	-15.49
		593	5.0	1.8	-0.7	5.2	0.9	-10.77
		594	8.4	1.8	-0.5	8.5	1.7	-7.11
		601	13.7	7.3	-0.6	14.2	6.8	-15.12
		600	4.5	3.0	-0.8	4.8	2.5	-46.06
	Min	Cent	-3.0	-2.0	-2.2	0.4	-3.7	-65.51
		593	-4.4	-4.2	-2.2	-0.2	-5.0	-23.36
		594	-0.8	-4.6	-1.8	0.5	-4.7	-44.03
		601	-1.6	-0.3	-1.9	1.1	-2.4	-61.08
		600	-5.2	-0.9	-2.3	0.2	-5.7	-72.77

		NODE	Vxx	Vyy
	Max	Cent	-5.7	-1.2
		593	-5.0	-1.0
		594	-5.0	-1.4
		601	-6.2	-1.4
		600	-6.2	-1.0
	Min	Cent	-13.9	-12.6
		593	-9.4	-8.2
		594	-9.4	-17.6
		601	-18.5	-17.6
		600	-18.5	-8.2

LC		NODE	Fxx	Fyy	Fxy	Fmax	Fmin	ANGLE
RC ENV~2	Max	Cent	-0.5	0.5	0.0	1.0	-0.5	-69.97
		593	-0.5	1.2	0.0	1.7	-0.5	-67.61
		594	-0.5	0.2	0.0	0.7	-0.5	-55.42
		601	-0.5	0.2	0.0	0.3	-0.5	-76.89
		600	-0.5	1.2	0.0	1.5	-0.5	-75.99
	Min	Cent	-2.5	0.2	-1.3	0.3	-3.0	-77.77
		593	-1.4	0.5	-1.3	0.5	-2.0	89.54
		594	-1.4	-0.2	-1.3	0.1	-2.2	-71.72
		601	-3.7	-0.2	-1.3	0.1	-4.1	-71.90
		600	-3.7	0.5	-1.3	0.5	-4.0	89.52

		NODE	Mxx	Myy	Mxy	Mmax	Mmin	ANGLE
	Max	Cent	5.0	1.4	-0.8	5.5	0.6	-17.47
		593	2.5	0.3	-0.8	3.0	-0.8	-20.73
		594	6.0	-0.3	-0.7	6.1	-0.6	-8.02
		601	9.8	5.4	-0.7	10.2	4.9	-16.50
		600	2.1	2.0	-0.8	3.5	0.4	-49.08
	Min	Cent	1.4	-1.1	-1.7	1.8	-1.2	-22.42
		593	-0.5	-2.6	-1.6	0.0	-2.8	-28.44
		594	2.8	-3.0	-1.4	2.9	-3.1	-10.38
		601	4.1	1.6	-1.4	4.4	1.3	-17.68
		600	-0.7	-0.3	-1.7	0.6	-1.4	-54.71

		NODE	Vxx	Vyy
	Max	Cent	-7.0	-4.2
		593	-5.8	-2.3
		594	-5.8	-6.0
		601	-8.1	-6.0
		600	-8.1	-2.3
	Min	Cent	-10.3	-8.8
		593	-7.1	-5.6
		594	-7.1	-12.5
		601	-13.6	-12.5
		600	-13.6	-5.6

ELEM	MAT	SEC	LC		NODE	Fxx	Fyy	Fxy	Fmax	Fmin	ANGLE
562	1	1	SX	(RS)	Cent	0.8	1.1	1.0	2.0	-0.0	49.40
					594	1.3	1.0	1.0	2.1	0.2	41.33
					224	1.3	1.4	1.0	2.3	0.3	46.30
					227	0.5	1.4	1.0	2.0	-0.1	56.44
					601	0.5	1.0	1.0	1.8	-0.2	51.95

		NODE	Mxx	Myy	Mxy	Mmax	Mmin	ANGLE
		Cent	3.0	1.1	0.9	3.3	0.7	21.72
		594	4.1	0.5	1.2	4.5	0.1	17.00
		224	4.2	1.4	0.3	4.2	1.3	5.74
		227	4.1	1.0	0.4	4.2	1.0	6.57
		601	7.6	3.2	1.2	7.9	2.9	14.20

	NODE	Vxx	Vyy
	Cent	10.0	2.4
	594	0.4	5.0
	224	0.4	0.3
	227	19.6	0.3
	601	19.6	5.0

LC		NODE	Fxx	Fyy	Fxy	Fmax	Fmin	ANGLE
SY	(RS)	Cent	0.7	2.5	2.2	4.0	-0.8	55.63
		594	0.5	1.5	2.2	3.3	-1.3	51.49
		224	0.5	3.4	2.2	4.6	-0.7	61.68
		227	1.1	3.4	2.2	4.7	-0.2	58.74
		601	1.1	1.5	2.2	3.5	-0.9	47.63

	NODE	Mxx	Myy	Mxy	Mmax	Mmin	ANGLE
	Cent	1.2	3.0	0.9	3.4	0.8	68.57
	594	0.9	2.2	0.9	2.7	0.4	62.65
	224	1.1	1.6	0.7	2.1	0.6	53.71
	227	3.6	5.2	0.7	5.4	3.3	70.75
	601	1.3	3.3	0.9	3.6	1.0	69.81

	NODE	Vxx	Vyy
	Cent	3.9	4.4
	594	0.6	2.9
	224	0.6	6.1
	227	7.4	6.1
	601	7.4	2.9

LC		NODE	Fxx	Fyy	Fxy	Fmax	Fmin	ANGLE
RC ENV~1	Max	Cent	0.3	2.9	1.8	3.8	0.1	62.94
		594	0.5	1.8	1.8	2.9	0.2	59.88
		224	0.5	3.9	1.8	4.6	0.3	69.34
		227	0.8	3.9	1.8	4.8	0.1	65.04
		601	0.8	1.8	1.8	3.2	-0.0	52.70
	Min	Cent	-1.3	-2.0	-2.6	-0.0	-4.3	-63.93
		594	-2.2	-1.2	-2.6	0.2	-3.8	-72.65
		224	-2.2	-2.9	-2.6	-0.2	-4.8	73.03
		227	-1.4	-2.9	-2.6	-0.2	-4.8	77.90
		601	-1.4	-1.2	-2.6	0.2	-3.9	-67.15

		NODE	Mxx	Myy	Mxy	Mmax	Mmin	ANGLE
	Max	Cent	11.6	4.5	0.6	11.6	4.5	2.33
		594	8.5	1.9	0.7	8.5	1.8	1.81
		224	14.0	1.8	0.6	14.0	1.8	-0.81
		227	11.6	7.7	0.3	11.6	7.7	1.40
		601	15.4	7.6	0.5	15.5	7.6	-3.01
	Min	Cent	3.0	-1.6	-1.4	3.6	-1.9	-23.89
		594	-0.4	-4.6	-1.7	1.1	-4.6	-41.00
		224	3.4	-4.0	-1.2	3.5	-4.0	-9.38
		227	2.2	-2.7	-1.4	3.0	-3.1	-36.23
		601	-1.4	0.2	-1.9	1.6	-2.6	-57.36

	NODE	Vxx	Vyy

Max	Cent	6.3	-1.1
	594	-6.1	-1.4
	224	-6.1	1.3
	227	19.0	1.3
	601	19.0	-1.4
Min	Cent	-13.6	-14.7
	594	-9.6	-17.6
	224	-9.6	-12.0
	227	-20.2	-12.0
	601	-20.2	-17.6

LC		NODE	Fxx	Fyy	Fxy	Fmax	Fmin	ANGLE
RC ENV~2	Max	Cent	-0.4	0.5	-0.0	0.9	-0.4	-60.26
		594	-0.4	0.4	-0.0	0.6	-0.4	-65.24
		224	-0.4	0.7	-0.0	1.1	-0.4	-67.82
		227	-0.1	0.7	-0.0	1.3	-0.4	-57.02
		601	-0.1	0.4	-0.0	0.9	-0.4	-49.45
	Min	Cent	-1.0	-0.0	-1.0	0.1	-1.5	-66.86
		594	-1.5	-0.0	-1.0	0.2	-2.0	-73.15
		224	-1.5	-0.1	-1.0	-0.1	-1.9	-88.14
		227	-0.5	-0.1	-1.0	-0.1	-1.0	-88.11
		601	-0.5	-0.0	-1.0	0.2	-1.1	-67.36

		NODE	Mxx	Myy	Mxy	Mmax	Mmin	ANGLE
	Max	Cent	8.5	1.7	0.3	8.5	1.6	1.47
		594	6.1	-0.3	0.3	6.1	-0.4	1.06
		224	10.3	0.3	0.3	10.3	0.3	-1.29
		227	8.5	2.6	0.1	8.5	2.5	0.20
		601	11.0	5.6	0.0	11.1	5.6	-4.23
	Min	Cent	5.5	-0.6	-0.6	5.6	-0.6	-4.00
		594	3.0	-2.9	-0.5	3.0	-2.9	-5.60
		224	6.6	-2.5	-0.5	6.6	-2.5	-0.73
		227	6.1	1.4	-0.8	6.3	1.4	-12.35
		601	4.6	1.7	-0.8	4.8	1.5	-12.52

		NODE	Vxx	Vyy
	Max	Cent	-0.1	-5.3
		594	-6.3	-6.0
		224	-6.3	-4.6
		227	7.1	-4.6
		601	7.1	-6.0
	Min	Cent	-6.2	-10.4
		594	-7.3	-12.5
		224	-7.3	-8.5
		227	-6.0	-8.5
		601	-6.0	-12.5

ELEM	MAT	SEC	LC		NODE	Fxx	Fyy	Fxy	Fmax	Fmin	ANGLE
563	1	1	SX (RS)		Cent	4.8	0.2	3.4	6.6	-1.6	28.00
					552	1.0	1.0	3.4	4.4	-2.4	44.73
					595	1.0	0.5	3.4	4.2	-2.6	42.82
					602	10.6	0.5	3.4	11.7	-0.5	16.92
					12	10.6	1.0	3.4	11.7	-0.1	17.53

	NODE	Mxx	Myy	Mxy	Mmax	Mmin	ANGLE
	Cent	12.7	3.2	3.0	13.6	2.3	16.40
	552	9.1	1.8	10.3	16.3	-5.4	35.27
	595	5.6	0.4	1.8	6.2	-0.1	17.45
	602	6.5	5.5	2.4	8.4	3.6	39.14
	12	47.6	9.5	9.7	49.9	7.2	13.53

	NODE	Vxx	Vyy
	Cent	23.2	5.5
	552	25.8	0.0
	595	25.8	11.0
	602	72.2	11.0
	12	72.2	0.0

LC	NODE	Fxx	Fyy	Fxy	Fmax	Fmin	ANGLE

```
-------- ---- ------ ---------- ---------- ---------- ---------- ---------- ----------
      SY (RS)   Cent        0.1        6.5        4.4        8.7       -2.1      63.17
                 552        0.8       14.8        4.4       16.0       -0.4      74.01
                 595        0.8        1.7        4.4        5.7       -3.1      48.01
                 602        1.0        1.7        4.4        5.7       -3.0      47.43
                  12        1.0       14.8        4.4       16.0       -0.3      73.84

                NODE        Mxx        Myy        Mxy       Mmax       Mmin      ANGLE
           ---- ------ ---------- ---------- ---------- ---------- ---------- ----------
                Cent        3.6       13.7        3.1       14.6        2.7      74.33
                 552        6.4        9.0        1.7        9.8        5.6      64.23
                 595        0.6        5.9        1.1        6.1        0.4      78.12
                 602        1.8        7.1        9.3       14.1       -5.2      53.00
                  12       10.3       47.0        8.7       49.0        8.3      77.27

                NODE        Vxx        Vyy
           ---- ------ ---------- ----------
                Cent        6.8       23.5
                 552       11.4       71.5
                 595       11.4       24.4
                 602        2.2       24.4
                  12        2.2       71.5


      LC        NODE        Fxx        Fyy        Fxy       Fmax       Fmin      ANGLE
-------- ---- ------ ---------- ---------- ---------- ---------- ---------- ----------
RC ENV~1  Max   Cent        3.9        7.3        4.4        9.2       -0.0      66.20
                 552        0.1       15.4        4.4       16.6       -1.2      75.19
                 595        0.1        2.6        4.4        5.9       -1.1      53.60
                 602        9.8        2.6        4.4       11.0        0.8      19.68
                  12        9.8       15.4        4.4       16.6        0.6      74.97
           Min   Cent       -5.7       -5.8       -4.3        0.8       -8.3      85.42
                 552       -2.5      -14.1       -4.3       -0.4      -15.5     -17.40
                 595       -2.5       -0.9       -4.3        1.0       -5.6     -82.32
                 602      -11.5       -0.9       -4.3        1.1      -12.3      85.94
                  12      -11.5      -14.1       -4.3       -0.5      -15.5     -17.49

                NODE        Mxx        Myy        Mxy       Mmax       Mmin      ANGLE
           ---- ------ ---------- ---------- ---------- ---------- ---------- ----------
           Max   Cent       15.9       18.8        4.1       20.0       14.1      72.98
                 552       11.6        6.7       10.8       17.6        5.3      30.68
                 595        8.7        8.9        3.0       10.2        6.5      39.15
                 602        1.9       10.7        9.7       15.4        0.9      62.08
                  12       62.0       63.5        9.5       65.3       40.4      78.15
           Min   Cent       -9.4       -8.6       -2.6        0.2       -9.8     -13.57
                 552       -6.9      -11.3       -9.7       -4.0      -15.3      -8.83
                 595       -4.7       -2.8       -1.9        0.3       -4.7       0.05
                 602      -11.1       -3.9       -8.9       -2.0      -14.1     -78.01
                  12      -33.2      -30.6      -10.0        6.3      -35.5     -13.69

                NODE        Vxx        Vyy
           ---- ------ ---------- ----------
           Max   Cent       41.1        6.7
                 552       29.9       40.1
                 595       29.9       22.0
                 602      101.5       22.0
                  12      101.5       40.1
           Min   Cent       -6.5      -42.4
                 552      -21.7     -102.8
                 595      -21.7      -26.8
                 602      -42.9      -26.8
                  12      -42.9     -102.8


      LC        NODE        Fxx        Fyy        Fxy       Fmax       Fmin      ANGLE
-------- ---- ------ ---------- ---------- ---------- ---------- ---------- ----------
RC ENV~2  Max   Cent        0.2        1.2        0.6        1.3       -0.1      83.00
                 552       -0.8        1.0        0.6        1.0       -0.9     -86.76
                 595       -0.8        1.5        0.6        1.6       -0.9      82.71
                 602        1.1        1.5        0.6        1.6        0.5      84.29
                  12        1.1        1.0        0.6        1.4        0.4     -27.35
           Min   Cent       -2.3        0.6       -0.4        0.6       -2.4      85.94
                 552       -1.8        0.4       -0.4        0.4       -1.9      85.44
                 595       -1.8        0.7       -0.4        0.8       -1.9     -83.58
                 602       -3.1        0.7       -0.4        0.9       -3.2     -88.22
                  12       -3.1        0.4       -0.4        0.4       -3.2      84.94

                NODE        Mxx        Myy        Mxy       Mmax       Mmin      ANGLE
           ---- ------ ---------- ---------- ---------- ---------- ---------- ----------
```

Max	Cent	10.5	10.2	1.3	11.0	9.7	37.65
	552	8.0	-2.2	1.5	8.1	-2.4	6.95
	595	5.8	5.8	1.5	7.3	4.3	44.24
	602	-2.0	7.5	0.6	7.5	-2.2	89.30
	12	32.4	30.3	0.3	33.8	29.0	-32.18
Min	Cent	2.0	4.5	-1.5	4.5	1.9	84.41
	552	1.9	-3.5	-2.7	2.0	-4.5	2.23
	595	0.7	2.2	-1.0	2.5	0.3	-79.67
	602	-4.8	2.5	-2.1	2.7	-4.8	-79.96
	12	7.2	15.6	-3.7	15.6	7.2	89.42

	NODE	Vxx	Vyy
Max	Cent	29.6	-16.5
	552	9.3	-31.1
	595	9.3	-2.0
	602	54.9	-2.0
	12	54.9	-31.1
Min	Cent	12.1	-30.2
	552	-0.0	-53.7
	595	-0.0	-7.2
	602	16.3	-7.2
	12	16.3	-53.7

ELEM	MAT	SEC	LC	NODE	Fxx	Fyy	Fxy	Fmax	Fmin	ANGLE
564	1	1	SX (RS)	Cent	2.6	0.5	1.0	3.1	0.1	22.05
				595	2.2	0.9	1.0	2.8	0.4	29.56
				596	2.2	0.2	1.0	2.6	-0.3	22.93
				603	3.1	0.2	1.0	3.4	-0.1	17.45
				602	3.1	0.9	1.0	3.5	0.5	21.65

NODE	Mxx	Myy	Mxy	Mmax	Mmin	ANGLE
Cent	4.1	2.2	0.7	4.3	2.0	19.55
595	4.9	0.6	0.7	5.0	0.4	9.04
596	3.2	2.0	0.5	3.4	1.8	20.05
603	1.9	1.9	0.5	2.4	1.3	45.31
602	6.6	5.6	0.7	7.0	5.2	27.20

NODE	Vxx	Vyy
Cent	6.2	5.7
595	4.5	11.0
596	4.5	0.4
603	8.0	0.4
602	8.0	11.0

LC	NODE	Fxx	Fyy	Fxy	Fmax	Fmin	ANGLE
SY (RS)	Cent	0.2	0.6	1.4	1.9	-1.0	49.22
	595	0.8	1.7	1.4	2.8	-0.3	53.89
	596	0.8	0.7	1.4	2.2	-0.7	44.35
	603	0.4	0.7	1.4	2.0	-0.9	47.85
	602	0.4	1.7	1.4	2.7	-0.5	56.95

NODE	Mxx	Myy	Mxy	Mmax	Mmin	ANGLE
Cent	0.2	1.4	1.0	2.0	-0.4	59.80
595	2.9	6.6	1.4	7.0	2.5	71.21
596	1.3	2.3	1.5	3.4	0.3	54.98
603	0.5	3.6	0.2	3.6	0.5	87.05
602	1.5	7.1	0.1	7.1	1.5	89.05

NODE	Vxx	Vyy
Cent	3.2	11.3
595	6.0	24.4
596	6.0	1.8
603	0.5	1.8
602	0.5	24.4

LC		NODE	Fxx	Fyy	Fxy	Fmax	Fmin	ANGLE
RC ENV~1	Max	Cent	1.7	2.1	1.5	2.6	0.5	40.34
		595	1.2	2.6	1.5	3.3	0.4	66.38

		596	1.2	1.9	1.5	2.4	0.0	60.07
		603	2.3	1.9	1.5	2.9	0.4	29.95
		602	2.3	2.6	1.5	3.2	0.9	67.67
	Min	Cent	-3.6	0.2	-1.4	0.6	-3.8	-76.56
		595	-3.1	-0.9	-1.4	0.2	-3.4	-53.86
		596	-3.1	0.1	-1.4	0.9	-3.4	-61.76
		603	-4.0	0.1	-1.4	0.9	-4.2	-78.52
		602	-4.0	-0.9	-1.4	0.2	-4.2	-76.65

		NODE	Mxx	Myy	Mxy	Mmax	Mmin	ANGLE
	Max	Cent	2.3	7.0	0.7	7.5	1.8	-73.79
		595	6.8	9.4	1.6	9.8	6.5	77.14
		596	-0.5	3.0	1.3	3.3	-0.6	77.65
		603	-1.0	5.4	-0.4	6.7	-2.3	-61.99
		602	5.8	12.5	0.2	13.1	5.8	-74.01
	Min	Cent	-6.3	-0.1	-3.6	0.1	-6.5	-80.09
		595	-4.9	-3.7	-3.0	-2.0	-4.9	-36.25
		596	-6.9	-1.6	-3.1	-1.2	-7.0	-82.93
		603	-6.1	-2.5	-4.2	-2.1	-6.5	-67.76
		602	-7.5	-3.1	-4.0	-2.0	-7.8	-28.86

		NODE	Vxx	Vyy
	Max	Cent	13.8	9.7
		595	14.6	22.0
		596	14.6	0.8
		603	13.0	0.8
		602	13.0	22.0
	Min	Cent	-0.8	-13.0
		595	-0.1	-26.8
		596	-0.1	-7.4
		603	-3.0	-7.4
		602	-3.0	-26.8

LC		NODE	Fxx	Fyy	Fxy	Fmax	Fmin	ANGLE
RC ENV~2	Max	Cent	-0.4	1.5	0.2	1.5	-0.4	87.74
		595	-0.5	1.6	0.2	1.6	-0.5	87.83
		596	-0.5	1.4	0.2	1.4	-0.5	87.70
		603	-0.3	1.4	0.2	1.4	-0.3	87.63
		602	-0.3	1.6	0.2	1.6	-0.3	87.77
	Min	Cent	-2.0	0.7	-0.1	0.7	-2.0	-86.88
		595	-2.1	0.6	-0.1	0.6	-2.1	-87.03
		596	-2.1	0.8	-0.1	0.8	-2.1	-89.41
		603	-2.0	0.8	-0.1	0.8	-2.0	-89.31
		602	-2.0	0.6	-0.1	0.6	-2.0	-86.19

		NODE	Mxx	Myy	Mxy	Mmax	Mmin	ANGLE
	Max	Cent	1.1	5.0	-0.3	5.2	0.5	-76.74
		595	4.4	5.5	0.3	5.5	4.4	-79.85
		596	-1.6	1.9	-0.1	2.1	-2.3	-79.89
		603	-1.4	3.7	-0.9	4.4	-2.8	-64.66
		602	3.5	8.8	-0.5	9.1	3.1	-76.25
	Min	Cent	-2.3	1.6	-2.3	2.1	-2.3	-85.12
		595	-0.2	2.1	-1.8	2.7	-0.3	-79.65
		596	-3.8	-0.7	-2.0	0.1	-3.8	-68.48
		603	-4.2	1.0	-2.8	1.2	-4.4	-80.57
		602	-1.1	3.2	-2.6	3.8	-1.4	-83.64

		NODE	Vxx	Vyy
	Max	Cent	9.9	-1.5
		595	10.5	-2.0
		596	10.5	-0.9
		603	9.3	-0.9
		602	9.3	-2.0
	Min	Cent	3.8	-6.0
		595	4.7	-7.2
		596	4.7	-4.9
		603	2.9	-4.9
		602	2.9	-7.2

ELEM	MAT	SEC	LC		NODE	Fxx	Fyy	Fxy	Fmax	Fmin	ANGLE
565	1	1	SX (RS)		Cent	1.9	0.2	0.6	2.1	0.0	18.12

596	1.8	0.3	0.6	2.0	0.1	19.85
597	1.8	0.2	0.6	2.0	0.0	19.20
604	2.0	0.2	0.6	2.2	0.0	17.25
603	2.0	0.3	0.6	2.2	0.1	17.79

NODE	Mxx	Myy	Mxy	Mmax	Mmin	ANGLE
Cent	2.3	1.5	0.3	2.4	1.4	18.19
596	3.0	1.9	0.5	3.2	1.7	21.51
597	2.2	1.1	0.3	2.3	1.0	15.33
604	2.0	1.2	0.1	2.0	1.2	10.41
603	2.7	2.1	0.3	2.8	2.0	21.12

NODE	Vxx	Vyy
Cent	2.9	0.5
596	2.9	0.4
597	2.9	0.5
604	2.8	0.5
603	2.8	0.4

LC		NODE	Fxx	Fyy	Fxy	Fmax	Fmin	ANGLE
SY (RS)		Cent	0.2	0.5	1.4	1.8	-1.1	47.74
		596	0.2	0.7	1.4	1.9	-1.0	49.91
		597	0.2	0.3	1.4	1.7	-1.2	46.65
		604	0.3	0.3	1.4	1.8	-1.1	45.10
		603	0.3	0.7	1.4	2.0	-0.9	48.39

NODE	Mxx	Myy	Mxy	Mmax	Mmin	ANGLE
Cent	0.2	2.2	0.9	2.6	-0.1	68.69
596	0.4	2.5	0.8	2.8	0.1	72.16
597	0.6	1.6	0.5	1.9	0.4	67.79
604	0.3	1.2	1.1	2.0	-0.5	56.30
603	0.6	3.6	1.4	4.2	0.0	68.74

NODE	Vxx	Vyy
Cent	0.2	0.4
596	0.1	1.8
597	0.1	1.2
604	0.3	1.2
603	0.3	1.8

LC		NODE	Fxx	Fyy	Fxy	Fmax	Fmin	ANGLE
RC ENV~1	Max	Cent	0.9	1.9	1.5	2.1	0.3	62.30
		596	0.8	2.0	1.5	2.2	0.3	63.88
		597	0.8	1.9	1.5	2.0	0.2	61.87
		604	1.1	1.9	1.5	2.0	0.4	60.28
		603	1.1	2.0	1.5	2.3	0.4	62.43
	Min	Cent	-2.8	0.4	-1.4	0.7	-2.9	-81.10
		596	-2.7	0.2	-1.4	0.6	-2.8	-80.69
		597	-2.7	0.5	-1.4	0.7	-2.8	-80.91
		604	-2.9	0.5	-1.4	0.7	-3.0	-81.29
		603	-2.9	0.2	-1.4	0.6	-3.0	-81.10

NODE		Mxx	Myy	Mxy	Mmax	Mmin	ANGLE
Max	Cent	-1.1	3.0	0.3	3.7	-1.6	-56.61
	596	-0.2	3.3	0.3	3.6	-0.2	-69.02
	597	-2.4	1.6	-0.0	1.6	-2.4	-89.77
	604	-0.9	2.7	0.3	4.2	-2.6	-60.76
	603	1.1	5.9	0.6	7.2	-0.6	-58.61
Min	Cent	-6.2	-1.7	-3.2	-0.9	-6.4	-63.86
	596	-6.3	-1.7	-3.2	-1.1	-6.5	-63.24
	597	-6.8	-2.4	-2.8	-1.4	-6.9	-74.59
	604	-6.6	-1.0	-3.4	-0.9	-6.7	-80.50
	603	-5.9	-2.3	-3.7	-0.7	-6.1	-54.12

NODE		Vxx	Vyy
Max	Cent	6.0	-0.3
	596	6.1	0.8
	597	6.1	0.7
	604	6.0	0.7

				603	6.0	0.8			
			Min	Cent	-0.8	-7.0			
				596	-0.8	-7.4			
				597	-0.8	-6.6			
				604	-0.8	-6.6			
				603	-0.8	-7.4			

	LC		NODE	Fxx	Fyy	Fxy	Fmax	Fmin	ANGLE
	RC ENV~2	Max	Cent	-0.7	1.4	0.1	1.4	-0.7	87.94
			596	-0.8	1.4	0.1	1.4	-0.8	88.00
			597	-0.8	1.4	0.1	1.4	-0.8	88.84
			604	-0.7	1.4	0.1	1.4	-0.7	88.78
			603	-0.7	1.4	0.1	1.4	-0.7	87.92
		Min	Cent	-1.9	0.7	0.0	0.7	-1.9	88.98
			596	-1.9	0.7	0.0	0.7	-1.9	89.60
			597	-1.9	0.8	0.0	0.8	-1.9	87.44
			604	-1.8	0.8	0.0	0.8	-1.8	87.32
			603	-1.8	0.7	0.0	0.7	-1.8	89.57

		NODE	Mxx	Myy	Mxy	Mmax	Mmin	ANGLE
	Max	Cent	-1.4	2.1	-0.6	2.5	-2.6	-73.78
		596	-0.7	2.1	-0.5	2.5	-1.7	-72.58
		597	-2.5	0.3	-0.5	0.6	-3.8	-76.02
		604	-1.4	1.8	-0.8	2.6	-2.7	-63.86
		603	0.2	4.1	-0.8	4.7	-1.2	-61.67
	Min	Cent	-3.9	0.1	-2.2	0.6	-4.0	-81.84
		596	-3.3	-0.6	-2.1	0.5	-3.4	-64.07
		597	-4.7	-1.5	-1.8	-0.4	-4.8	-68.43
		604	-4.7	0.2	-2.3	0.3	-4.9	-80.75
		603	-3.3	1.2	-2.5	1.4	-3.4	-80.47

		NODE	Vxx	Vyy
	Max	Cent	4.3	-0.7
		596	4.3	-0.9
		597	4.3	-0.5
		604	4.3	-0.5
		603	4.3	-0.9
	Min	Cent	1.1	-4.6
		596	1.2	-4.9
		597	1.2	-4.3
		604	1.1	-4.3
		603	1.1	-4.9

ELEM	MAT	SEC	LC		NODE	Fxx	Fyy	Fxy	Fmax	Fmin	ANGLE
566	1	1	SX (RS)		Cent	1.7	0.2	0.5	1.8	0.1	16.31
					597	1.7	0.2	0.5	1.8	0.1	16.33
					598	1.7	0.3	0.5	1.8	0.2	17.77
					605	1.8	0.3	0.5	1.9	0.2	16.80
					604	1.8	0.2	0.5	1.9	0.1	15.50

		NODE	Mxx	Myy	Mxy	Mmax	Mmin	ANGLE
		Cent	2.3	1.1	0.1	2.3	1.1	3.49
		597	2.3	1.1	0.1	2.3	1.1	6.59
		598	2.7	1.1	0.1	2.7	1.1	2.20
		605	2.6	1.1	0.1	2.6	1.1	5.32
		604	2.1	1.3	0.1	2.1	1.3	8.04

		NODE	Vxx	Vyy
		Cent	2.2	0.3
		597	2.2	0.5
		598	2.2	0.1
		605	2.3	0.1
		604	2.3	0.5

	LC		NODE	Fxx	Fyy	Fxy	Fmax	Fmin	ANGLE
	SY (RS)		Cent	0.3	0.3	1.5	1.8	-1.2	44.80
			597	0.3	0.3	1.5	1.8	-1.2	45.73
			598	0.3	0.3	1.5	1.8	-1.2	45.60
			605	0.5	0.3	1.5	1.9	-1.1	43.63

		604	0.5	0.3	1.5	1.9	-1.1	43.77

	NODE	Mxx	Myy	Mxy	Mmax	Mmin	ANGLE
	Cent	0.2	1.4	0.5	1.6	0.0	69.23
	597	0.1	1.7	0.5	1.9	-0.0	73.39
	598	0.5	1.3	0.4	1.5	0.3	66.72
	605	0.3	1.5	0.5	1.7	0.1	69.60
	604	0.2	1.3	0.6	1.5	-0.0	65.50

	NODE	Vxx	Vyy
	Cent	0.3	0.5
	597	0.4	1.2
	598	0.4	0.3
	605	0.2	0.3
	604	0.2	1.2

LC		NODE	Fxx	Fyy	Fxy	Fmax	Fmin	ANGLE
RC ENV~1	Max	Cent	0.7	1.9	1.6	2.1	0.3	60.10
		597	0.6	1.9	1.6	2.0	0.3	60.90
		598	0.6	1.9	1.6	2.0	0.3	60.90
		605	0.8	1.9	1.6	2.1	0.4	59.08
		604	0.8	1.9	1.6	2.1	0.4	59.09
	Min	Cent	-2.7	0.5	-1.4	0.6	-2.8	-83.12
		597	-2.7	0.5	-1.4	0.7	-2.7	-83.16
		598	-2.7	0.5	-1.4	0.6	-2.7	-82.88
		605	-2.7	0.5	-1.4	0.6	-2.8	-82.96
		604	-2.7	0.5	-1.4	0.7	-2.8	-83.23

		NODE	Mxx	Myy	Mxy	Mmax	Mmin	ANGLE
	Max	Cent	-1.2	1.5	-0.1	1.9	-2.0	-72.85
		597	-2.1	1.7	-0.1	1.7	-2.2	-89.11
		598	-1.6	1.2	-0.1	1.2	-1.7	-88.46
		605	-0.0	2.4	-0.1	3.2	-1.5	-61.27
		604	-0.5	2.9	-0.1	4.0	-2.2	-61.04
	Min	Cent	-6.6	-1.4	-2.4	-1.0	-6.7	-71.69
		597	-6.6	-2.3	-2.5	-1.3	-6.7	-69.94
		598	-7.0	-2.9	-2.1	-1.2	-7.0	-64.33
		605	-6.7	-1.3	-2.3	-1.0	-6.8	-71.65
		604	-6.4	-1.0	-2.8	-0.9	-6.5	-81.72

		NODE	Vxx	Vyy
	Max	Cent	2.0	0.0
		597	2.0	0.7
		598	2.0	-0.3
		605	2.0	-0.3
		604	2.0	0.7
	Min	Cent	-2.5	-6.6
		597	-2.4	-6.6
		598	-2.4	-6.7
		605	-2.6	-6.7
		604	-2.6	-6.6

LC		NODE	Fxx	Fyy	Fxy	Fmax	Fmin	ANGLE
RC ENV~2	Max	Cent	-0.9	1.4	0.1	1.4	-0.9	88.84
		597	-1.0	1.4	0.1	1.4	-1.0	88.04
		598	-1.0	1.4	0.1	1.4	-1.0	88.87
		605	-0.9	1.4	0.1	1.4	-0.9	88.83
		604	-0.9	1.4	0.1	1.4	-0.9	87.96
	Min	Cent	-1.9	0.7	0.0	0.7	-1.9	87.51
		597	-2.0	0.7	0.0	0.7	-2.0	89.12
		598	-2.0	0.7	0.0	0.7	-2.0	87.51
		605	-1.9	0.7	0.0	0.7	-1.9	87.38
		604	-1.9	0.7	0.0	0.7	-1.9	89.08

		NODE	Mxx	Myy	Mxy	Mmax	Mmin	ANGLE
	Max	Cent	-1.5	0.9	-0.6	1.3	-2.6	-75.04
		597	-2.2	0.4	-0.6	0.8	-3.5	-73.88
		598	-2.0	0.1	-0.6	0.3	-3.1	-74.65
		605	-0.7	1.6	-0.6	2.0	-1.6	-65.38
		604	-1.1	2.0	-0.7	2.5	-2.1	-64.59

Min	Cent	-4.4	-0.4	-1.7	0.1	-4.5	-81.78
	597	-4.4	-1.5	-1.7	-0.4	-4.5	-66.52
	598	-4.5	-1.8	-1.4	-0.8	-4.6	-69.22
	605	-4.4	0.1	-1.6	0.2	-4.5	-81.57
	604	-4.4	0.3	-1.9	0.3	-4.5	-81.85

	NODE	Vxx	Vyy
Max	Cent	0.9	-0.5
	597	1.0	-0.5
	598	1.0	-0.5
	605	0.9	-0.5
	604	0.9	-0.5
Min	Cent	-0.9	-4.3
	597	-0.9	-4.3
	598	-0.9	-4.3
	605	-1.0	-4.3
	604	-1.0	-4.3

ELEM	MAT	SEC	LC		NODE	Fxx	Fyy	Fxy	Fmax	Fmin	ANGLE
567	1	1	SX (RS)		Cent	1.9	0.4	0.4	2.0	0.3	13.71
					598	1.8	0.3	0.4	1.9	0.2	13.03
					599	1.8	0.6	0.4	1.9	0.5	15.62
					606	1.9	0.6	0.4	2.0	0.5	14.52
					605	1.9	0.3	0.4	2.0	0.2	12.24

	NODE	Mxx	Myy	Mxy	Mmax	Mmin	ANGLE
	Cent	3.0	1.2	0.2	3.0	1.2	5.81
	598	2.6	1.1	0.1	2.6	1.1	4.05
	599	3.5	1.4	0.2	3.6	1.3	5.10
	606	3.5	1.5	0.3	3.5	1.5	7.65
	605	2.4	1.1	0.2	2.5	1.1	8.06

	NODE	Vxx	Vyy
	Cent	2.1	0.2
	598	2.0	0.1
	599	2.0	0.4
	606	2.1	0.4
	605	2.1	0.1

LC		NODE	Fxx	Fyy	Fxy	Fmax	Fmin	ANGLE
SY (RS)		Cent	0.5	0.3	1.7	2.1	-1.2	43.23
		598	0.5	0.3	1.7	2.0	-1.3	43.55
		599	0.5	0.3	1.7	2.0	-1.3	43.89
		606	0.6	0.3	1.7	2.1	-1.2	42.72
		605	0.6	0.3	1.7	2.1	-1.2	42.37

	NODE	Mxx	Myy	Mxy	Mmax	Mmin	ANGLE
	Cent	0.3	1.3	0.5	1.5	0.1	69.50
	598	0.2	1.3	0.4	1.5	0.1	71.19
	599	0.4	1.4	0.4	1.5	0.2	69.16
	606	0.4	1.2	0.5	1.4	0.2	64.28
	605	0.3	1.5	0.5	1.7	0.1	70.81

	NODE	Vxx	Vyy
	Cent	0.3	0.1
	598	0.3	0.3
	599	0.3	0.4
	606	0.3	0.4
	605	0.3	0.3

LC		NODE	Fxx	Fyy	Fxy	Fmax	Fmin	ANGLE
RC ENV~1	Max	Cent	0.8	1.9	1.7	2.2	0.5	58.72
		598	0.7	1.8	1.7	2.1	0.4	58.83
		599	0.7	2.0	1.7	2.2	0.5	59.40
		606	0.8	2.0	1.7	2.2	0.6	58.46
		605	0.8	1.8	1.7	2.2	0.5	57.87
	Min	Cent	-3.2	0.4	-1.6	0.5	-3.2	-84.47
		598	-3.2	0.5	-1.6	0.6	-3.2	-84.57

		599	-3.2	0.3	-1.6	0.3	-3.2	-84.16
		606	-3.2	0.3	-1.6	0.3	-3.2	-84.34
		605	-3.2	0.5	-1.6	0.6	-3.2	-84.73

	NODE	Mxx	Myy	Mxy	Mmax	Mmin	ANGLE
Max	Cent	-0.0	1.7	-0.1	2.0	-0.6	-74.49
	598	-1.7	1.2	-0.2	1.2	-1.8	-87.70
	599	0.7	1.8	-0.2	1.9	0.6	-71.38
	606	1.9	3.6	0.0	3.8	1.2	-77.06
	605	-0.2	2.3	-0.0	2.7	-1.0	-66.43
Min	Cent	-6.5	-1.0	-1.5	-0.8	-6.6	-82.63
	598	-6.9	-2.8	-1.8	-1.3	-7.0	-65.63
	599	-6.4	-2.4	-1.4	-1.1	-6.5	-63.61
	606	-6.2	-0.7	-1.3	-0.6	-6.3	-82.42
	605	-6.6	-1.4	-1.7	-1.1	-6.7	-73.45

	NODE	Vxx	Vyy
Max	Cent	-0.4	-0.4
	598	-0.4	-0.3
	599	-0.4	-0.3
	606	-0.4	-0.3
	605	-0.4	-0.3
Min	Cent	-4.5	-6.9
	598	-4.5	-6.7
	599	-4.5	-7.0
	606	-4.6	-7.0
	605	-4.6	-6.7

LC		NODE	Fxx	Fyy	Fxy	Fmax	Fmin	ANGLE
RC ENV~2	Max	Cent	-0.8	1.4	0.1	1.4	-0.8	89.84
		598	-0.8	1.3	0.1	1.3	-0.8	89.83
		599	-0.8	1.5	0.1	1.5	-0.8	89.84
		606	-0.7	1.5	0.1	1.5	-0.7	89.84
		605	-0.7	1.3	0.1	1.3	-0.7	89.83
	Min	Cent	-2.3	0.7	-0.0	0.7	-2.3	88.01
		598	-2.3	0.7	-0.0	0.7	-2.3	88.09
		599	-2.3	0.6	-0.0	0.6	-2.3	86.51
		606	-2.3	0.6	-0.0	0.6	-2.3	86.28
		605	-2.3	0.7	-0.0	0.7	-2.3	88.01

	NODE	Mxx	Myy	Mxy	Mmax	Mmin	ANGLE
Max	Cent	-0.6	1.2	-0.5	1.4	-1.3	-76.35
	598	-2.0	0.1	-0.6	0.3	-3.0	-74.80
	599	-0.4	0.7	-0.6	1.0	-1.3	-71.63
	606	0.8	2.5	-0.4	2.6	0.4	-78.36
	605	-0.9	1.5	-0.5	1.7	-1.3	-79.23
Min	Cent	-3.8	-0.4	-1.1	-0.0	-3.9	-72.62
	598	-4.5	-1.8	-1.3	-1.0	-4.6	-53.40
	599	-3.1	-1.5	-1.0	-0.7	-3.2	-68.95
	606	-3.0	0.6	-0.9	0.8	-3.0	-82.33
	605	-4.4	0.1	-1.2	0.2	-4.5	-83.25

	NODE	Vxx	Vyy
Max	Cent	-1.6	-0.6
	598	-1.6	-0.5
	599	-1.6	-0.8
	606	-1.5	-0.8
	605	-1.5	-0.5
Min	Cent	-3.2	-4.4
	598	-3.2	-4.3
	599	-3.2	-4.6
	606	-3.2	-4.6
	605	-3.2	-4.3

ELEM	MAT	SEC	LC		NODE	Fxx	Fyy	Fxy	Fmax	Fmin	ANGLE
568	1	1	SX (RS)		Cent	2.4	0.6	0.4	2.4	0.6	11.91
					599	2.2	0.4	0.4	2.3	0.4	11.55
					600	2.2	0.9	0.4	2.3	0.8	14.47
					607	2.5	0.9	0.4	2.6	0.8	12.32
					606	2.5	0.4	0.4	2.6	0.4	10.10

	NODE	Mxx	Myy	Mxy	Mmax	Mmin	ANGLE
	Cent	4.0	1.8	0.4	4.1	1.8	9.28
	599	3.4	1.3	0.3	3.5	1.3	9.15
	600	4.9	2.2	0.5	4.9	2.1	9.64
	607	4.6	2.3	0.4	4.7	2.2	9.85
	606	3.2	1.5	0.3	3.3	1.4	10.52

	NODE	Vxx	Vyy
	Cent	2.4	0.3
	599	2.4	0.4
	600	2.4	0.3
	607	2.3	0.3
	606	2.3	0.4

LC		NODE	Fxx	Fyy	Fxy	Fmax	Fmin	ANGLE
SY (RS)		Cent	0.7	0.1	1.8	2.3	-1.4	40.37
		599	0.7	0.3	1.8	2.4	-1.4	41.87
		600	0.7	0.3	1.8	2.3	-1.4	41.68
		607	0.8	0.3	1.8	2.4	-1.3	40.85
		606	0.8	0.3	1.8	2.4	-1.3	41.03

	NODE	Mxx	Myy	Mxy	Mmax	Mmin	ANGLE
	Cent	0.4	1.6	0.6	1.9	0.2	67.49
	599	0.4	1.3	0.4	1.5	0.2	69.09
	600	0.6	1.7	0.5	1.9	0.4	67.55
	607	0.7	2.4	0.8	2.7	0.3	67.76
	606	0.3	1.2	0.7	1.6	-0.1	61.27

	NODE	Vxx	Vyy
	Cent	0.4	0.3
	599	0.4	0.4
	600	0.4	1.1
	607	0.4	1.1
	606	0.4	0.4

LC		NODE	Fxx	Fyy	Fxy	Fmax	Fmin	ANGLE
RC ENV~1	Max	Cent	1.0	2.0	1.8	2.2	0.8	56.63
		599	0.9	1.9	1.8	2.3	0.7	57.46
		600	0.9	2.1	1.8	2.3	0.8	57.67
		607	1.1	2.1	1.8	2.3	1.0	57.49
		606	1.1	1.9	1.8	2.3	0.8	57.28
	Min	Cent	-4.0	0.2	-1.9	0.3	-4.0	-84.28
		599	-3.8	0.4	-1.9	0.4	-3.8	-84.27
		600	-3.8	0.0	-1.9	0.1	-3.8	-83.72
		607	-4.1	0.0	-1.9	0.1	-4.1	-84.29
		606	-4.1	0.4	-1.9	0.4	-4.1	-84.75

	NODE	Mxx	Myy	Mxy	Mmax	Mmin	ANGLE
Max	Cent	2.6	3.6	0.1	3.9	2.5	-72.20
	599	0.3	1.7	-0.3	1.8	0.2	-76.36
	600	4.9	3.9	-0.2	5.0	3.9	-14.08
	607	5.5	6.7	0.4	6.8	5.4	-77.67
	606	1.2	3.4	0.3	3.4	1.1	-82.86
Min	Cent	-5.5	-0.5	-1.2	-0.4	-5.7	-79.90
	599	-6.5	-2.5	-1.4	-1.3	-6.7	-67.13
	600	-4.8	-0.9	-1.4	-0.1	-5.1	-75.42
	607	-4.5	-0.0	-1.2	0.2	-4.6	-80.20
	606	-6.3	-0.7	-1.0	-0.7	-6.4	-83.07

	NODE	Vxx	Vyy
Max	Cent	-2.8	-0.6
	599	-2.8	-0.3
	600	-2.8	-0.1
	607	-2.9	-0.1
	606	-2.9	-0.3
Min	Cent	-9.3	-7.4
	599	-9.4	-7.0
	600	-9.4	-7.7
	607	-9.2	-7.7

		606	-9.2	-7.0			

LC		NODE	Fxx	Fyy	Fxy	Fmax	Fmin	ANGLE
RC ENV~2	Max	Cent	-0.6	1.4	0.1	1.4	-0.6	-88.12
		599	-0.6	1.4	0.1	1.4	-0.6	-88.03
		600	-0.6	1.5	0.1	1.5	-0.6	-88.11
		607	-0.6	1.5	0.1	1.5	-0.6	-88.20
		606	-0.6	1.4	0.1	1.4	-0.6	-88.13
	Min	Cent	-2.8	0.6	-0.2	0.6	-2.8	86.66
		599	-2.7	0.6	-0.2	0.6	-2.7	89.67
		600	-2.7	0.5	-0.2	0.5	-2.7	86.51
		607	-2.9	0.5	-0.2	0.5	-2.9	86.26
		606	-2.9	0.6	-0.2	0.6	-2.9	89.67

		NODE	Mxx	Myy	Mxy	Mmax	Mmin	ANGLE
	Max	Cent	1.4	2.6	-0.4	2.8	0.9	-73.95
		599	-0.8	0.6	-0.7	1.0	-1.6	-71.72
		600	2.7	2.7	-0.5	3.5	1.6	-53.43
		607	3.6	4.8	-0.1	4.9	3.5	-78.25
		606	0.2	2.3	-0.2	2.4	0.2	-83.30
	Min	Cent	-1.8	0.4	-0.8	0.5	-1.9	-74.02
		599	-3.4	-1.5	-1.0	-0.9	-3.5	-48.79
		600	-0.3	-0.3	-1.0	0.5	-0.7	-54.80
		607	-0.1	1.8	-0.6	1.9	-0.2	-78.72
		606	-3.4	0.6	-0.6	0.6	-3.4	-81.02

		NODE	Vxx	Vyy
	Max	Cent	-4.0	-0.9
		599	-4.1	-0.8
		600	-4.1	-1.1
		607	-4.0	-1.1
		606	-4.0	-0.8
	Min	Cent	-6.9	-4.8
		599	-7.0	-4.6
		600	-7.0	-5.1
		607	-6.9	-5.1
		606	-6.9	-4.6

ELEM	MAT	SEC	LC		NODE	Fxx	Fyy	Fxy	Fmax	Fmin	ANGLE
569	1	1	SX (RS)		Cent	3.4	1.1	0.7	3.7	0.9	16.29
					600	2.9	0.7	0.7	3.1	0.5	16.67
					601	2.9	1.6	0.7	3.3	1.3	24.23
					608	4.0	1.6	0.7	4.2	1.4	16.11
					607	4.0	0.7	0.7	4.1	0.5	12.12

		NODE	Mxx	Myy	Mxy	Mmax	Mmin	ANGLE
		Cent	5.8	2.4	0.7	5.9	2.3	10.78
		600	5.0	2.2	0.5	5.0	2.1	9.70
		601	6.5	0.6	0.6	6.6	0.6	5.93
		608	7.8	5.0	0.7	8.0	4.8	13.09
		607	3.9	2.2	0.6	4.1	2.0	16.69

		NODE	Vxx	Vyy
		Cent	4.7	4.3
		600	3.4	0.3
		601	3.4	8.2
		608	6.0	8.2
		607	6.0	0.3

LC		NODE	Fxx	Fyy	Fxy	Fmax	Fmin	ANGLE
SY (RS)		Cent	1.1	0.6	2.1	3.0	-1.3	41.47
		600	1.2	0.3	2.1	2.9	-1.4	39.05
		601	1.2	1.5	2.1	3.4	-0.8	47.01
		608	1.3	1.5	2.1	3.5	-0.8	46.43
		607	1.3	0.3	2.1	2.9	-1.4	38.49

		NODE	Mxx	Myy	Mxy	Mmax	Mmin	ANGLE
		Cent	0.8	1.1	0.7	1.7	0.2	51.79

600	0.9	1.6	0.9	2.2	0.3	55.83
601	1.8	3.9	0.9	4.2	1.4	69.77
608	1.4	3.4	0.4	3.4	1.4	79.12
607	0.5	2.4	0.4	2.4	0.5	78.61

	NODE	Vxx	Vyy
	Cent	1.9	5.9
	600	3.1	1.1
	601	3.1	13.0
	608	1.3	13.0
	607	1.3	1.1

LC		NODE	Fxx	Fyy	Fxy	Fmax	Fmin	ANGLE
RC ENV~1	Max	Cent	1.7	2.4	1.9	2.7	1.4	59.89
		600	1.4	1.8	1.9	2.4	0.9	55.39
		601	1.4	3.1	1.9	3.5	1.2	63.97
		608	2.0	3.1	1.9	3.5	1.8	65.39
		607	2.0	1.8	1.9	2.3	1.2	31.16
	Min	Cent	-5.5	-0.2	-2.3	0.0	-5.6	-79.52
		600	-4.8	0.1	-2.3	0.3	-4.9	-78.64
		601	-4.8	-0.5	-2.3	-0.3	-4.9	-77.11
		608	-6.2	-0.5	-2.3	-0.3	-6.3	-80.23
		607	-6.2	0.1	-2.3	0.3	-6.3	-81.16

		NODE	Mxx	Myy	Mxy	Mmax	Mmin	ANGLE
	Max	Cent	8.5	7.3	-0.2	9.2	6.1	-39.67
		600	4.7	3.9	-0.0	4.9	3.7	-23.70
		601	13.3	6.8	-0.3	13.8	6.6	-14.35
		608	14.4	14.5	0.1	15.6	13.2	-45.87
		607	3.6	6.2	0.3	6.3	3.5	-82.81
	Min	Cent	-3.4	0.7	-1.6	1.2	-3.9	-71.81
		600	-5.2	-1.0	-1.8	-0.1	-5.6	-74.40
		601	-1.1	-0.9	-2.2	3.1	-1.9	-66.65
		608	-2.4	1.0	-1.4	1.5	-2.9	-69.96
		607	-4.9	-0.2	-1.0	0.1	-5.1	-64.75

		NODE	Vxx	Vyy
	Max	Cent	-5.2	2.5
		600	-6.2	-0.1
		601	-6.2	7.3
		608	-4.2	7.3
		607	-4.2	-0.1
	Min	Cent	-19.4	-12.0
		600	-18.5	-7.7
		601	-18.5	-18.7
		608	-20.3	-18.7
		607	-20.3	-7.7

LC		NODE	Fxx	Fyy	Fxy	Fmax	Fmin	ANGLE
RC ENV~2	Max	Cent	-0.4	1.8	0.0	1.8	-0.4	-83.65
		600	-0.5	1.3	0.0	1.4	-0.5	-82.44
		601	-0.5	2.2	0.0	2.3	-0.5	-83.61
		608	-0.4	2.2	0.0	2.3	-0.4	-84.53
		607	-0.4	1.3	0.0	1.4	-0.4	-83.68
	Min	Cent	-3.9	0.4	-0.7	0.4	-4.0	87.35
		600	-3.4	0.5	-0.7	0.5	-3.5	87.66
		601	-3.4	0.4	-0.7	0.4	-3.5	87.31
		608	-4.4	0.4	-0.7	0.4	-4.4	86.96
		607	-4.4	0.5	-0.7	0.5	-4.4	87.40

		NODE	Mxx	Myy	Mxy	Mmax	Mmin	ANGLE
	Max	Cent	5.9	5.3	-0.3	6.6	4.3	-43.27
		600	2.2	2.6	-0.5	3.5	1.2	-56.12
		601	9.5	3.9	-0.6	9.9	3.5	-15.54
		608	10.2	10.4	-0.0	11.2	9.4	-48.37
		607	2.1	4.4	0.1	4.4	2.1	-82.61
	Min	Cent	1.8	1.9	-1.2	2.3	1.4	-48.63
		600	-0.7	-0.4	-1.2	0.4	-1.1	-59.41
		601	4.2	1.5	-1.7	4.4	1.5	-16.54
		608	4.2	4.2	-0.9	4.5	3.9	-43.87
		607	-1.3	1.6	-0.5	1.6	-1.3	-86.10

	NODE	Vxx	Vyy
Max	Cent	-7.9	-3.2
	600	-8.1	-1.1
	601	-8.1	-4.5
	608	-7.6	-4.5
	607	-7.6	-1.1
Min	Cent	-14.3	-8.3
	600	-13.6	-5.1
	601	-13.6	-12.1
	608	-14.9	-12.1
	607	-14.9	-5.1

ELEM	MAT	SEC	LC	NODE	Fxx	Fyy	Fxy	Fmax	Fmin	ANGLE
570	1	1	SX (RS)	Cent	6.0	1.1	3.2	7.5	-0.5	26.11
				601	0.5	1.2	3.2	4.0	-2.3	48.03
				227	0.5	1.4	3.2	4.1	-2.3	48.75
				13	11.9	1.4	3.2	12.8	0.5	15.48
				608	11.9	1.2	3.2	12.7	0.3	15.29

	NODE	Mxx	Myy	Mxy	Mmax	Mmin	ANGLE
	Cent	12.3	3.1	2.4	12.9	2.6	13.73
	601	7.1	0.7	1.4	7.4	0.4	11.48
	227	4.2	1.1	7.8	10.6	-5.4	39.42
	13	38.6	7.7	7.4	40.3	6.1	12.77
	608	7.8	4.9	1.8	8.7	4.0	26.12

	NODE	Vxx	Vyy
	Cent	17.3	4.1
	601	19.6	8.2
	227	19.6	0.2
	13	54.3	0.2
	608	54.3	8.2

LC	NODE	Fxx	Fyy	Fxy	Fmax	Fmin	ANGLE
SY (RS)	Cent	1.8	5.0	4.6	8.3	-1.5	54.33
	601	0.6	1.5	4.6	5.7	-3.6	47.71
	227	0.6	11.4	4.6	13.1	-1.1	69.73
	13	3.7	11.4	4.6	13.5	1.5	64.97
	608	3.7	1.5	4.6	7.3	-2.2	38.32

	NODE	Mxx	Myy	Mxy	Mmax	Mmin	ANGLE
	Cent	2.9	7.7	2.1	8.4	2.1	69.49
	601	1.1	3.5	0.6	3.6	1.0	77.03
	227	3.6	5.4	2.5	7.1	1.9	54.91
	13	9.6	25.3	5.3	26.9	8.0	73.06
	608	1.6	3.4	5.1	7.6	-2.6	50.03

	NODE	Vxx	Vyy
	Cent	5.0	12.4
	601	7.4	13.0
	227	7.4	37.6
	13	12.0	37.6
	608	12.0	13.0

LC		NODE	Fxx	Fyy	Fxy	Fmax	Fmin	ANGLE
RC ENV~1	Max	Cent	3.3	5.5	3.3	6.9	0.4	66.81
		601	0.4	2.4	3.3	5.9	-0.5	-53.49
		227	0.4	11.5	3.3	12.4	-0.6	74.57
		13	6.7	11.5	3.3	12.3	0.8	76.44
		608	6.7	2.4	3.3	7.4	1.5	19.52
	Min	Cent	-9.0	-4.5	-5.9	0.1	-10.9	-61.19
		601	-0.9	-0.6	-5.9	0.5	-6.6	78.93
		227	-0.9	-11.3	-5.9	-0.4	-14.0	38.70
		13	-17.4	-11.3	-5.9	-4.0	-18.7	-39.02
		608	-17.4	-0.6	-5.9	0.8	-18.5	-75.46

	NODE	Mxx	Myy	Mxy	Mmax	Mmin	ANGLE

Max	Cent	27.9	13.9	1.9	27.9	13.9	2.30
	601	15.0	6.6	-0.9	16.9	5.2	-22.24
	227	10.9	5.5	9.8	16.4	2.6	32.95
	13	80.2	41.4	9.8	82.0	36.8	11.73
	608	10.6	13.3	3.2	15.3	10.4	-61.11
Min	Cent	-0.7	-1.5	-2.9	4.6	-2.3	-61.36
	601	-1.0	-0.4	-4.6	4.7	-3.2	-57.74
	227	1.7	-5.3	-5.8	2.3	-6.5	-3.42
	13	-6.9	-9.2	-5.0	9.8	-9.5	-73.42
	608	-4.9	0.5	-6.9	2.3	-6.8	-63.21

	NODE	Vxx	Vyy
Max	Cent	-6.9	-0.8
	601	19.0	7.3
	227	19.0	16.9
	13	6.4	16.9
	608	6.4	7.3
Min	Cent	-54.1	-33.6
	601	-20.2	-18.7
	227	-20.2	-58.4
	13	-118.9	-58.4
	608	-118.9	-18.7

LC		NODE	Fxx	Fyy	Fxy	Fmax	Fmin	ANGLE
RC ENV~2	Max	Cent	-0.2	0.6	-0.0	1.9	-0.2	-67.79
		601	-0.1	1.7	-0.0	4.1	-0.4	-53.76
		227	-0.1	0.1	-0.0	2.9	-0.4	-43.32
		13	-0.1	0.1	-0.0	0.4	-0.3	-76.50
		608	-0.1	1.7	-0.0	2.5	-0.1	-77.42
	Min	Cent	-6.3	-0.1	-3.3	0.0	-7.7	-82.35
		601	-0.5	0.4	-3.3	0.4	-2.8	-87.38
		227	-0.5	-0.9	-3.3	-0.3	-3.8	-57.44
		13	-12.3	-0.9	-3.3	-0.5	-13.2	-67.50
		608	-12.3	0.4	-3.3	0.4	-13.0	-85.85

		NODE	Mxx	Myy	Mxy	Mmax	Mmin	ANGLE
	Max	Cent	20.0	10.1	0.6	20.0	10.1	1.51
		601	10.7	4.2	-1.4	12.2	2.7	-23.13
		227	7.9	0.1	5.6	9.0	-0.3	24.66
		13	57.5	27.8	6.3	58.8	26.5	11.41
		608	6.4	9.6	-0.5	11.1	5.3	-61.28
	Min	Cent	8.7	4.8	-0.8	8.8	4.7	-10.57
		601	4.7	1.7	-3.4	5.3	1.3	-23.48
		227	5.6	-1.6	0.1	6.4	-4.3	14.13
		13	20.9	14.2	0.8	21.0	14.1	6.67
		608	1.7	3.7	-2.7	3.9	1.4	-70.99

	NODE	Vxx	Vyy
Max	Cent	-18.3	-12.7
	601	7.1	-4.5
	227	7.1	-20.3
	13	-30.7	-20.3
	608	-30.7	-4.5
Min	Cent	-39.3	-23.9
	601	-6.0	-12.1
	227	-6.0	-35.6
	13	-85.6	-35.6
	608	-85.6	-12.1

ELEM	MAT	SEC	LC		NODE	Fxx	Fyy	Fxy	Fmax	Fmin	ANGLE
571	1	1	SX	(RS)	Cent	3.4	1.1	0.7	3.6	0.9	15.61
					553	4.0	1.6	0.7	4.1	1.4	15.37
					554	4.0	0.6	0.7	4.1	0.5	11.45
					610	2.9	0.6	0.7	3.1	0.4	16.01
					609	2.9	1.6	0.7	3.2	1.3	23.81

	NODE	Mxx	Myy	Mxy	Mmax	Mmin	ANGLE
	Cent	5.7	2.4	0.8	5.9	2.3	12.21
	553	7.8	5.0	0.7	8.0	4.8	13.23
	554	3.9	2.2	0.6	4.1	2.0	18.13

```
                610        4.8        2.2        0.7        5.0        2.0      13.84
                609        6.4        0.7        0.8        6.5        0.6       7.61

               NODE        Vxx        Vyy
          ---- ------ ---------- ----------
               Cent        4.8        4.4
                553        6.0        8.3
                554        6.0        0.5
                610        3.5        0.5
                609        3.5        8.3


      LC        NODE        Fxx        Fyy        Fxy       Fmax       Fmin      ANGLE
-------- ---- ------ ---------- ---------- ---------- ---------- ---------- ----------
      SY (RS)   Cent        1.2        0.4        1.9        2.7       -1.1      39.56
                553        1.3        1.4        1.9        3.2       -0.6      45.70
                554        1.3        0.5        1.9        2.8       -1.0      39.21
                610        1.2        0.5        1.9        2.8       -1.0      39.58
                609        1.2        1.4        1.9        3.2       -0.6      46.09

               NODE        Mxx        Myy        Mxy       Mmax       Mmin      ANGLE
          ---- ------ ---------- ---------- ---------- ---------- ---------- ----------
               Cent        0.8        1.5        0.8        2.1        0.2      55.82
                553        1.7        6.1        0.5        6.1        1.6      83.11
                554        0.4        0.4        0.5        0.9       -0.1      44.17
                610        1.1        0.9        1.0        2.0       -0.0      42.26
                609        1.4        1.5        1.1        2.5        0.4      46.62

               NODE        Vxx        Vyy
          ---- ------ ---------- ----------
               Cent        1.7        6.2
                553        1.3       13.2
                554        1.3        1.0
                610        3.0        1.0
                609        3.0       13.2


      LC        NODE        Fxx        Fyy        Fxy       Fmax       Fmin      ANGLE
-------- ---- ------ ---------- ---------- ---------- ---------- ---------- ----------
RC ENV~1  Max   Cent        1.7        2.7        1.5        2.9        1.5     -81.43
                553        2.0        3.5        1.5        3.7        1.9     -82.59
                554        2.0        2.1        1.5        2.3        1.3     -81.67
                610        1.4        2.1        1.5        2.3        1.1     -79.70
                609        1.4        3.5        1.5        3.7        1.3     -81.03
          Min   Cent       -6.8       -0.1       -2.3        0.1       -7.0     -77.88
                553       -7.8       -0.5       -2.3       -0.2       -8.0     -78.79
                554       -7.8        0.2       -2.3        0.4       -8.0     -79.85
                610       -5.7        0.2       -2.3        0.4       -6.0     -76.76
                609       -5.7       -0.5       -2.3       -0.2       -6.0     -74.96

               NODE        Mxx        Myy        Mxy       Mmax       Mmin      ANGLE
          ---- ------ ---------- ---------- ---------- ---------- ---------- ----------
          Max   Cent        5.6        4.0        0.0        6.0        2.9     -48.02
                553       11.3       11.7        0.1       13.3        8.7     -55.21
                554        0.3        2.8        0.2        3.2        0.2     -77.92
                610        1.5        0.5        0.1        1.5        0.4     -10.64
                609        9.5        1.4       -0.1        9.9        1.3     -20.48
          Min   Cent       -5.8       -2.1       -3.3       -1.4       -6.4     -64.94
                553       -4.3       -2.3       -3.0       -0.7       -4.8     -69.50
                554       -8.1       -2.2       -2.7       -2.0       -8.7     -77.52
                610       -8.2       -4.5       -3.4       -3.8       -9.5     -68.55
                609       -3.3       -1.8       -3.8        0.2       -4.4     -61.54

               NODE        Vxx        Vyy
          ---- ------ ---------- ----------
          Max   Cent       22.9       12.5
                553       24.2       20.6
                554       24.2        6.0
                610       21.5        6.0
                609       21.5       20.6
          Min   Cent        6.4       -0.7
                553        5.4       -5.9
                554        5.4        2.5
                610        7.4        2.5
                609        7.4       -5.9


      LC        NODE        Fxx        Fyy        Fxy       Fmax       Fmin      ANGLE
-------- ---- ------ ---------- ---------- ---------- ---------- ---------- ----------
```

RC ENV~2	Max	Cent	0.6	2.0	0.1	2.1	0.3	-81.42
		553	0.8	2.5	0.1	2.6	0.1	-82.58
		554	0.8	1.5	0.1	1.6	0.4	-81.66
		610	0.5	1.5	0.1	1.7	0.4	-79.71
		609	0.5	2.5	0.1	2.6	0.1	-81.04
	Min	Cent	-4.7	0.3	-1.0	0.5	-4.9	-81.73
		553	-5.5	0.1	-1.0	0.5	-5.6	-82.12
		554	-5.5	0.4	-1.0	0.6	-5.6	-82.18
		610	-4.0	0.4	-1.0	0.5	-4.2	32.59
		609	-4.0	0.1	-1.0	0.5	-4.2	-82.94

	NODE	Mxx	Myy	Mxy	Mmax	Mmin	ANGLE
Max	Cent	2.0	2.8	-0.7	4.2	0.3	-48.31
	553	7.4	8.3	-0.6	9.4	6.0	-55.23
	554	-3.1	1.9	-0.4	2.2	-3.4	-78.86
	610	-2.4	-0.2	-0.8	0.8	-3.4	-58.58
	609	6.2	1.0	-1.0	7.1	0.1	-19.84
Min	Cent	-3.1	-1.3	-2.3	-0.8	-3.7	-64.75
	553	-0.4	0.6	-2.0	1.1	-1.0	-59.29
	554	-5.8	-1.5	-1.8	-1.3	-6.2	-78.91
	610	-5.9	-3.2	-2.3	-2.7	-6.7	-68.85
	609	-0.4	-1.2	-2.6	0.6	-2.6	-37.16

	NODE	Vxx	Vyy
Max	Cent	16.7	9.1
	553	17.7	13.7
	554	17.7	4.4
	610	15.7	4.4
	609	15.7	13.7
Min	Cent	8.7	3.3
	553	8.5	3.4
	554	8.5	3.2
	610	9.0	3.2
	609	9.0	3.4

ELEM	MAT	SEC	LC		NODE	Fxx	Fyy	Fxy	Fmax	Fmin	ANGLE
572	1	1	SX (RS)		Cent	2.3	0.6	0.4	2.4	0.5	12.92
					554	2.5	0.8	0.4	2.6	0.7	13.04
					555	2.5	0.4	0.4	2.6	0.3	10.79
					611	2.1	0.4	0.4	2.2	0.3	12.82
					610	2.1	0.8	0.4	2.2	0.7	16.02

	NODE	Mxx	Myy	Mxy	Mmax	Mmin	ANGLE
	Cent	3.9	1.8	0.6	4.1	1.7	13.83
	554	4.6	2.3	0.5	4.7	2.2	12.05
	555	3.2	1.5	0.4	3.3	1.4	13.91
	611	3.3	1.3	0.6	3.4	1.1	15.91
	610	4.7	2.1	0.7	4.9	2.0	14.05

	NODE	Vxx	Vyy
	Cent	2.3	0.5
	554	2.3	0.5
	555	2.3	0.6
	611	2.4	0.6
	610	2.4	0.5

LC		NODE	Fxx	Fyy	Fxy	Fmax	Fmin	ANGLE
SY (RS)		Cent	0.8	0.3	1.7	2.2	-1.2	40.82
		554	0.8	0.5	1.7	2.3	-1.0	42.17
		555	0.8	0.2	1.7	2.2	-1.2	39.75
		611	0.8	0.2	1.7	2.2	-1.2	39.88
		610	0.8	0.5	1.7	2.3	-1.1	42.31

	NODE	Mxx	Myy	Mxy	Mmax	Mmin	ANGLE
	Cent	0.5	0.9	0.7	1.4	-0.0	53.27
	554	0.5	0.4	0.9	1.3	-0.4	42.29
	555	0.3	1.4	0.7	1.7	-0.0	62.69
	611	0.6	1.2	0.6	1.6	0.3	58.42
	610	0.8	0.9	0.7	1.5	0.1	47.02

	NODE	Vxx	Vyy
	Cent	0.4	0.3
	554	0.4	1.0
	555	0.4	0.5
	611	0.5	0.5
	610	0.5	1.0

LC		NODE	Fxx	Fyy	Fxy	Fmax	Fmin	ANGLE
RC ENV~1	Max	Cent	1.0	2.2	1.4	2.3	1.0	-83.78
		554	1.1	2.4	1.4	2.5	1.1	-84.25
		555	1.1	2.0	1.4	2.1	1.0	-83.94
		611	1.0	2.0	1.4	2.1	0.9	-83.23
		610	1.0	2.4	1.4	2.5	0.9	-83.62
	Min	Cent	-4.7	0.2	-1.9	0.3	-4.8	-80.35
		554	-5.1	0.1	-1.9	0.2	-5.2	-80.64
		555	-5.1	0.4	-1.9	0.5	-5.2	-81.31
		611	-4.3	0.4	-1.9	0.5	-4.4	-80.05
		610	-4.3	0.1	-1.9	0.2	-4.4	-79.17

	NODE	Mxx	Myy	Mxy	Mmax	Mmin	ANGLE
Max	Cent	-0.6	0.4	0.1	0.7	-0.6	-74.27
	554	2.0	3.3	0.5	3.8	2.0	-75.27
	555	-3.1	0.1	0.4	0.1	-3.1	88.58
	611	-3.3	-1.8	-0.1	-1.8	-3.3	-86.68
	610	1.8	0.5	-0.1	1.8	0.5	-2.50
Min	Cent	-9.8	-3.9	-3.0	-3.4	-10.7	-74.78
	554	-7.2	-2.1	-2.7	-1.9	-7.9	-80.22
	555	-12.0	-3.4	-2.8	-3.1	-12.6	-78.63
	611	-12.7	-5.6	-3.3	-5.1	-13.6	-74.92
	610	-7.8	-4.4	-3.3	-3.7	-9.2	-68.06

	NODE	Vxx	Vyy
Max	Cent	11.6	5.6
	554	11.6	6.0
	555	11.6	5.2
	611	11.5	5.2
	610	11.5	6.0
Min	Cent	3.7	2.8
	554	3.7	2.5
	555	3.7	2.6
	611	3.6	2.6
	610	3.6	2.5

LC		NODE	Fxx	Fyy	Fxy	Fmax	Fmin	ANGLE
RC ENV~2	Max	Cent	0.3	1.6	-0.1	1.7	0.3	-83.75
		554	0.3	1.7	-0.1	1.8	0.3	-84.22
		555	0.3	1.5	-0.1	1.5	0.3	-83.91
		611	0.3	1.5	-0.1	1.5	0.2	-83.21
		610	0.3	1.7	-0.1	1.8	0.2	-83.59
	Min	Cent	-3.3	0.4	-0.5	0.5	-3.4	-74.10
		554	-3.6	0.4	-0.5	0.4	-3.7	-62.39
		555	-3.6	0.5	-0.5	0.5	-3.7	-78.18
		611	-3.1	0.5	-0.5	0.5	-3.1	-79.22
		610	-3.1	0.4	-0.5	0.4	-3.1	-66.62

	NODE	Mxx	Myy	Mxy	Mmax	Mmin	ANGLE
Max	Cent	-4.2	-0.1	-0.5	0.3	-4.4	-75.24
	554	-1.6	2.3	-0.4	2.6	-2.0	-76.41
	555	-6.2	-0.3	-0.3	-0.1	-6.2	-81.70
	611	-6.4	-2.3	-0.6	-1.9	-6.5	-74.59
	610	-2.0	-0.1	-0.7	0.9	-2.9	-57.52
Min	Cent	-7.1	-2.7	-2.0	-2.5	-7.6	-75.95
	554	-5.0	-1.3	-1.8	-1.1	-5.5	-76.26
	555	-8.8	-2.5	-1.8	-2.3	-9.1	-80.01
	611	-9.2	-4.1	-2.2	-3.8	-9.8	-75.87
	610	-5.5	-3.1	-2.2	-2.7	-6.4	-68.46

	NODE	Vxx	Vyy
Max	Cent	8.5	4.2
	554	8.5	4.4

		555	8.5	3.9	
		611	8.4	3.9	
		610	8.4	4.4	
	Min	Cent	4.9	3.1	
		554	5.0	3.2	
		555	5.0	2.9	
		611	4.9	2.9	
		610	4.9	3.2	

ELEM	MAT	SEC	LC		NODE	Fxx	Fyy	Fxy	Fmax	Fmin	ANGLE
573	1	1	SX	(RS)	Cent	1.8	0.4	0.4	1.9	0.3	15.31
					555	1.9	0.5	0.4	2.0	0.4	15.61
					556	1.9	0.2	0.4	2.0	0.1	13.35
					612	1.7	0.2	0.4	1.8	0.1	15.14
					611	1.7	0.5	0.4	1.8	0.4	18.02

		NODE	Mxx	Myy	Mxy	Mmax	Mmin	ANGLE
		Cent	2.9	1.2	0.5	3.0	1.1	14.04
		555	3.5	1.6	0.4	3.6	1.5	11.24
		556	2.5	1.2	0.4	2.5	1.1	14.55
		612	2.4	1.0	0.5	2.6	0.9	17.67
		611	3.4	1.3	0.5	3.5	1.2	13.50

		NODE	Vxx	Vyy
		Cent	2.1	0.4
		555	2.1	0.6
		556	2.1	0.3
		612	2.0	0.3
		611	2.0	0.6

LC		NODE	Fxx	Fyy	Fxy	Fmax	Fmin	ANGLE
SY	(RS)	Cent	0.6	0.3	1.5	2.0	-1.1	41.82
		555	0.6	0.2	1.5	1.9	-1.1	41.58
		556	0.6	0.3	1.5	2.0	-1.1	42.67
		612	0.7	0.3	1.5	2.0	-1.0	41.95
		611	0.7	0.2	1.5	2.0	-1.1	40.87

		NODE	Mxx	Myy	Mxy	Mmax	Mmin	ANGLE
		Cent	0.4	1.2	0.6	1.5	0.1	63.81
		555	0.4	1.4	0.5	1.6	0.2	65.48
		556	0.2	1.1	0.6	1.4	-0.0	64.55
		612	0.5	1.3	0.6	1.6	0.2	62.39
		611	0.5	1.2	0.6	1.5	0.2	61.15

		NODE	Vxx	Vyy
		Cent	0.3	0.2
		555	0.3	0.5
		556	0.3	0.2
		612	0.3	0.2
		611	0.3	0.5

LC		NODE	Fxx	Fyy	Fxy	Fmax	Fmin	ANGLE
RC ENV~1	Max	Cent	0.7	2.1	1.3	2.1	0.7	-84.59
		555	0.8	2.2	1.3	2.3	0.7	-84.94
		556	0.8	1.9	1.3	2.0	0.6	-84.71
		612	0.7	1.9	1.3	2.0	0.6	-84.18
		611	0.7	2.2	1.3	2.3	0.6	-84.46
	Min	Cent	-3.7	0.4	-1.7	0.6	-3.7	-79.72
		555	-3.9	0.3	-1.7	0.4	-4.0	-79.93
		556	-3.9	0.5	-1.7	0.7	-4.0	-80.53
		612	-3.4	0.5	-1.7	0.7	-3.5	-79.45
		611	-3.4	0.3	-1.7	0.4	-3.4	-78.72

		NODE	Mxx	Myy	Mxy	Mmax	Mmin	ANGLE
	Max	Cent	-4.0	-1.2	0.1	-1.2	-4.0	89.37
		555	-2.4	0.3	0.1	0.4	-2.4	-78.86
		556	-5.2	-0.7	0.1	-0.7	-5.2	-88.82
		612	-5.5	-2.3	0.0	-2.3	-5.5	89.56

		611	-2.9	-1.8	0.0	-1.8	-2.9	-89.53
	Min	Cent	-13.1	-4.6	-3.2	-4.1	-13.8	-76.70
		555	-11.7	-3.4	-3.1	-3.0	-12.5	-77.06
		556	-13.6	-3.6	-3.2	-3.1	-14.3	-78.09
		612	-14.4	-5.8	-3.3	-5.2	-15.2	-76.31
		611	-12.5	-5.6	-3.2	-5.0	-13.4	-74.82

	NODE	Vxx	Vyy
Max	Cent	5.3	5.0
	555	5.5	5.2
	556	5.5	4.7
	612	5.2	4.7
	611	5.2	5.2
Min	Cent	0.7	2.7
	555	0.7	2.6
	556	0.7	2.7
	612	0.7	2.7
	611	0.7	2.6

LC		NODE	Fxx	Fyy	Fxy	Fmax	Fmin	ANGLE
RC ENV~2	Max	Cent	0.0	1.5	-0.1	1.5	0.0	-84.56
		555	0.0	1.6	-0.1	1.6	0.0	-84.91
		556	0.0	1.4	-0.1	1.4	0.0	-84.68
		612	0.1	1.4	-0.1	1.4	0.0	-84.16
		611	0.1	1.6	-0.1	1.6	0.0	-84.43
	Min	Cent	-2.6	0.5	-0.4	0.6	-2.6	-81.41
		555	-2.8	0.5	-0.4	0.5	-2.8	-80.71
		556	-2.8	0.6	-0.4	0.6	-2.8	-82.56
		612	-2.4	0.6	-0.4	0.6	-2.4	-82.01
		611	-2.4	0.5	-0.4	0.5	-2.4	-79.85

	NODE	Mxx	Myy	Mxy	Mmax	Mmin	ANGLE
Max	Cent	-6.8	-1.6	-0.4	-1.3	-6.8	-79.29
	555	-5.7	-0.1	-0.4	0.1	-5.8	-79.86
	556	-7.5	-1.0	-0.4	-0.8	-7.6	-81.56
	612	-7.8	-2.9	-0.5	-2.6	-7.9	-78.85
	611	-6.1	-2.3	-0.5	-1.9	-6.2	-75.93
Min	Cent	-9.5	-3.3	-2.1	-3.1	-10.0	-78.02
	555	-8.5	-2.4	-2.0	-2.2	-9.0	-78.42
	556	-10.0	-2.6	-2.1	-2.4	-10.4	-79.50
	612	-10.5	-4.3	-2.2	-4.0	-11.0	-77.59
	611	-9.1	-4.1	-2.1	-3.8	-9.6	-75.97

	NODE	Vxx	Vyy
Max	Cent	3.9	3.7
	555	4.0	3.9
	556	4.0	3.5
	612	3.8	3.5
	611	3.8	3.9
Min	Cent	1.9	2.9
	555	1.9	2.9
	556	1.9	3.0
	612	1.9	3.0
	611	1.9	2.9

ELEM	MAT	SEC	LC		NODE	Fxx	Fyy	Fxy	Fmax	Fmin	ANGLE
574	1	1	SX	(RS)	Cent	1.6	0.2	0.4	1.8	0.1	15.89
					556	1.7	0.3	0.4	1.9	0.2	15.64
					557	1.7	0.2	0.4	1.9	0.1	14.78
					613	1.5	0.2	0.4	1.7	0.1	16.78
					612	1.5	0.3	0.4	1.7	0.2	17.87

	NODE	Mxx	Myy	Mxy	Mmax	Mmin	ANGLE
	Cent	2.2	1.1	0.4	2.3	1.0	17.19
	556	2.6	1.2	0.3	2.6	1.1	12.08
	557	2.1	1.4	0.3	2.2	1.3	18.57
	613	2.0	1.0	0.4	2.1	0.8	21.13
	612	2.5	1.0	0.5	2.6	0.9	16.05

	NODE	Vxx	Vyy

	Cent	2.2	0.5	
	556	2.3	0.3	
	557	2.3	0.7	
	613	2.1	0.7	
	612	2.1	0.3	

LC		NODE	Fxx	Fyy	Fxy	Fmax	Fmin	ANGLE
SY (RS)		Cent	0.5	0.4	1.4	1.9	-0.9	43.81
		556	0.4	0.4	1.4	1.8	-1.0	44.21
		557	0.4	0.5	1.4	1.9	-1.0	45.52
		613	0.6	0.5	1.4	2.0	-0.8	43.38
		612	0.6	0.4	1.4	1.9	-0.9	42.08

	NODE	Mxx	Myy	Mxy	Mmax	Mmin	ANGLE
	Cent	0.3	1.3	0.7	1.6	0.0	63.03
	556	0.3	1.1	0.6	1.4	0.0	62.85
	557	0.2	1.7	0.7	1.9	-0.0	68.55
	613	0.4	1.1	0.7	1.6	-0.0	58.11
	612	0.5	1.3	0.6	1.6	0.1	61.22

	NODE	Vxx	Vyy
	Cent	0.1	0.6
	556	0.2	0.2
	557	0.2	1.3
	613	0.1	1.3
	612	0.1	0.2

LC		NODE	Fxx	Fyy	Fxy	Fmax	Fmin	ANGLE
RC ENV~1	Max	Cent	0.7	2.0	1.3	2.0	0.5	-85.55
		556	0.7	2.1	1.3	2.1	0.6	-85.77
		557	0.7	1.9	1.3	1.9	0.6	-85.66
		613	0.7	1.9	1.3	2.0	0.5	60.38
		612	0.7	2.1	1.3	2.1	0.5	-85.44
	Min	Cent	-3.1	0.4	-1.6	0.7	-3.1	-79.90
		556	-3.3	0.5	-1.6	0.6	-3.3	-80.20
		557	-3.3	0.3	-1.6	0.7	-3.3	-80.43
		613	-2.9	0.3	-1.6	0.7	-2.9	-79.37
		612	-2.9	0.5	-1.6	0.6	-2.9	-79.09

	NODE	Mxx	Myy	Mxy	Mmax	Mmin	ANGLE
Max	Cent	-5.5	-1.3	0.2	-1.3	-5.5	88.01
	556	-5.1	-0.7	0.0	-0.7	-5.1	-87.17
	557	-5.4	0.1	0.2	0.2	-5.4	-79.94
	613	-5.8	-2.1	0.4	-2.1	-5.8	86.07
	612	-5.4	-2.3	0.2	-2.3	-5.4	87.38
Min	Cent	-13.7	-4.3	-3.5	-3.7	-14.5	-76.73
	556	-13.9	-3.7	-3.5	-3.1	-14.8	-77.14
	557	-12.7	-3.2	-3.7	-2.9	-13.6	-76.63
	613	-13.4	-4.9	-3.5	-4.3	-14.3	-76.14
	612	-14.7	-5.9	-3.3	-5.3	-15.5	-76.82

	NODE	Vxx	Vyy
Max	Cent	2.1	4.8
	556	2.2	4.7
	557	2.2	4.8
	613	2.0	4.8
	612	2.0	4.7
Min	Cent	-2.3	2.5
	556	-2.4	2.7
	557	-2.4	1.9
	613	-2.3	1.9
	612	-2.3	2.7

LC		NODE	Fxx	Fyy	Fxy	Fmax	Fmin	ANGLE
RC ENV~2	Max	Cent	-0.2	1.4	-0.1	1.5	-0.2	-85.54
		556	-0.2	1.5	-0.1	1.5	-0.2	-85.76
		557	-0.2	1.4	-0.1	1.4	-0.2	-85.65
		613	-0.1	1.4	-0.1	1.4	-0.1	-85.29
		612	-0.1	1.5	-0.1	1.5	-0.1	-85.42

Min	Cent	-2.2	0.6	-0.3	0.6	-2.2	-84.99
	556	-2.3	0.6	-0.3	0.6	-2.3	-84.97
	557	-2.3	0.7	-0.3	0.7	-2.3	-85.56
	613	-2.0	0.7	-0.3	0.7	-2.1	-85.01
	612	-2.0	0.6	-0.3	0.6	-2.1	-84.26

	NODE	Mxx	Myy	Mxy	Mmax	Mmin	ANGLE
Max	Cent	-7.6	-1.6	-0.4	-1.4	-7.7	-80.65
	556	-7.5	-1.0	-0.5	-0.8	-7.6	-80.63
	557	-7.5	-0.3	-0.4	-0.1	-7.5	-80.98
	613	-7.7	-2.3	-0.3	-2.1	-7.8	-80.62
	612	-7.8	-2.9	-0.3	-2.7	-7.8	-80.25
Min	Cent	-10.0	-3.2	-2.3	-2.8	-10.5	-78.25
	556	-10.2	-2.7	-2.3	-2.3	-10.7	-78.55
	557	-9.4	-1.9	-2.4	-1.6	-9.9	-78.27
	613	-9.9	-3.7	-2.3	-3.3	-10.4	-77.79
	612	-10.7	-4.3	-2.2	-4.0	-11.2	-78.26

	NODE	Vxx	Vyy
Max	Cent	0.4	3.6
	556	0.4	3.5
	557	0.4	3.6
	613	0.4	3.6
	612	0.4	3.5
Min	Cent	-1.4	3.0
	556	-1.4	3.0
	557	-1.4	3.1
	613	-1.4	3.1
	612	-1.4	3.0

ELEM	MAT	SEC	LC		NODE	Fxx	Fyy	Fxy	Fmax	Fmin	ANGLE
575	1	1	SX (RS)		Cent	1.8	0.2	0.4	1.9	0.1	13.63
					557	2.0	0.2	0.4	2.1	0.1	12.39
					558	2.0	0.3	0.4	2.1	0.2	13.04
					614	1.7	0.3	0.4	1.8	0.2	15.76
					613	1.7	0.2	0.4	1.8	0.1	14.84

	NODE	Mxx	Myy	Mxy	Mmax	Mmin	ANGLE
	Cent	2.2	1.6	0.4	2.4	1.4	25.39
	557	2.0	1.3	0.3	2.1	1.2	17.76
	558	2.7	2.2	0.3	2.8	2.0	24.37
	614	2.8	1.9	0.6	3.0	1.6	26.29
	613	1.9	1.0	0.5	2.2	0.8	23.28

	NODE	Vxx	Vyy
	Cent	2.9	0.6
	557	2.8	0.7
	558	2.8	0.5
	614	2.9	0.5
	613	2.9	0.7

LC		NODE	Fxx	Fyy	Fxy	Fmax	Fmin	ANGLE
SY (RS)		Cent	0.5	0.4	1.4	1.8	-0.9	43.55
		557	0.4	0.5	1.4	1.8	-0.9	46.08
		558	0.4	0.5	1.4	1.8	-0.9	46.11
		614	0.7	0.5	1.4	2.0	-0.8	42.68
		613	0.7	0.5	1.4	2.0	-0.8	42.65

	NODE	Mxx	Myy	Mxy	Mmax	Mmin	ANGLE
	Cent	0.4	0.8	1.1	1.7	-0.5	51.47
	557	0.3	1.6	1.2	2.3	-0.4	59.85
	558	0.4	0.7	1.5	2.0	-1.0	48.13
	614	0.7	0.8	1.0	1.7	-0.3	46.37
	613	0.6	1.2	0.7	1.7	0.1	55.59

	NODE	Vxx	Vyy
	Cent	0.3	0.2
	557	0.3	1.3
	558	0.3	1.5

		614	0.4	1.5			
		613	0.4	1.3			

LC		NODE	Fxx	Fyy	Fxy	Fmax	Fmin	ANGLE
RC ENV~1	Max	Cent	0.9	2.0	1.3	2.0	0.7	-86.38
		557	1.1	2.0	1.3	2.0	0.7	-86.52
		558	1.1	1.9	1.3	2.0	0.8	-86.49
		614	0.8	1.9	1.3	2.1	0.7	59.51
		613	0.8	2.0	1.3	2.0	0.6	59.38
	Min	Cent	-2.7	0.4	-1.5	0.6	-2.8	-81.36
		557	-2.9	0.3	-1.5	0.7	-3.0	-81.93
		558	-2.9	0.3	-1.5	0.6	-3.0	-81.73
		614	-2.5	0.3	-1.5	0.6	-2.5	-80.52
		613	-2.5	0.3	-1.5	0.7	-2.5	-80.78

		NODE	Mxx	Myy	Mxy	Mmax	Mmin	ANGLE
	Max	Cent	-4.8	-0.2	0.7	0.2	-4.8	-80.07
		557	-6.0	0.0	0.6	0.1	-6.0	85.38
		558	-3.2	3.1	1.0	3.4	-3.2	-78.72
		614	-3.4	-0.1	0.9	-0.0	-3.4	-82.03
		613	-6.2	-2.1	0.6	-2.1	-6.2	84.22
	Min	Cent	-11.5	-3.3	-3.7	-3.2	-12.8	-83.13
		557	-13.7	-3.3	-4.0	-2.8	-14.8	-83.46
		558	-9.4	-2.2	-4.1	-2.1	-10.9	-82.97
		614	-10.1	-4.0	-3.5	-3.9	-11.4	-82.52
		613	-14.3	-5.0	-3.4	-4.5	-15.0	-77.75

		NODE	Vxx	Vyy
	Max	Cent	-0.3	5.4
		557	-0.5	4.8
		558	-0.5	6.1
		614	-0.2	6.1
		613	-0.2	4.8
	Min	Cent	-8.5	2.9
		557	-8.6	1.9
		558	-8.6	2.3
		614	-8.3	2.3
		613	-8.3	1.9

LC		NODE	Fxx	Fyy	Fxy	Fmax	Fmin	ANGLE
RC ENV~2	Max	Cent	-0.4	1.4	-0.0	1.4	-0.4	-86.40
		557	-0.5	1.4	-0.0	1.5	-0.5	-86.54
		558	-0.5	1.4	-0.0	1.4	-0.5	-86.51
		614	-0.3	1.4	-0.0	1.4	-0.3	-86.25
		613	-0.3	1.4	-0.0	1.5	-0.3	-86.29
	Min	Cent	-1.9	0.7	-0.2	0.7	-1.9	-88.02
		557	-2.0	0.6	-0.2	0.6	-2.0	-88.04
		558	-2.0	0.8	-0.2	0.8	-2.0	-88.23
		614	-1.8	0.8	-0.2	0.8	-1.8	-88.01
		613	-1.8	0.6	-0.2	0.6	-1.8	-87.76

		NODE	Mxx	Myy	Mxy	Mmax	Mmin	ANGLE
	Max	Cent	-7.0	-0.3	-0.2	-0.2	-7.0	-81.31
		557	-8.0	-0.5	-0.5	-0.2	-8.0	-80.67
		558	-5.7	2.0	-0.4	2.3	-5.7	-79.97
		614	-6.0	-0.4	0.0	-0.3	-6.0	-83.59
		613	-8.1	-2.4	-0.1	-2.3	-8.1	-82.82
	Min	Cent	-8.5	-2.0	-2.4	-1.7	-9.3	-86.72
		557	-10.1	-2.1	-2.6	-1.7	-10.7	-77.95
		558	-7.0	-0.1	-2.7	0.0	-7.9	-84.94
		614	-7.5	-2.1	-2.2	-2.1	-8.3	-88.07
		613	-10.5	-3.8	-2.2	-3.5	-10.9	-79.54

		NODE	Vxx	Vyy
	Max	Cent	-3.1	4.1
		557	-3.2	3.6
		558	-3.2	4.6
		614	-3.0	4.6
		613	-3.0	3.6
	Min	Cent	-6.0	3.3
		557	-6.1	3.1

					558	-6.1	3.4				
					614	-5.9	3.4				
					613	-5.9	3.1				

ELEM	MAT	SEC	LC		NODE	Fxx	Fyy	Fxy	Fmax	Fmin	ANGLE
576	1	1	SX	(RS)	Cent	2.6	0.6	0.4	2.7	0.5	10.12
					558	3.1	0.2	0.4	3.2	0.2	7.29
					559	3.1	1.0	0.4	3.2	0.9	9.71
					615	2.1	1.0	0.4	2.2	0.9	16.77
					614	2.1	0.2	0.4	2.2	0.1	10.83

	NODE	Mxx	Myy	Mxy	Mmax	Mmin	ANGLE
	Cent	4.0	2.3	0.6	4.2	2.0	17.98
	558	1.9	2.0	0.5	2.4	1.5	47.54
	559	6.7	5.6	0.6	6.9	5.4	23.99
	615	4.8	0.6	0.6	4.8	0.5	7.59
	614	2.9	1.9	0.5	3.1	1.7	21.78

	NODE	Vxx	Vyy
	Cent	6.3	5.8
	558	8.0	0.5
	559	8.0	11.1
	615	4.7	11.1
	614	4.7	0.5

LC		NODE	Fxx	Fyy	Fxy	Fmax	Fmin	ANGLE
SY	(RS)	Cent	0.7	1.0	1.4	2.3	-0.6	47.55
		558	0.2	0.5	1.4	1.8	-1.1	48.35
		559	0.2	2.1	1.4	2.8	-0.6	62.08
		615	1.3	2.1	1.4	3.2	0.2	52.71
		614	1.3	0.5	1.4	2.4	-0.5	37.05

	NODE	Mxx	Myy	Mxy	Mmax	Mmin	ANGLE
	Cent	0.3	2.0	1.2	2.7	-0.3	62.00
	558	0.5	0.7	0.2	0.9	0.3	56.73
	559	2.1	10.8	0.2	10.8	2.1	88.60
	615	2.3	3.2	1.7	4.5	1.0	52.39
	614	1.3	0.9	1.7	2.8	-0.6	41.03

	NODE	Vxx	Vyy
	Cent	2.3	11.8
	558	0.5	1.5
	559	0.5	25.0
	615	5.1	25.0
	614	5.1	1.5

LC		NODE	Fxx	Fyy	Fxy	Fmax	Fmin	ANGLE
RC ENV~1	Max	Cent	1.8	1.9	1.3	2.5	1.2	62.63
		558	2.2	2.0	1.3	2.3	0.9	14.04
		559	2.2	2.9	1.3	3.4	1.6	71.67
		615	1.3	2.9	1.3	3.5	1.2	65.58
		614	1.3	2.0	1.3	2.4	0.8	53.21
	Min	Cent	-3.5	-0.2	-1.5	0.3	-3.5	-83.30
		558	-4.0	0.3	-1.5	0.7	-4.1	-84.62
		559	-4.0	-1.3	-1.5	-0.1	-4.1	-83.55
		615	-2.9	-1.3	-1.5	-0.2	-3.2	-52.59
		614	-2.9	0.3	-1.5	0.7	-2.9	-82.93

	NODE	Mxx	Myy	Mxy	Mmax	Mmin	ANGLE
Max	Cent	-0.5	4.6	1.3	4.7	-0.7	-83.52
	558	-5.2	2.5	-0.1	3.0	-5.2	-78.98
	559	4.4	14.1	0.3	14.1	4.3	-89.87
	615	2.9	5.7	2.3	5.7	1.8	-89.61
	614	-3.9	-0.3	2.0	-0.1	-4.0	79.30
Min	Cent	-8.5	-1.9	-3.6	-1.8	-8.6	-84.76
	558	-11.2	-2.2	-4.5	-2.1	-12.7	-81.22
	559	-8.9	-7.4	-4.1	-4.3	-9.0	-8.45
	615	-6.7	-2.7	-2.8	-2.1	-6.7	-62.34

614	-11.2	-4.1	-3.1	-4.1	-12.3	-87.85

	NODE	Vxx	Vyy
Max	Cent	-1.2	16.5
	558	0.7	6.1
	559	0.7	30.7
	615	-2.7	30.7
	614	-2.7	6.1
Min	Cent	-18.3	-7.1
	558	-17.9	2.3
	559	-17.9	-19.4
	615	-18.7	-19.4
	614	-18.7	2.3

LC		NODE	Fxx	Fyy	Fxy	Fmax	Fmin	ANGLE
RC ENV~2	Max	Cent	-0.7	1.4	0.0	1.4	-0.7	-86.57
		558	-0.8	1.5	0.0	1.5	-0.8	-86.76
		559	-0.8	1.4	0.0	1.4	-0.8	-89.20
		615	-0.5	1.4	0.0	1.4	-0.5	-89.11
		614	-0.5	1.5	0.0	1.5	-0.5	-86.57
	Min	Cent	-1.6	0.8	-0.2	0.8	-1.6	-89.80
		558	-1.7	0.7	-0.2	0.7	-1.7	88.25
		559	-1.7	0.7	-0.2	0.7	-1.7	-83.78
		615	-1.5	0.7	-0.2	0.7	-1.6	-83.68
		614	-1.5	0.7	-0.2	0.7	-1.6	87.87

	NODE	Mxx	Myy	Mxy	Mmax	Mmin	ANGLE
Max	Cent	-3.4	3.1	0.2	3.1	-3.5	-85.19
	558	-7.1	1.6	-0.5	1.9	-7.1	-80.13
	559	0.5	7.9	-0.1	8.0	0.4	-82.49
	615	1.0	3.8	0.8	3.9	0.9	87.05
	614	-6.7	-0.6	0.4	-0.6	-6.8	-88.53
Min	Cent	-5.3	0.3	-2.3	0.3	-6.1	-89.75
	558	-8.3	-0.4	-3.0	-0.2	-9.2	-85.24
	559	-3.1	3.2	-2.7	3.3	-3.6	-87.22
	615	-2.4	0.4	-1.6	0.6	-2.8	75.09
	614	-8.3	-2.2	-1.9	-2.2	-8.9	87.25

	NODE	Vxx	Vyy
Max	Cent	-7.3	6.7
	558	-7.0	4.6
	559	-7.0	8.8
	615	-7.7	8.8
	614	-7.7	4.6
Min	Cent	-13.1	3.8
	558	-12.8	3.4
	559	-12.8	3.9
	615	-13.3	3.9
	614	-13.3	3.4

ELEM	MAT	SEC	LC		NODE	Fxx	Fyy	Fxy	Fmax	Fmin	ANGLE
577	1	1	SX (RS)		Cent	4.8	0.2	2.5	5.9	-0.9	23.87
					559	10.6	0.5	2.5	11.2	-0.1	13.26
					12	10.6	1.0	2.5	11.2	0.3	13.77
					616	1.0	1.0	2.5	3.5	-1.5	44.55
					615	1.0	0.5	2.5	3.3	-1.8	42.11

NODE	Mxx	Myy	Mxy	Mmax	Mmin	ANGLE
Cent	12.6	3.2	3.3	13.7	2.2	17.72
559	6.5	5.6	2.1	8.2	3.9	38.68
12	47.6	9.5	10.0	50.1	7.0	13.89
616	9.1	1.8	10.6	16.6	-5.7	35.52
615	5.5	0.4	1.6	5.9	-0.0	15.80

NODE	Vxx	Vyy
Cent	23.3	5.5
559	72.2	11.1
12	72.2	0.0
616	25.6	0.0
615	25.6	11.1

LC		NODE	Fxx	Fyy	Fxy	Fmax	Fmin	ANGLE
SY (RS)		Cent	0.6	6.2	4.3	8.5	-1.8	61.32
		559	1.5	2.1	4.3	6.2	-2.5	46.95
		12	1.5	14.4	4.3	15.7	0.2	72.98
		616	0.4	14.4	4.3	15.6	-0.9	74.12
		615	0.4	2.1	4.3	5.7	-3.2	50.75

		NODE	Mxx	Myy	Mxy	Mmax	Mmin	ANGLE
		Cent	2.4	9.9	3.4	11.2	1.1	68.61
		559	1.8	10.7	9.5	16.8	-4.3	57.53
		12	7.4	41.4	8.9	43.6	5.2	76.19
		616	5.4	6.3	1.4	7.3	4.4	53.96
		615	1.4	2.5	0.7	2.9	1.0	63.75

		NODE	Vxx	Vyy
		Cent	4.3	20.8
		559	2.2	25.0
		12	2.2	66.7
		616	10.7	66.7
		615	10.7	25.0

LC		NODE	Fxx	Fyy	Fxy	Fmax	Fmin	ANGLE
RC ENV~1	Max	Cent	4.0	7.1	4.3	9.1	-0.3	65.29
		559	9.7	2.9	4.3	10.4	0.7	15.17
		12	9.7	15.4	4.3	16.6	1.3	74.99
		616	0.3	15.4	4.3	16.5	-0.4	75.82
		615	0.3	2.9	4.3	5.9	-0.4	55.68
	Min	Cent	-5.6	-5.2	-4.4	1.2	-8.1	77.97
		559	-11.5	-1.3	-4.4	0.8	-12.1	-78.18
		12	-11.5	-13.3	-4.4	-0.9	-14.9	-19.47
		616	-2.5	-13.3	-4.4	0.3	-14.8	-17.91
		615	-2.5	-1.3	-4.4	1.0	-5.6	-85.15

		NODE	Mxx	Myy	Mxy	Mmax	Mmin	ANGLE
	Max	Cent	14.9	13.8	4.7	17.0	11.4	24.79
		559	0.2	13.3	10.2	17.9	-0.7	65.51
		12	62.6	57.9	9.9	65.1	37.9	14.15
		616	11.4	2.4	11.3	17.3	1.6	30.15
		615	4.3	6.1	3.1	7.0	2.0	55.79
	Min	Cent	-10.3	-6.0	-2.4	0.6	-10.7	-18.77
		559	-12.8	-8.1	-8.8	-2.8	-16.9	-82.06
		12	-32.5	-25.0	-10.2	9.4	-35.0	-76.35
		616	-7.4	-10.3	-9.9	-3.7	-16.5	-5.89
		615	-6.7	-1.9	-1.7	-1.3	-6.7	56.88

		NODE	Vxx	Vyy
	Max	Cent	3.3	40.9
		559	38.9	30.7
		12	38.9	100.7
		616	18.8	100.7
		615	18.8	30.7
	Min	Cent	-48.0	-1.0
		559	-105.5	-19.4
		12	-105.5	-32.6
		616	-32.3	-32.6
		615	-32.3	-19.4

LC		NODE	Fxx	Fyy	Fxy	Fmax	Fmin	ANGLE
RC ENV~2	Max	Cent	-0.4	1.7	0.4	1.8	-0.6	-81.75
		559	0.4	1.4	0.4	1.4	-0.0	-79.03
		12	0.4	2.0	0.4	2.1	0.1	-81.47
		616	-0.2	2.0	0.4	2.1	-0.3	-83.41
		615	-0.2	1.4	0.4	1.4	-0.4	-82.01
	Min	Cent	-1.8	0.8	-0.6	0.9	-1.8	88.94
		559	-2.6	0.7	-0.6	0.7	-2.6	85.78
		12	-2.6	0.9	-0.6	1.0	-2.6	82.87
		616	-1.8	0.9	-0.6	1.0	-1.8	88.84
		615	-1.8	0.7	-0.6	0.8	-1.8	81.29

	NODE	Mxx	Myy	Mxy	Mmax	Mmin	ANGLE
Max	Cent	8.5	8.7	1.6	9.5	7.7	47.33
	559	-5.5	6.6	1.0	6.7	-5.5	86.57
	12	32.1	28.1	0.4	32.8	27.4	-21.41
	616	7.7	-3.0	1.6	7.9	-3.1	6.88
	615	2.2	4.1	1.9	4.9	0.9	55.48
Min	Cent	1.3	3.9	-1.3	4.3	1.2	80.97
	559	-7.5	2.3	-1.7	2.4	-7.6	-84.69
	12	9.7	16.3	-3.4	16.3	9.7	86.57
	616	0.9	-4.0	-2.7	1.3	-4.8	3.81
	615	-1.7	0.6	-0.8	0.9	-2.1	67.53

	NODE	Vxx	Vyy
Max	Cent	-19.3	29.9
	559	-25.7	8.8
	12	-25.7	52.6
	616	-4.2	52.6
	615	-4.2	8.8
Min	Cent	-34.4	19.8
	559	-60.1	3.9
	12	-60.1	33.1
	616	-14.3	33.1
	615	-14.3	3.9

ELEM	MAT	SEC	LC	NODE	Fxx	Fyy	Fxy	Fmax	Fmin	ANGLE
578	1	1	SX (RS)	Cent	0.7	0.8	0.9	1.7	-0.2	46.92
				177	0.5	1.1	0.9	1.8	-0.2	54.54
				609	0.5	0.8	0.9	1.6	-0.3	49.68
				617	1.2	0.8	0.9	1.9	0.0	38.89
				180	1.2	1.1	0.9	2.1	0.2	43.98

NODE	Mxx	Myy	Mxy	Mmax	Mmin	ANGLE
Cent	2.8	1.0	1.4	3.6	0.3	28.48
177	4.2	1.1	0.9	4.5	0.8	14.84
609	7.5	3.2	1.6	8.0	2.7	18.00
617	3.9	0.6	1.7	4.6	-0.1	22.67
180	4.0	1.3	1.0	4.4	0.9	18.28

NODE	Vxx	Vyy
Cent	9.9	2.5
177	19.5	0.2
609	19.5	5.2
617	0.2	5.2
180	0.2	0.2

LC	NODE	Fxx	Fyy	Fxy	Fmax	Fmin	ANGLE
SY (RS)	Cent	0.7	2.5	1.9	3.7	-0.5	57.76
	177	1.1	3.4	1.9	4.5	0.0	60.63
	609	1.1	1.7	1.9	3.3	-0.5	49.40
	617	0.5	1.7	1.9	3.1	-0.9	53.85
	180	0.5	3.4	1.9	4.3	-0.5	63.82

NODE	Mxx	Myy	Mxy	Mmax	Mmin	ANGLE
Cent	0.8	1.0	0.2	1.1	0.6	58.24
177	3.0	2.7	0.3	3.2	2.5	32.30
609	1.5	0.8	0.1	1.5	0.8	10.50
617	0.6	0.9	0.2	1.0	0.5	69.50
180	0.8	1.0	0.3	1.2	0.6	52.97

NODE	Vxx	Vyy
Cent	3.8	3.8
177	7.2	5.4
609	7.2	2.5
617	0.6	2.5
180	0.6	5.4

LC	NODE	Fxx	Fyy	Fxy	Fmax	Fmin	ANGLE

LC		NODE	Fxx	Fyy	Fxy	Fmax	Fmin	ANGLE
RC ENV~2	Max	Cent	-0.0	0.8	0.1	1.5	-0.0	-62.75
		177	-0.2	1.2	0.1	2.0	-0.2	-59.04
		609	-0.2	0.7	0.1	1.4	-0.2	-54.58
		617	0.1	0.7	0.1	1.1	0.1	-64.46
		180	0.1	1.2	0.1	1.7	0.0	-68.59
	Min	Cent	-1.1	0.4	-1.4	0.4	-1.8	-76.36
		177	-0.5	0.2	-1.4	0.2	-1.2	70.62
		609	-0.5	0.2	-1.4	0.5	-1.5	-78.22
		617	-1.7	0.2	-1.4	0.5	-2.5	-78.04
		180	-1.7	0.2	-1.4	0.3	-2.3	46.43

		NODE	Mxx	Myy	Mxy	Mmax	Mmin	ANGLE
	Max	Cent	5.5	-1.2	-0.4	5.5	-1.2	-5.92
		177	5.9	0.1	-0.6	6.1	-0.0	-9.10
		609	7.8	3.1	-0.5	7.9	2.9	-9.36
		617	2.5	-3.8	-0.4	2.5	-3.8	-4.45
		180	8.4	-2.5	-0.5	8.5	-2.6	-4.98
	Min	Cent	2.1	-2.4	-1.6	2.4	-2.9	-14.51
		177	3.2	-0.7	-1.7	3.7	-1.1	-18.93
		609	-0.3	-1.5	-1.8	0.7	-2.5	-33.32
		617	-1.3	-4.8	-1.6	-0.7	-5.0	-22.49
		180	4.0	-3.6	-1.5	4.2	-3.8	-7.34

		NODE	Vxx	Vyy
	Max	Cent	10.0	10.5
		177	10.8	8.2
		609	10.8	12.9
		617	10.3	12.9
		180	10.3	8.2
	Min	Cent	1.4	4.5
		177	-7.1	4.7
		609	-7.1	4.3
		617	8.9	4.3
		180	8.9	4.7

ELEM	MAT	SEC	LC		NODE	Fxx	Fyy	Fxy	Fmax	Fmin	ANGLE
579	1	1	SX	(RS)	Cent	2.0	0.6	1.3	2.7	-0.2	30.47
					609	3.1	1.0	1.3	3.7	0.4	25.05
					610	3.1	0.5	1.3	3.6	-0.0	22.14
					618	0.9	0.5	1.3	2.0	-0.6	40.13
					617	0.9	1.0	1.3	2.2	-0.3	45.50

		NODE	Mxx	Myy	Mxy	Mmax	Mmin	ANGLE
		Cent	5.1	1.4	0.8	5.2	1.2	11.94
		609	6.9	3.1	0.8	7.1	2.9	11.69
		610	4.7	1.6	0.8	4.9	1.4	13.49
		618	4.5	0.8	0.9	4.7	0.6	12.83
		617	4.1	0.6	0.9	4.4	0.4	13.73

		NODE	Vxx	Vyy
		Cent	1.6	3.4
		609	3.5	5.2
		610	3.5	1.6
		618	0.4	1.6
		617	0.4	5.2

LC		NODE	Fxx	Fyy	Fxy	Fmax	Fmin	ANGLE
SY	(RS)	Cent	0.8	1.0	2.3	3.2	-1.4	45.77
		609	1.5	1.9	2.3	4.0	-0.6	47.96
		610	1.5	0.1	2.3	3.2	-1.6	36.77
		618	0.3	0.1	2.3	2.5	-2.1	43.83
		617	0.3	1.9	2.3	3.5	-1.3	54.85

		NODE	Mxx	Myy	Mxy	Mmax	Mmin	ANGLE
		Cent	0.6	0.6	0.4	1.0	0.2	44.98
		609	1.5	1.2	0.4	1.8	0.9	36.61
		610	1.1	0.9	0.5	1.5	0.5	38.59
		618	0.7	0.9	0.4	1.2	0.4	52.60
		617	0.4	1.0	0.3	1.1	0.3	66.33

		NODE	Vxx	Vyy
		Cent	2.0	1.3
		609	3.0	2.5
		610	3.0	0.4
		618	1.1	0.4
		617	1.1	2.5

LC		NODE	Fxx	Fyy	Fxy	Fmax	Fmin	ANGLE
RC ENV~1	Max	Cent	0.9	1.5	1.5	2.4	0.5	59.32
		609	1.5	2.2	1.5	3.0	0.8	63.31
		610	1.5	1.9	1.5	2.7	0.8	-73.27
		618	0.4	1.9	1.5	3.2	0.1	-63.49
		617	0.4	2.2	1.5	2.9	0.1	64.21
	Min	Cent	-4.0	-0.5	-3.0	0.7	-5.2	-79.26
		609	-6.1	-1.7	-3.0	0.2	-7.1	-67.28
		610	-6.1	0.3	-3.0	0.7	-6.9	-79.53
		618	-1.9	0.3	-3.0	0.7	-3.4	-80.01
		617	-1.9	-1.7	-3.0	0.6	-4.3	-78.97

		NODE	Mxx	Myy	Mxy	Mmax	Mmin	ANGLE
	Max	Cent	4.5	-1.0	-0.5	4.6	-1.0	-4.95
		609	10.1	4.1	-0.3	10.5	3.5	-23.27
		610	1.3	-0.4	-0.5	1.4	-0.5	-13.99
		618	1.5	-2.9	-0.4	1.5	-3.0	-5.49
		617	5.3	-2.8	-0.3	5.3	-3.0	-2.01
	Min	Cent	-5.6	-4.6	-3.8	-2.6	-7.7	-47.86
		609	-3.7	-2.7	-3.4	-1.2	-5.3	-52.53
		610	-8.2	-4.4	-3.9	-3.5	-9.8	-66.18
		618	-8.0	-6.2	-3.9	-4.6	-10.3	-57.39
		617	-3.0	-6.5	-3.4	-1.5	-7.7	-35.81

		NODE	Vxx	Vyy
	Max	Cent	16.7	12.8

		609	21.5	17.9	
		610	21.5	7.8	
		618	11.9	7.8	
		617	11.9	17.9	
	Min	Cent	7.1	2.0	
		609	7.4	2.1	
		610	7.4	1.9	
		618	6.3	1.9	
		617	6.3	2.1	

LC		NODE	Fxx	Fyy	Fxy	Fmax	Fmin	ANGLE
RC ENV~2	Max	Cent	0.3	0.8	0.2	1.5	0.2	-67.01
		609	0.6	0.7	0.2	0.8	0.4	-72.97
		610	0.6	1.4	0.2	1.9	0.4	-73.30
		618	0.1	1.4	0.2	2.3	0.0	-63.64
		617	0.1	0.7	0.2	1.3	0.0	-56.28
	Min	Cent	-2.8	0.4	-1.9	0.6	-3.7	-75.69
		609	-4.3	-0.2	-1.9	0.5	-5.0	-68.83
		610	-4.3	0.5	-1.9	0.6	-4.9	-77.34
		618	-1.4	0.5	-1.9	0.5	-2.4	72.20
		617	-1.4	-0.2	-1.9	0.5	-2.7	-73.58

		NODE	Mxx	Myy	Mxy	Mmax	Mmin	ANGLE
	Max	Cent	1.1	-1.7	-1.2	2.5	-2.8	-29.36
		609	6.6	2.8	-1.1	7.5	1.9	-22.47
		610	-2.5	-0.9	-1.2	0.7	-3.9	-53.38
		618	-2.1	-3.7	-1.2	-0.4	-4.7	-35.45
		617	2.5	-3.8	-1.2	3.1	-4.0	-14.88
	Min	Cent	-3.3	-3.3	-2.7	-1.8	-5.3	-45.08
		609	-0.5	-1.6	-2.4	0.6	-2.7	-35.30
		610	-5.9	-3.2	-2.7	-2.5	-7.0	-65.85
		618	-5.6	-4.6	-2.7	-3.4	-7.3	-55.22
		617	-1.3	-4.8	-2.4	-0.6	-5.6	-24.73

		NODE	Vxx	Vyy
	Max	Cent	12.3	9.3
		609	15.7	12.9
		610	15.7	5.6
		618	8.9	5.6
		617	8.9	12.9
	Min	Cent	8.3	3.4
		609	9.0	4.3
		610	9.0	2.5
		618	7.3	2.5
		617	7.3	4.3

ELEM	MAT	SEC	LC		NODE	Fxx	Fyy	Fxy	Fmax	Fmin	ANGLE
580	1	1	SX (RS)		Cent	1.8	0.4	0.7	2.0	0.1	22.72
					610	2.2	0.5	0.7	2.4	0.3	20.09
					611	2.2	0.3	0.7	2.4	0.0	18.03
					619	1.3	0.3	0.7	1.7	-0.1	25.97
					618	1.3	0.5	0.7	1.7	0.1	29.65

		NODE	Mxx	Myy	Mxy	Mmax	Mmin	ANGLE
		Cent	3.9	1.1	0.8	4.1	0.9	15.15
		610	4.6	1.6	0.8	4.8	1.4	14.13
		611	3.3	1.3	0.8	3.5	1.1	19.00
		619	3.4	0.9	0.8	3.6	0.7	15.92
		618	4.3	0.8	0.8	4.4	0.6	12.86

		NODE	Vxx	Vyy
		Cent	2.0	1.3
		610	2.4	1.6
		611	2.4	1.0
		619	1.6	1.0
		618	1.6	1.6

LC		NODE	Fxx	Fyy	Fxy	Fmax	Fmin	ANGLE
SY (RS)		Cent	0.7	0.1	1.6	2.0	-1.3	39.45

		610	0.8	0.1	1.6	2.1	-1.2	38.99
		611	0.8	0.2	1.6	2.1	-1.1	39.85
		619	0.7	0.2	1.6	2.1	-1.2	41.11
		618	0.7	0.1	1.6	2.0	-1.3	40.24

		NODE	Mxx	Myy	Mxy	Mmax	Mmin	ANGLE
		Cent	0.6	1.0	0.5	1.4	0.2	54.57
		610	0.7	0.8	0.6	1.3	0.2	46.87
		611	0.6	1.0	0.6	1.4	0.2	55.63
		619	0.7	1.2	0.5	1.5	0.4	58.40
		618	0.5	0.9	0.5	1.2	0.2	57.20

		NODE	Vxx	Vyy
		Cent	0.4	0.3
		610	0.5	0.4
		611	0.5	0.3
		619	0.6	0.3
		618	0.6	0.4

LC		NODE	Fxx	Fyy	Fxy	Fmax	Fmin	ANGLE
RC ENV~1	Max	Cent	0.8	1.8	1.2	2.2	0.7	-75.62
		610	1.0	2.0	1.2	2.3	0.9	-77.42
		611	1.0	1.7	1.2	2.1	0.7	-76.98
		619	0.6	1.7	1.2	2.2	0.5	-73.28
		618	0.6	2.0	1.2	2.4	0.5	-73.97
	Min	Cent	-3.6	0.4	-2.1	0.6	-4.0	67.81
		610	-4.4	0.2	-2.1	0.6	-4.8	-73.66
		611	-4.4	0.5	-2.1	0.7	-4.8	58.43
		619	-2.8	0.5	-2.1	0.7	-3.3	81.00
		618	-2.8	0.2	-2.1	0.6	-3.2	73.48

		NODE	Mxx	Myy	Mxy	Mmax	Mmin	ANGLE
	Max	Cent	-0.8	-2.2	-0.2	-0.8	-2.3	-9.30
		610	1.6	-0.4	-0.3	1.7	-0.4	-7.09
		611	-3.3	-1.9	-0.1	-1.9	-3.3	-84.89
		619	-2.8	-3.2	-0.2	-2.8	-3.6	-14.18
		618	1.1	-2.9	-0.3	1.2	-3.1	-4.45
	Min	Cent	-10.3	-5.8	-3.7	-4.9	-11.7	-68.34
		610	-7.8	-4.4	-3.7	-3.5	-9.4	-66.21
		611	-12.7	-5.5	-3.5	-5.0	-13.6	-74.50
		619	-12.6	-7.0	-3.6	-6.1	-13.8	-70.52
		618	-8.2	-6.3	-3.8	-4.8	-10.4	-58.29

		NODE	Vxx	Vyy
	Max	Cent	10.6	6.4
		610	11.5	7.8
		611	11.5	5.1
		619	9.7	5.1
		618	9.7	7.8
	Min	Cent	3.7	1.7
		610	3.6	1.9
		611	3.6	1.5
		619	3.7	1.5
		618	3.7	1.9

LC		NODE	Fxx	Fyy	Fxy	Fmax	Fmin	ANGLE
RC ENV~2	Max	Cent	0.2	1.3	-0.0	1.6	0.2	-75.64
		610	0.3	1.4	-0.0	1.6	0.3	-77.43
		611	0.3	1.2	-0.0	1.5	0.3	-76.99
		619	0.2	1.2	-0.0	1.6	0.2	-73.34
		618	0.2	1.4	-0.0	1.7	0.2	-74.02
	Min	Cent	-2.5	0.5	-1.1	0.5	-2.8	-84.46
		610	-3.1	0.5	-1.1	0.5	-3.4	-81.78
		611	-3.1	0.6	-1.1	0.6	-3.4	-84.29
		619	-2.0	0.6	-1.1	0.6	-2.3	-85.83
		618	-2.0	0.5	-1.1	0.5	-2.3	-84.62

		NODE	Mxx	Myy	Mxy	Mmax	Mmin	ANGLE
	Max	Cent	-4.4	-2.9	-1.0	-1.4	-5.1	-55.23
		610	-2.1	-0.9	-1.0	0.7	-3.4	-52.01

611	-6.4	-2.5	-0.8	-1.8	-6.6	-69.05
619	-6.0	-4.3	-0.9	-3.1	-6.5	-59.25
618	-2.5	-3.7	-1.1	-0.8	-4.6	-36.87
Min Cent	-7.4	-4.2	-2.5	-3.7	-8.4	-68.17
610	-5.5	-3.1	-2.6	-2.5	-6.6	-65.89
611	-9.2	-4.1	-2.4	-3.8	-9.9	-75.15
619	-9.1	-5.2	-2.4	-4.6	-9.9	-70.53
618	-5.8	-4.6	-2.6	-3.5	-7.4	-56.27

	NODE	Vxx	Vyy
Max	Cent	7.8	4.7
	610	8.4	5.6
	611	8.4	3.7
	619	7.2	3.7
	618	7.2	5.6
Min	Cent	4.8	2.2
	610	4.9	2.5
	611	4.9	2.0
	619	4.7	2.0
	618	4.7	2.5

ELEM	MAT	SEC	LC		NODE	Fxx	Fyy	Fxy	Fmax	Fmin	ANGLE
581	1	1	SX	(RS)	Cent	1.5	0.2	0.5	1.7	0.0	20.62
					611	1.7	0.3	0.5	1.9	0.1	18.90
					612	1.7	0.2	0.5	1.9	0.0	17.63
					620	1.2	0.2	0.5	1.5	-0.0	22.73
					619	1.2	0.3	0.5	1.5	0.1	24.67

	NODE	Mxx	Myy	Mxy	Mmax	Mmin	ANGLE
	Cent	2.9	1.0	0.7	3.1	0.7	17.73
	611	3.4	1.4	0.7	3.6	1.2	16.35
	612	2.4	1.0	0.6	2.6	0.8	20.60
	620	2.5	0.7	0.7	2.7	0.5	19.31
	619	3.3	0.9	0.7	3.5	0.7	15.48

	NODE	Vxx	Vyy
	Cent	1.9	0.8
	611	2.0	1.0
	612	2.0	0.7
	620	1.8	0.7
	619	1.8	1.0

LC		NODE	Fxx	Fyy	Fxy	Fmax	Fmin	ANGLE
SY	(RS)	Cent	0.6	0.3	1.5	1.9	-1.0	41.54
		611	0.7	0.2	1.5	1.9	-1.1	40.61
		612	0.7	0.3	1.5	2.0	-1.0	41.85
		620	0.6	0.3	1.5	1.9	-1.0	42.63
		619	0.6	0.2	1.5	1.9	-1.1	41.38

	NODE	Mxx	Myy	Mxy	Mmax	Mmin	ANGLE
	Cent	0.5	1.2	0.5	1.5	0.2	60.69
	611	0.4	1.0	0.5	1.3	0.1	58.94
	612	0.5	1.2	0.5	1.5	0.2	60.89
	620	0.6	1.3	0.5	1.6	0.3	61.44
	619	0.6	1.2	0.5	1.5	0.3	61.06

	NODE	Vxx	Vyy
	Cent	0.2	0.3
	611	0.3	0.3
	612	0.3	0.2
	620	0.2	0.2
	619	0.2	0.3

LC		NODE	Fxx	Fyy	Fxy	Fmax	Fmin	ANGLE
RC ENV~1	Max	Cent	0.6	1.8	1.2	2.0	0.5	-79.21
		611	0.7	1.8	1.2	2.0	0.6	-80.14
		612	0.7	1.8	1.2	1.9	0.6	-80.02
		620	0.5	1.8	1.2	2.0	0.4	-78.11

		619	0.5	1.8	1.2	2.0	0.4	-78.27
	Min	Cent	-3.0	0.5	-1.8	0.7	-3.2	-80.50
		611	-3.5	0.4	-1.8	0.6	-3.6	-75.61
		612	-3.5	0.4	-1.8	0.7	-3.6	-81.56
		620	-2.6	0.4	-1.8	0.7	-2.8	-81.20
		619	-2.6	0.4	-1.8	0.7	-2.8	-79.14

		NODE	Mxx	Myy	Mxy	Mmax	Mmin	ANGLE
	Max	Cent	-4.1	-2.9	0.0	-2.9	-4.1	-88.07
		611	-2.9	-1.8	-0.0	-1.8	-2.9	-87.41
		612	-5.5	-2.6	0.1	-2.6	-5.5	89.78
		620	-5.2	-3.5	0.1	-3.5	-5.2	-88.90
		619	-2.9	-3.2	-0.0	-2.9	-3.6	-2.63
	Min	Cent	-13.5	-6.4	-3.3	-5.8	-14.4	-74.77
		611	-12.5	-5.5	-3.4	-5.0	-13.5	-74.43
		612	-14.4	-5.7	-3.3	-5.3	-15.1	-77.19
		620	-14.4	-7.2	-3.3	-6.6	-15.2	-75.04
		619	-12.7	-7.0	-3.4	-6.2	-13.8	-71.58

		NODE	Vxx	Vyy
	Max	Cent	5.0	4.7
		611	5.2	5.1
		612	5.2	4.2
		620	4.8	4.2
		619	4.8	5.1
	Min	Cent	0.7	1.5
		611	0.7	1.5
		612	0.7	1.5
		620	0.7	1.5
		619	0.7	1.5

LC		NODE	Fxx	Fyy	Fxy	Fmax	Fmin	ANGLE
RC ENV~2	Max	Cent	0.1	1.3	-0.1	1.4	0.1	-79.22
		611	0.1	1.3	-0.1	1.4	0.0	-80.13
		612	0.1	1.3	-0.1	1.4	0.0	-80.02
		620	0.1	1.3	-0.1	1.4	0.1	-78.13
		619	0.1	1.3	-0.1	1.5	0.1	-78.29
	Min	Cent	-2.1	0.6	-0.7	0.6	-2.2	-79.97
		611	-2.4	0.5	-0.7	0.5	-2.6	-79.89
		612	-2.4	0.6	-0.7	0.6	-2.6	-80.90
		620	-1.8	0.6	-0.7	0.6	-1.9	-80.04
		619	-1.8	0.5	-0.7	0.6	-1.9	-78.83

		NODE	Mxx	Myy	Mxy	Mmax	Mmin	ANGLE
	Max	Cent	-6.9	-3.6	-0.6	-3.1	-7.0	-70.14
		611	-6.1	-2.4	-0.6	-1.9	-6.3	-69.96
		612	-7.8	-3.1	-0.4	-2.9	-7.9	-78.86
		620	-7.6	-4.6	-0.5	-4.1	-7.7	-70.77
		619	-6.0	-4.3	-0.7	-3.3	-6.3	-58.66
	Min	Cent	-9.8	-4.7	-2.2	-4.4	-10.4	-75.63
		611	-9.1	-4.1	-2.3	-3.7	-9.7	-75.29
		612	-10.5	-4.3	-2.2	-4.0	-11.0	-78.35
		620	-10.5	-5.4	-2.2	-5.0	-11.0	-75.94
		619	-9.2	-5.2	-2.3	-4.7	-9.9	-71.90

		NODE	Vxx	Vyy
	Max	Cent	3.7	3.4
		611	3.8	3.7
		612	3.8	3.1
		620	3.5	3.1
		619	3.5	3.7
	Min	Cent	1.9	2.0
		611	1.9	2.0
		612	1.9	2.0
		620	1.9	2.0
		619	1.9	2.0

ELEM	MAT	SEC	LC		NODE	Fxx	Fyy	Fxy	Fmax	Fmin	ANGLE
582	1	1	SX (RS)		Cent	1.3	0.2	0.5	1.5	0.0	20.06
					612	1.5	0.2	0.5	1.7	0.1	18.21
					613	1.5	0.1	0.5	1.7	-0.0	17.16

621	1.1	0.1	0.5	1.3	-0.1	22.25
620	1.1	0.2	0.5	1.3	0.0	23.87

NODE	Mxx	Myy	Mxy	Mmax	Mmin	ANGLE
Cent	2.1	0.8	0.6	2.4	0.6	21.79
612	2.5	1.0	0.6	2.7	0.8	19.08
613	2.0	1.1	0.6	2.3	0.8	26.42
621	1.9	0.6	0.6	2.1	0.3	22.73
620	2.4	0.7	0.7	2.7	0.5	18.74

NODE	Vxx	Vyy
Cent	2.0	0.9
612	2.1	0.7
613	2.1	1.2
621	1.9	1.2
620	1.9	0.7

LC		NODE	Fxx	Fyy	Fxy	Fmax	Fmin	ANGLE
SY (RS)		Cent	0.6	0.4	1.4	1.9	-0.9	42.54
		612	0.6	0.3	1.4	1.9	-0.9	41.89
		613	0.6	0.4	1.4	1.9	-0.9	42.79
		621	0.6	0.4	1.4	1.9	-0.9	43.14
		620	0.6	0.3	1.4	1.9	-0.9	42.25

NODE	Mxx	Myy	Mxy	Mmax	Mmin	ANGLE
Cent	0.5	1.1	0.6	1.4	0.2	59.57
612	0.5	1.2	0.6	1.5	0.1	60.27
613	0.4	1.0	0.6	1.3	-0.0	57.39
621	0.6	1.1	0.5	1.4	0.2	58.55
620	0.6	1.3	0.5	1.6	0.4	62.29

NODE	Vxx	Vyy
Cent	0.1	0.2
612	0.1	0.2
613	0.1	0.2
621	0.1	0.2
620	0.1	0.2

LC		NODE	Fxx	Fyy	Fxy	Fmax	Fmin	ANGLE
RC ENV~1	Max	Cent	0.6	1.8	1.2	1.9	0.4	-82.06
		612	0.7	1.8	1.2	1.9	0.5	-82.59
		613	0.7	1.8	1.2	1.9	0.5	-82.53
		621	0.4	1.8	1.2	1.9	0.3	-81.44
		620	0.4	1.8	1.2	1.9	0.3	-81.52
	Min	Cent	-2.6	0.4	-1.6	0.7	-2.7	-76.21
		612	-2.9	0.4	-1.6	0.7	-3.0	-77.31
		613	-2.9	0.3	-1.6	0.8	-3.0	-77.69
		621	-2.3	0.3	-1.6	0.8	-2.4	-74.92
		620	-2.3	0.4	-1.6	0.7	-2.4	-74.35

	NODE	Mxx	Myy	Mxy	Mmax	Mmin	ANGLE
Max	Cent	-5.6	-3.1	0.4	-3.0	-5.7	85.74
	612	-5.4	-2.6	0.2	-2.6	-5.4	87.64
	613	-5.8	-2.4	0.5	-2.3	-5.9	83.32
	621	-5.7	-3.6	0.5	-3.6	-5.9	83.11
	620	-5.2	-3.5	0.3	-3.5	-5.3	87.23
Min	Cent	-14.1	-6.1	-3.1	-5.7	-14.7	-77.62
	612	-14.7	-5.8	-3.2	-5.4	-15.4	-77.78
	613	-13.5	-4.9	-3.1	-4.6	-14.0	-78.56
	621	-13.5	-6.7	-2.9	-6.3	-14.1	-77.03
	620	-14.6	-7.2	-3.1	-6.7	-15.2	-76.62

	NODE	Vxx	Vyy
Max	Cent	1.9	4.5
	612	2.0	4.2
	613	2.0	4.8
	621	1.9	4.8
	620	1.9	4.2
Min	Cent	-2.1	1.4

	612	-2.3	1.5	
	613	-2.3	1.3	
	621	-2.0	1.3	
	620	-2.0	1.5	

LC		NODE	Fxx	Fyy	Fxy	Fmax	Fmin	ANGLE
RC ENV~2	Max	Cent	-0.1	1.3	-0.1	1.4	-0.1	-82.08
		612	-0.1	1.3	-0.1	1.4	-0.1	-82.61
		613	-0.1	1.3	-0.1	1.4	-0.1	-82.55
		621	0.0	1.3	-0.1	1.4	-0.0	-81.47
		620	0.0	1.3	-0.1	1.4	-0.0	-81.54
	Min	Cent	-1.8	0.6	-0.4	0.6	-1.9	-83.82
		612	-2.1	0.6	-0.4	0.6	-2.1	-84.09
		613	-2.1	0.6	-0.4	0.6	-2.1	-84.60
		621	-1.6	0.6	-0.4	0.6	-1.7	-83.53
		620	-1.6	0.6	-0.4	0.6	-1.7	-82.78

		NODE	Mxx	Myy	Mxy	Mmax	Mmin	ANGLE
	Max	Cent	-7.7	-3.7	-0.1	-3.5	-7.7	-80.87
		612	-7.8	-3.1	-0.3	-2.9	-7.9	-80.42
		613	-7.8	-2.6	-0.0	-2.5	-7.8	-82.85
		621	-7.6	-4.4	0.0	-4.2	-7.6	-73.27
		620	-7.5	-4.7	-0.2	-4.3	-7.6	-70.37
	Min	Cent	-10.3	-4.6	-2.0	-4.4	-10.7	-79.14
		612	-10.7	-4.3	-2.1	-4.1	-11.1	-79.11
		613	-9.9	-3.7	-2.0	-3.5	-10.2	-80.25
		621	-9.9	-5.1	-1.9	-4.9	-10.2	-78.81
		620	-10.6	-5.4	-2.0	-5.1	-11.0	-77.88

		NODE	Vxx	Vyy
	Max	Cent	0.3	3.3
		612	0.4	3.1
		613	0.4	3.5
		621	0.3	3.5
		620	0.3	3.1
	Min	Cent	-1.3	2.3
		612	-1.4	2.0
		613	-1.4	2.5
		621	-1.2	2.5
		620	-1.2	2.0

ELEM	MAT	SEC	LC		NODE	Fxx	Fyy	Fxy	Fmax	Fmin	ANGLE
583	1	1	SX (RS)		Cent	1.3	0.1	0.4	1.5	0.0	17.69
					613	1.7	0.2	0.4	1.8	0.1	14.68
					614	1.7	0.1	0.4	1.8	0.0	14.23
					622	1.0	0.1	0.4	1.2	-0.0	22.39
					621	1.0	0.2	0.4	1.2	0.0	23.36

		NODE	Mxx	Myy	Mxy	Mmax	Mmin	ANGLE
		Cent	2.0	0.8	0.6	2.3	0.5	22.68
		613	2.0	1.1	0.7	2.3	0.7	28.70
		614	2.6	1.3	0.7	2.9	1.0	21.94
		622	2.1	0.4	0.6	2.3	0.2	17.29
		621	1.9	0.6	0.6	2.2	0.4	21.21

		NODE	Vxx	Vyy
		Cent	2.5	1.7
		613	2.9	1.2
		614	2.9	2.1
		622	2.1	2.1
		621	2.1	1.2

LC		NODE	Fxx	Fyy	Fxy	Fmax	Fmin	ANGLE
SY (RS)		Cent	0.7	0.5	1.4	2.0	-0.8	43.09
		613	0.7	0.4	1.4	2.0	-0.9	42.68
		614	0.7	0.7	1.4	2.1	-0.7	45.14
		622	0.8	0.7	1.4	2.1	-0.7	43.68
		621	0.8	0.4	1.4	2.0	-0.8	41.24

	NODE	Mxx	Myy	Mxy	Mmax	Mmin	ANGLE
	Cent	0.5	0.8	0.6	1.2	0.1	51.65
	613	0.6	1.0	0.7	1.5	0.0	53.22
	614	0.6	0.7	0.6	1.3	0.0	45.19
	622	0.5	0.7	0.4	1.0	0.2	55.05
	621	0.7	1.1	0.5	1.5	0.4	56.24

	NODE	Vxx	Vyy
	Cent	0.3	0.3
	613	0.4	0.2
	614	0.4	0.6
	622	0.9	0.6
	621	0.9	0.2

LC		NODE	Fxx	Fyy	Fxy	Fmax	Fmin	ANGLE
RC ENV~1	Max	Cent	0.6	1.9	1.3	2.1	0.4	58.55
		613	0.9	1.9	1.3	1.9	0.6	58.89
		614	0.9	1.9	1.3	2.1	0.6	61.09
		622	0.3	1.9	1.3	2.2	0.2	58.37
		621	0.3	1.9	1.3	2.0	0.2	55.94
	Min	Cent	-2.3	0.2	-1.5	0.7	-2.4	-78.76
		613	-2.5	0.3	-1.5	0.7	-2.6	-80.07
		614	-2.5	0.1	-1.5	0.7	-2.6	-80.29
		622	-2.1	0.1	-1.5	0.8	-2.4	-76.96
		621	-2.1	0.3	-1.5	0.7	-2.3	-76.57

	NODE	Mxx	Myy	Mxy	Mmax	Mmin	ANGLE
Max	Cent	-5.0	-2.9	0.9	-2.6	-5.3	68.36
	613	-6.2	-2.4	0.8	-2.3	-6.3	79.68
	614	-3.6	-0.7	1.0	-0.6	-3.9	-86.20
	622	-4.0	-3.6	1.1	-2.9	-5.1	45.10
	621	-5.7	-3.6	0.8	-3.5	-6.0	78.53
Min	Cent	-11.8	-5.1	-2.7	-4.9	-12.6	-79.89
	613	-14.3	-5.0	-3.0	-4.8	-14.8	-80.32
	614	-10.1	-3.6	-2.8	-3.6	-11.0	-86.38
	622	-10.2	-5.7	-2.4	-5.5	-11.1	-77.55
	621	-13.7	-6.7	-2.6	-6.4	-14.2	-79.74

	NODE	Vxx	Vyy
Max	Cent	-0.3	6.3
	613	-0.2	4.8
	614	-0.2	7.9
	622	-0.5	7.9
	621	-0.5	4.8
Min	Cent	-7.7	1.5
	613	-8.3	1.3
	614	-8.3	1.8
	622	-7.1	1.8
	621	-7.1	1.3

LC		NODE	Fxx	Fyy	Fxy	Fmax	Fmin	ANGLE
RC ENV~2	Max	Cent	-0.2	1.3	-0.0	1.4	-0.2	-84.23
		613	-0.3	1.3	-0.0	1.4	-0.3	-84.51
		614	-0.3	1.3	-0.0	1.4	-0.3	-84.51
		622	-0.1	1.3	-0.0	1.4	-0.1	-83.93
		621	-0.1	1.3	-0.0	1.4	-0.1	-83.93
	Min	Cent	-1.6	0.6	-0.3	0.6	-1.7	-89.44
		613	-1.8	0.6	-0.3	0.6	-1.8	-89.48
		614	-1.8	0.7	-0.3	0.7	-1.8	-89.52
		622	-1.5	0.7	-0.3	0.7	-1.5	-89.39
		621	-1.5	0.6	-0.3	0.6	-1.5	-89.32

	NODE	Mxx	Myy	Mxy	Mmax	Mmin	ANGLE
Max	Cent	-7.0	-2.9	0.5	-2.9	-7.0	-87.48
	613	-8.1	-2.7	0.2	-2.7	-8.1	-85.24
	614	-6.1	-0.8	0.5	-0.8	-6.1	-87.98
	622	-6.0	-3.7	0.7	-3.6	-6.2	-74.23
	621	-7.6	-4.4	0.4	-4.4	-7.6	-76.24
Min	Cent	-8.7	-3.9	-1.6	-3.8	-9.2	-82.50
	613	-10.5	-3.8	-1.9	-3.7	-10.8	-82.17

614	-7.5	-2.4	-1.7	-2.3	-8.0	84.53
622	-7.5	-4.4	-1.4	-4.4	-8.0	-81.88
621	-10.0	-5.1	-1.6	-5.0	-10.3	-82.06

	NODE	Vxx	Vyy
Max	Cent	-2.7	4.6
	613	-3.0	3.5
	614	-3.0	5.8
	622	-2.5	5.8
	621	-2.5	3.5
Min	Cent	-5.4	3.2
	613	-5.9	2.5
	614	-5.9	3.8
	622	-5.0	3.8
	621	-5.0	2.5

ELEM	MAT	SEC	LC		NODE	Fxx	Fyy	Fxy	Fmax	Fmin	ANGLE
584	1	1	SX	(RS)	Cent	1.3	0.5	0.7	1.7	0.1	29.43
					614	2.3	0.2	0.7	2.5	-0.0	16.44
					615	2.3	1.0	0.7	2.6	0.7	23.16
					623	0.4	1.0	0.7	1.4	-0.0	55.93
					622	0.4	0.2	0.7	1.0	-0.4	39.60

	NODE	Mxx	Myy	Mxy	Mmax	Mmin	ANGLE
	Cent	3.1	0.8	0.4	3.1	0.8	9.35
	614	2.8	1.3	0.5	2.9	1.1	16.42
	615	5.5	3.1	0.5	5.6	3.0	10.79
	623	1.8	1.3	0.5	2.1	1.0	30.68
	622	2.4	0.4	0.5	2.5	0.3	13.66

	NODE	Vxx	Vyy
	Cent	2.3	4.5
	614	4.7	2.1
	615	4.7	6.9
	623	1.1	6.9
	622	1.1	2.1

LC		NODE	Fxx	Fyy	Fxy	Fmax	Fmin	ANGLE
SY	(RS)	Cent	1.0	0.9	2.1	3.0	-1.2	44.57
		614	1.7	0.6	2.1	3.3	-1.0	38.17
		615	1.7	2.0	2.1	3.9	-0.3	47.64
		623	0.3	2.0	2.1	3.4	-1.1	56.09
		622	0.3	0.6	2.1	2.6	-1.6	47.07

	NODE	Mxx	Myy	Mxy	Mmax	Mmin	ANGLE
	Cent	0.5	1.0	0.2	1.1	0.5	70.85
	614	1.3	0.7	0.5	1.6	0.4	30.94
	615	2.3	3.0	0.5	3.3	2.0	61.91
	623	1.0	1.0	0.1	1.2	0.9	49.52
	622	0.5	0.7	0.2	0.8	0.4	58.88

	NODE	Vxx	Vyy
	Cent	3.5	1.6
	614	5.1	0.6
	615	5.1	3.7
	623	1.9	3.7
	622	1.9	0.6

LC		NODE	Fxx	Fyy	Fxy	Fmax	Fmin	ANGLE
RC ENV~1	Max	Cent	0.6	2.0	2.0	3.1	0.2	54.95
		614	1.5	1.9	2.0	3.2	0.6	48.80
		615	1.5	2.9	2.0	4.1	1.0	58.22
		623	-0.1	2.9	2.0	3.8	-0.1	64.21
		622	-0.1	1.9	2.0	2.7	-0.1	56.62
	Min	Cent	-2.1	-0.1	-2.2	0.6	-3.2	-73.29
		614	-3.1	0.1	-2.2	0.8	-3.7	-78.61
		615	-3.1	-1.2	-2.2	0.0	-4.1	-76.05
		623	-2.1	-1.2	-2.2	0.3	-3.3	-60.36

		622	-2.1	0.1	-2.2	0.8	-2.7	80.10

	NODE	Mxx	Myy	Mxy	Mmax	Mmin	ANGLE
Max	Cent	-1.5	-1.9	1.3	-0.5	-3.2	37.98
	614	-4.1	-1.0	1.3	-0.7	-4.6	69.48
	615	3.4	3.6	1.5	4.5	1.5	37.60
	623	-1.6	-3.5	1.5	-0.8	-4.3	29.20
	622	-3.5	-3.6	1.3	-2.4	-5.0	40.33
Min	Cent	-7.6	-4.0	-2.0	-3.7	-8.1	81.66
	614	-11.2	-3.8	-2.3	-3.7	-11.8	87.15
	615	-7.6	-3.6	-2.0	-3.5	-7.6	82.98
	623	-5.2	-6.0	-1.9	-4.9	-6.8	26.64
	622	-10.2	-5.7	-2.1	-5.6	-11.0	-81.19

	NODE	Vxx	Vyy
Max	Cent	-2.7	12.2
	614	-2.7	7.9
	615	-2.7	16.6
	623	-2.7	16.6
	622	-2.7	7.9
Min	Cent	-14.9	1.3
	614	-18.7	1.8
	615	-18.7	0.7
	623	-11.1	0.7
	622	-11.1	1.8

LC		NODE	Fxx	Fyy	Fxy	Fmax	Fmin	ANGLE
RC ENV~2	Max	Cent	-0.4	1.5	0.1	1.5	-0.4	-84.80
		614	-0.6	1.4	0.1	1.4	-0.6	-84.68
		615	-0.6	1.6	0.1	1.6	-0.6	-85.02
		623	-0.2	1.6	0.1	1.6	-0.2	-84.92
		622	-0.2	1.4	0.1	1.4	-0.2	-84.56
	Min	Cent	-1.5	0.6	-0.3	0.6	-1.5	84.18
		614	-1.5	0.6	-0.3	0.7	-1.6	85.25
		615	-1.5	0.6	-0.3	0.6	-1.6	85.04
		623	-1.5	0.6	-0.3	0.6	-1.5	82.50
		622	-1.5	0.6	-0.3	0.7	-1.5	82.97

	NODE	Mxx	Myy	Mxy	Mmax	Mmin	ANGLE
Max	Cent	-3.6	-1.7	1.2	-1.4	-3.9	68.69
	614	-6.8	-1.0	1.0	-0.9	-7.0	85.89
	615	0.7	2.3	1.2	2.6	0.4	66.79
	623	-1.8	-3.9	1.2	-1.5	-4.1	15.74
	622	-5.7	-3.6	1.0	-3.5	-6.2	79.79
Min	Cent	-5.4	-3.0	-1.1	-2.8	-5.8	-87.75
	614	-8.3	-2.5	-1.3	-2.4	-8.6	-87.50
	615	-2.7	-0.5	-1.1	-0.3	-2.8	-84.54
	623	-3.6	-4.8	-1.0	-3.5	-5.4	-16.77
	622	-7.5	-4.4	-1.2	-4.4	-7.9	-86.87

	NODE	Vxx	Vyy
Max	Cent	-6.1	8.9
	614	-7.7	5.8
	615	-7.7	12.1
	623	-4.6	12.1
	622	-4.6	5.8
Min	Cent	-10.6	5.3
	614	-13.3	3.8
	615	-13.3	6.9
	623	-7.9	6.9
	622	-7.9	3.8

ELEM	MAT	SEC	LC		NODE	Fxx	Fyy	Fxy	Fmax	Fmin	ANGLE
585	1	1	SX (RS)		Cent	0.3	0.3	0.4	0.7	-0.1	45.02
					615	1.0	0.7	0.4	1.3	0.4	34.28
					616	1.0	0.1	0.4	1.2	-0.1	21.07
					624	0.5	0.1	0.4	0.7	-0.2	32.66
					623	0.5	0.7	0.4	1.0	0.1	52.11

	NODE	Mxx	Myy	Mxy	Mmax	Mmin	ANGLE

Cent	0.3	0.2	1.4	1.6	-1.1	43.71
615	6.2	3.2	1.7	7.0	2.4	24.66
616	9.1	1.8	0.4	9.1	1.8	3.25
624	2.0	0.4	0.5	2.1	0.3	15.95
623	1.6	1.3	1.8	3.3	-0.4	42.88

NODE	Vxx	Vyy
Cent	12.7	3.4
615	25.6	6.9
616	25.6	0.0
624	0.9	0.0
623	0.9	6.9

LC		NODE	Fxx	Fyy	Fxy	Fmax	Fmin	ANGLE
SY (RS)		Cent	0.5	2.9	1.3	3.5	-0.1	66.30
		615	1.0	1.8	1.3	2.8	-0.0	53.02
		616	1.0	4.1	1.3	4.6	0.5	69.84
		624	0.2	4.1	1.3	4.5	-0.2	72.91
		623	0.2	1.8	1.3	2.5	-0.5	60.10

	NODE	Mxx	Myy	Mxy	Mmax	Mmin	ANGLE
	Cent	1.8	2.1	0.5	2.5	1.4	52.88
	615	1.4	2.3	0.2	2.3	1.3	75.50
	616	5.2	5.4	0.4	5.7	4.9	49.67
	624	1.8	0.8	0.5	2.0	0.6	23.45
	623	1.5	1.1	0.3	1.7	0.9	28.80

NODE	Vxx	Vyy
Cent	5.8	6.8
615	10.7	3.7
616	10.7	9.8
624	0.9	9.8
623	0.9	3.7

LC		NODE	Fxx	Fyy	Fxy	Fmax	Fmin	ANGLE
RC ENV~1	Max	Cent	-0.2	3.8	1.3	4.2	-0.3	73.62
		615	0.2	2.6	1.3	3.2	0.1	66.32
		616	0.2	5.0	1.3	5.3	0.1	75.84
		624	-0.2	5.0	1.3	5.3	-0.3	77.30
		623	-0.2	2.6	1.3	3.1	-0.3	69.76
	Min	Cent	-2.2	-2.1	-1.4	-0.2	-3.1	-36.20
		615	-2.5	-0.9	-1.4	0.1	-2.8	-53.69
		616	-2.5	-3.2	-1.4	-1.0	-4.1	-30.90
		624	-1.9	-3.2	-1.4	-0.3	-3.9	-24.47
		623	-1.9	-0.9	-1.4	0.3	-2.3	-71.82

	NODE	Mxx	Myy	Mxy	Mmax	Mmin	ANGLE
Max	Cent	4.2	-0.4	1.7	4.3	-0.8	-6.85
	615	4.8	3.9	2.6	6.6	3.2	34.78
	616	13.2	5.3	0.4	13.4	5.3	-9.69
	624	3.9	-4.0	0.3	4.7	-4.0	-20.63
	623	-1.8	-3.4	2.5	0.0	-4.0	35.86
Min	Cent	-2.7	-4.6	-3.1	-2.7	-4.6	-4.83
	615	-7.6	-3.6	-2.5	-3.4	-7.8	-78.04
	616	-6.7	-5.4	-3.7	-2.8	-6.7	-8.29
	624	-3.1	-5.9	-3.8	-2.9	-6.3	-16.48
	623	-4.9	-6.0	-2.7	-4.8	-7.8	16.70

NODE	Vxx	Vyy
Max Cent	7.3	16.1
615	18.8	16.6
616	18.8	17.6
624	-3.0	17.6
623	-3.0	16.6
Min Cent	-18.1	0.9
615	-32.3	0.7
616	-32.3	-2.1
624	-11.8	-2.1
623	-11.8	0.7

LC		NODE	Fxx	Fyy	Fxy	Fmax	Fmin	ANGLE
RC ENV~2	Max	Cent	-0.3	1.6	0.1	1.6	-0.3	-87.51
		615	-0.2	1.6	0.1	1.6	-0.2	-87.66
		616	-0.2	1.6	0.1	1.6	-0.2	-87.67
		624	-0.4	1.6	0.1	1.6	-0.4	-87.34
		623	-0.4	1.6	0.1	1.6	-0.4	-87.33
	Min	Cent	-1.6	0.7	-0.2	0.7	-1.6	86.17
		615	-1.8	0.6	-0.2	0.6	-1.8	85.37
		616	-1.8	0.8	-0.2	0.9	-1.8	86.37
		624	-1.4	0.8	-0.2	0.9	-1.4	86.74
		623	-1.4	0.6	-0.2	0.6	-1.4	85.95

	NODE	Mxx	Myy	Mxy	Mmax	Mmin	ANGLE
Max	Cent	2.6	-0.9	0.5	2.7	-0.9	-3.75
	615	2.0	2.5	1.1	2.7	1.8	61.86
	616	9.0	3.0	0.1	9.1	2.8	-8.13
	624	2.3	-3.4	-0.1	2.8	-4.4	-18.84
	623	-1.6	-3.9	0.8	-1.6	-4.1	0.70
Min	Cent	-0.9	-2.5	-1.9	-0.8	-2.9	11.52
	615	-2.1	-0.4	-1.4	-0.2	-2.3	-84.00
	616	1.7	-0.2	-2.3	2.0	-0.5	0.89
	624	-1.2	-4.9	-2.4	-1.2	-4.9	-3.24
	623	-3.6	-4.8	-1.6	-3.4	-5.6	2.00

	NODE	Vxx	Vyy
Max	Cent	-4.9	11.8
	615	-4.2	12.1
	616	-4.2	11.9
	624	-4.0	11.9
	623	-4.0	12.1
Min	Cent	-11.0	7.4
	615	-14.3	6.9
	616	-14.3	7.2
	624	-8.2	7.2
	623	-8.2	6.9

ELEM	MAT	SEC	LC		NODE	Fxx	Fyy	Fxy	Fmax	Fmin	ANGLE
586	1	1	SX (RS)		Cent	0.8	0.7	0.6	1.3	0.1	43.43
					180	1.2	0.9	0.6	1.7	0.4	38.81
					617	1.2	0.6	0.6	1.5	0.2	31.62
					625	0.4	0.6	0.6	1.1	-0.1	49.06
					183	0.4	0.9	0.6	1.3	-0.0	56.57

	NODE	Mxx	Myy	Mxy	Mmax	Mmin	ANGLE
	Cent	3.4	0.9	1.4	4.1	0.3	23.90
	180	4.0	1.4	1.7	4.9	0.6	25.79
	617	4.0	0.7	1.3	4.5	0.2	18.67
	625	3.3	0.5	1.2	3.8	0.1	20.60
	183	2.4	1.1	1.6	3.4	0.0	33.32

	NODE	Vxx	Vyy
	Cent	1.1	0.2
	180	0.2	0.3
	617	0.2	0.3
	625	2.0	0.3
	183	2.0	0.3

LC		NODE	Fxx	Fyy	Fxy	Fmax	Fmin	ANGLE
SY (RS)		Cent	0.4	1.3	1.3	2.2	-0.5	54.86
		180	0.7	1.5	1.3	2.4	-0.3	53.86
		617	0.7	1.1	1.3	2.2	-0.4	49.78
		625	0.1	1.1	1.3	2.0	-0.8	55.71
		183	0.1	1.5	1.3	2.3	-0.7	59.26

	NODE	Mxx	Myy	Mxy	Mmax	Mmin	ANGLE
	Cent	0.4	1.1	0.2	1.1	0.4	77.09
	180	0.9	0.7	0.1	1.0	0.7	25.43
	617	0.6	0.8	0.2	1.0	0.4	56.36

		625	0.2	1.6	0.2	1.6	0.2	80.29
		183	0.2	1.6	0.1	1.6	0.1	84.88

	NODE	Vxx	Vyy
	Cent	0.5	2.0
	180	0.6	2.1
	617	0.6	2.0
	625	0.5	2.0
	183	0.5	2.1

LC		NODE	Fxx	Fyy	Fxy	Fmax	Fmin	ANGLE
RC ENV~1	Max	Cent	0.3	1.9	0.8	2.2	0.3	69.68
		180	0.5	2.1	0.8	2.4	0.5	70.40
		617	0.5	1.7	0.8	2.0	0.5	67.05
		625	0.1	1.7	0.8	2.0	0.1	68.81
		183	0.1	2.1	0.8	2.4	0.1	71.77
	Min	Cent	-1.7	-0.7	-1.7	0.5	-2.5	-58.92
		180	-2.4	-0.9	-1.7	0.2	-2.9	-62.87
		617	-2.4	-0.5	-1.7	0.5	-2.9	-65.39
		625	-1.0	-0.5	-1.7	0.7	-2.2	88.80
		183	-1.0	-0.9	-1.7	0.4	-2.4	87.44

	NODE	Mxx	Myy	Mxy	Mmax	Mmin	ANGLE
Max	Cent	6.6	-2.1	0.9	6.7	-2.1	5.75
	180	11.6	-0.4	1.5	11.6	-0.6	-0.29
	617	5.2	-2.5	0.6	5.3	-2.5	4.64
	625	3.7	-2.9	0.5	3.7	-3.0	3.43
	183	7.2	-1.7	1.2	7.4	-1.7	7.32
Min	Cent	-0.3	-5.5	-2.1	0.5	-6.0	-22.50
	180	2.4	-3.7	-1.9	3.0	-4.1	-16.90
	617	-2.8	-5.4	-2.3	-1.4	-6.5	-37.20
	625	-3.0	-7.8	-2.4	-2.1	-8.1	-18.33
	183	2.4	-6.1	-1.9	2.9	-6.1	-14.61

	NODE	Vxx	Vyy
Max	Cent	12.6	4.9
	180	13.7	5.0
	617	13.7	4.8
	625	11.9	4.8
	183	11.9	5.0
Min	Cent	7.2	0.0
	180	8.3	0.0
	617	8.3	-0.0
	625	5.7	-0.0
	183	5.7	0.0

LC		NODE	Fxx	Fyy	Fxy	Fmax	Fmin	ANGLE
RC ENV~2	Max	Cent	0.1	1.0	-0.1	1.4	0.1	-68.50
		180	0.2	1.1	-0.1	1.4	0.2	-72.00
		617	0.2	0.9	-0.1	1.2	0.2	-70.82
		625	0.0	0.9	-0.1	1.3	0.0	-63.78
		183	0.0	1.1	-0.1	1.5	0.0	-65.70
	Min	Cent	-1.2	0.4	-1.0	0.5	-1.6	-82.15
		180	-1.7	0.3	-1.0	0.3	-2.0	-74.86
		617	-1.7	0.5	-1.0	0.6	-2.1	-82.82
		625	-0.7	0.5	-1.0	0.6	-1.2	-84.76
		183	-0.7	0.3	-1.0	0.3	-1.1	-81.34

	NODE	Mxx	Myy	Mxy	Mmax	Mmin	ANGLE
Max	Cent	4.5	-3.2	-0.4	4.5	-3.2	-4.12
	180	8.6	-1.7	0.1	8.6	-1.7	-0.14
	617	2.7	-3.2	-0.6	2.8	-3.3	-8.02
	625	1.1	-4.4	-0.7	1.3	-4.5	-9.32
	183	5.5	-3.3	-0.0	5.5	-3.3	-1.41
Min	Cent	1.1	-4.1	-1.4	1.4	-4.3	-12.78
	180	4.2	-2.7	-1.3	4.3	-2.9	-8.46
	617	-1.2	-4.0	-1.6	-0.7	-4.6	-22.30
	625	-1.8	-5.7	-1.6	-1.3	-6.0	-16.10
	183	3.3	-4.4	-1.3	3.5	-4.5	-8.16

NODE	Vxx	Vyy

Max	Cent	9.4	3.5
	180	10.3	3.6
	617	10.3	3.5
	625	8.9	3.5
	183	8.9	3.6
Min	Cent	8.2	1.6
	180	8.9	1.7
	617	8.9	1.4
	625	7.4	1.4
	183	7.4	1.7

ELEM	MAT	SEC	LC		NODE	Fxx	Fyy	Fxy	Fmax	Fmin	ANGLE
587	1	1	SX (RS)		Cent	0.8	0.5	0.7	1.3	-0.0	38.51
					617	0.9	0.6	0.7	1.4	0.1	37.81
					618	0.9	0.4	0.7	1.4	-0.1	34.56
					626	0.7	0.4	0.7	1.2	-0.1	39.49
					625	0.7	0.6	0.7	1.3	-0.0	43.01

	NODE	Mxx	Myy	Mxy	Mmax	Mmin	ANGLE
	Cent	4.0	0.6	1.0	4.3	0.3	15.11
	617	4.3	0.7	1.0	4.5	0.4	14.95
	618	4.5	1.0	0.9	4.7	0.8	13.55
	626	3.8	0.4	1.0	4.0	0.1	15.00
	625	3.6	0.6	1.1	4.0	0.2	18.09

	NODE	Vxx	Vyy
	Cent	0.4	0.8
	617	0.4	0.3
	618	0.4	1.2
	626	0.4	1.2
	625	0.4	0.3

LC		NODE	Fxx	Fyy	Fxy	Fmax	Fmin	ANGLE
SY (RS)		Cent	0.2	0.8	1.8	2.3	-1.3	49.47
		617	0.3	1.2	1.8	2.6	-1.1	51.62
		618	0.3	0.4	1.8	2.2	-1.4	46.01
		626	0.2	0.4	1.8	2.1	-1.5	46.88
		625	0.2	1.2	1.8	2.5	-1.2	52.44

	NODE	Mxx	Myy	Mxy	Mmax	Mmin	ANGLE
	Cent	0.4	1.2	0.3	1.3	0.3	68.96
	617	0.4	0.8	0.3	1.0	0.2	59.59
	618	0.7	0.9	0.4	1.2	0.4	52.79
	626	0.4	1.5	0.4	1.6	0.3	72.90
	625	0.2	1.6	0.3	1.6	0.2	76.87

	NODE	Vxx	Vyy
	Cent	0.8	1.6
	617	1.1	2.0
	618	1.1	1.2
	626	0.5	1.2
	625	0.5	2.0

LC		NODE	Fxx	Fyy	Fxy	Fmax	Fmin	ANGLE
RC ENV~1	Max	Cent	0.3	1.3	1.3	2.1	0.3	60.82
		617	0.4	1.7	1.3	2.3	0.3	63.55
		618	0.4	1.3	1.3	2.0	0.3	-50.88
		626	0.3	1.3	1.3	2.1	0.2	-49.33
		625	0.3	1.7	1.3	2.4	0.2	63.28
	Min	Cent	-1.7	-0.2	-2.3	0.8	-2.8	-59.77
		617	-1.9	-0.6	-2.3	0.6	-3.0	-60.81
		618	-1.9	0.1	-2.3	0.8	-2.7	-62.11
		626	-1.5	0.1	-2.3	0.8	-2.6	-80.42
		625	-1.5	-0.6	-2.3	0.7	-2.9	-78.35

		NODE	Mxx	Myy	Mxy	Mmax	Mmin	ANGLE
	Max	Cent	2.9	-3.0	-0.1	2.9	-3.2	-0.74

617	5.5	-2.4	-0.0	5.5	-2.5	-0.03
618	1.5	-3.0	-0.3	1.5	-3.0	-3.65
626	0.5	-3.4	-0.1	0.5	-3.9	-1.49
625	4.0	-2.9	0.2	4.0	-3.0	1.19
Min Cent	-5.3	-6.6	-3.1	-3.6	-8.7	-36.39
617	-3.0	-5.4	-3.0	-1.4	-6.8	-38.73
618	-8.0	-6.3	-3.4	-4.8	-10.2	-56.61
626	-8.3	-7.9	-3.2	-5.6	-10.7	-51.02
625	-3.2	-7.8	-2.7	-2.0	-8.4	-20.87

	NODE	Vxx	Vyy
Max	Cent	10.9	4.8
	617	11.9	4.8
	618	11.9	4.9
	626	10.0	4.9
	625	10.0	4.8
Min	Cent	6.0	0.3
	617	6.3	-0.0
	618	6.3	0.5
	626	5.8	0.5
	625	5.8	-0.0

LC		NODE	Fxx	Fyy	Fxy	Fmax	Fmin	ANGLE
RC ENV~2	Max	Cent	0.1	0.9	-0.1	1.3	0.1	-66.35
		617	0.1	0.9	-0.1	1.3	0.0	-67.72
		618	0.1	0.9	-0.1	1.2	0.0	-67.28
		626	0.1	0.9	-0.1	1.3	0.1	-64.85
		625	0.1	0.9	-0.1	1.3	0.1	-65.37
	Min	Cent	-1.2	0.5	-1.1	0.6	-1.7	-76.04
		617	-1.4	0.5	-1.1	0.6	-1.8	-75.89
		618	-1.4	0.4	-1.1	0.7	-1.8	-77.42
		626	-1.0	0.4	-1.1	0.7	-1.6	-76.19
		625	-1.0	0.5	-1.1	0.6	-1.5	-74.35

	NODE	Mxx	Myy	Mxy	Mmax	Mmin	ANGLE
Max	Cent	-0.3	-4.1	-1.0	0.3	-4.5	-19.41
	617	2.7	-3.2	-1.0	3.1	-3.4	-14.00
	618	-2.1	-3.8	-1.1	-0.8	-4.6	-33.38
	626	-2.9	-4.9	-1.0	-1.9	-5.5	-28.16
	625	1.1	-4.4	-0.9	1.4	-4.6	-11.71
Min	Cent	-3.6	-4.9	-2.1	-2.5	-6.2	-32.87
	617	-1.3	-4.0	-2.1	-0.6	-4.9	-24.59
	618	-5.6	-4.7	-2.4	-3.5	-7.3	-54.35
	626	-5.9	-5.9	-2.2	-4.2	-7.7	-47.73
	625	-1.8	-5.8	-1.9	-1.3	-6.1	-18.52

	NODE	Vxx	Vyy
Max	Cent	8.1	3.5
	617	8.9	3.5
	618	8.9	3.5
	626	7.5	3.5
	625	7.5	3.5
Min	Cent	6.8	1.2
	617	7.3	1.4
	618	7.3	1.0
	626	6.3	1.0
	625	6.3	1.4

ELEM	MAT	SEC	LC		NODE	Fxx	Fyy	Fxy	Fmax	Fmin	ANGLE
588	1	1	SX (RS)		Cent	1.1	0.3	0.7	1.5	-0.1	30.89
					618	1.4	0.4	0.7	1.8	0.1	27.75
					619	1.4	0.2	0.7	1.7	-0.1	24.52
					627	0.7	0.2	0.7	1.2	-0.3	34.99
					626	0.7	0.4	0.7	1.3	-0.1	39.79

	NODE	Mxx	Myy	Mxy	Mmax	Mmin	ANGLE
	Cent	3.7	0.6	0.8	3.9	0.4	14.37
	618	4.3	1.0	0.9	4.5	0.7	13.54
	619	3.4	0.8	0.8	3.6	0.6	16.18
	627	3.3	0.5	0.8	3.5	0.3	14.95
	626	3.8	0.4	0.9	4.0	0.2	13.70

	NODE	Vxx	Vyy
	Cent	1.3	1.0
	618	1.6	1.2
	619	1.6	0.8
	627	1.0	0.8
	626	1.0	1.2

LC		NODE	Fxx	Fyy	Fxy	Fmax	Fmin	ANGLE
SY (RS)		Cent	0.5	0.3	1.7	2.1	-1.3	43.22
		618	0.7	0.5	1.7	2.3	-1.1	43.26
		619	0.7	0.1	1.7	2.1	-1.3	39.95
		627	0.3	0.1	1.7	1.9	-1.5	43.37
		626	0.3	0.5	1.7	2.1	-1.3	46.72

	NODE	Mxx	Myy	Mxy	Mmax	Mmin	ANGLE
	Cent	0.6	1.3	0.4	1.5	0.3	64.96
	618	0.5	0.9	0.4	1.2	0.2	57.74
	619	0.7	1.2	0.5	1.5	0.5	58.82
	627	0.6	1.5	0.4	1.7	0.4	68.24
	626	0.4	1.5	0.4	1.6	0.3	70.77

	NODE	Vxx	Vyy
	Cent	0.5	0.9
	618	0.6	1.2
	619	0.6	0.6
	627	0.3	0.6
	626	0.3	1.2

LC		NODE	Fxx	Fyy	Fxy	Fmax	Fmin	ANGLE
RC ENV~1	Max	Cent	0.5	1.3	1.2	1.9	0.4	-53.63
		618	0.6	1.2	1.2	1.8	0.5	57.61
		619	0.6	1.4	1.2	1.9	0.5	-57.29
		627	0.4	1.4	1.2	2.2	0.3	-52.58
		626	0.4	1.2	1.2	1.9	0.3	-49.50
	Min	Cent	-2.2	0.3	-2.2	0.8	-2.8	-73.87
		618	-2.9	0.0	-2.2	0.6	-3.5	-66.56
		619	-2.9	0.4	-2.2	0.8	-3.4	-69.51
		627	-1.5	0.4	-2.2	0.8	-2.4	-72.83
		626	-1.5	0.0	-2.2	0.8	-2.6	-57.73

	NODE	Mxx	Myy	Mxy	Mmax	Mmin	ANGLE
Max	Cent	-1.0	-3.4	-0.3	-0.9	-4.1	-4.71
	618	1.2	-3.0	-0.3	1.2	-3.0	-4.03
	619	-2.9	-3.5	-0.2	-2.8	-3.9	-12.09
	627	-2.6	-3.6	-0.2	-2.5	-4.7	-5.34
	626	0.4	-3.4	-0.3	0.4	-3.9	-2.93
Min	Cent	-10.4	-7.2	-3.5	-6.0	-12.1	-63.78
	618	-8.2	-6.3	-3.5	-4.9	-10.3	-57.31
	619	-12.6	-7.1	-3.5	-6.3	-13.8	-69.95
	627	-12.4	-7.9	-3.4	-6.9	-13.7	-66.10
	626	-8.6	-8.0	-3.4	-5.7	-11.0	-51.94

	NODE	Vxx	Vyy
Max	Cent	8.7	4.0
	618	9.7	4.9
	619	9.7	3.1
	627	7.7	3.1
	626	7.7	4.9
Min	Cent	3.6	0.3
	618	3.7	0.5
	619	3.7	0.2
	627	3.5	0.2
	626	3.5	0.5

LC		NODE	Fxx	Fyy	Fxy	Fmax	Fmin	ANGLE
RC ENV~2	Max	Cent	0.2	0.9	-0.2	1.3	0.1	-68.85
		618	0.2	0.9	-0.2	1.1	0.1	-71.86

		619	0.2	1.0	-0.2	1.4	0.1	-72.21
		627	0.2	1.0	-0.2	1.5	0.1	-66.64
		626	0.2	0.9	-0.2	1.2	0.1	-64.33
	Min	Cent	-1.6	0.5	-1.1	0.7	-2.0	-72.21
		618	-2.1	0.4	-1.1	0.7	-2.5	-69.66
		619	-2.1	0.6	-1.1	0.6	-2.4	-70.87
		627	-1.1	0.6	-1.1	0.6	-1.5	-70.83
		626	-1.1	0.4	-1.1	0.7	-1.6	-73.40

	NODE	Mxx	Myy	Mxy	Mmax	Mmin	ANGLE
Max	Cent	-4.4	-4.7	-1.0	-2.6	-5.7	-42.35
	618	-2.5	-3.9	-1.1	-1.0	-4.7	-35.85
	619	-6.1	-4.7	-1.0	-3.3	-6.7	-55.87
	627	-5.7	-5.2	-0.9	-3.8	-6.5	-49.45
	626	-3.1	-4.9	-1.1	-1.9	-5.5	-29.78
Min	Cent	-7.5	-5.4	-2.4	-4.5	-8.7	-62.35
	618	-5.8	-4.7	-2.4	-3.6	-7.4	-55.12
	619	-9.1	-5.3	-2.4	-4.8	-10.0	-69.73
	627	-8.9	-5.9	-2.3	-5.2	-9.8	-65.35
	626	-6.1	-5.9	-2.3	-4.2	-7.9	-48.70

	NODE	Vxx	Vyy
Max	Cent	6.4	2.8
	618	7.2	3.5
	619	7.2	2.2
	627	5.7	2.2
	626	5.7	3.5
Min	Cent	4.5	0.8
	618	4.7	1.0
	619	4.7	0.6
	627	4.3	0.6
	626	4.3	1.0

ELEM	MAT	SEC	LC		NODE	Fxx	Fyy	Fxy	Fmax	Fmin	ANGLE
589	1	1	SX	(RS)	Cent	1.0	0.2	0.6	1.4	-0.2	27.98
					619	1.3	0.2	0.6	1.6	-0.1	24.76
					620	1.3	0.2	0.6	1.6	-0.1	24.15
					628	0.8	0.2	0.6	1.2	-0.2	31.70
					627	0.8	0.2	0.6	1.2	-0.2	32.57

	NODE	Mxx	Myy	Mxy	Mmax	Mmin	ANGLE
	Cent	2.8	0.6	0.7	3.0	0.4	16.48
	619	3.3	0.8	0.8	3.5	0.6	15.71
	620	2.4	0.7	0.7	2.7	0.5	19.58
	628	2.4	0.5	0.7	2.7	0.3	17.50
	627	3.2	0.5	0.7	3.4	0.3	14.23

	NODE	Vxx	Vyy
	Cent	1.7	0.8
	619	1.8	0.8
	620	1.8	0.8
	628	1.6	0.8
	627	1.6	0.8

LC		NODE	Fxx	Fyy	Fxy	Fmax	Fmin	ANGLE
SY	(RS)	Cent	0.5	0.2	1.5	1.8	-1.1	42.09
		619	0.6	0.1	1.5	1.8	-1.1	40.15
		620	0.6	0.3	1.5	1.9	-1.0	42.05
		628	0.4	0.3	1.5	1.8	-1.1	43.94
		627	0.4	0.1	1.5	1.7	-1.2	42.02

	NODE	Mxx	Myy	Mxy	Mmax	Mmin	ANGLE
	Cent	0.6	1.4	0.5	1.6	0.4	65.35
	619	0.6	1.2	0.5	1.5	0.3	61.57
	620	0.6	1.3	0.5	1.5	0.4	62.35
	628	0.6	1.6	0.4	1.8	0.4	68.32
	627	0.6	1.5	0.5	1.7	0.4	68.25

	NODE	Vxx	Vyy

		Cent	0.1	0.6
		619	0.2	0.6
		620	0.2	0.6
		628	0.1	0.6
		627	0.1	0.6

LC		NODE	Fxx	Fyy	Fxy	Fmax	Fmin	ANGLE
RC ENV~1	Max	Cent	0.4	1.4	1.1	1.7	0.3	-74.48
		619	0.5	1.4	1.1	1.7	0.4	-76.02
		620	0.5	1.5	1.1	1.7	0.4	-76.13
		628	0.4	1.5	1.1	1.8	0.3	-72.62
		627	0.4	1.4	1.1	1.8	0.3	-55.09
	Min	Cent	-2.2	0.4	-1.8	0.8	-2.4	-67.44
		619	-2.6	0.4	-1.8	0.8	-2.9	-70.21
		620	-2.6	0.3	-1.8	0.8	-2.9	-68.84
		628	-1.7	0.3	-1.8	0.8	-2.2	-65.32
		627	-1.7	0.4	-1.8	0.8	-2.1	-65.90

		NODE	Mxx	Myy	Mxy	Mmax	Mmin	ANGLE
	Max	Cent	-3.9	-3.7	-0.0	-3.7	-4.5	-83.92
		619	-2.9	-3.5	-0.1	-2.9	-3.9	-3.56
		620	-5.3	-3.9	0.1	-3.9	-5.3	-87.71
		628	-4.8	-3.9	0.1	-3.8	-4.9	-86.35
		627	-2.7	-3.6	-0.1	-2.7	-4.7	-3.04
	Min	Cent	-13.5	-7.6	-3.2	-6.9	-14.4	-74.32
		619	-12.7	-7.1	-3.4	-6.4	-13.8	-73.24
		620	-14.5	-7.4	-3.2	-6.8	-15.2	-77.49
		628	-14.1	-8.0	-3.1	-7.6	-15.0	-75.41
		627	-12.6	-7.9	-3.3	-7.1	-13.7	-68.34

		NODE	Vxx	Vyy
	Max	Cent	4.5	2.8
		619	4.8	3.1
		620	4.8	2.5
		628	4.2	2.5
		627	4.2	3.1
	Min	Cent	0.7	0.1
		619	0.7	0.2
		620	0.7	-0.0
		628	0.7	-0.0
		627	0.7	0.2

LC		NODE	Fxx	Fyy	Fxy	Fmax	Fmin	ANGLE
RC ENV~2	Max	Cent	0.2	1.0	-0.2	1.3	0.1	-74.49
		619	0.1	1.0	-0.2	1.2	0.1	-76.01
		620	0.1	1.1	-0.2	1.2	0.1	-76.12
		628	0.2	1.1	-0.2	1.3	0.1	-72.64
		627	0.2	1.0	-0.2	1.3	0.1	-72.47
	Min	Cent	-1.5	0.6	-0.8	0.6	-1.7	-70.03
		619	-1.9	0.6	-0.8	0.6	-2.0	-71.76
		620	-1.9	0.6	-0.8	0.6	-2.0	-71.50
		628	-1.2	0.6	-0.8	0.6	-1.4	-68.02
		627	-1.2	0.6	-0.8	0.6	-1.4	-68.36

		NODE	Mxx	Myy	Mxy	Mmax	Mmin	ANGLE
	Max	Cent	-6.6	-5.1	-0.6	-4.2	-7.0	-60.00
		619	-6.0	-4.6	-0.7	-3.5	-6.5	-57.23
		620	-7.6	-5.1	-0.5	-4.4	-7.8	-67.28
		628	-7.1	-5.4	-0.5	-4.8	-7.3	-62.98
		627	-5.7	-5.2	-0.8	-4.0	-6.4	-50.87
	Min	Cent	-9.8	-5.7	-2.2	-5.3	-10.4	-74.46
		619	-9.2	-5.4	-2.3	-4.8	-9.9	-73.24
		620	-10.6	-5.6	-2.1	-5.2	-11.1	-78.06
		628	-10.2	-6.1	-2.1	-5.7	-10.8	-75.74
		627	-9.0	-5.9	-2.2	-5.4	-9.9	-67.81

		NODE	Vxx	Vyy
	Max	Cent	3.3	2.0
		619	3.5	2.2
		620	3.5	1.8
		628	3.1	1.8

		627	3.1	2.2	
	Min	Cent	1.8	0.6	
		619	1.9	0.6	
		620	1.9	0.6	
		628	1.7	0.6	
		627	1.7	0.6	

ELEM	MAT	SEC	LC		NODE	Fxx	Fyy	Fxy	Fmax	Fmin	ANGLE
590	1	1	SX (RS)		Cent	0.9	0.2	0.6	1.2	-0.1	28.66
					620	1.1	0.2	0.6	1.4	-0.1	25.06
					621	1.1	0.2	0.6	1.4	-0.1	25.08
					629	0.7	0.2	0.6	1.1	-0.2	32.57
					628	0.7	0.2	0.6	1.1	-0.2	32.54

	NODE	Mxx	Myy	Mxy	Mmax	Mmin	ANGLE
	Cent	2.0	0.5	0.6	2.3	0.3	19.70
	620	2.4	0.7	0.7	2.7	0.5	18.97
	621	1.9	0.6	0.6	2.1	0.4	22.42
	629	1.7	0.5	0.6	1.9	0.3	21.65
	628	2.3	0.5	0.6	2.5	0.3	16.67

	NODE	Vxx	Vyy
	Cent	1.8	0.9
	620	1.9	0.8
	621	1.9	1.0
	629	1.7	1.0
	628	1.7	0.8

LC		NODE	Fxx	Fyy	Fxy	Fmax	Fmin	ANGLE
SY (RS)		Cent	0.5	0.4	1.4	1.9	-1.0	43.66
		620	0.6	0.3	1.4	1.9	-1.0	41.79
		621	0.6	0.5	1.4	2.0	-0.9	43.69
		629	0.4	0.5	1.4	1.9	-1.0	45.38
		628	0.4	0.3	1.4	1.8	-1.0	43.47

	NODE	Mxx	Myy	Mxy	Mmax	Mmin	ANGLE
	Cent	0.6	1.4	0.4	1.5	0.4	67.23
	620	0.6	1.3	0.5	1.5	0.4	63.21
	621	0.6	1.1	0.4	1.3	0.4	62.89
	629	0.6	1.5	0.3	1.6	0.5	71.51
	628	0.6	1.6	0.4	1.7	0.5	69.98

	NODE	Vxx	Vyy
	Cent	0.1	0.7
	620	0.1	0.6
	621	0.1	0.7
	629	0.2	0.7
	628	0.2	0.6

LC		NODE	Fxx	Fyy	Fxy	Fmax	Fmin	ANGLE
RC ENV~1	Max	Cent	0.4	1.5	1.2	1.8	0.2	57.31
		620	0.5	1.5	1.2	1.7	0.2	56.52
		621	0.5	1.6	1.2	1.9	0.3	58.75
		629	0.3	1.6	1.2	1.9	0.3	57.91
		628	0.3	1.5	1.2	1.7	0.3	55.62
	Min	Cent	-2.0	0.3	-1.7	0.7	-2.2	-74.39
		620	-2.3	0.3	-1.7	0.7	-2.5	-76.53
		621	-2.3	0.2	-1.7	0.7	-2.5	-77.11
		629	-1.6	0.2	-1.7	0.8	-2.1	-71.55
		628	-1.6	0.3	-1.7	0.7	-2.0	-70.44

		NODE	Mxx	Myy	Mxy	Mmax	Mmin	ANGLE
	Max	Cent	-5.4	-4.0	0.4	-4.0	-5.6	86.64
		620	-5.3	-3.9	0.3	-3.9	-5.4	88.04
		621	-5.8	-4.0	0.5	-4.0	-6.0	84.35
		629	-5.5	-4.1	0.5	-4.1	-5.8	84.85
		628	-4.8	-3.8	0.2	-3.8	-5.1	89.49
	Min	Cent	-13.9	-7.5	-2.8	-7.2	-14.5	-81.29

620	-14.6	-7.4	-3.0	-7.0	-15.3	-79.83
621	-13.6	-6.9	-2.7	-6.7	-14.1	-77.46
629	-13.3	-8.0	-2.7	-7.9	-13.9	-80.83
628	-14.1	-8.0	-2.9	-7.7	-14.9	-78.44

	NODE	Vxx	Vyy
Max	Cent	1.8	2.8
	620	1.9	2.5
	621	1.9	3.1
	629	1.7	3.1
	628	1.7	2.5
Min	Cent	-1.8	0.0
	620	-2.0	-0.0
	621	-2.0	0.1
	629	-1.7	0.1
	628	-1.7	-0.0

LC		NODE	Fxx	Fyy	Fxy	Fmax	Fmin	ANGLE
RC ENV~2	Max	Cent	0.1	1.1	-0.1	1.2	0.1	-79.23
		620	-0.0	1.1	-0.1	1.2	-0.0	-80.04
		621	-0.0	1.2	-0.1	1.2	-0.0	-80.29
		629	0.2	1.2	-0.1	1.3	0.1	-78.30
		628	0.2	1.1	-0.1	1.2	0.1	-77.94
	Min	Cent	-1.4	0.6	-0.5	0.6	-1.5	-76.07
		620	-1.7	0.5	-0.5	0.6	-1.7	-77.70
		621	-1.7	0.6	-0.5	0.6	-1.7	-78.16
		629	-1.2	0.6	-0.5	0.6	-1.3	-73.99
		628	-1.2	0.5	-0.5	0.6	-1.3	-73.19

	NODE	Mxx	Myy	Mxy	Mmax	Mmin	ANGLE
Max	Cent	-7.4	-5.3	-0.1	-4.8	-7.4	-68.50
	620	-7.6	-5.1	-0.2	-4.6	-7.7	-68.84
	621	-7.6	-4.9	0.1	-4.5	-7.6	-70.72
	629	-7.1	-5.6	0.0	-5.1	-7.1	-67.87
	628	-7.0	-5.4	-0.3	-5.0	-7.1	-65.32
Min	Cent	-10.1	-5.7	-1.8	-5.5	-10.5	-82.40
	620	-10.7	-5.6	-1.9	-5.3	-11.0	-80.75
	621	-10.0	-5.3	-1.8	-5.2	-10.3	-79.19
	629	-9.7	-6.1	-1.7	-6.0	-10.1	-82.43
	628	-10.2	-6.1	-1.9	-5.8	-10.7	-79.19

	NODE	Vxx	Vyy
Max	Cent	0.3	2.0
	620	0.3	1.8
	621	0.3	2.2
	629	0.3	2.2
	628	0.3	1.8
Min	Cent	-1.1	0.9
	620	-1.2	0.6
	621	-1.2	1.0
	629	-1.0	1.0
	628	-1.0	0.6

ELEM	MAT	SEC	LC		NODE	Fxx	Fyy	Fxy	Fmax	Fmin	ANGLE
591	1	1	SX (RS)		Cent	0.7	0.3	0.5	1.1	-0.0	33.35
					621	1.0	0.2	0.5	1.3	-0.1	25.26
					622	1.0	0.4	0.5	1.3	0.1	30.08
					630	0.5	0.4	0.5	1.0	-0.0	42.95
					629	0.5	0.2	0.5	0.9	-0.2	36.08

	NODE	Mxx	Myy	Mxy	Mmax	Mmin	ANGLE
	Cent	1.7	0.4	0.5	1.9	0.3	18.26
	621	1.9	0.6	0.6	2.2	0.4	20.87
	622	2.2	0.5	0.5	2.3	0.4	14.63
	630	1.4	0.7	0.4	1.6	0.5	25.10
	629	1.7	0.5	0.5	1.9	0.3	19.17

	NODE	Vxx	Vyy
	Cent	1.7	1.3
	621	2.1	1.0

622	2.1	1.6		
630	1.4	1.6		
629	1.4	1.0		

LC		NODE	Fxx	Fyy	Fxy	Fmax	Fmin	ANGLE
SY (RS)		Cent	0.6	0.4	1.6	2.1	-1.0	43.54
		621	0.8	0.5	1.6	2.2	-0.9	41.68
		622	0.8	0.5	1.6	2.2	-0.9	41.69
		630	0.4	0.5	1.6	2.0	-1.1	45.43
		629	0.4	0.5	1.6	2.0	-1.1	45.42

	NODE	Mxx	Myy	Mxy	Mmax	Mmin	ANGLE
	Cent	0.5	1.1	0.2	1.2	0.5	72.83
	621	0.7	1.2	0.3	1.3	0.6	62.45
	622	0.4	0.7	0.2	0.8	0.3	62.06
	630	0.6	1.3	0.2	1.4	0.5	75.57
	629	0.6	1.5	0.2	1.5	0.5	76.08

	NODE	Vxx	Vyy
	Cent	0.7	1.2
	621	0.9	0.7
	622	0.9	1.7
	630	0.5	1.7
	629	0.5	0.7

LC		NODE	Fxx	Fyy	Fxy	Fmax	Fmin	ANGLE
RC ENV~1	Max	Cent	0.2	1.7	1.4	2.1	0.1	55.48
		621	0.4	1.6	1.4	2.2	0.2	54.26
		622	0.4	1.8	1.4	2.2	0.2	54.84
		630	0.2	1.8	1.4	2.1	0.2	56.68
		629	0.2	1.6	1.4	2.1	0.2	56.13
	Min	Cent	-1.9	0.2	-1.7	0.6	-2.3	-71.14
		621	-2.1	0.2	-1.7	0.7	-2.6	-74.41
		622	-2.1	0.2	-1.7	0.5	-2.5	-73.20
		630	-1.6	0.2	-1.7	0.6	-2.1	-66.91
		629	-1.6	0.2	-1.7	0.7	-2.1	-84.12

		NODE	Mxx	Myy	Mxy	Mmax	Mmin	ANGLE
	Max	Cent	-5.0	-4.2	0.8	-4.0	-5.8	75.44
		621	-5.8	-4.0	0.8	-3.9	-6.2	80.06
		622	-4.0	-4.1	1.0	-3.2	-5.1	40.77
		630	-4.6	-4.4	0.8	-4.0	-5.7	36.85
		629	-5.3	-4.1	0.6	-4.0	-5.8	80.68
	Min	Cent	-11.7	-7.1	-2.3	-7.1	-12.5	-89.61
		621	-13.8	-7.0	-2.5	-6.8	-14.2	-80.30
		622	-10.3	-6.1	-2.2	-6.0	-11.2	-77.12
		630	-10.3	-8.3	-2.2	-8.3	-11.4	85.04
		629	-13.1	-7.9	-2.4	-7.9	-13.7	-85.33

		NODE	Vxx	Vyy
	Max	Cent	-0.6	4.0
		621	-0.5	3.1
		622	-0.5	5.0
		630	-0.6	5.0
		629	-0.6	3.1
	Min	Cent	-6.3	0.2
		621	-7.1	0.1
		622	-7.1	0.2
		630	-5.6	0.2
		629	-5.6	0.1

LC		NODE	Fxx	Fyy	Fxy	Fmax	Fmin	ANGLE
RC ENV~2	Max	Cent	-0.0	1.2	-0.0	1.3	-0.0	-83.32
		621	-0.1	1.2	-0.0	1.2	-0.1	-83.58
		622	-0.1	1.3	-0.0	1.3	-0.1	-83.90
		630	0.1	1.3	-0.0	1.4	0.1	-83.03
		629	0.1	1.2	-0.0	1.2	0.1	-82.61
	Min	Cent	-1.3	0.6	-0.3	0.6	-1.4	-85.13
		621	-1.5	0.5	-0.3	0.5	-1.5	-85.75

622	-1.5	0.6	-0.3	0.6	-1.5	-85.93
630	-1.1	0.6	-0.3	0.6	-1.2	-84.31
629	-1.1	0.5	-0.3	0.5	-1.2	-83.94

	NODE	Mxx	Myy	Mxy	Mmax	Mmin	ANGLE
Max	Cent	-6.7	-5.2	0.5	-4.7	-6.8	-69.68
	621	-7.7	-4.9	0.4	-4.7	-7.7	-73.11
	622	-6.1	-4.3	0.7	-4.0	-6.3	-69.76
	630	-5.9	-5.6	0.6	-4.9	-6.3	-63.30
	629	-7.0	-5.5	0.3	-5.2	-7.0	-69.54
Min	Cent	-8.6	-5.5	-1.4	-5.5	-9.0	-87.32
	621	-10.1	-5.3	-1.5	-5.3	-10.3	-82.61
	622	-7.6	-4.8	-1.3	-4.7	-8.1	89.59
	630	-7.5	-6.3	-1.3	-6.2	-8.2	62.38
	629	-9.5	-6.0	-1.5	-6.0	-9.9	-87.84

	NODE	Vxx	Vyy
Max	Cent	-2.2	2.8
	621	-2.5	2.2
	622	-2.5	3.6
	630	-1.9	3.6
	629	-1.9	2.2
Min	Cent	-4.4	1.5
	621	-5.0	1.0
	622	-5.0	1.9
	630	-3.9	1.9
	629	-3.9	1.0

ELEM	MAT	SEC	LC	NODE	Fxx	Fyy	Fxy	Fmax	Fmin	ANGLE
592	1	1	SX (RS)	Cent	0.4	0.4	0.5	0.9	-0.2	44.25
				622	0.4	0.4	0.5	0.9	-0.1	44.40
				623	0.4	0.3	0.5	0.9	-0.2	42.58
				631	0.4	0.3	0.5	0.9	-0.2	44.17
				630	0.4	0.4	0.5	0.9	-0.2	46.00

NODE	Mxx	Myy	Mxy	Mmax	Mmin	ANGLE
Cent	1.7	0.4	0.5	1.9	0.2	19.23
622	2.5	0.6	0.4	2.6	0.5	11.11
623	2.0	0.4	0.6	2.2	0.2	18.63
631	1.1	0.7	0.7	1.6	0.1	37.66
630	1.4	0.7	0.4	1.6	0.5	25.23

NODE	Vxx	Vyy
Cent	1.0	1.0
622	1.1	1.6
623	1.1	0.3
631	0.9	0.3
630	0.9	1.6

LC	NODE	Fxx	Fyy	Fxy	Fmax	Fmin	ANGLE
SY (RS)	Cent	0.4	0.7	1.5	2.0	-1.0	48.03
	622	0.3	0.5	1.5	1.9	-1.1	46.83
	623	0.3	1.1	1.5	2.2	-0.9	52.13
	631	0.4	1.1	1.5	2.3	-0.8	50.82
	630	0.4	0.5	1.5	2.0	-1.0	45.45

NODE	Mxx	Myy	Mxy	Mmax	Mmin	ANGLE
Cent	0.6	0.9	0.4	1.2	0.3	57.22
622	0.6	0.7	0.3	0.9	0.4	53.56
623	0.9	0.8	0.4	1.3	0.4	39.75
631	0.8	1.5	0.4	1.7	0.6	63.89
630	0.6	1.3	0.3	1.4	0.5	71.14

NODE	Vxx	Vyy
Cent	1.4	2.4
622	1.9	1.7
623	1.9	3.2
631	0.9	3.2
630	0.9	1.7

LC		NODE	Fxx	Fyy	Fxy	Fmax	Fmin	ANGLE
RC ENV~1	Max	Cent	-0.0	1.9	1.4	2.3	-0.0	60.02
		622	-0.1	1.8	1.4	2.0	-0.1	59.37
		623	-0.1	2.0	1.4	2.5	-0.1	63.88
		631	0.0	2.0	1.4	2.6	0.0	61.88
		630	0.0	1.8	1.4	2.1	0.0	56.93
	Min	Cent	-1.8	0.1	-1.6	0.6	-2.1	-69.10
		622	-2.1	0.2	-1.6	0.6	-2.1	-69.47
		623	-2.1	-0.3	-1.6	0.7	-2.2	-70.85
		631	-1.6	-0.3	-1.6	0.7	-2.2	-68.69
		630	-1.6	0.2	-1.6	0.6	-2.0	-67.03

		NODE	Mxx	Myy	Mxy	Mmax	Mmin	ANGLE
	Max	Cent	-3.1	-4.3	1.2	-2.5	-5.3	27.21
		622	-3.5	-4.1	1.1	-2.7	-5.0	36.35
		623	-1.4	-3.6	1.3	-0.8	-4.3	22.86
		631	-3.0	-4.5	1.3	-2.4	-5.1	24.66
		630	-4.3	-4.4	1.0	-3.6	-5.8	35.45
	Min	Cent	-7.7	-6.7	-2.0	-6.1	-9.1	-22.47
		622	-10.3	-6.1	-2.0	-6.0	-11.0	-78.47
		623	-5.3	-5.2	-2.1	-4.7	-6.6	78.80
		631	-5.8	-8.6	-2.1	-5.2	-8.6	-22.20
		630	-10.2	-8.2	-2.0	-8.1	-11.2	55.30

		NODE	Vxx	Vyy
	Max	Cent	-2.4	5.9
		622	-2.7	5.0
		623	-2.7	6.9
		631	-2.1	6.9
		630	-2.1	5.0
	Min	Cent	-9.8	-0.1
		622	-11.1	0.2
		623	-11.1	-0.3
		631	-8.6	-0.3
		630	-8.6	0.2

LC		NODE	Fxx	Fyy	Fxy	Fmax	Fmin	ANGLE
RC ENV~2	Max	Cent	-0.1	1.4	-0.0	1.4	-0.1	-86.55
		622	-0.2	1.3	-0.0	1.3	-0.2	-86.68
		623	-0.2	1.4	-0.0	1.4	-0.2	-86.82
		631	-0.1	1.4	-0.0	1.5	-0.1	-86.41
		630	-0.1	1.3	-0.0	1.3	-0.1	-86.23
	Min	Cent	-1.3	0.6	-0.2	0.6	-1.3	-88.58
		622	-1.5	0.6	-0.2	0.6	-1.5	-88.57
		623	-1.5	0.7	-0.2	0.7	-1.5	-88.77
		631	-1.1	0.7	-0.2	0.7	-1.2	-88.59
		630	-1.1	0.6	-0.2	0.6	-1.2	-88.31

		NODE	Mxx	Myy	Mxy	Mmax	Mmin	ANGLE
	Max	Cent	-4.3	-4.7	0.8	-4.0	-5.0	-56.57
		622	-5.8	-4.3	0.9	-4.1	-6.3	-71.47
		623	-1.6	-3.4	0.9	-1.6	-3.6	9.34
		631	-3.2	-5.3	0.7	-3.2	-5.7	2.10
		630	-5.6	-5.6	0.7	-5.0	-6.3	40.79
	Min	Cent	-5.7	-5.3	-1.2	-4.9	-6.5	41.33
		622	-7.6	-4.8	-1.2	-4.7	-7.9	-84.08
		623	-3.5	-4.4	-1.2	-3.3	-4.8	12.65
		631	-4.4	-6.5	-1.2	-4.2	-6.5	2.88
		630	-7.5	-6.2	-1.2	-6.0	-8.0	88.01

		NODE	Vxx	Vyy
	Max	Cent	-3.8	4.2
		622	-4.6	3.6
		623	-4.6	5.0
		631	-3.0	5.0
		630	-3.0	3.6
	Min	Cent	-6.9	2.4
		622	-7.9	1.9
		623	-7.9	2.8
		631	-6.0	2.8

					630	-6.0	1.9			
ELEM	MAT	SEC	LC		NODE	Fxx	Fyy	Fxy	Fmax	Fmin	ANGLE
593	1	1	SX (RS)		Cent	0.2	0.2	0.6	0.8	-0.4	44.03
					623	0.4	0.3	0.6	1.0	-0.2	42.47
					624	0.4	0.0	0.6	0.9	-0.4	35.62
					632	0.1	0.0	0.6	0.6	-0.5	43.76
					631	0.1	0.3	0.6	0.8	-0.4	50.87
					NODE	Mxx	Myy	Mxy	Mmax	Mmin	ANGLE
					Cent	1.1	0.2	1.3	2.0	-0.7	35.01
					623	1.8	0.4	1.1	2.4	-0.2	29.51
					624	2.0	0.4	1.7	3.1	-0.7	32.60
					632	0.1	0.0	1.4	1.5	-1.4	43.97
					631	0.9	0.7	0.9	1.7	-0.0	41.73
					NODE	Vxx	Vyy				
					Cent	1.2	0.2				
					623	0.9	0.3				
					624	0.9	0.0				
					632	2.1	0.0				
					631	2.1	0.3				
			LC		NODE	Fxx	Fyy	Fxy	Fmax	Fmin	ANGLE
			SY (RS)		Cent	0.3	1.2	0.6	1.5	-0.0	62.68
					623	0.4	1.0	0.6	1.4	-0.0	58.02
					624	0.4	1.4	0.6	1.7	0.1	64.90
					632	0.4	1.4	0.6	1.7	0.1	64.62
					631	0.4	1.0	0.6	1.4	-0.0	57.64
					NODE	Mxx	Myy	Mxy	Mmax	Mmin	ANGLE
					Cent	1.3	0.9	0.3	1.4	0.7	26.50
					623	1.5	0.8	0.4	1.7	0.6	27.04
					624	1.9	0.8	0.2	2.0	0.7	9.13
					632	1.0	1.7	0.1	1.7	1.0	82.31
					631	0.8	1.5	0.3	1.7	0.7	67.96
					NODE	Vxx	Vyy				
					Cent	0.7	3.3				
					623	0.9	3.2				
					624	0.9	3.3				
					632	0.5	3.3				
					631	0.5	3.2				
			LC		NODE	Fxx	Fyy	Fxy	Fmax	Fmin	ANGLE
			RC ENV~1	Max	Cent	-0.3	2.0	0.6	2.2	-0.3	75.98
					623	-0.2	2.0	0.6	2.0	-0.4	-88.67
					624	-0.2	2.3	0.6	2.4	-0.4	77.15
					632	-0.1	2.3	0.6	2.4	-0.1	76.40
					631	-0.1	2.0	0.6	2.0	-0.1	-88.54
				Min	Cent	-1.8	-0.4	-0.7	0.1	-1.8	-55.34
					623	-2.0	-0.2	-0.7	0.2	-2.0	-61.12
					624	-2.0	-0.6	-0.7	-0.1	-2.0	-53.99
					632	-1.6	-0.6	-0.7	-0.1	-1.6	-51.61
					631	-1.6	-0.2	-0.7	0.2	-1.6	-59.20
					NODE	Mxx	Myy	Mxy	Mmax	Mmin	ANGLE
				Max	Cent	-0.1	-3.9	1.6	0.3	-4.1	-25.83
					623	-1.5	-3.5	1.5	-0.8	-3.9	25.90
					624	4.4	-2.1	1.8	5.2	-2.8	-23.15
					632	1.1	-3.7	1.6	2.1	-3.7	-19.38
					631	-3.2	-4.5	1.4	-2.5	-4.9	26.63
				Min	Cent	-3.9	-5.8	-2.8	-3.9	-6.4	1.09
					623	-5.0	-5.2	-2.7	-4.7	-7.3	-3.64
					624	-2.9	-4.3	-3.3	-2.8	-5.1	-4.75
					632	-3.3	-7.4	-2.9	-3.3	-7.6	1.20
					631	-6.1	-8.5	-2.3	-5.3	-8.8	-26.49

	NODE	Vxx	Vyy
Max	Cent	-2.3	7.2
	623	-3.0	6.9
	624	-3.0	7.4
	632	-1.0	7.4
	631	-1.0	6.9
Min	Cent	-11.1	-0.3
	623	-11.8	-0.3
	624	-11.8	-0.2
	632	-10.6	-0.2
	631	-10.6	-0.3

LC		NODE	Fxx	Fyy	Fxy	Fmax	Fmin	ANGLE
RC ENV~2	Max	Cent	-0.3	1.5	0.0	1.5	-0.3	-88.66
		623	-0.4	1.4	0.0	1.5	-0.4	-88.72
		624	-0.4	1.5	0.0	1.5	-0.4	-88.72
		632	-0.2	1.5	0.0	1.5	-0.2	-88.60
		631	-0.2	1.4	0.0	1.5	-0.2	-88.59
	Min	Cent	-1.3	0.7	-0.1	0.7	-1.3	89.49
		623	-1.4	0.6	-0.1	0.6	-1.4	89.50
		624	-1.4	0.8	-0.1	0.8	-1.4	89.56
		632	-1.1	0.8	-0.1	0.8	-1.1	89.47
		631	-1.1	0.6	-0.1	0.6	-1.1	89.39

	NODE	Mxx	Myy	Mxy	Mmax	Mmin	ANGLE
Max	Cent	-0.4	-3.7	0.4	-0.3	-4.5	-22.95
	623	-1.5	-3.4	0.5	-1.4	-3.5	-7.13
	624	2.7	-1.9	0.1	3.1	-2.6	-21.14
	632	0.3	-3.9	0.2	0.9	-4.7	-17.19
	631	-3.1	-5.3	0.6	-3.1	-5.8	-3.43
Min	Cent	-2.6	-4.9	-1.7	-2.6	-4.9	8.11
	623	-3.5	-4.4	-1.6	-3.3	-5.2	-11.00
	624	-0.9	-3.5	-2.1	-0.9	-3.5	2.02
	632	-2.3	-5.7	-1.8	-2.3	-5.8	3.20
	631	-4.6	-6.5	-1.4	-4.2	-6.5	-0.56

	NODE	Vxx	Vyy
Max	Cent	-3.5	5.2
	623	-4.0	5.0
	624	-4.0	5.4
	632	-3.0	5.4
	631	-3.0	5.0
Min	Cent	-7.6	2.8
	623	-8.2	2.8
	624	-8.2	2.9
	632	-7.3	2.9
	631	-7.3	2.8

ELEM	MAT	SEC	LC		NODE	Fxx	Fyy	Fxy	Fmax	Fmin	ANGLE
594	1	1	SX (RS)		Cent	0.3	0.6	0.5	1.0	-0.1	52.12
					183	0.4	0.7	0.5	1.1	-0.0	54.46
					625	0.4	0.5	0.5	1.0	-0.1	46.95
					633	0.3	0.5	0.5	0.9	-0.2	49.86
					186	0.3	0.7	0.5	1.1	-0.1	57.01

	NODE	Mxx	Myy	Mxy	Mmax	Mmin	ANGLE
	Cent	2.8	0.8	1.4	3.5	0.1	26.42
	183	2.4	1.1	1.4	3.3	0.3	32.40
	625	3.4	0.6	1.3	3.9	0.1	21.56
	633	3.2	0.5	1.3	3.8	-0.1	22.42
	186	2.4	0.9	1.4	3.2	0.0	31.29

	NODE	Vxx	Vyy
	Cent	1.8	0.4
	183	2.0	0.5
	625	2.0	0.4
	633	1.7	0.4
	186	1.7	0.5

LC		NODE	Fxx	Fyy	Fxy	Fmax	Fmin	ANGLE
SY (RS)		Cent	0.1	0.8	1.1	1.6	-0.7	54.09
		183	0.3	0.9	1.1	1.8	-0.6	53.40
		625	0.3	0.7	1.1	1.6	-0.7	50.44
		633	0.3	0.7	1.1	1.7	-0.6	49.38
		186	0.3	0.9	1.1	1.8	-0.5	52.39

		NODE	Mxx	Myy	Mxy	Mmax	Mmin	ANGLE
		Cent	0.2	1.8	0.2	1.8	0.2	83.32
		183	0.2	1.4	0.2	1.4	0.2	81.97
		625	0.2	1.4	0.2	1.5	0.2	80.19
		633	0.4	2.2	0.2	2.2	0.3	83.22
		186	0.4	2.3	0.2	2.3	0.4	84.20

		NODE	Vxx	Vyy
		Cent	0.2	1.7
		183	0.5	1.8
		625	0.5	1.5
		633	0.1	1.5
		186	0.1	1.8

LC		NODE	Fxx	Fyy	Fxy	Fmax	Fmin	ANGLE
RC ENV~1	Max	Cent	0.1	1.6	0.8	1.9	0.1	-71.09
		183	0.1	1.8	0.8	2.1	0.1	-72.76
		625	0.1	1.4	0.8	1.7	0.1	-70.61
		633	0.2	1.4	0.8	1.7	0.0	-69.14
		186	0.2	1.8	0.8	2.1	0.1	-71.56
	Min	Cent	-0.8	-0.1	-1.5	0.8	-1.7	-54.85
		183	-0.9	-0.2	-1.5	0.6	-1.9	-54.59
		625	-0.9	-0.0	-1.5	0.8	-1.8	-57.40
		633	-0.7	-0.0	-1.5	0.8	-1.8	-55.03
		186	-0.7	-0.2	-1.5	0.7	-1.9	-52.03

		NODE	Mxx	Myy	Mxy	Mmax	Mmin	ANGLE
	Max	Cent	5.3	-1.6	0.6	5.4	-1.7	4.25
		183	7.4	-1.5	0.7	7.5	-1.6	-5.48
		625	3.8	-2.7	0.5	3.8	-2.8	4.06
		633	3.3	-1.7	0.5	3.3	-1.9	3.96
		186	7.0	-0.5	0.7	7.0	-0.6	4.23
	Min	Cent	-0.3	-6.3	-2.2	0.6	-6.4	-23.75
		183	2.5	-5.4	-2.0	3.0	-5.6	-15.85
		625	-3.0	-6.8	-2.3	-2.0	-7.4	-18.15
		633	-3.1	-7.3	-2.4	-2.4	-7.6	-20.46
		186	2.3	-5.7	-2.2	3.0	-5.8	-17.88

		NODE	Vxx	Vyy
	Max	Cent	12.0	1.3
		183	11.9	1.6
		625	11.9	1.1
		633	12.2	1.1
		186	12.2	1.6
	Min	Cent	5.9	-2.0
		183	5.7	-2.1
		625	5.7	-2.0
		633	6.0	-2.0
		186	6.0	-2.1

LC		NODE	Fxx	Fyy	Fxy	Fmax	Fmin	ANGLE
RC ENV~2	Max	Cent	0.1	1.2	-0.3	1.4	-0.1	-71.12
		183	0.0	1.3	-0.3	1.5	-0.1	-72.74
		625	0.0	1.0	-0.3	1.2	-0.1	-70.65
		633	0.1	1.0	-0.3	1.3	-0.1	-69.23
		186	0.1	1.3	-0.3	1.5	-0.1	-71.57
	Min	Cent	-0.6	0.5	-0.7	0.7	-0.8	-64.78
		183	-0.6	0.5	-0.7	0.6	-0.8	-63.18
		625	-0.6	0.6	-0.7	0.7	-0.9	-67.51
		633	-0.5	0.6	-0.7	0.8	-0.7	-66.06
		186	-0.5	0.5	-0.7	0.6	-0.7	-61.68

		NODE	Mxx	Myy	Mxy	Mmax	Mmin	ANGLE

Max	Cent	3.2	-3.4	-0.7	3.3	-3.5	-7.58
	183	5.6	-2.9	-0.5	5.7	-2.9	-5.12
	625	1.2	-4.1	-0.7	1.4	-4.2	-9.59
	633	0.6	-3.9	-0.8	0.9	-4.1	-14.55
	186	5.2	-2.8	-0.6	5.3	-2.9	-6.12
Min	Cent	0.7	-4.6	-1.5	1.0	-4.7	-13.54
	183	3.4	-4.0	-1.4	3.6	-4.1	-8.90
	625	-1.7	-5.0	-1.6	-1.3	-5.4	-20.87
	633	-2.0	-5.4	-1.7	-1.6	-5.6	-18.10
	186	3.2	-4.1	-1.5	3.4	-4.2	-9.47

	NODE	Vxx	Vyy
Max	Cent	9.0	0.4
	183	8.9	0.4
	625	8.9	0.4
	633	9.1	0.4
	186	9.1	0.4
Min	Cent	7.5	-0.6
	183	7.4	-0.5
	625	7.4	-0.7
	633	7.6	-0.7
	186	7.6	-0.5

ELEM	MAT	SEC	LC	NODE	Fxx	Fyy	Fxy	Fmax	Fmin	ANGLE
595	1	1	SX (RS)	Cent	0.5	0.4	0.7	1.1	-0.2	41.99
				625	0.7	0.5	0.7	1.2	-0.1	40.86
				626	0.7	0.4	0.7	1.2	-0.2	38.53
				634	0.5	0.4	0.7	1.1	-0.2	41.83
				633	0.5	0.5	0.7	1.1	-0.2	44.22

	NODE	Mxx	Myy	Mxy	Mmax	Mmin	ANGLE
	Cent	3.6	0.5	1.1	4.0	0.1	17.52
	625	3.7	0.7	1.2	4.1	0.3	18.98
	626	3.8	0.4	1.0	4.1	0.1	15.48
	634	3.6	0.4	1.1	3.9	0.0	16.39
	633	3.5	0.5	1.2	3.9	0.1	19.58

	NODE	Vxx	Vyy
	Cent	0.4	0.4
	625	0.4	0.4
	626	0.4	0.5
	634	0.4	0.5
	633	0.4	0.4

LC	NODE	Fxx	Fyy	Fxy	Fmax	Fmin	ANGLE
SY (RS)	Cent	0.2	0.6	1.6	1.9	-1.2	48.59
	625	0.2	0.7	1.6	2.0	-1.2	49.95
	626	0.2	0.4	1.6	1.9	-1.3	47.37
	634	0.3	0.4	1.6	1.9	-1.2	46.15
	633	0.3	0.7	1.6	2.1	-1.1	48.75

	NODE	Mxx	Myy	Mxy	Mmax	Mmin	ANGLE
	Cent	0.4	1.8	0.3	1.9	0.3	77.47
	625	0.3	1.4	0.3	1.5	0.2	76.46
	626	0.4	1.5	0.4	1.6	0.3	72.62
	634	0.4	2.1	0.4	2.1	0.3	77.88
	633	0.5	2.2	0.3	2.3	0.4	80.57

	NODE	Vxx	Vyy
	Cent	0.3	1.3
	625	0.5	1.5
	626	0.5	1.1
	634	0.1	1.1
	633	0.1	1.5

LC		NODE	Fxx	Fyy	Fxy	Fmax	Fmin	ANGLE
RC ENV~1	Max	Cent	0.4	1.3	1.1	1.9	0.2	-48.26

		625	0.3	1.4	1.1	1.9	0.2	62.85
		626	0.3	1.3	1.1	1.9	0.2	-49.66
		634	0.5	1.3	1.1	1.9	0.3	-48.98
		633	0.5	1.4	1.1	2.0	0.3	59.43
	Min	Cent	-1.2	0.0	-2.0	0.9	-2.3	-56.90
		625	-1.5	-0.1	-2.0	0.9	-2.4	-59.12
		626	-1.5	0.1	-2.0	0.8	-2.3	-68.87
		634	-0.9	0.1	-2.0	0.9	-2.2	-64.58
		633	-0.9	-0.1	-2.0	1.0	-2.3	-55.03

		NODE	Mxx	Myy	Mxy	Mmax	Mmin	ANGLE
	Max	Cent	2.2	-2.6	0.1	2.2	-2.8	0.95
		625	4.1	-2.7	0.2	4.1	-2.8	1.47
		626	0.5	-3.4	-0.0	0.5	-3.8	-0.33
		634	0.4	-2.5	0.0	0.4	-3.3	0.33
		633	3.7	-1.7	0.2	3.7	-1.9	1.95
	Min	Cent	-5.7	-7.4	-2.8	-4.2	-8.7	-35.79
		625	-3.2	-6.8	-2.7	-2.0	-7.7	-20.99
		626	-8.3	-7.6	-2.9	-5.7	-10.4	-51.68
		634	-8.6	-7.8	-2.9	-5.9	-10.3	-45.01
		633	-3.3	-7.3	-2.6	-2.4	-7.8	-22.78

		NODE	Vxx	Vyy
	Max	Cent	9.7	0.7
		625	10.0	1.1
		626	10.0	0.4
		634	9.3	0.4
		633	9.3	1.1
	Min	Cent	5.7	-1.9
		625	5.8	-2.0
		626	5.8	-1.8
		634	5.5	-1.8
		633	5.5	-2.0

LC		NODE	Fxx	Fyy	Fxy	Fmax	Fmin	ANGLE
RC ENV~2	Max	Cent	0.2	1.0	-0.4	1.3	-0.0	-64.64
		625	0.1	1.0	-0.4	1.3	-0.1	-67.32
		626	0.1	0.9	-0.4	1.2	-0.1	-66.17
		634	0.3	0.9	-0.4	1.3	0.0	-61.48
		633	0.3	1.0	-0.4	1.4	0.1	-62.96
	Min	Cent	-0.8	0.5	-0.9	0.8	-1.1	-67.69
		625	-1.0	0.6	-0.9	0.8	-1.3	-70.28
		626	-1.0	0.4	-0.9	0.7	-1.3	-68.78
		634	-0.6	0.4	-0.9	0.7	-1.0	-64.54
		633	-0.6	0.6	-0.9	0.8	-0.9	-66.52

		NODE	Mxx	Myy	Mxy	Mmax	Mmin	ANGLE
	Max	Cent	-1.0	-4.3	-0.9	-0.4	-4.7	-20.42
		625	1.3	-4.1	-0.9	1.6	-4.3	-12.58
		626	-2.9	-4.9	-1.0	-2.0	-5.4	-27.67
		634	-2.9	-4.5	-0.9	-2.1	-5.1	-29.29
		633	0.6	-3.9	-0.9	1.1	-4.1	-15.46
	Min	Cent	-3.9	-5.5	-2.0	-3.0	-6.3	-31.82
		625	-1.8	-5.0	-1.9	-1.2	-5.6	-18.66
		626	-5.9	-5.7	-2.1	-4.2	-7.5	-48.08
		634	-6.0	-5.8	-2.0	-4.3	-7.4	-41.78
		633	-2.0	-5.4	-1.8	-1.5	-5.7	-20.17

		NODE	Vxx	Vyy
	Max	Cent	7.2	0.2
		625	7.5	0.4
		626	7.5	0.0
		634	6.9	0.0
		633	6.9	0.4
	Min	Cent	6.1	-0.8
		625	6.3	-0.7
		626	6.3	-0.9
		634	5.8	-0.9
		633	5.8	-0.7

ELEM	MAT	SEC	LC		NODE	Fxx	Fyy	Fxy	Fmax	Fmin	ANGLE

```
596      1      1       SX (RS)   Cent        0.6        0.3        0.7        1.2       -0.3      39.31
                                   626        0.7        0.4        0.7        1.3       -0.2      38.30
                                   627        0.7        0.3        0.7        1.3       -0.3      36.27
                                   635        0.5        0.3        0.7        1.1       -0.3      39.39
                                   634        0.5        0.4        0.7        1.2       -0.3      41.53

                                  NODE        Mxx        Myy        Mxy       Mmax       Mmin      ANGLE
                             ---- ------ ---------- ---------- ---------- ---------- ---------- ----------
                                  Cent        3.5        0.4        0.8        3.7        0.2      13.94
                                   626        3.8        0.4        0.9        4.0        0.2      14.03
                                   627        3.3        0.5        0.8        3.5        0.3      14.27
                                   635        3.2        0.4        0.8        3.4        0.2      13.95
                                   634        3.7        0.4        0.9        3.9        0.1      13.95

                                  NODE        Vxx        Vyy
                             ---- ------ ---------- ----------
                                  Cent        0.9        0.5
                                   626        1.0        0.5
                                   627        1.0        0.6
                                   635        0.8        0.6
                                   634        0.8        0.5


                       LC         NODE        Fxx        Fyy        Fxy       Fmax       Fmin      ANGLE
                -------- ---- ------ ---------- ---------- ---------- ---------- ---------- ----------
                       SY (RS)   Cent        0.3        0.3        1.6        1.9       -1.3      45.38
                                   626        0.3        0.4        1.6        2.0       -1.3      46.19
                                   627        0.3        0.2        1.6        1.9       -1.4      44.24
                                   635        0.3        0.2        1.6        1.9       -1.4      44.18
                                   634        0.3        0.4        1.6        2.0       -1.3      46.13

                                  NODE        Mxx        Myy        Mxy       Mmax       Mmin      ANGLE
                             ---- ------ ---------- ---------- ---------- ---------- ---------- ----------
                                  Cent        0.5        1.8        0.4        1.9        0.4      72.73
                                   626        0.5        1.5        0.4        1.7        0.3      70.79
                                   627        0.6        1.6        0.4        1.8        0.4      68.71
                                   635        0.5        2.0        0.5        2.1        0.4      73.84
                                   634        0.5        2.1        0.4        2.2        0.4      75.81

                                  NODE        Vxx        Vyy
                             ---- ------ ---------- ----------
                                  Cent        0.2        0.9
                                   626        0.3        1.1
                                   627        0.3        0.8
                                   635        0.1        0.8
                                   634        0.1        1.1


                       LC         NODE        Fxx        Fyy        Fxy       Fmax       Fmin      ANGLE
                -------- ---- ------ ---------- ---------- ---------- ---------- ---------- ----------
                RC ENV~1  Max   Cent        0.5        1.2        1.1        2.0        0.2     -50.12
                                   626        0.4        1.3        1.1        1.8        0.2     -50.48
                                   627        0.4        1.1        1.1        1.9        0.2     -51.57
                                   635        0.6        1.1        1.1        2.0        0.2     -50.06
                                   634        0.6        1.3        1.1        1.9        0.3     -48.95
                             Min   Cent       -1.3        0.2       -2.1        0.8       -2.3     -67.54
                                   626       -1.5        0.1       -2.1        0.8       -2.4     -69.40
                                   627       -1.5        0.2       -2.1        0.8       -2.3     -69.33
                                   635       -1.0        0.2       -2.1        0.9       -2.2     -65.40
                                   634       -1.0        0.1       -2.1        0.9       -2.3     -65.49

                                  NODE        Mxx        Myy        Mxy       Mmax       Mmin      ANGLE
                             ---- ------ ---------- ---------- ---------- ---------- ---------- ----------
                             Max   Cent       -1.0       -3.1       -0.2       -1.0       -4.3      -2.99
                                   626        0.5       -3.4       -0.2        0.5       -3.8      -1.82
                                   627       -2.6       -3.8       -0.2       -2.6       -5.0      -5.13
                                   635       -2.3       -2.9       -0.2       -2.3       -4.4      -5.38
                                   634        0.4       -2.4       -0.1        0.4       -3.2      -1.78
                             Min   Cent      -10.5       -7.9       -3.1       -6.6      -12.0     -57.79
                                   626       -8.6       -7.7       -3.1       -5.8      -10.7     -52.62
                                   627      -12.4       -8.1       -3.2       -7.2      -13.6     -66.11
                                   635      -12.2       -7.9       -3.0       -7.0      -13.3     -67.63
                                   634       -8.7       -7.9       -3.0       -5.9      -10.6     -46.45

                                  NODE        Vxx        Vyy
                             ---- ------ ---------- ----------
                             Max   Cent        7.3        0.1
                                   626        7.7        0.4
                                   627        7.7       -0.1
```

		635	6.9	-0.1
		634	6.9	0.4
	Min	Cent	3.4	-1.8
		626	3.5	-1.8
		627	3.5	-1.7
		635	3.2	-1.7
		634	3.2	-1.8

LC		NODE	Fxx	Fyy	Fxy	Fmax	Fmin	ANGLE
RC ENV~2	Max	Cent	0.3	0.9	-0.4	1.2	0.0	-63.41
		626	0.2	0.9	-0.4	1.2	-0.0	-66.23
		627	0.2	0.8	-0.4	1.2	-0.1	-65.20
		635	0.4	0.8	-0.4	1.2	0.1	-60.12
		634	0.4	0.9	-0.4	1.3	0.1	-61.45
	Min	Cent	-0.9	0.4	-0.8	0.7	-1.2	-67.39
		626	-1.1	0.4	-0.8	0.6	-1.4	-69.29
		627	-1.1	0.4	-0.8	0.6	-1.4	-69.14
		635	-0.7	0.4	-0.8	0.7	-1.0	-65.20
		634	-0.7	0.4	-0.8	0.7	-1.0	-65.39

		NODE	Mxx	Myy	Mxy	Mmax	Mmin	ANGLE
	Max	Cent	-4.3	-4.9	-0.9	-3.1	-5.7	-38.71
		626	-3.0	-4.9	-1.0	-2.0	-5.4	-29.28
		627	-5.7	-5.4	-0.9	-4.0	-6.6	-48.52
		635	-5.3	-4.8	-0.9	-3.8	-6.1	-49.94
		634	-3.0	-4.5	-0.9	-2.1	-5.1	-30.05
	Min	Cent	-7.5	-5.9	-2.1	-4.9	-8.6	-55.65
		626	-6.0	-5.8	-2.2	-4.3	-7.7	-49.11
		627	-8.9	-6.1	-2.2	-5.5	-9.8	-65.10
		635	-8.8	-5.9	-2.1	-5.2	-9.5	-66.70
		634	-6.1	-5.8	-2.0	-4.3	-7.5	-43.31

		NODE	Vxx	Vyy
	Max	Cent	5.4	-0.1
		626	5.7	0.0
		627	5.7	-0.2
		635	5.1	-0.2
		634	5.1	0.0
	Min	Cent	4.1	-1.0
		626	4.3	-0.9
		627	4.3	-1.1
		635	3.9	-1.1
		634	3.9	-0.9

ELEM	MAT	SEC	LC		NODE	Fxx	Fyy	Fxy	Fmax	Fmin	ANGLE
597	1	1	SX (RS)		Cent	0.7	0.2	0.8	1.2	-0.3	36.80
					627	0.8	0.3	0.8	1.3	-0.3	35.12
					628	0.8	0.2	0.8	1.3	-0.3	33.90
					636	0.6	0.2	0.8	1.2	-0.4	37.80
					635	0.6	0.3	0.8	1.2	-0.4	39.13

		NODE	Mxx	Myy	Mxy	Mmax	Mmin	ANGLE
		Cent	2.8	0.4	0.6	2.9	0.3	13.74
		627	3.2	0.4	0.7	3.4	0.3	13.39
		628	2.4	0.5	0.6	2.6	0.3	15.88
		636	2.4	0.5	0.5	2.5	0.3	14.58
		635	3.1	0.4	0.6	3.3	0.2	12.30

		NODE	Vxx	Vyy
		Cent	1.5	0.6
		627	1.6	0.6
		628	1.6	0.6
		636	1.5	0.6
		635	1.5	0.6

LC		NODE	Fxx	Fyy	Fxy	Fmax	Fmin	ANGLE
SY (RS)		Cent	0.3	0.2	1.4	1.7	-1.2	43.74
		627	0.4	0.2	1.4	1.8	-1.1	42.94
		628	0.4	0.3	1.4	1.8	-1.1	43.44

636	0.3	0.3	1.4	1.7	-1.2	44.32
635	0.3	0.2	1.4	1.7	-1.2	43.81

NODE	Mxx	Myy	Mxy	Mmax	Mmin	ANGLE
Cent	0.6	1.8	0.5	2.0	0.4	70.93
627	0.6	1.6	0.5	1.8	0.4	68.66
628	0.6	1.6	0.4	1.8	0.5	69.16
636	0.6	2.0	0.5	2.1	0.4	72.62
635	0.6	2.0	0.5	2.1	0.4	72.38

NODE	Vxx	Vyy
Cent	0.1	0.7
627	0.1	0.8
628	0.1	0.7
636	0.1	0.7
635	0.1	0.8

LC		NODE	Fxx	Fyy	Fxy	Fmax	Fmin	ANGLE
RC ENV~1	Max	Cent	0.5	1.1	1.1	1.7	0.2	-52.08
		627	0.4	1.1	1.1	1.6	0.1	-53.70
		628	0.4	1.1	1.1	1.6	0.1	-53.45
		636	0.7	1.1	1.1	1.7	0.2	-50.59
		635	0.7	1.1	1.1	1.8	0.3	-50.86
	Min	Cent	-1.4	0.3	-1.8	0.8	-2.1	-71.87
		627	-1.8	0.2	-1.8	0.7	-2.2	-73.28
		628	-1.8	0.2	-1.8	0.8	-2.2	-72.06
		636	-1.0	0.2	-1.8	0.9	-2.0	-70.24
		635	-1.0	0.2	-1.8	0.7	-2.0	-68.65

	NODE	Mxx	Myy	Mxy	Mmax	Mmin	ANGLE
Max	Cent	-3.6	-3.5	-0.1	-3.4	-4.9	-82.93
	627	-2.8	-3.8	-0.1	-2.8	-5.0	-3.59
	628	-4.8	-4.1	-0.1	-4.1	-5.3	-85.16
	636	-4.3	-3.1	-0.1	-3.1	-4.6	-86.33
	635	-2.4	-2.9	-0.2	-2.4	-4.5	-6.21
Min	Cent	-13.2	-8.1	-3.0	-7.5	-14.2	-71.40
	627	-12.6	-8.1	-3.1	-7.4	-13.7	-68.28
	628	-14.2	-8.4	-3.0	-8.0	-15.1	-74.26
	636	-13.8	-8.0	-2.9	-7.5	-14.6	-74.02
	635	-12.3	-7.9	-3.0	-7.1	-13.4	-68.36

	NODE	Vxx	Vyy
Max	Cent	3.9	-0.3
	627	4.2	-0.1
	628	4.2	-0.4
	636	3.7	-0.4
	635	3.7	-0.1
Min	Cent	0.6	-1.8
	627	0.7	-1.7
	628	0.7	-1.8
	636	0.5	-1.8
	635	0.5	-1.7

LC		NODE	Fxx	Fyy	Fxy	Fmax	Fmin	ANGLE
RC ENV~2	Max	Cent	0.3	0.8	-0.3	1.1	0.1	-65.80
		627	0.2	0.8	-0.3	1.0	0.0	-68.86
		628	0.2	0.8	-0.3	1.0	-0.0	-73.00
		636	0.4	0.8	-0.3	1.1	0.1	-62.03
		635	0.4	0.8	-0.3	1.1	0.2	-62.20
	Min	Cent	-1.0	0.5	-0.7	0.6	-1.2	-71.63
		627	-1.2	0.4	-0.7	0.5	-1.4	-73.10
		628	-1.2	0.5	-0.7	0.6	-1.4	-70.77
		636	-0.7	0.5	-0.7	0.7	-0.9	-66.95
		635	-0.7	0.4	-0.7	0.6	-1.0	-68.44

	NODE	Mxx	Myy	Mxy	Mmax	Mmin	ANGLE
Max	Cent	-6.2	-5.3	-0.7	-4.5	-6.7	-56.69
	627	-5.8	-5.4	-0.7	-4.2	-6.5	-49.93
	628	-7.2	-5.8	-0.6	-5.1	-7.5	-61.86
	636	-6.6	-5.0	-0.6	-4.6	-6.8	-62.87

635	-5.4	-4.8	-0.8	-4.0	-6.0	-51.15
Min Cent	-9.5	-6.1	-2.0	-5.7	-10.2	-71.11
627	-9.1	-6.1	-2.1	-5.6	-9.9	-67.50
628	-10.3	-6.3	-2.0	-6.1	-10.9	-74.36
636	-9.9	-6.0	-1.9	-5.7	-10.5	-74.10
635	-8.8	-5.9	-2.0	-5.3	-9.6	-67.62

	NODE	Vxx	Vyy
Max	Cent	2.9	-0.3
	627	3.1	-0.2
	628	3.1	-0.4
	636	2.7	-0.4
	635	2.7	-0.2
Min	Cent	1.6	-1.1
	627	1.7	-1.1
	628	1.7	-1.2
	636	1.6	-1.2
	635	1.6	-1.1

ELEM	MAT	SEC	LC	NODE	Fxx	Fyy	Fxy	Fmax	Fmin	ANGLE
598	1	1	SX (RS)	Cent	0.6	0.2	0.7	1.2	-0.4	38.48
				628	0.7	0.2	0.7	1.2	-0.3	35.14
				629	0.7	0.3	0.7	1.3	-0.3	36.56
				637	0.5	0.3	0.7	1.1	-0.4	41.16
				636	0.5	0.2	0.7	1.1	-0.4	39.63

NODE	Mxx	Myy	Mxy	Mmax	Mmin	ANGLE
Cent	1.9	0.4	0.4	2.1	0.3	15.48
628	2.3	0.5	0.5	2.5	0.3	14.85
629	1.7	0.5	0.5	1.9	0.3	18.00
637	1.5	0.6	0.4	1.6	0.5	18.22
636	2.3	0.4	0.4	2.4	0.3	12.90

NODE	Vxx	Vyy
Cent	1.7	0.6
628	1.7	0.6
629	1.7	0.7
637	1.6	0.7
636	1.6	0.6

LC	NODE	Fxx	Fyy	Fxy	Fmax	Fmin	ANGLE
SY (RS)	Cent	0.4	0.3	1.4	1.8	-1.1	44.54
	628	0.5	0.3	1.4	1.8	-1.1	43.10
	629	0.5	0.4	1.4	1.9	-1.0	44.55
	637	0.5	0.4	1.4	1.9	-1.0	44.64
	636	0.5	0.3	1.4	1.8	-1.1	43.20

NODE	Mxx	Myy	Mxy	Mmax	Mmin	ANGLE
Cent	0.6	1.8	0.4	1.9	0.5	74.21
628	0.6	1.6	0.4	1.8	0.5	70.93
629	0.6	1.6	0.3	1.7	0.5	74.22
637	0.6	2.1	0.4	2.2	0.5	77.03
636	0.6	2.0	0.4	2.1	0.5	73.23

NODE	Vxx	Vyy
Cent	0.2	0.8
628	0.2	0.7
629	0.2	1.0
637	0.2	1.0
636	0.2	0.7

LC	NODE	Fxx	Fyy	Fxy	Fmax	Fmin	ANGLE
RC ENV~1 Max	Cent	0.4	1.2	1.2	1.7	0.2	54.43
	628	0.3	1.1	1.2	1.6	0.2	53.94
	629	0.3	1.4	1.2	1.8	0.2	56.14
	637	0.6	1.4	1.2	1.9	0.3	53.48
	636	0.6	1.1	1.2	1.7	0.3	51.15
Min	Cent	-1.4	0.2	-1.7	0.8	-2.0	-71.84

628	-1.7	0.2	-1.7	0.7	-2.1	-73.70
629	-1.7	0.1	-1.7	0.8	-2.1	-58.84
637	-1.1	0.1	-1.7	0.8	-2.0	-58.08
636	-1.1	0.2	-1.7	0.8	-1.9	-73.42

	NODE	Mxx	Myy	Mxy	Mmax	Mmin	ANGLE
Max	Cent	-5.0	-3.7	0.1	-3.7	-5.1	89.66
	628	-4.9	-4.1	0.1	-4.1	-5.3	-89.37
	629	-5.5	-4.4	0.2	-4.4	-5.8	87.30
	637	-5.1	-3.2	0.1	-3.2	-5.1	88.70
	636	-4.3	-3.1	-0.1	-3.1	-4.6	-88.63
Min	Cent	-13.5	-8.3	-2.7	-8.0	-14.3	-76.12
	628	-14.2	-8.4	-2.8	-8.1	-14.9	-77.23
	629	-13.4	-8.5	-2.6	-8.3	-14.1	-77.40
	637	-12.9	-8.2	-2.6	-7.9	-13.7	-74.45
	636	-13.7	-8.0	-2.8	-7.6	-14.5	-75.13

	NODE	Vxx	Vyy
Max	Cent	1.6	-0.3
	628	1.7	-0.4
	629	1.7	-0.1
	637	1.6	-0.1
	636	1.6	-0.4
Min	Cent	-1.7	-1.9
	628	-1.7	-1.8
	629	-1.7	-2.1
	637	-1.6	-2.1
	636	-1.6	-1.8

LC		NODE	Fxx	Fyy	Fxy	Fmax	Fmin	ANGLE
RC ENV~2	Max	Cent	0.2	0.9	-0.2	1.0	0.1	-77.56
		628	0.1	0.8	-0.2	0.9	0.0	-78.56
		629	0.1	1.0	-0.2	1.1	0.0	-79.29
		637	0.3	1.0	-0.2	1.1	0.2	-76.39
		636	0.3	0.8	-0.2	0.9	0.2	-75.24
	Min	Cent	-1.0	0.5	-0.4	0.6	-1.0	-74.23
		628	-1.2	0.5	-0.4	0.5	-1.3	-75.73
		629	-1.2	0.5	-0.4	0.6	-1.3	-64.10
		637	-0.7	0.5	-0.4	0.6	-0.8	-72.42
		636	-0.7	0.5	-0.4	0.6	-0.8	-71.26

	NODE	Mxx	Myy	Mxy	Mmax	Mmin	ANGLE
Max	Cent	-6.8	-5.5	-0.3	-5.0	-6.9	-66.49
	628	-7.1	-5.7	-0.3	-5.2	-7.2	-65.73
	629	-7.2	-6.0	-0.1	-5.3	-7.3	-66.87
	637	-6.6	-5.3	-0.2	-4.8	-6.7	-67.18
	636	-6.5	-5.0	-0.4	-4.7	-6.7	-64.34
Min	Cent	-9.8	-6.2	-1.8	-6.1	-10.3	-76.86
	628	-10.3	-6.3	-1.8	-6.2	-10.8	-77.77
	629	-9.8	-6.5	-1.7	-6.4	-10.2	-78.63
	637	-9.4	-6.2	-1.7	-6.0	-9.8	-75.45
	636	-9.8	-5.9	-1.8	-5.7	-10.4	-75.51

	NODE	Vxx	Vyy
Max	Cent	0.3	-0.3
	628	0.3	-0.4
	629	0.3	-0.3
	637	0.3	-0.3
	636	0.3	-0.4
Min	Cent	-1.0	-1.1
	628	-1.0	-1.2
	629	-1.0	-1.1
	637	-1.0	-1.1
	636	-1.0	-1.2

ELEM	MAT	SEC	LC		NODE	Fxx	Fyy	Fxy	Fmax	Fmin	ANGLE
599	1	1	SX (RS)		Cent	0.4	0.3	0.8	1.1	-0.4	42.30
					629	0.5	0.3	0.8	1.2	-0.4	40.24
					630	0.5	0.3	0.8	1.2	-0.3	41.13
					638	0.4	0.3	0.8	1.1	-0.4	43.88
					637	0.4	0.3	0.8	1.1	-0.4	42.98

	NODE	Mxx	Myy	Mxy	Mmax	Mmin	ANGLE
	Cent	1.4	0.5	0.3	1.5	0.4	18.08
	629	1.7	0.5	0.4	1.8	0.4	15.09
	630	1.5	0.5	0.4	1.6	0.4	17.68
	638	1.0	0.6	0.3	1.2	0.5	30.87
	637	1.4	0.5	0.3	1.5	0.5	16.50

	NODE	Vxx	Vyy
	Cent	1.4	0.6
	629	1.4	0.7
	630	1.4	0.5
	638	1.3	0.5
	637	1.3	0.7

LC		NODE	Fxx	Fyy	Fxy	Fmax	Fmin	ANGLE
SY (RS)		Cent	0.4	0.5	1.5	2.0	-1.0	45.35
		629	0.4	0.4	1.5	1.9	-1.1	45.08
		630	0.4	0.5	1.5	2.0	-1.0	45.97
		638	0.5	0.5	1.5	2.0	-1.0	44.99
		637	0.5	0.4	1.5	2.0	-1.0	44.09

	NODE	Mxx	Myy	Mxy	Mmax	Mmin	ANGLE
	Cent	0.6	1.9	0.2	1.9	0.6	80.52
	629	0.6	1.6	0.2	1.7	0.5	77.69
	630	0.5	1.5	0.2	1.6	0.5	77.75
	638	0.6	2.3	0.2	2.4	0.6	82.70
	637	0.7	2.1	0.3	2.1	0.6	79.58

	NODE	Vxx	Vyy
	Cent	0.3	1.3
	629	0.5	1.0
	630	0.5	1.6
	638	0.2	1.6
	637	0.2	1.0

LC		NODE	Fxx	Fyy	Fxy	Fmax	Fmin	ANGLE
RC ENV~1	Max	Cent	0.3	1.5	1.4	2.0	0.2	55.06
		629	0.2	1.3	1.4	1.9	0.1	55.27
		630	0.2	1.6	1.4	2.1	0.2	57.07
		638	0.4	1.6	1.4	2.2	0.3	54.25
		637	0.4	1.3	1.4	2.0	0.3	52.31
	Min	Cent	-1.4	0.1	-1.6	0.7	-2.0	-67.84
		629	-1.6	0.1	-1.6	0.6	-2.1	-69.82
		630	-1.6	0.1	-1.6	0.7	-2.1	-73.36
		638	-1.1	0.1	-1.6	0.8	-2.0	-65.53
		637	-1.1	0.1	-1.6	0.7	-2.0	-58.83

	NODE	Mxx	Myy	Mxy	Mmax	Mmin	ANGLE
Max	Cent	-4.9	-3.8	0.4	-3.8	-5.5	81.14
	629	-5.4	-4.3	0.4	-4.3	-5.8	82.71
	630	-4.6	-4.5	0.6	-4.3	-5.7	24.61
	638	-4.5	-3.2	0.4	-3.1	-4.9	79.79
	637	-5.0	-3.2	0.2	-3.2	-5.1	86.52
Min	Cent	-11.5	-8.4	-2.4	-8.2	-12.4	-72.70
	629	-13.2	-8.5	-2.4	-8.4	-13.9	-81.35
	630	-10.3	-8.5	-2.2	-8.3	-11.5	-56.90
	638	-10.0	-8.6	-2.3	-7.9	-11.2	-44.36
	637	-12.7	-8.1	-2.5	-7.9	-13.4	-75.43

	NODE	Vxx	Vyy
Max	Cent	-0.5	0.3
	629	-0.6	-0.1
	630	-0.6	0.8
	638	-0.4	0.8
	637	-0.4	-0.1
Min	Cent	-5.3	-2.3
	629	-5.6	-2.1
	630	-5.6	-2.5

		638	-5.1	-2.5
		637	-5.1	-2.1

LC		NODE	Fxx	Fyy	Fxy	Fmax	Fmin	ANGLE
RC ENV~2	Max	Cent	0.1	1.1	-0.1	1.1	0.1	-84.59
		629	0.1	1.0	-0.1	1.0	0.0	-84.85
		630	0.1	1.2	-0.1	1.2	0.0	-85.31
		638	0.2	1.2	-0.1	1.2	0.2	-84.30
		637	0.2	1.0	-0.1	1.0	0.2	-83.60
	Min	Cent	-1.0	0.5	-0.2	0.5	-1.0	-72.96
		629	-1.2	0.5	-0.2	0.5	-1.2	-74.31
		630	-1.2	0.5	-0.2	0.6	-1.2	-76.77
		638	-0.8	0.5	-0.2	0.6	-0.8	-71.39
		637	-0.8	0.5	-0.2	0.5	-0.8	-66.72

		NODE	Mxx	Myy	Mxy	Mmax	Mmin	ANGLE
	Max	Cent	-6.2	-5.7	0.2	-5.0	-6.2	-65.26
		629	-7.0	-5.9	0.2	-5.4	-7.0	-68.43
		630	-5.9	-5.8	0.4	-5.0	-6.3	-61.40
		638	-5.5	-5.5	0.2	-4.7	-5.6	-60.97
		637	-6.4	-5.2	-0.0	-4.9	-6.4	-67.97
	Min	Cent	-8.4	-6.4	-1.5	-6.3	-8.9	-75.84
		629	-9.6	-6.4	-1.5	-6.4	-10.0	-83.56
		630	-7.6	-6.5	-1.4	-6.4	-8.3	-56.84
		638	-7.3	-6.5	-1.4	-6.1	-8.1	-39.81
		637	-9.1	-6.1	-1.6	-6.0	-9.6	-77.05

		NODE	Vxx	Vyy
	Max	Cent	-1.8	-0.1
		629	-1.9	-0.3
		630	-1.9	0.2
		638	-1.6	0.2
		637	-1.6	-0.3
	Min	Cent	-3.7	-1.0
		629	-3.9	-1.1
		630	-3.9	-0.9
		638	-3.5	-0.9
		637	-3.5	-1.1

ELEM	MAT	SEC	LC		NODE	Fxx	Fyy	Fxy	Fmax	Fmin	ANGLE
600	1	1	SX (RS)		Cent	0.3	0.3	0.8	1.1	-0.5	45.64
					630	0.3	0.3	0.8	1.1	-0.4	44.64
					631	0.3	0.3	0.8	1.1	-0.5	43.55
					639	0.2	0.3	0.8	1.0	-0.5	46.12
					638	0.2	0.3	0.8	1.0	-0.5	47.21

		NODE	Mxx	Myy	Mxy	Mmax	Mmin	ANGLE
		Cent	1.0	0.4	0.5	1.3	0.1	29.95
		630	1.5	0.5	0.5	1.7	0.3	20.43
		631	1.2	0.3	0.6	1.5	-0.0	27.61
		639	0.7	0.5	0.6	1.2	-0.1	40.00
		638	0.9	0.6	0.4	1.3	0.3	35.65

		NODE	Vxx	Vyy
		Cent	0.9	0.5
		630	0.9	0.5
		631	0.9	0.4
		639	0.8	0.4
		638	0.8	0.5

LC		NODE	Fxx	Fyy	Fxy	Fmax	Fmin	ANGLE
SY (RS)		Cent	0.5	0.6	1.3	1.8	-0.8	45.81
		630	0.4	0.5	1.3	1.7	-0.8	46.77
		631	0.4	0.6	1.3	1.8	-0.8	47.18
		639	0.6	0.6	1.3	1.9	-0.7	44.77
		638	0.6	0.5	1.3	1.8	-0.7	44.36

		NODE	Mxx	Myy	Mxy	Mmax	Mmin	ANGLE

Cent	0.7	2.0	0.3	2.0	0.6	78.06
630	0.6	1.5	0.3	1.6	0.5	74.13
631	0.8	1.4	0.3	1.5	0.7	67.07
639	0.7	2.7	0.2	2.7	0.6	83.02
638	0.7	2.3	0.3	2.4	0.7	81.10

NODE	Vxx	Vyy
Cent	0.4	2.0
630	0.9	1.6
631	0.9	2.3
639	0.2	2.3
638	0.2	1.6

LC		NODE	Fxx	Fyy	Fxy	Fmax	Fmin	ANGLE
RC ENV~1	Max	Cent	0.1	1.8	1.2	2.0	0.1	57.89
		630	0.0	1.6	1.2	1.9	0.0	58.89
		631	0.0	1.9	1.2	2.1	0.0	60.27
		639	0.3	1.9	1.2	2.2	0.2	56.79
		638	0.3	1.6	1.2	2.1	0.2	55.23
	Min	Cent	-1.4	0.2	-1.3	0.7	-1.8	-81.94
		630	-1.6	0.1	-1.3	0.7	-1.8	-81.88
		631	-1.6	0.2	-1.3	0.8	-1.8	-83.63
		639	-1.2	0.2	-1.3	0.8	-1.8	-82.00
		638	-1.2	0.1	-1.3	0.7	-1.8	-79.08

	NODE	Mxx	Myy	Mxy	Mmax	Mmin	ANGLE
Max	Cent	-3.7	-3.8	1.0	-3.2	-4.7	51.45
	630	-4.3	-4.5	0.9	-3.9	-5.7	26.83
	631	-2.9	-4.5	1.2	-2.5	-4.9	20.58
	639	-3.2	-2.9	1.0	-2.4	-3.7	51.11
	638	-4.3	-3.2	0.7	-3.0	-4.7	70.85
Min	Cent	-7.9	-8.3	-2.1	-6.4	-9.5	-22.61
	630	-10.2	-8.4	-2.1	-8.1	-11.4	-40.62
	631	-5.8	-8.0	-2.1	-5.2	-8.2	-5.77
	639	-5.7	-8.5	-2.1	-5.0	-8.6	-25.14
	638	-9.9	-8.5	-2.1	-7.7	-11.0	-33.19

	NODE	Vxx	Vyy
Max	Cent	-1.9	1.3
	630	-2.1	0.8
	631	-2.1	1.9
	639	-1.7	1.9
	638	-1.7	0.8
Min	Cent	-8.2	-2.7
	630	-8.6	-2.5
	631	-8.6	-2.8
	639	-7.8	-2.8
	638	-7.8	-2.5

LC		NODE	Fxx	Fyy	Fxy	Fmax	Fmin	ANGLE
RC ENV~2	Max	Cent	0.0	1.3	-0.0	1.3	-0.0	-88.92
		630	-0.1	1.2	-0.0	1.2	-0.1	-88.95
		631	-0.1	1.4	-0.0	1.4	-0.1	-89.03
		639	0.1	1.4	-0.0	1.4	0.1	-88.88
		638	0.1	1.2	-0.0	1.2	0.1	-88.77
	Min	Cent	-1.0	0.6	-0.1	0.6	-1.0	-83.79
		630	-1.2	0.5	-0.1	0.5	-1.2	-83.79
		631	-1.2	0.7	-0.1	0.7	-1.2	-84.95
		639	-0.8	0.7	-0.1	0.7	-0.8	-83.80
		638	-0.8	0.5	-0.1	0.5	-0.8	-81.97

	NODE	Mxx	Myy	Mxy	Mmax	Mmin	ANGLE
Max	Cent	-4.6	-5.3	0.5	-4.3	-5.6	-50.55
	630	-5.7	-5.8	0.5	-5.1	-6.3	-61.99
	631	-3.1	-5.1	0.6	-3.1	-5.6	0.10
	639	-3.3	-5.0	0.5	-3.3	-5.4	-3.25
	638	-5.2	-5.4	0.4	-4.7	-5.7	-61.60
Min	Cent	-5.8	-6.3	-1.2	-5.1	-6.9	-3.73
	630	-7.5	-6.4	-1.3	-6.2	-8.2	-4.99
	631	-4.4	-6.1	-1.2	-4.2	-6.2	2.03
	639	-4.3	-6.5	-1.2	-4.0	-6.5	-1.35

		638	-7.2	-6.4	-1.3	-5.9	-7.8	-21.74

	NODE	Vxx	Vyy
Max	Cent	-2.8	0.4
	630	-3.0	0.2
	631	-3.0	0.6
	639	-2.5	0.6
	638	-2.5	0.2
Min	Cent	-5.7	-0.7
	630	-6.0	-0.9
	631	-6.0	-0.5
	639	-5.4	-0.5
	638	-5.4	-0.9

ELEM	MAT	SEC	LC		NODE	Fxx	Fyy	Fxy	Fmax	Fmin	ANGLE
601	1	1	SX (RS)		Cent	0.1	0.1	0.8	0.9	-0.7	45.29
					631	0.1	0.3	0.8	1.0	-0.6	47.84
					632	0.1	0.0	0.8	0.9	-0.7	43.74
					640	0.1	0.0	0.8	0.9	-0.7	43.48
					639	0.1	0.3	0.8	1.0	-0.6	47.58

	NODE	Mxx	Myy	Mxy	Mmax	Mmin	ANGLE
	Cent	0.4	0.2	0.8	1.1	-0.6	41.64
	631	1.0	0.3	0.9	1.6	-0.3	33.69
	632	0.1	0.0	0.9	1.0	-0.8	43.34
	640	0.1	0.0	0.8	0.9	-0.7	42.87
	639	0.5	0.5	0.8	1.2	-0.3	44.81

	NODE	Vxx	Vyy
	Cent	1.4	0.2
	631	2.1	0.4
	632	2.1	0.0
	640	0.8	0.0
	639	0.8	0.4

LC		NODE	Fxx	Fyy	Fxy	Fmax	Fmin	ANGLE
SY (RS)		Cent	0.5	0.6	0.5	1.1	0.0	47.25
		631	0.4	0.6	0.5	1.0	-0.0	49.71
		632	0.4	0.6	0.5	1.0	-0.0	50.05
		640	0.7	0.6	0.5	1.2	0.1	43.03
		639	0.7	0.6	0.5	1.2	0.1	42.68

	NODE	Mxx	Myy	Mxy	Mmax	Mmin	ANGLE
	Cent	0.8	2.0	0.2	2.1	0.8	82.82
	631	0.8	1.4	0.2	1.5	0.7	72.02
	632	1.1	1.4	0.1	1.4	1.0	71.71
	640	0.7	2.8	0.1	2.8	0.7	87.81
	639	0.7	2.6	0.2	2.7	0.7	84.18

	NODE	Vxx	Vyy
	Cent	0.2	2.5
	631	0.5	2.3
	632	0.5	2.7
	640	0.2	2.7
	639	0.2	2.3

LC		NODE	Fxx	Fyy	Fxy	Fmax	Fmin	ANGLE
RC ENV~1	Max	Cent	0.0	2.0	0.8	2.0	-0.1	89.74
		631	-0.1	1.9	0.8	1.9	-0.1	89.75
		632	-0.1	2.0	0.8	2.0	-0.1	89.76
		640	0.3	2.0	0.8	2.0	0.1	89.73
		639	0.3	1.9	0.8	1.9	0.0	89.72
	Min	Cent	-1.4	0.2	-0.8	0.4	-1.4	-68.84
		631	-1.6	0.2	-0.8	0.4	-1.6	-68.09
		632	-1.6	0.2	-0.8	0.4	-1.6	-68.67
		640	-1.2	0.2	-0.8	0.4	-1.3	-70.26
		639	-1.2	0.2	-0.8	0.4	-1.3	-69.75

	NODE	Mxx	Myy	Mxy	Mmax	Mmin	ANGLE
Max	Cent	-1.6	-3.3	1.4	-1.3	-3.7	-21.97
	631	-3.1	-4.5	1.3	-2.5	-4.8	23.44
	632	1.3	-3.7	1.4	2.0	-3.8	-17.77
	640	0.7	-2.2	1.4	1.2	-2.7	-15.79
	639	-3.1	-2.9	1.4	-2.2	-3.9	47.88
Min	Cent	-3.9	-7.5	-2.1	-3.8	-7.6	6.63
	631	-6.0	-7.9	-2.2	-5.2	-8.5	-27.40
	632	-3.3	-6.4	-2.3	-3.2	-6.4	7.23
	640	-3.0	-7.8	-1.9	-2.9	-7.9	6.62
	639	-5.9	-8.5	-1.9	-5.3	-8.6	-21.75

	NODE	Vxx	Vyy
Max	Cent	-1.4	2.2
	631	-1.0	1.9
	632	-1.0	2.6
	640	-1.8	2.6
	639	-1.8	1.9
Min	Cent	-10.3	-2.8
	631	-10.6	-2.8
	632	-10.6	-2.8
	640	-9.9	-2.8
	639	-9.9	-2.8

LC		NODE	Fxx	Fyy	Fxy	Fmax	Fmin	ANGLE
RC ENV~2	Max	Cent	-0.1	1.4	0.0	1.4	-0.1	89.76
		631	-0.2	1.4	0.0	1.4	-0.2	89.77
		632	-0.2	1.4	0.0	1.4	-0.2	89.77
		640	-0.1	1.4	0.0	1.4	-0.1	89.75
		639	-0.1	1.4	0.0	1.4	-0.1	89.74
	Min	Cent	-1.0	0.7	-0.0	0.7	-1.0	-86.65
		631	-1.2	0.6	-0.0	0.6	-1.2	-86.59
		632	-1.2	0.8	-0.0	0.8	-1.2	-87.08
		640	-0.9	0.8	-0.0	0.8	-0.9	-86.70
		639	-0.9	0.6	-0.0	0.6	-0.9	-86.06

	NODE	Mxx	Myy	Mxy	Mmax	Mmin	ANGLE
Max	Cent	-1.5	-4.4	0.6	-1.5	-4.8	-18.35
	631	-3.1	-5.2	0.5	-3.0	-5.7	-5.97
	632	0.5	-3.6	0.5	0.8	-4.0	-15.06
	640	0.0	-3.6	0.7	0.3	-3.9	-12.95
	639	-3.3	-5.0	0.7	-3.3	-5.3	-3.49
Min	Cent	-3.1	-5.8	-1.2	-3.0	-5.8	13.95
	631	-4.5	-6.1	-1.3	-4.2	-6.2	-0.70
	632	-2.2	-5.2	-1.3	-2.1	-5.3	10.34
	640	-2.3	-5.6	-1.1	-2.1	-5.7	13.42
	639	-4.4	-6.5	-1.1	-4.1	-6.5	-10.15

	NODE	Vxx	Vyy
Max	Cent	-2.8	0.9
	631	-3.0	0.6
	632	-3.0	1.1
	640	-2.5	1.1
	639	-2.5	0.6
Min	Cent	-7.0	-0.3
	631	-7.3	-0.5
	632	-7.3	-0.1
	640	-6.7	-0.1
	639	-6.7	-0.5

ELEM	MAT	SEC	LC		NODE	Fxx	Fyy	Fxy	Fmax	Fmin	ANGLE
602	1	1	SX (RS)		Cent	0.7	0.5	0.9	1.5	-0.3	42.00
					186	0.3	0.6	0.9	1.4	-0.5	50.99
					633	0.3	0.4	0.9	1.2	-0.6	46.27
					641	1.1	0.4	0.9	1.7	-0.3	33.93
					189	1.1	0.6	0.9	1.8	-0.1	38.27

	NODE	Mxx	Myy	Mxy	Mmax	Mmin	ANGLE
	Cent	3.1	0.5	1.6	3.8	-0.3	25.81
	186	2.4	1.0	1.7	3.5	-0.2	33.70

633	3.2	0.3	1.4	3.7	-0.3	21.85
641	3.4	0.1	1.5	4.0	-0.5	21.32
189	3.3	0.7	1.9	4.2	-0.3	27.79

NODE	Vxx	Vyy
Cent	1.1	0.7
186	1.7	1.0
633	1.7	0.5
641	0.6	0.5
189	0.6	1.0

LC		NODE	Fxx	Fyy	Fxy	Fmax	Fmin	ANGLE
SY (RS)		Cent	0.4	1.3	1.1	2.1	-0.3	55.58
		186	0.2	1.6	1.1	2.2	-0.5	60.78
		633	0.2	1.1	1.1	1.8	-0.6	55.83
		641	0.7	1.1	1.1	2.0	-0.3	49.48
		189	0.7	1.6	1.1	2.3	-0.1	55.27

	NODE	Mxx	Myy	Mxy	Mmax	Mmin	ANGLE
	Cent	0.6	2.5	0.2	2.6	0.5	83.22
	186	0.4	2.1	0.2	2.2	0.3	82.97
	633	0.3	2.1	0.3	2.1	0.3	82.06
	641	0.7	2.9	0.3	3.0	0.7	83.02
	189	0.8	3.0	0.3	3.0	0.8	83.51

NODE	Vxx	Vyy
Cent	0.2	1.6
186	0.1	1.6
633	0.1	1.5
641	0.2	1.5
189	0.2	1.6

LC		NODE	Fxx	Fyy	Fxy	Fmax	Fmin	ANGLE
RC ENV~1	Max	Cent	0.5	2.2	0.8	2.5	0.3	70.01
		186	0.2	2.5	0.8	2.7	-0.1	74.08
		633	0.2	1.8	0.8	2.1	-0.1	69.86
		641	1.0	1.8	0.8	2.2	0.5	63.84
		189	1.0	2.5	0.8	2.8	0.7	70.13
	Min	Cent	-0.8	-0.4	-1.5	1.0	-2.0	-46.03
		186	-0.6	-0.6	-1.5	1.0	-1.9	-42.40
		633	-0.6	-0.3	-1.5	1.0	-1.8	-84.73
		641	-1.1	-0.3	-1.5	1.0	-2.0	-49.68
		189	-1.1	-0.6	-1.5	0.8	-2.2	-46.71

	NODE	Mxx	Myy	Mxy	Mmax	Mmin	ANGLE
Max	Cent	5.5	-0.0	0.7	5.6	-0.2	4.93
	186	7.0	-0.5	0.8	7.1	-0.6	-8.32
	633	3.3	-1.7	0.5	3.3	-1.9	3.77
	641	3.9	0.6	0.5	3.9	0.1	5.00
	189	8.0	1.6	0.9	8.1	1.5	5.90
Min	Cent	-0.6	-5.3	-2.6	0.7	-5.5	-12.81
	186	2.3	-5.3	-2.6	3.2	-5.4	-20.50
	633	-3.1	-7.0	-2.4	-2.4	-7.4	-20.97
	641	-3.0	-5.3	-2.5	-2.0	-5.7	-34.60
	189	1.5	-4.4	-2.8	3.0	-4.6	-28.89

NODE	Vxx	Vyy
Max Cent	11.8	-1.0
186	12.2	-0.8
633	12.2	-1.3
641	11.5	-1.3
189	11.5	-0.8
Min Cent	6.4	-4.1
186	6.0	-4.0
633	6.0	-4.3
641	6.8	-4.3
189	6.8	-4.0

LC	NODE	Fxx	Fyy	Fxy	Fmax	Fmin	ANGLE

RC ENV~2	Max	Cent	0.3	1.5	-0.1	1.6	-0.1	-65.03
		186	0.1	1.7	-0.1	1.8	-0.2	-78.60
		633	0.1	1.2	-0.1	1.5	-0.3	-66.50
		641	0.5	1.2	-0.1	1.6	0.0	-61.78
		189	0.5	1.7	-0.1	1.8	-0.0	-78.57
	Min	Cent	-0.5	0.7	-0.7	1.0	-0.6	-69.12
		186	-0.4	0.6	-0.7	1.0	-0.5	-61.71
		633	-0.4	0.7	-0.7	0.8	-0.5	-83.18
		641	-0.6	0.7	-0.7	0.8	-0.6	-84.12
		189	-0.6	0.6	-0.7	1.0	-0.6	-69.21

	NODE	Mxx	Myy	Mxy	Mmax	Mmin	ANGLE
Max	Cent	3.1	-2.5	-0.7	3.4	-2.7	-13.60
	186	5.2	-2.6	-0.6	5.4	-2.7	-7.91
	633	0.6	-3.8	-0.8	1.0	-4.0	-15.30
	641	0.9	-2.3	-0.7	1.5	-2.6	-20.11
	189	5.6	-1.4	-0.6	5.8	-1.5	-12.09
Min	Cent	0.6	-3.8	-1.7	0.9	-4.0	-11.81
	186	3.2	-3.9	-1.7	3.4	-4.0	-9.14
	633	-2.0	-5.1	-1.7	-1.5	-5.4	-18.57
	641	-1.9	-3.7	-1.8	-1.2	-4.1	-30.07
	189	2.9	-2.6	-1.8	3.1	-2.7	-7.84

	NODE	Vxx	Vyy
Max	Cent	8.8	-2.4
	186	9.1	-2.2
	633	9.1	-2.7
	641	8.6	-2.7
	189	8.6	-2.2
Min	Cent	7.5	-2.8
	186	7.6	-2.7
	633	7.6	-2.9
	641	7.3	-2.9
	189	7.3	-2.7

ELEM	MAT	SEC	LC		NODE	Fxx	Fyy	Fxy	Fmax	Fmin	ANGLE
603	1	1	SX	(RS)	Cent	0.6	0.3	0.9	1.4	-0.5	41.08
					633	0.5	0.4	0.9	1.4	-0.5	42.96
					634	0.5	0.3	0.9	1.4	-0.5	42.11
					642	0.7	0.3	0.9	1.5	-0.5	39.30
					641	0.7	0.4	0.9	1.5	-0.4	40.13

	NODE	Mxx	Myy	Mxy	Mmax	Mmin	ANGLE
	Cent	3.7	0.3	1.2	4.1	-0.1	16.89
	633	3.5	0.3	1.3	3.9	-0.1	19.67
	634	3.6	0.2	1.0	3.9	-0.1	15.57
	642	4.1	0.5	1.0	4.3	0.2	14.64
	641	3.7	0.1	1.2	4.1	-0.2	17.38

	NODE	Vxx	Vyy
	Cent	0.4	0.2
	633	0.4	0.5
	634	0.4	0.4
	642	0.5	0.4
	641	0.5	0.5

LC		NODE	Fxx	Fyy	Fxy	Fmax	Fmin	ANGLE
SY	(RS)	Cent	0.3	0.7	1.6	2.2	-1.1	48.53
		633	0.2	1.1	1.6	2.3	-1.0	52.73
		634	0.2	0.5	1.6	1.9	-1.3	47.37
		642	0.5	0.5	1.6	2.1	-1.1	44.59
		641	0.5	1.1	1.6	2.4	-0.8	50.09

	NODE	Mxx	Myy	Mxy	Mmax	Mmin	ANGLE
	Cent	0.5	2.4	0.4	2.5	0.4	79.73
	633	0.5	2.1	0.3	2.2	0.4	79.48
	634	0.4	2.1	0.4	2.2	0.3	77.53
	642	0.4	2.5	0.4	2.6	0.3	79.03
	641	0.6	2.9	0.3	2.9	0.6	81.54

	NODE	Vxx	Vyy
	Cent	0.3	1.2
	633	0.1	1.5
	634	0.1	0.8
	642	0.5	0.8
	641	0.5	1.5

LC		NODE	Fxx	Fyy	Fxy	Fmax	Fmin	ANGLE
RC ENV~1	Max	Cent	0.6	1.4	1.1	2.2	0.2	-58.07
		633	0.5	1.9	1.1	2.4	0.2	64.67
		634	0.5	1.2	1.1	2.0	0.1	-57.51
		642	0.7	1.2	1.1	2.1	0.3	-54.23
		641	0.7	1.9	1.1	2.5	0.4	61.02
	Min	Cent	-0.7	-0.1	-2.1	0.9	-2.4	-74.27
		633	-0.8	-0.3	-2.1	1.1	-2.4	-76.79
		634	-0.8	0.1	-2.1	0.6	-2.2	-72.34
		642	-0.7	0.1	-2.1	0.7	-2.4	-70.75
		641	-0.7	-0.3	-2.1	1.1	-2.5	-75.85

	NODE	Mxx	Myy	Mxy	Mmax	Mmin	ANGLE
Max	Cent	2.4	-1.0	0.2	2.4	-1.6	1.76
	633	3.7	-1.7	0.3	3.7	-1.9	2.31
	634	0.4	-2.4	0.1	0.4	-3.2	0.75
	642	1.2	-0.4	0.0	1.3	-2.4	0.62
	641	4.2	0.6	0.3	4.2	0.2	2.40
Min	Cent	-5.8	-6.3	-2.6	-4.0	-7.8	-32.38
	633	-3.3	-7.0	-2.6	-2.4	-7.5	-22.96
	634	-8.5	-7.6	-2.7	-6.0	-10.1	-46.67
	642	-8.5	-5.6	-2.6	-4.8	-9.5	-64.74
	641	-3.3	-5.2	-2.5	-1.9	-5.7	-36.77

	NODE	Vxx	Vyy
Max	Cent	9.3	-1.7
	633	9.3	-1.3
	634	9.3	-2.2
	642	9.3	-2.2
	641	9.3	-1.3
Min	Cent	5.3	-4.1
	633	5.5	-4.3
	634	5.5	-4.0
	642	5.2	-4.0
	641	5.2	-4.3

LC		NODE	Fxx	Fyy	Fxy	Fmax	Fmin	ANGLE
RC ENV~2	Max	Cent	0.4	1.0	-0.4	1.6	-0.2	-58.58
		633	0.3	1.2	-0.4	1.7	-0.2	-61.97
		634	0.3	0.9	-0.4	1.4	-0.2	-57.93
		642	0.5	0.9	-0.4	1.5	-0.2	-54.72
		641	0.5	1.2	-0.4	1.8	-0.1	-59.21
	Min	Cent	-0.5	0.6	-0.9	0.7	-0.7	-73.01
		633	-0.6	0.7	-0.9	0.9	-0.8	-75.67
		634	-0.6	0.4	-0.9	0.5	-0.8	-71.06
		642	-0.4	0.4	-0.9	0.5	-0.7	-69.36
		641	-0.4	0.7	-0.9	0.9	-0.6	-74.64

	NODE	Mxx	Myy	Mxy	Mmax	Mmin	ANGLE
Max	Cent	-1.0	-3.3	-0.9	-0.3	-3.8	-23.32
	633	0.7	-3.8	-0.9	1.1	-4.0	-16.08
	634	-2.9	-4.5	-0.9	-2.1	-5.1	-28.64
	642	-2.5	-2.9	-0.9	-1.4	-3.7	-38.09
	641	1.0	-2.3	-0.8	1.5	-2.6	-18.97
Min	Cent	-4.0	-4.6	-1.8	-2.8	-5.5	-29.17
	633	-2.0	-5.1	-1.8	-1.5	-5.5	-20.28
	634	-6.0	-5.7	-1.9	-4.3	-7.2	-42.79
	642	-5.9	-4.1	-1.8	-3.5	-6.7	-62.39
	641	-1.9	-3.7	-1.8	-1.2	-4.1	-32.10

	NODE	Vxx	Vyy
Max	Cent	6.9	-2.9

			633	6.9	-2.7		
			634	6.9	-2.8		
			642	6.9	-2.8		
			641	6.9	-2.7		
		Min	Cent	5.8	-2.9		
			633	5.8	-2.9		
			634	5.8	-3.1		
			642	5.7	-3.1		
			641	5.7	-2.9		

ELEM	MAT	SEC	LC		NODE	Fxx	Fyy	Fxy	Fmax	Fmin	ANGLE
604	1	1	SX	(RS)	Cent	0.8	0.3	1.0	1.6	-0.5	37.84
					634	0.5	0.3	1.0	1.5	-0.6	42.04
					635	0.5	0.3	1.0	1.4	-0.6	41.11
					643	1.1	0.3	1.0	1.8	-0.4	33.54
					642	1.1	0.3	1.0	1.8	-0.4	34.35

		NODE	Mxx	Myy	Mxy	Mmax	Mmin	ANGLE
		Cent	3.5	0.3	0.7	3.7	0.2	12.25
		634	3.6	0.2	0.8	3.8	-0.0	12.91
		635	3.2	0.3	0.7	3.4	0.2	12.42
		643	3.3	0.5	0.6	3.4	0.4	11.86
		642	3.9	0.4	0.8	4.1	0.3	12.03

		NODE	Vxx	Vyy
		Cent	1.0	0.4
		634	0.8	0.4
		635	0.8	0.4
		643	1.2	0.4
		642	1.2	0.4

LC		NODE	Fxx	Fyy	Fxy	Fmax	Fmin	ANGLE
SY	(RS)	Cent	0.3	0.3	1.5	1.9	-1.2	45.09
		634	0.3	0.5	1.5	1.9	-1.2	46.77
		635	0.3	0.3	1.5	1.8	-1.3	45.23
		643	0.4	0.3	1.5	1.9	-1.2	43.97
		642	0.4	0.5	1.5	2.0	-1.1	45.51

		NODE	Mxx	Myy	Mxy	Mmax	Mmin	ANGLE
		Cent	0.5	2.2	0.5	2.3	0.4	74.27
		634	0.5	2.1	0.5	2.2	0.4	75.17
		635	0.5	2.0	0.5	2.2	0.3	72.61
		643	0.5	2.2	0.6	2.4	0.3	72.84
		642	0.6	2.5	0.5	2.7	0.5	75.81

		NODE	Vxx	Vyy
		Cent	0.1	0.6
		634	0.1	0.8
		635	0.1	0.4
		643	0.1	0.4
		642	0.1	0.8

LC		NODE	Fxx	Fyy	Fxy	Fmax	Fmin	ANGLE
RC ENV~1	Max	Cent	0.9	1.0	1.1	2.0	0.2	-51.91
		634	0.6	1.3	1.1	2.0	0.0	-58.86
		635	0.6	0.8	1.1	1.9	-0.1	-48.66
		643	1.3	0.8	1.1	2.1	0.3	-37.15
		642	1.3	1.3	1.1	2.3	0.5	-49.02
	Min	Cent	-0.8	0.1	-2.0	0.6	-2.1	-72.32
		634	-1.0	0.1	-2.0	0.6	-2.2	-73.54
		635	-1.0	0.1	-2.0	0.6	-2.2	-72.93
		643	-1.0	0.1	-2.0	0.6	-2.1	-70.93
		642	-1.0	0.1	-2.0	0.6	-2.1	-71.67

		NODE	Mxx	Myy	Mxy	Mmax	Mmin	ANGLE
	Max	Cent	-0.7	-1.7	-0.2	-0.6	-3.6	-4.36
		634	0.4	-2.4	-0.1	0.4	-3.1	-1.58
		635	-2.3	-3.0	-0.3	-2.3	-4.7	-6.18

643	-1.8	-1.0	-0.3	-1.0	-2.8	-84.95
642	1.0	-0.4	-0.2	1.0	-2.4	-2.83
Min Cent	-10.4	-6.8	-2.7	-5.9	-11.5	-65.96
634	-8.7	-7.7	-2.8	-6.0	-10.3	-48.11
635	-12.2	-8.0	-2.8	-7.2	-13.3	-68.02
643	-11.9	-5.9	-2.7	-5.3	-12.7	-74.54
642	-8.7	-5.7	-2.6	-4.7	-9.8	-63.95

	NODE	Vxx	Vyy
Max Cent	6.8	-2.5	
634	6.9	-2.2	
635	6.9	-2.8	
643	6.7	-2.8	
642	6.7	-2.2	
Min Cent	2.8	-4.0	
634	3.2	-4.0	
635	3.2	-4.0	
643	2.5	-4.0	
642	2.5	-4.0	

LC		NODE	Fxx	Fyy	Fxy	Fmax	Fmin	ANGLE
RC ENV~2	Max	Cent	0.6	0.8	-0.4	1.4	-0.1	-52.52
		634	0.3	0.9	-0.4	1.4	-0.2	-59.31
		635	0.3	0.6	-0.4	1.2	-0.3	-55.18
		643	0.9	0.6	-0.4	1.5	-0.1	-38.42
		642	0.9	0.9	-0.4	1.6	0.1	-49.72
	Min	Cent	-0.6	0.4	-0.9	0.5	-0.8	-70.82
		634	-0.7	0.4	-0.9	0.5	-0.9	-72.40
		635	-0.7	0.3	-0.9	0.4	-0.9	-71.53
		643	-0.4	0.3	-0.9	0.5	-0.7	-68.98
		642	-0.4	0.4	-0.9	0.5	-0.6	-70.05

	NODE	Mxx	Myy	Mxy	Mmax	Mmin	ANGLE
Max	Cent	-3.9	-3.9	-0.9	-2.8	-4.9	-44.67
	634	-3.0	-4.5	-0.9	-2.2	-5.1	-29.40
	635	-5.3	-5.0	-0.9	-4.0	-6.1	-49.71
	643	-4.8	-3.2	-0.8	-2.8	-5.3	-65.49
	642	-2.6	-2.9	-0.9	-1.6	-3.8	-39.56
Min	Cent	-7.4	-5.0	-1.9	-4.4	-8.1	-64.45
	634	-6.1	-5.7	-1.9	-4.3	-7.4	-44.45
	635	-8.8	-5.9	-2.0	-5.4	-9.5	-66.90
	643	-8.5	-4.3	-1.9	-3.9	-9.0	-74.17
	642	-6.0	-4.1	-1.8	-3.4	-6.9	-61.99

	NODE	Vxx	Vyy
Max	Cent	5.0	-2.9
	634	5.1	-2.8
	635	5.1	-2.9
	643	4.9	-2.9
	642	4.9	-2.8
Min	Cent	3.8	-3.1
	634	3.9	-3.1
	635	3.9	-3.2
	643	3.6	-3.2
	642	3.6	-3.1

ELEM	MAT	SEC	LC		NODE	Fxx	Fyy	Fxy	Fmax	Fmin	ANGLE
605	1	1	SX (RS)		Cent	0.7	0.3	0.9	1.4	-0.5	38.34
					635	0.6	0.3	0.9	1.3	-0.5	40.39
					636	0.6	0.2	0.9	1.3	-0.5	39.47
					644	0.8	0.2	0.9	1.5	-0.4	35.54
					643	0.8	0.3	0.9	1.5	-0.4	36.39

	NODE	Mxx	Myy	Mxy	Mmax	Mmin	ANGLE
	Cent	2.7	0.4	0.5	2.8	0.3	10.78
	635	3.1	0.3	0.6	3.2	0.2	10.69
	636	2.4	0.4	0.4	2.5	0.3	12.02
	644	2.3	0.5	0.4	2.4	0.4	11.13
	643	3.2	0.5	0.5	3.2	0.4	9.96

	NODE	Vxx	Vyy

Cent	1.5	0.4	
635	1.5	0.4	
636	1.5	0.4	
644	1.6	0.4	
643	1.6	0.4	

LC		NODE	Fxx	Fyy	Fxy	Fmax	Fmin	ANGLE
SY (RS)		Cent	0.5	0.3	1.3	1.7	-1.0	42.96
		635	0.3	0.3	1.3	1.7	-1.0	44.66
		636	0.3	0.3	1.3	1.6	-1.0	44.42
		644	0.6	0.3	1.3	1.8	-0.9	41.42
		643	0.6	0.3	1.3	1.8	-0.9	41.66

	NODE	Mxx	Myy	Mxy	Mmax	Mmin	ANGLE
	Cent	0.6	2.1	0.6	2.3	0.4	70.57
	635	0.6	2.0	0.5	2.2	0.4	71.03
	636	0.6	2.0	0.6	2.2	0.4	70.85
	644	0.6	2.2	0.7	2.5	0.4	70.12
	643	0.6	2.2	0.6	2.5	0.4	70.49

	NODE	Vxx	Vyy
	Cent	0.1	0.4
	635	0.1	0.4
	636	0.1	0.4
	644	0.2	0.4
	643	0.2	0.4

LC		NODE	Fxx	Fyy	Fxy	Fmax	Fmin	ANGLE
RC ENV~1	Max	Cent	0.8	0.8	1.0	1.5	0.1	48.44
		635	0.6	0.8	1.0	1.5	-0.0	-49.83
		636	0.6	0.9	1.0	1.5	-0.0	-50.17
		644	1.0	0.9	1.0	1.7	0.2	44.92
		643	1.0	0.8	1.0	1.7	0.2	44.99
	Min	Cent	-0.9	0.1	-1.7	0.5	-1.9	-75.07
		635	-1.1	0.1	-1.7	0.5	-1.9	-75.89
		636	-1.1	0.1	-1.7	0.6	-1.9	-76.38
		644	-0.8	0.1	-1.7	0.6	-1.9	-74.15
		643	-0.8	0.1	-1.7	0.5	-2.0	-73.51

		NODE	Mxx	Myy	Mxy	Mmax	Mmin	ANGLE
	Max	Cent	-3.1	-2.1	-0.2	-2.1	-4.0	-86.60
		635	-2.4	-3.0	-0.3	-2.4	-4.7	-7.04
		636	-4.3	-3.3	-0.2	-3.3	-5.0	-86.81
		644	-3.7	-1.2	-0.1	-1.2	-3.9	-88.92
		643	-1.9	-1.0	-0.2	-1.0	-2.9	-86.59
	Min	Cent	-12.8	-7.1	-2.8	-6.5	-13.7	-73.36
		635	-12.3	-8.0	-2.8	-7.2	-13.4	-68.73
		636	-13.8	-8.2	-2.8	-7.7	-14.6	-72.79
		644	-13.3	-6.1	-2.7	-5.6	-14.0	-76.49
		643	-12.0	-6.0	-2.7	-5.3	-12.8	-74.05

		NODE	Vxx	Vyy
	Max	Cent	3.6	-2.9
		635	3.7	-2.8
		636	3.7	-2.9
		644	3.4	-2.9
		643	3.4	-2.8
	Min	Cent	0.3	-4.1
		635	0.5	-4.0
		636	0.5	-4.2
		644	0.2	-4.2
		643	0.2	-4.0

LC		NODE	Fxx	Fyy	Fxy	Fmax	Fmin	ANGLE
RC ENV~2	Max	Cent	0.5	0.6	-0.3	1.0	0.0	-54.33
		635	0.4	0.6	-0.3	1.0	-0.0	-58.52
		636	0.4	0.6	-0.3	1.0	-0.0	-59.22
		644	0.7	0.6	-0.3	1.1	0.1	-49.69

	643	0.7	0.6	-0.3	1.1	0.1	-39.88
Min	Cent	-0.6	0.3	-0.6	0.4	-0.7	-73.95
	635	-0.7	0.3	-0.6	0.4	-0.9	-74.92
	636	-0.7	0.4	-0.6	0.4	-0.9	-75.42
	644	-0.5	0.4	-0.6	0.5	-0.6	-72.86
	643	-0.5	0.3	-0.6	0.4	-0.6	-72.19

	NODE	Mxx	Myy	Mxy	Mmax	Mmin	ANGLE
Max	Cent	-5.7	-4.2	-0.7	-3.8	-6.1	-61.74
	635	-5.4	-5.0	-0.8	-4.1	-6.1	-50.97
	636	-6.6	-5.3	-0.7	-4.8	-6.9	-62.19
	644	-5.9	-3.4	-0.7	-3.2	-6.1	-74.37
	643	-4.8	-3.2	-0.8	-2.9	-5.2	-66.49
Min	Cent	-9.2	-5.3	-1.9	-4.8	-9.8	-73.18
	635	-8.8	-6.0	-1.9	-5.4	-9.6	-67.81
	636	-9.9	-6.2	-1.9	-5.8	-10.5	-72.65
	644	-9.5	-4.5	-1.8	-4.2	-10.0	-76.69
	643	-8.5	-4.4	-1.9	-3.9	-9.1	-73.84

	NODE	Vxx	Vyy
Max	Cent	2.6	-3.0
	635	2.7	-2.9
	636	2.7	-3.0
	644	2.5	-3.0
	643	2.5	-2.9
Min	Cent	1.4	-3.3
	635	1.6	-3.2
	636	1.6	-3.3
	644	1.3	-3.3
	643	1.3	-3.2

ELEM	MAT	SEC	LC		NODE	Fxx	Fyy	Fxy	Fmax	Fmin	ANGLE
606	1	1	SX	(RS)	Cent	0.5	0.2	0.9	1.2	-0.6	41.14
					636	0.5	0.2	0.9	1.3	-0.5	41.05
					637	0.5	0.2	0.9	1.3	-0.6	40.56
					645	0.5	0.2	0.9	1.3	-0.6	40.44
					644	0.5	0.2	0.9	1.3	-0.5	40.93

	NODE	Mxx	Myy	Mxy	Mmax	Mmin	ANGLE
	Cent	1.8	0.4	0.3	1.9	0.4	9.70
	636	2.3	0.4	0.3	2.3	0.3	9.89
	637	1.5	0.4	0.2	1.6	0.4	11.99
	645	1.4	0.5	0.2	1.4	0.5	9.95
	644	2.2	0.5	0.3	2.3	0.4	8.44

	NODE	Vxx	Vyy
	Cent	1.7	0.4
	636	1.6	0.4
	637	1.6	0.4
	645	1.7	0.4
	644	1.7	0.4

LC		NODE	Fxx	Fyy	Fxy	Fmax	Fmin	ANGLE
SY	(RS)	Cent	0.6	0.3	1.3	1.8	-0.9	42.14
		636	0.5	0.3	1.3	1.7	-0.9	43.32
		637	0.5	0.4	1.3	1.7	-0.9	44.38
		645	0.8	0.4	1.3	1.9	-0.7	40.88
		644	0.8	0.3	1.3	1.9	-0.8	39.85

	NODE	Mxx	Myy	Mxy	Mmax	Mmin	ANGLE
	Cent	0.6	2.2	0.6	2.4	0.5	71.93
	636	0.6	2.0	0.5	2.2	0.4	71.21
	637	0.6	2.2	0.5	2.4	0.5	74.93
	645	0.7	2.5	0.6	2.7	0.5	72.63
	644	0.7	2.2	0.7	2.5	0.4	69.05

	NODE	Vxx	Vyy
	Cent	0.2	0.4
	636	0.2	0.4

		637	0.2	0.5
		645	0.3	0.5
		644	0.3	0.4

LC		NODE	Fxx	Fyy	Fxy	Fmax	Fmin	ANGLE
RC ENV~1	Max	Cent	0.7	0.9	1.1	1.7	0.2	48.23
		636	0.5	0.8	1.1	1.6	0.1	50.58
		637	0.5	1.0	1.1	1.7	0.1	52.45
		645	0.8	1.0	1.1	1.9	0.3	45.72
		644	0.8	0.8	1.1	1.8	0.2	43.75
	Min	Cent	-0.9	0.1	-1.5	0.6	-1.9	-81.29
		636	-1.1	0.1	-1.5	0.5	-1.9	-82.01
		637	-1.1	0.0	-1.5	0.6	-1.9	-82.54
		645	-0.8	0.0	-1.5	0.6	-1.9	-80.44
		644	-0.8	0.1	-1.5	0.5	-1.9	-79.57

		NODE	Mxx	Myy	Mxy	Mmax	Mmin	ANGLE
	Max	Cent	-4.5	-2.2	0.0	-2.2	-4.6	89.43
		636	-4.4	-3.3	-0.0	-3.3	-5.0	-89.19
		637	-5.1	-3.3	0.0	-3.3	-5.3	89.08
		645	-4.6	-1.1	0.1	-1.1	-4.6	88.44
		644	-3.8	-1.2	0.0	-1.2	-3.9	89.57
	Min	Cent	-13.1	-7.2	-2.7	-6.8	-13.8	-74.12
		636	-13.7	-8.2	-2.7	-7.7	-14.5	-73.69
		637	-13.0	-8.4	-2.6	-8.0	-13.9	-70.53
		645	-12.4	-6.2	-2.6	-5.7	-13.1	-74.66
		644	-13.2	-6.1	-2.7	-5.6	-13.9	-74.60

		NODE	Vxx	Vyy
	Max	Cent	1.6	-3.0
		636	1.6	-2.9
		637	1.6	-3.1
		645	1.5	-3.1
		644	1.5	-2.9
	Min	Cent	-1.8	-4.4
		636	-1.6	-4.2
		637	-1.6	-4.5
		645	-1.9	-4.5
		644	-1.9	-4.2

LC		NODE	Fxx	Fyy	Fxy	Fmax	Fmin	ANGLE
RC ENV~2	Max	Cent	0.4	0.7	-0.2	0.8	0.1	-64.07
		636	0.3	0.6	-0.2	0.8	0.1	-67.04
		637	0.3	0.7	-0.2	0.8	0.1	-68.90
		645	0.5	0.7	-0.2	0.9	0.2	-60.52
		644	0.5	0.6	-0.2	0.8	0.1	-57.52
	Min	Cent	-0.6	0.4	-0.4	0.4	-0.7	-80.58
		636	-0.8	0.4	-0.4	0.4	-0.8	-81.37
		637	-0.8	0.4	-0.4	0.5	-0.8	-81.94
		645	-0.4	0.4	-0.4	0.5	-0.5	-79.64
		644	-0.4	0.4	-0.4	0.4	-0.5	-78.69

		NODE	Mxx	Myy	Mxy	Mmax	Mmin	ANGLE
	Max	Cent	-6.2	-4.4	-0.5	-4.1	-6.4	-68.58
		636	-6.5	-5.3	-0.5	-4.9	-6.8	-63.59
		637	-6.6	-5.5	-0.4	-4.9	-6.8	-66.22
		645	-5.9	-3.5	-0.5	-3.3	-6.0	-70.89
		644	-5.9	-3.4	-0.6	-3.3	-6.1	-77.55
	Min	Cent	-9.4	-5.4	-1.8	-5.1	-9.9	-74.57
		636	-9.9	-6.2	-1.8	-5.8	-10.4	-73.82
		637	-9.4	-6.4	-1.7	-6.1	-10.0	-70.93
		645	-8.9	-4.6	-1.7	-4.3	-9.4	-75.39
		644	-9.5	-4.5	-1.8	-4.2	-9.9	-75.09

		NODE	Vxx	Vyy
	Max	Cent	0.2	-3.1
		636	0.3	-3.0
		637	0.3	-3.1
		645	0.2	-3.1
		644	0.2	-3.0
	Min	Cent	-1.0	-3.5

					636	-1.0	-3.3			
					637	-1.0	-3.6			
					645	-1.1	-3.6			
					644	-1.1	-3.3			

ELEM	MAT	SEC	LC		NODE	Fxx	Fyy	Fxy	Fmax	Fmin	ANGLE
607	1	1	SX	(RS)	Cent	0.3	0.3	1.0	1.2	-0.7	44.99
					637	0.4	0.2	1.0	1.3	-0.7	42.73
					638	0.4	0.3	1.0	1.3	-0.6	43.88
					646	0.2	0.3	1.0	1.2	-0.7	46.76
					645	0.2	0.2	1.0	1.2	-0.8	45.60

		NODE	Mxx	Myy	Mxy	Mmax	Mmin	ANGLE
		Cent	1.1	0.4	0.2	1.1	0.4	15.01
		637	1.5	0.4	0.2	1.5	0.4	9.93
		638	1.0	0.5	0.3	1.1	0.4	23.01
		646	0.7	0.4	0.2	0.8	0.3	30.36
		645	1.3	0.5	0.1	1.3	0.4	7.95

		NODE	Vxx	Vyy
		Cent	1.5	0.5
		637	1.3	0.4
		638	1.3	0.6
		646	1.7	0.6
		645	1.7	0.4

LC		NODE	Fxx	Fyy	Fxy	Fmax	Fmin	ANGLE
SY	(RS)	Cent	0.7	0.5	1.5	2.1	-0.8	42.90
		637	0.5	0.4	1.5	1.9	-1.0	43.93
		638	0.5	0.7	1.5	2.1	-0.9	46.61
		646	1.0	0.7	1.5	2.3	-0.6	42.02
		645	1.0	0.4	1.5	2.2	-0.8	39.40

	NODE	Mxx	Myy	Mxy	Mmax	Mmin	ANGLE
	Cent	0.7	2.6	0.4	2.7	0.6	78.98
	637	0.6	2.2	0.4	2.3	0.6	77.76
	638	0.6	2.6	0.2	2.6	0.6	82.83
	646	0.8	3.2	0.4	3.3	0.7	80.44
	645	0.9	2.4	0.6	2.6	0.7	72.23

	NODE	Vxx	Vyy
	Cent	0.1	0.9
	637	0.2	0.5
	638	0.2	1.2
	646	0.1	1.2
	645	0.1	0.5

LC		NODE	Fxx	Fyy	Fxy	Fmax	Fmin	ANGLE
RC ENV~1	Max	Cent	0.6	1.2	1.4	2.2	0.2	49.45
		637	0.4	1.0	1.4	2.0	0.2	50.88
		638	0.4	1.4	1.4	2.3	0.2	54.93
		646	1.0	1.4	1.4	2.5	0.4	48.15
		645	1.0	1.0	1.4	2.3	0.3	43.79
	Min	Cent	-0.9	-0.0	-1.5	0.6	-2.1	-79.48
		637	-1.2	-0.0	-1.5	0.5	-2.0	-80.39
		638	-1.2	-0.1	-1.5	0.7	-2.0	-67.79
		646	-1.0	-0.1	-1.5	0.7	-2.2	-78.40
		645	-1.0	-0.0	-1.5	0.6	-2.1	-74.00

		NODE	Mxx	Myy	Mxy	Mmax	Mmin	ANGLE
	Max	Cent	-4.6	-2.0	0.1	-2.0	-4.6	87.75
		637	-5.0	-3.3	0.1	-3.3	-5.1	87.71
		638	-4.5	-3.2	0.2	-3.2	-5.0	85.39
		646	-4.0	-0.5	0.2	-0.4	-4.0	87.52
		645	-4.5	-1.1	0.1	-1.1	-4.6	87.92
	Min	Cent	-11.0	-7.4	-2.5	-6.8	-11.9	-65.62
		637	-12.7	-8.4	-2.5	-8.0	-13.5	-70.65
		638	-10.0	-8.8	-2.4	-7.6	-11.4	-42.50

646	-9.2	-6.8	-2.5	-5.4	-10.4	-60.13
645	-12.2	-6.2	-2.6	-5.6	-13.0	-72.56

	NODE	Vxx	Vyy
Max	Cent	-0.3	-2.8
	637	-0.4	-3.1
	638	-0.4	-2.6
	646	-0.2	-2.6
	645	-0.2	-3.1
Min	Cent	-5.2	-4.7
	637	-5.1	-4.5
	638	-5.1	-5.0
	646	-5.4	-5.0
	645	-5.4	-4.5

LC		NODE	Fxx	Fyy	Fxy	Fmax	Fmin	ANGLE
RC ENV~2	Max	Cent	0.3	0.9	0.0	0.9	0.2	-88.92
		637	0.2	0.7	0.0	0.7	0.1	-88.99
		638	0.2	1.0	0.0	1.0	0.1	-89.16
		646	0.4	1.0	0.0	1.0	0.2	-88.85
		645	0.4	0.7	0.0	0.7	0.2	-88.49
	Min	Cent	-0.6	0.4	-0.2	0.5	-0.6	-83.07
		637	-0.8	0.4	-0.2	0.4	-0.8	-83.46
		638	-0.8	0.5	-0.2	0.5	-0.8	-72.22
		646	-0.4	0.5	-0.2	0.6	-0.4	-82.63
		645	-0.4	0.4	-0.2	0.4	-0.4	-80.01

	NODE	Mxx	Myy	Mxy	Mmax	Mmin	ANGLE
Max	Cent	-5.6	-4.6	-0.2	-4.0	-5.7	-66.42
	637	-6.4	-5.5	-0.2	-5.0	-6.5	-66.88
	638	-5.5	-5.6	-0.0	-4.7	-5.8	-59.05
	646	-4.7	-3.6	-0.2	-3.0	-4.8	-66.95
	645	-5.7	-3.5	-0.4	-3.3	-5.8	-71.09
Min	Cent	-7.9	-5.5	-1.6	-5.2	-8.6	-66.52
	637	-9.2	-6.3	-1.6	-6.1	-9.7	-71.43
	638	-7.3	-6.6	-1.6	-5.8	-8.2	-39.27
	646	-6.7	-4.7	-1.6	-4.1	-7.4	-61.21
	645	-8.7	-4.6	-1.7	-4.2	-9.2	-72.28

	NODE	Vxx	Vyy
Max	Cent	-1.7	-3.2
	637	-1.6	-3.1
	638	-1.6	-3.3
	646	-1.8	-3.3
	645	-1.8	-3.1
Min	Cent	-3.7	-3.7
	637	-3.5	-3.6
	638	-3.5	-3.8
	646	-3.8	-3.8
	645	-3.8	-3.6

ELEM	MAT	SEC	LC		NODE	Fxx	Fyy	Fxy	Fmax	Fmin	ANGLE
608	1	1	SX (RS)		Cent	0.2	0.3	1.0	1.2	-0.8	45.38
					638	0.2	0.3	1.0	1.3	-0.7	46.46
					639	0.2	0.2	1.0	1.2	-0.8	44.99
					647	0.3	0.2	1.0	1.2	-0.8	44.12
					646	0.3	0.3	1.0	1.3	-0.7	45.58

	NODE	Mxx	Myy	Mxy	Mmax	Mmin	ANGLE
	Cent	0.7	0.4	0.5	1.0	0.1	37.22
	638	1.0	0.5	0.4	1.2	0.3	30.09
	639	0.7	0.4	0.6	1.1	-0.0	38.03
	647	0.6	0.4	0.5	1.0	-0.0	40.02
	646	0.6	0.4	0.3	0.9	0.1	37.83

	NODE	Vxx	Vyy
	Cent	0.8	0.4
	638	0.8	0.6
	639	0.8	0.2
	647	0.8	0.2

		646	0.8	0.6			

LC		NODE	Fxx	Fyy	Fxy	Fmax	Fmin	ANGLE
SY (RS)		Cent	0.8	1.0	1.4	2.3	-0.5	47.67
		638	0.6	0.7	1.4	2.0	-0.8	45.82
		639	0.6	1.4	1.4	2.4	-0.4	53.07
		647	0.9	1.4	1.4	2.6	-0.3	49.91
		646	0.9	0.7	1.4	2.2	-0.6	42.50

		NODE	Mxx	Myy	Mxy	Mmax	Mmin	ANGLE
		Cent	0.8	3.0	0.2	3.0	0.8	85.37
		638	0.7	2.5	0.2	2.6	0.7	84.23
		639	0.6	2.6	0.3	2.7	0.6	82.37
		647	0.8	3.8	0.2	3.9	0.8	86.86
		646	1.1	3.1	0.2	3.1	1.1	83.66

		NODE	Vxx	Vyy
		Cent	0.5	1.8
		638	0.2	1.2
		639	0.2	2.4
		647	0.8	2.4
		646	0.8	1.2

LC		NODE	Fxx	Fyy	Fxy	Fmax	Fmin	ANGLE
RC ENV~1	Max	Cent	0.5	1.7	1.4	2.6	0.2	56.33
		638	0.2	1.4	1.4	2.3	0.1	54.42
		639	0.2	2.2	1.4	2.9	0.2	61.99
		647	0.7	2.2	1.4	3.1	0.3	58.47
		646	0.7	1.4	1.4	2.4	0.3	49.98
	Min	Cent	-1.0	-0.3	-1.3	0.7	-2.1	-52.14
		638	-1.2	-0.1	-1.3	0.6	-1.9	-71.81
		639	-1.2	-0.6	-1.3	0.6	-2.1	-48.52
		647	-1.1	-0.6	-1.3	0.5	-2.2	-50.29
		646	-1.1	-0.1	-1.3	0.6	-2.0	-61.18

		NODE	Mxx	Myy	Mxy	Mmax	Mmin	ANGLE
	Max	Cent	-3.3	-1.7	0.6	-1.6	-3.4	79.44
		638	-4.3	-3.2	0.5	-3.1	-4.7	79.57
		639	-3.2	-3.3	0.9	-2.6	-3.9	45.17
		647	-2.0	0.2	0.7	0.2	-2.0	80.76
		646	-3.3	-0.5	0.3	-0.5	-3.3	87.30
	Min	Cent	-7.3	-7.7	-2.2	-5.3	-8.9	-35.58
		638	-9.9	-8.7	-2.3	-7.4	-11.2	-36.06
		639	-5.8	-8.7	-2.0	-5.2	-8.9	-21.08
		647	-4.6	-7.5	-2.1	-3.5	-7.5	0.22
		646	-9.0	-6.6	-2.4	-5.4	-10.1	-14.30

		NODE	Vxx	Vyy
	Max	Cent	-2.0	-2.0
		638	-1.7	-2.6
		639	-1.7	-1.4
		647	-2.3	-1.4
		646	-2.3	-2.6
	Min	Cent	-8.2	-5.6
		638	-7.8	-5.0
		639	-7.8	-6.2
		647	-8.5	-6.2
		646	-8.5	-5.0

LC		NODE	Fxx	Fyy	Fxy	Fmax	Fmin	ANGLE
RC ENV~2	Max	Cent	0.1	1.2	0.2	1.2	0.1	85.46
		638	0.1	1.0	0.2	1.0	0.0	85.35
		639	0.1	1.4	0.2	1.4	0.1	86.18
		647	0.2	1.4	0.2	1.4	0.2	85.56
		646	0.2	1.0	0.2	1.0	0.2	84.42
	Min	Cent	-0.7	0.6	-0.1	0.6	-0.7	-79.35
		638	-0.8	0.4	-0.1	0.5	-0.8	-78.19
		639	-0.8	0.7	-0.1	0.7	-0.8	-82.55
		647	-0.5	0.7	-0.1	0.7	-0.6	-80.31

646	-0.5	0.4	-0.1	0.5	-0.6	-71.97

	NODE	Mxx	Myy	Mxy	Mmax	Mmin	ANGLE
Max	Cent	-4.0	-4.5	0.2	-3.5	-4.7	-53.74
	638	-5.2	-5.6	0.1	-4.8	-5.7	-59.41
	639	-3.4	-5.3	0.4	-3.4	-5.7	-4.77
	647	-2.3	-3.3	0.2	-2.0	-3.6	-45.33
	646	-4.3	-3.6	-0.1	-3.0	-4.3	-67.25
Min	Cent	-5.3	-5.6	-1.4	-4.2	-6.3	-34.90
	638	-7.2	-6.6	-1.4	-5.7	-8.0	-30.65
	639	-4.4	-6.7	-1.2	-4.0	-6.7	-13.64
	647	-3.4	-4.7	-1.3	-2.8	-4.8	-16.34
	646	-6.5	-4.6	-1.5	-4.0	-7.1	-57.45

	NODE	Vxx	Vyy
Max	Cent	-2.8	-3.3
	638	-2.5	-3.3
	639	-2.5	-3.3
	647	-3.0	-3.3
	646	-3.0	-3.3
Min	Cent	-5.7	-3.8
	638	-5.4	-3.8
	639	-5.4	-3.8
	647	-5.9	-3.8
	646	-5.9	-3.8

ELEM	MAT	SEC	LC		NODE	Fxx	Fyy	Fxy	Fmax	Fmin	ANGLE
609	1	1	SX	(RS)	Cent	0.0	0.1	1.0	1.1	-0.9	46.58
					639	0.1	0.2	1.0	1.2	-0.8	46.95
					640	0.1	0.0	1.0	1.1	-0.9	43.51
					648	0.1	0.0	1.0	1.1	-0.9	43.49
					647	0.1	0.2	1.0	1.2	-0.8	46.93

	NODE	Mxx	Myy	Mxy	Mmax	Mmin	ANGLE
	Cent	0.4	0.2	0.7	1.0	-0.5	41.13
	639	0.5	0.5	0.7	1.2	-0.2	43.15
	640	0.1	0.0	0.8	0.9	-0.7	42.97
	648	0.8	0.2	0.9	1.4	-0.4	35.09
	647	0.4	0.4	0.7	1.1	-0.3	45.68

	NODE	Vxx	Vyy
	Cent	0.7	0.1
	639	0.8	0.2
	640	0.8	0.0
	648	0.9	0.0
	647	0.9	0.2

LC		NODE	Fxx	Fyy	Fxy	Fmax	Fmin	ANGLE
SY	(RS)	Cent	0.8	1.6	0.6	1.9	0.5	61.34
		639	0.6	1.4	0.6	1.7	0.3	61.09
		640	0.6	1.7	0.6	2.0	0.4	66.98
		648	1.0	1.7	0.6	2.1	0.7	61.27
		647	1.0	1.4	0.6	1.8	0.6	53.43

	NODE	Mxx	Myy	Mxy	Mmax	Mmin	ANGLE
	Cent	0.7	3.2	0.1	3.2	0.7	86.66
	639	0.7	2.6	0.2	2.6	0.7	83.86
	640	0.7	2.5	0.1	2.5	0.7	87.90
	648	0.8	3.9	0.1	3.9	0.8	88.36
	647	0.8	3.9	0.2	3.9	0.8	85.93

	NODE	Vxx	Vyy
	Cent	0.3	2.4
	639	0.2	2.4
	640	0.2	2.5
	648	0.4	2.5
	647	0.4	2.4

LC		NODE	Fxx	Fyy	Fxy	Fmax	Fmin	ANGLE
RC ENV~1	Max	Cent	0.4	2.4	1.0	2.6	0.3	73.75
		639	0.2	2.1	1.0	2.3	0.0	73.60
		640	0.2	2.6	1.0	2.8	0.1	76.49
		648	0.7	2.6	1.0	2.8	0.5	73.78
		647	0.7	2.1	1.0	2.4	0.5	69.66
	Min	Cent	-1.2	-0.7	-1.0	-0.3	-1.5	-55.56
		639	-1.2	-0.6	-1.0	-0.2	-1.4	-55.68
		640	-1.2	-0.9	-1.0	-0.4	-1.5	-48.94
		648	-1.3	-0.9	-1.0	-0.5	-1.7	-55.82
		647	-1.3	-0.6	-1.0	-0.3	-1.6	-61.50

		NODE	Mxx	Myy	Mxy	Mmax	Mmin	ANGLE
	Max	Cent	-1.3	-1.3	1.6	-0.6	-2.5	52.34
		639	-3.2	-3.3	1.3	-2.4	-4.0	42.83
		640	0.6	-2.7	1.8	0.9	-3.3	-11.82
		648	2.1	0.6	1.9	2.2	-1.1	-7.85
		647	-1.8	0.2	1.3	0.6	-2.1	69.80
	Min	Cent	-3.2	-7.8	-1.5	-3.1	-7.9	8.03
		639	-6.0	-8.7	-1.8	-5.5	-8.8	-16.54
		640	-3.0	-7.8	-1.4	-2.9	-7.9	10.12
		648	-2.0	-7.3	-1.2	-2.0	-7.4	5.61
		647	-4.5	-7.6	-1.6	-3.8	-7.6	-22.62

		NODE	Vxx	Vyy
	Max	Cent	-1.8	-1.0
		639	-1.8	-1.4
		640	-1.8	-0.7
		648	-1.5	-0.7
		647	-1.5	-1.4
	Min	Cent	-9.9	-5.9
		639	-9.9	-6.2
		640	-9.9	-5.7
		648	-10.0	-5.7
		647	-10.0	-6.2

LC		NODE	Fxx	Fyy	Fxy	Fmax	Fmin	ANGLE
RC ENV~2	Max	Cent	-0.0	1.5	0.1	1.5	-0.1	87.01
		639	-0.1	1.4	0.1	1.4	-0.1	87.06
		640	-0.1	1.6	0.1	1.6	-0.1	87.26
		648	-0.0	1.6	0.1	1.6	-0.1	86.94
		647	-0.0	1.4	0.1	1.4	-0.1	86.71
	Min	Cent	-0.7	0.7	-0.1	0.7	-0.8	-83.06
		639	-0.9	0.6	-0.1	0.6	-0.9	-82.29
		640	-0.9	0.8	-0.1	0.8	-0.9	-83.79
		648	-0.6	0.8	-0.1	0.8	-0.6	-83.69
		647	-0.6	0.6	-0.1	0.6	-0.6	-82.13

		NODE	Mxx	Myy	Mxy	Mmax	Mmin	ANGLE
	Max	Cent	-1.2	-3.7	0.8	-1.2	-3.9	1.31
		639	-3.3	-5.3	0.6	-3.3	-5.6	-5.11
		640	-0.0	-3.9	1.0	0.1	-3.9	-8.58
		648	1.1	-2.2	1.1	1.2	-2.2	-4.34
		647	-2.1	-3.3	0.7	-2.1	-3.4	-0.98
	Min	Cent	-2.5	-5.3	-0.8	-2.3	-5.3	10.56
		639	-4.5	-6.6	-1.0	-4.2	-6.6	-6.85
		640	-2.4	-5.7	-0.7	-2.1	-5.8	15.83
		648	-1.2	-4.1	-0.6	-0.9	-4.1	20.84
		647	-3.3	-4.6	-0.9	-2.9	-4.6	0.49

		NODE	Vxx	Vyy
	Max	Cent	-2.5	-3.0
		639	-2.5	-3.3
		640	-2.5	-2.7
		648	-2.4	-2.7
		647	-2.4	-3.3
	Min	Cent	-6.7	-3.5
		639	-6.7	-3.8
		640	-6.7	-3.2
		648	-6.7	-3.2
		647	-6.7	-3.8

ELEM	MAT	SEC	LC		NODE	Fxx	Fyy	Fxy	Fmax	Fmin	ANGLE
610	1	1	SX	(RS)	Cent	0.6	0.4	1.3	1.8	-0.8	42.44
					189	1.1	0.8	1.3	2.3	-0.4	42.07
					641	1.1	0.3	1.3	2.0	-0.7	36.46
					649	0.2	0.3	1.3	1.5	-1.1	46.00
					192	0.2	0.8	1.3	1.8	-0.8	51.74

		NODE	Mxx	Myy	Mxy	Mmax	Mmin	ANGLE
		Cent	2.4	0.3	1.7	3.4	-0.7	29.41
		189	3.3	0.8	1.2	3.8	0.3	22.49
		641	3.4	0.5	2.0	4.3	-0.5	26.88
		649	5.9	1.6	2.0	6.7	0.8	21.09
		192	3.7	1.4	1.2	4.2	0.9	23.51

	NODE	Vxx	Vyy
	Cent	8.1	0.7
	189	0.6	1.6
	641	0.6	2.9
	649	15.7	2.9
	192	15.7	1.6

LC		NODE	Fxx	Fyy	Fxy	Fmax	Fmin	ANGLE
SY	(RS)	Cent	0.8	2.4	1.5	3.3	-0.0	58.95
		189	0.5	3.2	1.5	3.8	-0.2	66.21
		641	0.5	1.6	1.5	2.6	-0.5	55.66
		649	1.2	1.6	1.5	2.9	-0.1	49.03
		192	1.2	3.2	1.5	3.9	0.4	61.82

		NODE	Mxx	Myy	Mxy	Mmax	Mmin	ANGLE
		Cent	0.8	3.5	0.3	3.5	0.8	83.57
		189	0.8	2.7	0.3	2.7	0.7	81.72
		641	0.8	3.0	0.3	3.1	0.7	81.89
		649	0.7	3.4	0.4	3.4	0.6	81.20
		192	2.2	4.9	0.4	4.9	2.2	82.15

	NODE	Vxx	Vyy
	Cent	2.3	2.5
	189	0.2	3.8
	641	0.2	1.2
	649	4.5	1.2
	192	4.5	3.8

LC		NODE	Fxx	Fyy	Fxy	Fmax	Fmin	ANGLE
RC ENV~1	Max	Cent	0.7	3.5	1.0	3.9	0.4	72.57
		189	1.1	4.6	1.0	4.8	0.6	77.07
		641	1.1	2.5	1.0	2.9	0.3	68.07
		649	1.0	2.5	1.0	3.0	0.5	64.39
		192	1.0	4.6	1.0	4.8	0.7	75.65
	Min	Cent	-1.0	-1.2	-1.9	0.8	-3.1	-43.10
		189	-1.1	-1.8	-1.9	0.9	-3.2	-35.96
		641	-1.1	-0.7	-1.9	1.1	-2.5	88.86
		649	-1.5	-0.7	-1.9	0.9	-3.1	-50.56
		192	-1.5	-1.8	-1.9	0.3	-3.6	-42.93

		NODE	Mxx	Myy	Mxy	Mmax	Mmin	ANGLE
	Max	Cent	5.4	2.9	0.7	5.5	2.5	7.33
		189	8.0	1.3	0.1	8.0	1.1	0.79
		641	3.7	0.6	1.0	3.9	0.2	9.86
		649	7.4	4.0	1.1	7.6	2.1	11.49
		192	9.1	5.8	0.2	9.1	5.6	1.46
	Min	Cent	0.6	-4.0	-2.8	1.8	-4.3	-17.01
		189	1.4	-4.1	-2.5	2.6	-4.3	-26.05
		641	-3.0	-5.4	-2.9	-2.3	-5.8	-33.20
		649	-4.4	-2.7	-2.8	-0.5	-6.0	-66.57
		192	1.8	-4.0	-2.3	3.1	-4.2	-31.68

	NODE	Vxx	Vyy

Max	Cent	15.3	-2.3	
	189	11.5	-0.4	
	641	11.5	-2.6	
	649	22.7	-2.6	
	192	22.7	-0.4	
Min	Cent	-1.0	-7.7	
	189	6.8	-8.0	
	641	6.8	-9.5	
	649	-8.8	-9.5	
	192	-8.8	-8.0	

LC		NODE	Fxx	Fyy	Fxy	Fmax	Fmin	ANGLE
RC ENV~2	Max	Cent	0.2	2.0	-0.0	2.2	-0.3	-64.34
		189	0.6	2.5	-0.0	2.6	-0.1	-80.42
		641	0.6	1.5	-0.0	2.1	-0.2	-59.10
		649	-0.1	1.5	-0.0	1.9	-0.3	-65.26
		192	-0.1	2.5	-0.0	2.6	-0.3	-80.93
	Min	Cent	-0.5	0.9	-1.1	1.3	-0.5	-81.17
		189	-0.5	0.8	-1.1	1.5	-0.5	-69.94
		641	-0.5	0.9	-1.1	0.9	-0.5	-88.48
		649	-0.5	0.9	-1.1	0.9	-0.8	-88.31
		192	-0.5	0.8	-1.1	1.4	-0.8	-62.72

		NODE	Mxx	Myy	Mxy	Mmax	Mmin	ANGLE
	Max	Cent	3.4	-0.5	-0.6	3.9	-0.8	-18.56
		189	5.6	-1.4	-0.9	5.8	-1.6	-11.66
		641	0.8	-2.2	-0.5	1.4	-2.6	-20.07
		649	2.9	0.8	-0.3	3.7	0.3	-28.58
		192	6.1	1.3	-0.8	6.3	1.0	-10.55
	Min	Cent	1.2	-1.6	-1.8	1.7	-1.9	-15.80
		189	2.9	-2.6	-1.8	3.2	-2.8	-11.80
		641	-1.8	-3.7	-1.8	-1.4	-4.1	-27.10
		649	-1.7	-0.3	-1.6	-0.1	-2.2	-56.80
		192	4.2	-0.2	-1.6	4.6	-0.5	-17.73

		NODE	Vxx	Vyy
	Max	Cent	10.8	-4.3
		189	8.6	-4.1
		641	8.6	-4.1
		649	13.5	-4.1
		192	13.5	-4.1
	Min	Cent	5.3	-5.8
		189	7.3	-5.0
		641	7.3	-7.0
		649	2.7	-7.0
		192	2.7	-5.0

ELEM	MAT	SEC	LC		NODE	Fxx	Fyy	Fxy	Fmax	Fmin	ANGLE
611	1	1	SX (RS)		Cent	1.8	0.2	1.7	2.9	-0.8	32.12
					641	0.7	0.5	1.7	2.3	-1.1	43.00
					642	0.7	0.5	1.7	2.2	-1.1	42.86
					650	3.0	0.5	1.7	3.8	-0.4	26.35
					649	3.0	0.5	1.7	3.8	-0.4	26.44

	NODE	Mxx	Myy	Mxy	Mmax	Mmin	ANGLE
	Cent	4.4	0.5	1.0	4.6	0.3	13.15
	641	3.6	0.4	1.2	4.0	0.0	18.49
	642	4.0	0.2	0.8	4.2	0.0	11.69
	650	4.4	0.7	0.8	4.5	0.5	11.54
	649	5.5	1.5	1.2	5.9	1.2	15.08

	NODE	Vxx	Vyy
	Cent	0.7	1.8
	641	0.5	2.9
	642	0.5	0.7
	650	1.8	0.7
	649	1.8	2.9

LC		NODE	Fxx	Fyy	Fxy	Fmax	Fmin	ANGLE

SY (RS)	Cent	0.4	1.0	1.9	2.6	-1.2	49.70
	641	0.5	1.8	1.9	3.1	-0.9	54.71
	642	0.5	0.4	1.9	2.3	-1.4	44.93
	650	0.5	0.4	1.9	2.3	-1.4	44.60
	649	0.5	1.8	1.9	3.1	-0.8	54.41

	NODE	Mxx	Myy	Mxy	Mmax	Mmin	ANGLE
	Cent	0.6	2.9	0.6	3.0	0.5	76.04
	641	0.6	3.0	0.5	3.1	0.6	79.24
	642	0.4	2.5	0.5	2.6	0.2	76.93
	650	0.5	2.2	0.8	2.5	0.2	69.57
	649	1.3	3.7	0.7	3.9	1.1	74.23

	NODE	Vxx	Vyy
	Cent	1.1	0.4
	641	0.5	1.2
	642	0.5	0.4
	650	1.7	0.4
	649	1.7	1.2

LC		NODE	Fxx	Fyy	Fxy	Fmax	Fmin	ANGLE
RC ENV~1	Max	Cent	2.1	1.6	1.2	3.5	0.3	-39.63
		641	0.7	2.7	1.2	3.5	-0.0	-58.18
		642	0.7	0.8	1.2	2.5	-0.3	-42.78
		650	3.5	0.8	1.2	4.2	0.4	-27.51
		649	3.5	2.7	1.2	4.6	1.0	-36.60
	Min	Cent	-1.6	-0.3	-2.5	0.8	-3.1	-87.08
		641	-0.7	-0.8	-2.5	1.1	-3.1	-87.10
		642	-0.7	-0.1	-2.5	0.6	-2.8	-85.78
		650	-2.4	-0.1	-2.5	0.5	-3.9	-87.07
		649	-2.4	-0.8	-2.5	1.1	-3.7	-87.77

		NODE	Mxx	Myy	Mxy	Mmax	Mmin	ANGLE
	Max	Cent	3.4	1.7	0.1	3.4	-0.4	1.11
		641	4.1	0.6	0.3	4.1	0.4	2.98
		642	1.2	-0.4	-0.1	1.2	-2.5	-1.68
		650	2.0	2.3	-0.1	2.3	0.7	-88.52
		649	6.5	4.3	0.3	6.5	2.2	4.49
	Min	Cent	-5.8	-4.0	-2.3	-2.5	-6.8	-67.15
		641	-3.2	-5.4	-2.3	-1.9	-5.7	-38.19
		642	-8.5	-5.3	-2.4	-4.5	-9.4	-66.79
		650	-8.3	-2.2	-2.3	-1.2	-8.8	-80.37
		649	-4.6	-3.2	-2.2	-0.6	-5.5	-68.69

		NODE	Vxx	Vyy
	Max	Cent	9.9	-3.6
		641	9.3	-2.6
		642	9.3	-4.6
		650	10.4	-4.6
		649	10.4	-2.6
	Min	Cent	4.6	-8.6
		641	5.2	-9.5
		642	5.2	-7.8
		650	3.9	-7.8
		649	3.9	-9.5

LC		NODE	Fxx	Fyy	Fxy	Fmax	Fmin	ANGLE
RC ENV~2	Max	Cent	1.3	1.0	-0.1	2.5	-0.2	-40.54
		641	0.4	1.7	-0.1	2.5	-0.3	-58.66
		642	0.4	0.5	-0.1	1.8	-0.4	-43.44
		650	2.1	0.5	-0.1	2.9	-0.2	-28.18
		649	2.1	1.7	-0.1	3.2	0.3	-37.74
	Min	Cent	-0.5	0.6	-1.4	0.6	-0.5	-83.24
		641	-0.4	0.8	-1.4	0.9	-0.6	-83.69
		642	-0.4	0.2	-1.4	0.4	-1.1	-80.47
		650	-0.7	0.2	-1.4	0.4	-0.7	-82.71
		649	-0.7	0.8	-1.4	0.9	-0.7	-84.77

		NODE	Mxx	Myy	Mxy	Mmax	Mmin	ANGLE
	Max	Cent	-0.5	-1.2	-0.7	0.4	-1.8	-34.28

		641	0.9	-2.2	-0.6	1.3	-2.6	-17.18
		642	-2.5	-2.8	-0.8	-1.5	-3.7	-37.88
		650	-2.1	0.0	-0.7	0.4	-2.4	-64.13
		649	2.0	0.6	-0.5	2.8	0.1	-31.02
	Min	Cent	-3.9	-2.1	-1.6	-1.7	-4.6	-64.19
		641	-1.9	-3.7	-1.6	-1.2	-4.0	-32.45
		642	-5.9	-3.9	-1.7	-3.3	-6.6	-64.46
		650	-5.7	-0.9	-1.6	-0.7	-6.1	-79.91
		649	-2.1	-0.5	-1.5	-0.2	-2.8	-64.69

	NODE	Vxx	Vyy
Max	Cent	7.3	-4.5
	641	6.9	-4.1
	642	6.9	-4.9
	650	7.6	-4.9
	649	7.6	-4.1
Min	Cent	5.6	-6.5
	641	5.7	-7.0
	642	5.7	-5.9
	650	5.3	-5.9
	649	5.3	-7.0

ELEM	MAT	SEC	LC		NODE	Fxx	Fyy	Fxy	Fmax	Fmin	ANGLE
612	1	1	SX (RS)		Cent	1.5	0.4	1.1	2.2	-0.3	31.30
					642	1.1	0.5	1.1	1.9	-0.3	37.96
					643	1.1	0.3	1.1	1.8	-0.5	35.14
					651	2.0	0.3	1.1	2.5	-0.3	26.00
					650	2.0	0.5	1.1	2.6	-0.1	28.02

	NODE	Mxx	Myy	Mxy	Mmax	Mmin	ANGLE
	Cent	3.6	0.4	0.6	3.7	0.4	9.69
	642	3.9	0.2	0.7	4.0	0.1	9.90
	643	3.3	0.4	0.6	3.4	0.3	10.51
	651	3.2	0.6	0.5	3.3	0.5	9.84
	650	4.2	0.6	0.6	4.3	0.5	9.00

	NODE	Vxx	Vyy
	Cent	1.5	0.6
	642	1.2	0.7
	643	1.2	0.4
	651	1.8	0.4
	650	1.8	0.7

LC		NODE	Fxx	Fyy	Fxy	Fmax	Fmin	ANGLE
SY (RS)		Cent	0.6	0.4	1.3	1.8	-0.9	42.86
		642	0.4	0.4	1.3	1.7	-0.9	45.23
		643	0.4	0.3	1.3	1.7	-1.0	43.98
		651	0.7	0.3	1.3	1.9	-0.8	40.50
		650	0.7	0.4	1.3	1.9	-0.8	41.73

	NODE	Mxx	Myy	Mxy	Mmax	Mmin	ANGLE
	Cent	0.6	2.3	0.8	2.6	0.3	68.85
	642	0.6	2.5	0.7	2.7	0.4	73.00
	643	0.4	2.1	0.7	2.4	0.2	69.49
	651	0.7	2.1	0.9	2.5	0.3	64.21
	650	0.5	2.3	0.8	2.6	0.2	68.66

	NODE	Vxx	Vyy
	Cent	0.2	0.3
	642	0.1	0.4
	643	0.1	0.1
	651	0.5	0.1
	650	0.5	0.4

LC		NODE	Fxx	Fyy	Fxy	Fmax	Fmin	ANGLE
RC ENV~1	Max	Cent	1.7	0.7	0.9	2.3	0.3	-30.50
		642	1.2	0.8	0.9	1.9	0.3	-34.13
		643	1.2	0.6	0.9	2.0	0.1	-35.99

		651	2.3	0.6	0.9	2.6	0.3	-27.31
		650	2.3	0.8	0.9	2.6	0.5	-25.96
	Min	Cent	-1.3	-0.1	-1.7	0.5	-2.3	-83.09
		642	-1.0	-0.2	-1.7	0.6	-2.1	-82.86
		643	-1.0	-0.0	-1.7	0.4	-2.0	-81.87
		651	-1.7	-0.0	-1.7	0.4	-2.6	-83.31
		650	-1.7	-0.2	-1.7	0.6	-2.6	-83.99

	NODE	Mxx	Myy	Mxy	Mmax	Mmin	ANGLE
Max	Cent	-0.0	0.6	-0.2	0.6	-1.3	-87.67
	642	1.0	-0.3	-0.3	1.0	-2.3	-4.00
	643	-1.8	-1.2	-0.2	-1.2	-3.0	-87.00
	651	-1.1	1.7	-0.0	1.7	-1.3	-89.62
	650	1.9	2.3	-0.1	2.4	0.6	-88.31
Min	Cent	-10.0	-3.9	-2.6	-3.2	-10.7	-76.16
	642	-8.6	-5.4	-2.5	-4.5	-9.6	-66.16
	643	-11.9	-5.8	-2.6	-5.3	-12.7	-74.93
	651	-11.4	-2.5	-2.6	-1.8	-11.9	-80.12
	650	-8.2	-2.3	-2.5	-1.0	-8.8	-77.46

	NODE	Vxx	Vyy
Max	Cent	6.8	-4.8
	642	6.7	-4.6
	643	6.7	-4.9
	651	6.8	-4.9
	650	6.8	-4.6
Min	Cent	2.1	-7.5
	642	2.5	-7.8
	643	2.5	-7.2
	651	1.8	-7.2
	650	1.8	-7.8

LC		NODE	Fxx	Fyy	Fxy	Fmax	Fmin	ANGLE
RC ENV~2	Max	Cent	1.1	0.5	-0.2	1.6	-0.1	-31.62
		642	0.8	0.5	-0.2	1.4	-0.2	-35.31
		643	0.8	0.5	-0.2	1.4	-0.2	-37.07
		651	1.4	0.5	-0.2	1.8	-0.1	-28.36
		650	1.4	0.5	-0.2	1.8	-0.1	-27.05
	Min	Cent	-0.5	0.2	-0.8	0.4	-0.6	-80.21
		642	-0.4	0.1	-0.8	0.4	-0.5	-80.01
		643	-0.4	0.2	-0.8	0.3	-0.5	-78.73
		651	-0.6	0.2	-0.8	0.3	-0.6	-80.39
		650	-0.6	0.1	-0.8	0.4	-0.6	-81.35

	NODE	Mxx	Myy	Mxy	Mmax	Mmin	ANGLE
Max	Cent	-3.4	-1.6	-0.8	-1.3	-3.8	-67.01
	642	-2.6	-2.8	-0.8	-1.7	-3.7	-39.64
	643	-4.9	-3.3	-0.8	-2.9	-5.3	-61.43
	651	-4.2	-0.4	-0.8	-0.2	-4.4	-77.21
	650	-2.0	0.0	-0.8	0.4	-2.4	-63.32
Min	Cent	-7.0	-2.6	-1.8	-2.3	-7.5	-75.76
	642	-6.0	-4.0	-1.8	-3.3	-6.8	-64.17
	643	-8.5	-4.3	-1.8	-3.9	-9.0	-74.48
	651	-8.0	-1.4	-1.8	-1.2	-8.4	-80.12
	650	-5.6	-0.8	-1.8	-0.6	-6.1	-77.10

	NODE	Vxx	Vyy
Max	Cent	5.0	-5.0
	642	4.9	-4.9
	643	4.9	-5.1
	651	5.0	-5.1
	650	5.0	-4.9
Min	Cent	3.4	-5.7
	642	3.6	-5.9
	643	3.6	-5.5
	651	3.2	-5.5
	650	3.2	-5.9

ELEM	MAT	SEC	LC		NODE	Fxx	Fyy	Fxy	Fmax	Fmin	ANGLE
613	1	1	SX (RS)		Cent	1.0	0.3	0.9	1.6	-0.3	33.41
					643	0.8	0.3	0.9	1.5	-0.3	37.52

		644	0.8	0.2	0.9	1.5	-0.4	35.41
		652	1.3	0.2	0.9	1.8	-0.3	29.82
		651	1.3	0.3	0.9	1.8	-0.2	31.60

	NODE	Mxx	Myy	Mxy	Mmax	Mmin	ANGLE
	Cent	2.7	0.4	0.4	2.8	0.4	8.69
	643	3.2	0.4	0.4	3.2	0.3	8.55
	644	2.3	0.4	0.3	2.4	0.3	9.19
	652	2.3	0.5	0.3	2.3	0.4	9.03
	651	3.3	0.6	0.4	3.3	0.6	8.48

	NODE	Vxx	Vyy
	Cent	1.6	0.3
	643	1.6	0.4
	644	1.6	0.2
	652	1.7	0.2
	651	1.7	0.4

LC		NODE	Fxx	Fyy	Fxy	Fmax	Fmin	ANGLE
SY (RS)		Cent	0.8	0.3	1.2	1.7	-0.7	39.40
		643	0.6	0.3	1.2	1.6	-0.7	41.31
		644	0.6	0.3	1.2	1.7	-0.7	41.90
		652	0.9	0.3	1.2	1.8	-0.6	38.06
		651	0.9	0.3	1.2	1.8	-0.6	37.49

	NODE	Mxx	Myy	Mxy	Mmax	Mmin	ANGLE
	Cent	0.7	2.1	0.8	2.5	0.3	64.78
	643	0.6	2.1	0.8	2.4	0.3	67.42
	644	0.6	2.1	0.8	2.5	0.3	66.84
	652	0.8	2.1	0.9	2.6	0.3	62.34
	651	0.9	2.1	0.9	2.6	0.4	62.69

	NODE	Vxx	Vyy
	Cent	0.2	0.1
	643	0.2	0.1
	644	0.2	0.2
	652	0.2	0.2
	651	0.2	0.1

LC		NODE	Fxx	Fyy	Fxy	Fmax	Fmin	ANGLE
RC ENV~1	Max	Cent	1.2	0.6	0.9	1.6	0.1	-30.22
		643	1.0	0.6	0.9	1.5	0.1	44.06
		644	1.0	0.6	0.9	1.5	-0.0	44.49
		652	1.5	0.6	0.9	1.8	0.2	-27.20
		651	1.5	0.6	0.9	1.8	0.3	-26.22
	Min	Cent	-0.9	-0.0	-1.5	0.4	-1.8	-80.54
		643	-0.8	-0.1	-1.5	0.4	-1.8	-81.30
		644	-0.8	-0.1	-1.5	0.3	-1.8	-80.40
		652	-1.1	-0.1	-1.5	0.3	-1.9	-79.65
		651	-1.1	-0.1	-1.5	0.5	-1.9	-80.68

	NODE	Mxx	Myy	Mxy	Mmax	Mmin	ANGLE
Max	Cent	-2.4	0.2	0.0	0.2	-2.6	89.66
	643	-1.9	-1.2	-0.1	-1.2	-3.1	-88.48
	644	-3.8	-1.5	0.0	-1.5	-4.0	89.60
	652	-3.0	1.5	0.1	1.6	-3.0	88.59
	651	-1.1	1.7	0.0	1.7	-1.2	89.58
Min	Cent	-12.3	-4.1	-2.6	-3.6	-12.9	-76.80
	643	-12.0	-5.9	-2.6	-5.3	-12.7	-74.33
	644	-13.3	-6.1	-2.6	-5.6	-14.0	-74.46
	652	-12.5	-2.6	-2.6	-1.9	-13.0	-79.06
	651	-11.4	-2.5	-2.6	-1.7	-11.9	-79.74

	NODE	Vxx	Vyy
Max	Cent	3.4	-5.1
	643	3.4	-4.9
	644	3.4	-5.3
	652	3.3	-5.3
	651	3.3	-4.9

	Min	Cent	0.0	-7.2
		643	0.2	-7.2
		644	0.2	-7.2
		652	-0.1	-7.2
		651	-0.1	-7.2

LC		NODE	Fxx	Fyy	Fxy	Fmax	Fmin	ANGLE
RC ENV~2	Max	Cent	0.8	0.4	-0.2	1.1	-0.0	-31.72
		643	0.7	0.5	-0.2	1.0	-0.1	-35.36
		644	0.7	0.4	-0.2	1.0	-0.0	-36.54
		652	1.0	0.4	-0.2	1.3	0.1	-28.49
		651	1.0	0.5	-0.2	1.3	0.0	-27.59
	Min	Cent	-0.4	0.2	-0.5	0.3	-0.5	-78.45
		643	-0.5	0.2	-0.5	0.3	-0.6	-79.46
		644	-0.5	0.2	-0.5	0.3	-0.6	-78.41
		652	-0.4	0.2	-0.5	0.3	-0.4	-77.25
		651	-0.4	0.2	-0.5	0.3	-0.4	-78.49

	NODE	Mxx	Myy	Mxy	Mmax	Mmin	ANGLE
Max	Cent	-5.0	-2.0	-0.8	-1.8	-5.2	-75.92
	643	-4.9	-3.3	-0.8	-2.9	-5.3	-62.07
	644	-6.0	-3.6	-0.7	-3.4	-6.2	-69.32
	652	-5.1	-0.5	-0.7	-0.4	-5.3	-81.13
	651	-4.2	-0.4	-0.8	-0.2	-4.4	-77.80
Min	Cent	-8.7	-2.9	-1.8	-2.7	-9.1	-77.02
	643	-8.5	-4.3	-1.8	-3.9	-9.0	-74.03
	644	-9.5	-4.5	-1.8	-4.2	-10.0	-74.63
	652	-8.9	-1.5	-1.8	-1.3	-9.2	-79.51
	651	-8.0	-1.4	-1.8	-1.2	-8.4	-79.86

	NODE	Vxx	Vyy
Max	Cent	2.4	-5.2
	643	2.5	-5.1
	644	2.5	-5.4
	652	2.4	-5.4
	651	2.4	-5.1
Min	Cent	1.2	-5.5
	643	1.3	-5.5
	644	1.3	-5.6
	652	1.1	-5.6
	651	1.1	-5.5

ELEM	MAT	SEC	LC		NODE	Fxx	Fyy	Fxy	Fmax	Fmin	ANGLE
614	1	1	SX	(RS)	Cent	0.6	0.2	0.9	1.3	-0.5	39.01
					644	0.5	0.3	0.9	1.3	-0.5	40.98
					645	0.5	0.2	0.9	1.2	-0.6	39.61
					653	0.7	0.2	0.9	1.3	-0.5	37.16
					652	0.7	0.3	0.9	1.4	-0.5	38.48

	NODE	Mxx	Myy	Mxy	Mmax	Mmin	ANGLE
	Cent	1.8	0.3	0.2	1.8	0.3	5.91
	644	2.2	0.3	0.2	2.3	0.3	6.38
	645	1.4	0.3	0.1	1.4	0.3	5.89
	653	1.3	0.3	0.1	1.3	0.3	5.74
	652	2.3	0.5	0.2	2.3	0.4	6.11

	NODE	Vxx	Vyy
	Cent	1.8	0.3
	644	1.7	0.2
	645	1.7	0.4
	653	1.8	0.4
	652	1.8	0.2

LC		NODE	Fxx	Fyy	Fxy	Fmax	Fmin	ANGLE
SY	(RS)	Cent	1.0	0.3	1.2	1.9	-0.5	37.24
		644	0.8	0.4	1.2	1.7	-0.6	39.95
		645	0.8	0.4	1.2	1.7	-0.6	40.13
		653	1.2	0.4	1.2	2.0	-0.4	35.34
		652	1.2	0.4	1.2	2.0	-0.5	35.18

	NODE	Mxx	Myy	Mxy	Mmax	Mmin	ANGLE
	Cent	0.8	2.2	0.9	2.7	0.3	64.47
	644	0.7	2.1	0.8	2.5	0.3	65.73
	645	0.7	2.5	0.9	2.8	0.3	68.19
	653	0.8	2.4	1.0	2.9	0.3	63.15
	652	0.8	2.1	1.0	2.6	0.3	60.76

	NODE	Vxx	Vyy
	Cent	0.3	0.2
	644	0.3	0.2
	645	0.3	0.3
	653	0.4	0.3
	652	0.4	0.2

LC		NODE	Fxx	Fyy	Fxy	Fmax	Fmin	ANGLE
RC ENV~1	Max	Cent	1.0	0.6	1.0	1.8	0.2	39.39
		644	0.8	0.6	1.0	1.7	0.1	43.01
		645	0.8	0.8	1.0	1.7	0.2	44.45
		653	1.3	0.8	1.0	2.1	0.3	36.74
		652	1.3	0.6	1.0	2.0	0.2	35.43
	Min	Cent	-0.9	-0.1	-1.3	0.4	-1.9	-87.17
		644	-0.8	-0.1	-1.3	0.3	-1.8	-87.40
		645	-0.8	-0.1	-1.3	0.4	-1.8	-87.55
		653	-1.1	-0.1	-1.3	0.4	-2.0	-86.90
		652	-1.1	-0.1	-1.3	0.3	-2.0	-86.66

	NODE	Mxx	Myy	Mxy	Mmax	Mmin	ANGLE
Max	Cent	-3.8	0.2	0.3	0.2	-3.9	86.79
	644	-3.8	-1.5	0.1	-1.5	-4.0	88.00
	645	-4.6	-1.2	0.3	-1.2	-4.7	86.19
	653	-3.8	1.9	0.4	1.9	-3.9	85.93
	652	-3.0	1.5	0.3	1.5	-3.1	87.12
Min	Cent	-12.4	-4.3	-2.6	-3.7	-13.1	-75.65
	644	-13.2	-6.1	-2.6	-5.6	-13.9	-74.29
	645	-12.4	-6.2	-2.6	-5.6	-13.2	-70.79
	653	-11.6	-2.8	-2.6	-2.1	-12.1	-66.60
	652	-12.6	-2.6	-2.6	-1.9	-13.1	-68.08

	NODE	Vxx	Vyy
Max	Cent	1.5	-5.4
	644	1.5	-5.3
	645	1.5	-5.5
	653	1.5	-5.5
	652	1.5	-5.3
Min	Cent	-2.0	-7.5
	644	-1.9	-7.2
	645	-1.9	-7.8
	653	-2.2	-7.8
	652	-2.2	-7.2

LC		NODE	Fxx	Fyy	Fxy	Fmax	Fmin	ANGLE
RC ENV~2	Max	Cent	0.6	0.5	-0.0	0.8	0.1	-36.20
		644	0.5	0.4	-0.0	0.7	0.0	-37.33
		645	0.5	0.6	-0.0	0.8	0.1	-44.86
		653	0.7	0.6	-0.0	0.9	0.2	-35.10
		652	0.7	0.4	-0.0	0.8	0.1	-28.91
	Min	Cent	-0.4	0.3	-0.3	0.3	-0.4	-85.81
		644	-0.5	0.2	-0.3	0.3	-0.5	-86.15
		645	-0.5	0.3	-0.3	0.3	-0.5	-86.41
		653	-0.3	0.3	-0.3	0.3	-0.3	-85.41
		652	-0.3	0.2	-0.3	0.3	-0.3	-84.97

	NODE	Mxx	Myy	Mxy	Mmax	Mmin	ANGLE
Max	Cent	-5.5	-2.1	-0.6	-1.9	-5.6	-80.29
	644	-5.9	-3.6	-0.6	-3.4	-6.1	-76.35
	645	-5.9	-3.7	-0.5	-3.4	-6.1	-72.19
	653	-5.0	-0.4	-0.6	-0.4	-5.1	-82.85
	652	-5.2	-0.5	-0.7	-0.4	-5.3	-82.08
Min	Cent	-8.9	-3.0	-1.8	-2.8	-9.3	-76.35

644	-9.5	-4.5	-1.8	-4.2	-9.9	-72.98
645	-8.9	-4.6	-1.8	-4.2	-9.4	-71.46
653	-8.2	-1.4	-1.7	-1.2	-8.6	-78.75
652	-8.9	-1.5	-1.8	-1.3	-9.3	-79.26

	NODE	Vxx	Vyy
Max	Cent	0.1	-5.5
	644	0.2	-5.4
	645	0.2	-5.6
	653	0.1	-5.6
	652	0.1	-5.4
Min	Cent	-1.2	-5.8
	644	-1.1	-5.6
	645	-1.1	-6.0
	653	-1.3	-6.0
	652	-1.3	-5.6

ELEM	MAT	SEC	LC		NODE	Fxx	Fyy	Fxy	Fmax	Fmin	ANGLE
615	1	1	SX	(RS)	Cent	0.2	0.1	1.0	1.2	-0.9	44.37
					645	0.2	0.2	1.0	1.2	-0.8	44.38
					646	0.2	0.2	1.0	1.2	-0.8	44.02
					654	0.3	0.2	1.0	1.3	-0.8	43.29
					653	0.3	0.2	1.0	1.3	-0.8	43.65

	NODE	Mxx	Myy	Mxy	Mmax	Mmin	ANGLE
	Cent	0.8	0.3	0.1	0.9	0.3	9.06
	645	1.3	0.3	0.1	1.3	0.3	4.05
	646	0.7	0.3	0.2	0.7	0.3	20.27
	654	0.4	0.3	0.1	0.5	0.2	33.46
	653	1.3	0.4	0.0	1.3	0.3	2.08

	NODE	Vxx	Vyy
	Cent	1.9	0.6
	645	1.7	0.4
	646	1.7	0.8
	654	2.1	0.8
	653	2.1	0.4

LC		NODE	Fxx	Fyy	Fxy	Fmax	Fmin	ANGLE
SY	(RS)	Cent	1.2	0.4	1.3	2.1	-0.5	36.94
		645	1.0	0.4	1.3	2.0	-0.6	38.66
		646	1.0	0.5	1.3	2.0	-0.6	39.40
		654	1.4	0.5	1.3	2.3	-0.4	35.27
		653	1.4	0.4	1.3	2.3	-0.5	34.60

	NODE	Mxx	Myy	Mxy	Mmax	Mmin	ANGLE
	Cent	0.9	2.7	1.0	3.1	0.5	66.51
	645	0.8	2.4	0.8	2.8	0.5	66.37
	646	0.7	3.4	0.7	3.6	0.5	75.38
	654	1.2	2.8	1.1	3.3	0.6	63.42
	653	0.9	2.3	1.1	2.9	0.3	60.20

	NODE	Vxx	Vyy
	Cent	0.5	0.7
	645	0.1	0.3
	646	0.1	1.0
	654	1.1	1.0
	653	1.1	0.3

LC		NODE	Fxx	Fyy	Fxy	Fmax	Fmin	ANGLE
RC ENV~1	Max	Cent	1.2	0.8	1.3	2.2	0.3	40.76
		645	0.9	0.7	1.3	2.1	0.2	42.92
		646	0.9	0.9	1.3	2.1	0.3	44.44
		654	1.4	0.9	1.3	2.4	0.3	38.65
		653	1.4	0.7	1.3	2.4	0.3	37.21
	Min	Cent	-1.2	-0.1	-1.3	0.5	-2.0	84.78
		645	-1.1	-0.1	-1.3	0.4	-2.0	-75.62
		646	-1.1	-0.1	-1.3	0.5	-2.0	85.97

654	-1.3	-0.1	-1.3	0.5	-2.1	83.60
653	-1.3	-0.1	-1.3	0.4	-2.1	82.62

	NODE	Mxx	Myy	Mxy	Mmax	Mmin	ANGLE
Max	Cent	-4.0	0.7	0.5	0.8	-4.0	84.25
	645	-4.5	-1.3	0.3	-1.2	-4.7	84.87
	646	-4.0	-0.4	0.3	-0.3	-4.1	85.05
	654	-2.6	2.7	0.6	2.8	-2.6	83.51
	653	-3.8	1.8	0.6	1.9	-3.9	84.17
Min	Cent	-10.3	-4.7	-2.6	-3.7	-11.1	-55.28
	645	-12.2	-6.2	-2.6	-5.5	-13.0	-69.82
	646	-9.2	-7.2	-2.6	-5.1	-10.5	-57.82
	654	-8.2	-2.8	-2.6	-2.0	-9.0	-62.48
	653	-11.7	-2.8	-2.6	-2.1	-12.3	-67.33

	NODE	Vxx	Vyy
Max	Cent	-0.2	-5.7
	645	-0.2	-5.5
	646	-0.2	-5.7
	654	-0.2	-5.7
	653	-0.2	-5.5
Min	Cent	-5.8	-8.6
	645	-5.4	-7.8
	646	-5.4	-9.4
	654	-6.1	-9.4
	653	-6.1	-7.8

LC		NODE	Fxx	Fyy	Fxy	Fmax	Fmin	ANGLE
RC ENV~2	Max	Cent	0.3	0.6	0.1	0.6	0.2	-75.08
		645	0.3	0.5	0.1	0.5	0.1	-75.44
		646	0.3	0.7	0.1	0.7	0.2	-78.66
		654	0.4	0.7	0.1	0.7	0.2	-74.71
		653	0.4	0.5	0.1	0.6	0.2	-48.26
	Min	Cent	-0.3	0.3	-0.2	0.3	-0.3	88.39
		645	-0.4	0.3	-0.2	0.3	-0.4	-87.26
		646	-0.4	0.4	-0.2	0.4	-0.4	86.49
		654	-0.1	0.4	-0.2	0.4	-0.2	84.56
		653	-0.1	0.3	-0.2	0.3	-0.2	-86.04

	NODE	Mxx	Myy	Mxy	Mmax	Mmin	ANGLE
Max	Cent	-4.8	-2.0	-0.5	-1.7	-4.9	-73.28
	645	-5.8	-3.7	-0.5	-3.4	-5.9	-72.17
	646	-4.7	-3.7	-0.4	-3.0	-4.9	-65.65
	654	-3.7	-0.0	-0.4	0.3	-3.8	-74.63
	653	-5.1	-0.4	-0.5	-0.4	-5.1	-79.83
Min	Cent	-7.4	-2.9	-1.7	-2.5	-7.9	-72.41
	645	-8.7	-4.6	-1.7	-4.2	-9.3	-70.63
	646	-6.7	-4.6	-1.7	-3.9	-7.5	-58.27
	654	-5.9	-0.9	-1.7	-0.5	-6.3	-74.47
	653	-8.3	-1.4	-1.7	-1.2	-8.7	-78.44

	NODE	Vxx	Vyy
Max	Cent	-2.0	-5.9
	645	-1.8	-5.6
	646	-1.8	-6.3
	654	-2.2	-6.3
	653	-2.2	-5.6
Min	Cent	-4.1	-6.6
	645	-3.8	-6.0
	646	-3.8	-7.2
	654	-4.3	-7.2
	653	-4.3	-6.0

ELEM	MAT	SEC	LC		NODE	Fxx	Fyy	Fxy	Fmax	Fmin	ANGLE
616	1	1	SX (RS)		Cent	0.3	0.3	1.4	1.6	-1.1	44.58
					646	0.3	0.1	1.4	1.6	-1.2	43.66
					647	0.3	0.5	1.4	1.8	-1.0	47.55
					655	0.8	0.5	1.4	2.0	-0.7	41.70
					654	0.8	0.1	1.4	1.9	-0.9	37.93

	NODE	Mxx	Myy	Mxy	Mmax	Mmin	ANGLE

	Cent	0.7	0.2	0.3	0.8	0.1	25.76
	646	0.6	0.3	0.3	0.8	0.2	30.03
	647	0.6	0.6	0.4	1.0	0.2	47.86
	655	1.7	1.0	0.4	1.9	0.8	24.10
	654	0.4	0.3	0.2	0.6	0.1	41.61

	NODE	Vxx	Vyy
	Cent	1.7	1.7
	646	0.8	0.8
	647	0.8	2.6
	655	2.6	2.6
	654	2.6	0.8

LC		NODE	Fxx	Fyy	Fxy	Fmax	Fmin	ANGLE
SY (RS)		Cent	1.4	1.4	1.8	3.2	-0.5	44.91
		646	0.9	0.5	1.8	2.5	-1.1	41.82
		647	0.9	2.4	1.8	3.6	-0.3	55.94
		655	1.9	2.4	1.8	4.0	0.3	48.44
		654	1.9	0.5	1.8	3.2	-0.7	34.29

	NODE	Mxx	Myy	Mxy	Mmax	Mmin	ANGLE
	Cent	0.9	3.9	0.6	4.0	0.8	78.43
	646	1.0	3.3	0.4	3.4	1.0	79.99
	647	0.7	4.2	0.4	4.3	0.7	84.27
	655	1.1	5.4	1.0	5.6	0.9	77.79
	654	1.8	2.6	1.0	3.3	1.1	56.40

	NODE	Vxx	Vyy
	Cent	1.9	0.5
	646	0.8	1.0
	647	0.8	2.0
	655	3.0	2.0
	654	3.0	1.0

LC		NODE	Fxx	Fyy	Fxy	Fmax	Fmin	ANGLE
RC ENV~1	Max	Cent	1.3	2.0	2.0	3.7	0.3	49.43
		646	0.7	0.9	2.0	2.8	0.2	46.25
		647	0.7	3.2	2.0	4.3	0.3	60.92
		655	2.1	3.2	2.0	4.7	0.6	52.88
		654	2.1	0.9	2.0	3.6	0.3	36.78
	Min	Cent	-1.4	-0.8	-1.6	0.6	-2.8	-50.60
		646	-1.1	-0.1	-1.6	0.5	-2.3	-69.53
		647	-1.1	-1.6	-1.6	0.3	-3.0	-41.23
		655	-1.8	-1.6	-1.6	-0.1	-3.3	-47.22
		654	-1.8	-0.1	-1.6	0.5	-2.8	-65.42

		NODE	Mxx	Myy	Mxy	Mmax	Mmin	ANGLE
	Max	Cent	-2.1	2.0	0.3	2.0	-2.2	86.02
		646	-3.4	-0.4	0.1	-0.4	-3.4	87.62
		647	-2.1	-0.1	0.3	-0.1	-2.1	84.02
		655	0.6	5.8	0.6	5.9	0.6	83.91
		654	-2.1	2.6	0.5	2.6	-2.1	83.68
	Min	Cent	-6.2	-5.8	-2.7	-3.6	-7.6	-23.52
		646	-9.0	-7.0	-2.5	-5.2	-10.2	-21.35
		647	-4.7	-8.6	-2.5	-3.6	-8.6	-5.63
		655	-2.9	-5.1	-2.8	-1.7	-5.6	-21.79
		654	-8.4	-2.7	-2.8	-2.1	-9.3	-67.10

		NODE	Vxx	Vyy
	Max	Cent	-2.0	-5.9
		646	-2.3	-5.7
		647	-2.3	-5.8
		655	-1.7	-5.8
		654	-1.7	-5.7
	Min	Cent	-10.0	-11.0
		646	-8.5	-9.4
		647	-8.5	-12.6
		655	-11.5	-12.6
		654	-11.5	-9.4

LC		NODE	Fxx	Fyy	Fxy	Fmax	Fmin	ANGLE
RC ENV~2	Max	Cent	0.2	1.1	0.5	1.2	0.2	71.35
		646	0.2	0.6	0.5	0.8	0.1	70.93
		647	0.2	1.5	0.5	1.6	0.2	77.77
		655	0.3	1.5	0.5	1.7	0.2	71.75
		654	0.3	0.6	0.5	1.0	0.2	56.56
	Min	Cent	-0.2	0.5	-0.1	0.5	-0.4	-83.68
		646	-0.6	0.4	-0.1	0.4	-0.8	-81.13
		647	-0.6	0.6	-0.1	0.6	-0.7	-74.73
		655	0.1	0.6	-0.1	0.6	0.0	-75.72
		654	0.1	0.4	-0.1	0.4	-0.1	-76.74

		NODE	Mxx	Myy	Mxy	Mmax	Mmin	ANGLE
	Max	Cent	-2.9	-1.7	-0.3	-1.0	-3.1	-64.08
		646	-4.4	-3.7	-0.3	-3.0	-4.5	-65.32
		647	-2.4	-3.9	-0.1	-2.0	-4.3	-33.70
		655	-0.5	0.9	-0.3	1.6	-1.0	-63.15
		654	-3.8	-0.0	-0.5	0.3	-3.9	-74.39
	Min	Cent	-4.5	-2.8	-1.8	-2.0	-5.3	-69.32
		646	-6.5	-4.6	-1.7	-3.7	-7.2	-53.95
		647	-3.5	-5.3	-1.6	-2.9	-5.6	-6.37
		655	-2.1	-0.4	-1.8	0.3	-2.9	-73.02
		654	-6.0	-0.9	-1.9	-0.4	-6.5	-72.72

		NODE	Vxx	Vyy
	Max	Cent	-3.8	-6.9
		646	-3.0	-6.3
		647	-3.0	-7.5
		655	-4.6	-7.5
		654	-4.6	-6.3
	Min	Cent	-7.0	-8.4
		646	-5.9	-7.2
		647	-5.9	-9.6
		655	-8.2	-9.6
		654	-8.2	-7.2

ELEM	MAT	SEC	LC		NODE	Fxx	Fyy	Fxy	Fmax	Fmin	ANGLE
617	1	1	SX (RS)		Cent	0.3	0.2	1.2	1.4	-1.0	43.38
					647	0.1	0.4	1.2	1.5	-0.9	48.29
					648	0.1	0.1	1.2	1.3	-1.1	44.26
					656	0.7	0.1	1.2	1.6	-0.8	37.24
					655	0.7	0.4	1.2	1.8	-0.6	41.11

		NODE	Mxx	Myy	Mxy	Mmax	Mmin	ANGLE
		Cent	0.2	0.1	0.7	0.9	-0.6	42.54
		647	0.4	0.7	0.9	1.4	-0.4	49.61
		648	0.8	0.2	0.5	1.0	-0.1	28.99
		656	3.4	0.7	0.4	3.5	0.6	8.72
		655	1.9	1.1	0.8	2.5	0.6	31.19

		NODE	Vxx	Vyy
		Cent	4.1	1.3
		647	0.9	2.6
		648	0.9	0.0
		656	8.9	0.0
		655	8.9	2.6

LC		NODE	Fxx	Fyy	Fxy	Fmax	Fmin	ANGLE
SY (RS)		Cent	1.2	3.1	1.1	3.6	0.7	65.38
		647	0.9	2.2	1.1	2.8	0.3	59.44
		648	0.9	4.1	1.1	4.4	0.6	72.36
		656	1.5	4.1	1.1	4.5	1.1	69.48
		655	1.5	2.2	1.1	3.0	0.7	53.00

		NODE	Mxx	Myy	Mxy	Mmax	Mmin	ANGLE
		Cent	0.8	5.0	0.2	5.0	0.8	87.34
		647	0.8	4.3	0.1	4.3	0.8	88.45

		648	0.8	3.5	0.3	3.5	0.8	83.14
		656	2.6	7.5	0.2	7.5	2.6	88.20
		655	2.8	4.8	0.2	4.8	2.7	83.77

	NODE	Vxx	Vyy
	Cent	4.3	4.5
	647	0.4	2.0
	648	0.4	7.1
	656	8.2	7.1
	655	8.2	2.0

LC		NODE	Fxx	Fyy	Fxy	Fmax	Fmin	ANGLE
RC ENV~1	Max	Cent	0.9	4.1	1.3	4.5	0.5	70.75
		647	0.7	2.9	1.3	3.5	0.1	66.04
		648	0.7	5.2	1.3	5.6	0.4	75.61
		656	1.3	5.2	1.3	5.6	0.9	73.92
		655	1.3	2.9	1.3	3.6	0.6	61.97
	Min	Cent	-1.5	-2.2	-1.0	-0.8	-2.8	-35.52
		647	-1.2	-1.4	-1.0	-0.4	-2.3	-42.42
		648	-1.2	-2.9	-1.0	-0.8	-3.3	-24.33
		656	-1.8	-2.9	-1.0	-1.3	-3.5	-30.17
		655	-1.8	-1.4	-1.0	-0.6	-2.6	-51.20

	NODE	Mxx	Myy	Mxy	Mmax	Mmin	ANGLE
Max	Cent	1.1	2.9	1.4	3.2	-0.1	74.30
	647	-1.9	0.0	1.3	0.1	-2.0	76.76
	648	1.8	-0.9	1.7	1.9	-2.3	-5.14
	656	5.7	7.3	1.3	7.6	3.6	73.68
	655	2.8	5.4	1.0	5.4	2.7	82.80
Min	Cent	-1.5	-7.1	-1.5	-1.5	-7.1	4.79
	647	-4.7	-8.6	-2.0	-4.0	-8.6	-14.77
	648	-2.2	-7.8	-0.8	-2.1	-8.0	8.60
	656	-2.1	-7.8	-1.1	-1.2	-7.9	6.72
	655	-2.8	-4.2	-2.3	-2.7	-4.2	-4.42

	NODE	Vxx	Vyy
Max	Cent	1.8	-3.1
	647	-1.5	-5.8
	648	-1.5	0.2
	656	6.3	0.2
	655	6.3	-5.8
Min	Cent	-10.5	-12.2
	647	-10.0	-12.6
	648	-10.0	-14.0
	656	-11.5	-14.0
	655	-11.5	-12.6

LC		NODE	Fxx	Fyy	Fxy	Fmax	Fmin	ANGLE
RC ENV~2	Max	Cent	0.1	1.7	0.4	1.8	0.1	81.12
		647	-0.0	1.4	0.4	1.5	-0.0	79.67
		648	-0.0	2.0	0.4	2.1	-0.0	82.01
		656	0.2	2.0	0.4	2.1	0.2	82.22
		655	0.2	1.4	0.4	1.5	0.2	80.02
	Min	Cent	-0.6	0.8	-0.1	0.8	-0.7	-83.67
		647	-0.6	0.6	-0.1	0.6	-0.6	-82.42
		648	-0.6	1.1	-0.1	1.1	-0.6	-85.78
		656	-0.7	1.1	-0.1	1.1	-0.7	-84.57
		655	-0.7	0.6	-0.1	0.6	-0.8	-77.58

	NODE	Mxx	Myy	Mxy	Mmax	Mmin	ANGLE
Max	Cent	0.6	-1.4	0.7	0.7	-1.6	-5.60
	647	-2.3	-3.9	0.4	-2.2	-4.2	-12.36
	648	0.9	-3.2	1.2	0.9	-3.2	-1.90
	656	3.9	0.5	0.9	3.9	0.4	-0.26
	655	1.2	1.1	0.2	1.7	0.4	-51.39
Min	Cent	-0.7	-2.8	-0.9	-0.5	-2.8	11.60
	647	-3.4	-5.3	-1.2	-3.1	-5.3	-5.51
	648	-1.4	-5.1	-0.3	-1.0	-5.1	19.23
	656	1.0	-0.8	-0.5	1.1	-0.8	14.31
	655	-1.0	-0.1	-1.4	0.4	-1.8	87.05

	NODE	Vxx	Vyy
Max	Cent	-2.3	-7.0
	647	-2.4	-7.5
	648	-2.4	-6.3
	656	-1.9	-6.3
	655	-1.9	-7.5
Min	Cent	-7.1	-8.4
	647	-6.7	-9.6
	648	-6.7	-7.2
	656	-7.6	-7.2
	655	-7.6	-9.6

ELEM	MAT	SEC	LC	NODE	Fxx	Fyy	Fxy	Fmax	Fmin	ANGLE
618	1	1	SX (RS)	Cent	6.0	0.6	3.4	7.7	-1.0	25.78
				192	0.2	0.5	3.4	3.7	-3.1	46.19
				649	0.2	0.9	3.4	4.0	-2.9	48.14
				51	12.0	0.9	3.4	13.0	-0.0	15.84
				14	12.0	0.5	3.4	12.9	-0.5	15.31

	NODE	Mxx	Myy	Mxy	Mmax	Mmin	ANGLE
	Cent	9.1	1.0	2.9	10.0	0.1	17.59
	192	3.6	1.1	7.0	9.4	-4.8	39.89
	649	5.5	0.7	0.7	5.6	0.7	7.97
	51	6.9	3.0	0.7	7.0	2.8	10.15
	14	27.3	2.6	6.4	28.8	1.0	13.61

	NODE	Vxx	Vyy
	Cent	10.6	0.8
	192	15.7	5.7
	649	15.7	6.5
	51	36.9	6.5
	14	36.9	5.7

LC	NODE	Fxx	Fyy	Fxy	Fmax	Fmin	ANGLE
SY (RS)	Cent	0.7	4.4	3.1	6.1	-1.1	60.77
	192	0.8	9.2	3.1	10.2	-0.2	71.90
	649	0.8	0.6	3.1	3.8	-2.3	44.09
	51	0.9	0.6	3.1	3.8	-2.3	43.74
	14	0.9	9.2	3.1	10.2	-0.1	71.78

	NODE	Mxx	Myy	Mxy	Mmax	Mmin	ANGLE
	Cent	1.0	6.4	2.1	7.1	0.3	71.26
	192	2.4	5.5	0.2	5.5	2.3	87.02
	649	0.6	3.4	0.5	3.4	0.6	80.82
	51	0.8	2.7	4.7	6.6	-3.1	50.77
	14	2.5	19.4	4.4	20.5	1.4	76.42

	NODE	Vxx	Vyy
	Cent	0.5	7.8
	192	4.5	27.0
	649	4.5	11.5
	51	3.5	11.5
	14	3.5	27.0

LC		NODE	Fxx	Fyy	Fxy	Fmax	Fmin	ANGLE
RC ENV~1	Max	Cent	6.7	6.1	2.2	8.4	1.4	-34.45
		192	0.7	12.6	2.2	12.8	0.4	81.50
		649	0.7	0.9	2.2	4.1	-0.4	-43.25
		51	13.5	0.9	2.2	13.9	0.6	9.54
		14	13.5	12.6	2.2	14.0	3.5	12.08
	Min	Cent	-5.4	-2.7	-4.7	2.6	-7.8	-80.34
		192	-1.0	-5.8	-4.7	1.5	-8.3	-30.34
		649	-1.0	-0.9	-4.7	0.6	-5.3	72.46
		51	-10.5	-0.9	-4.7	0.4	-12.4	-74.39
		14	-10.5	-5.8	-4.7	2.8	-11.9	-26.61

	NODE	Mxx	Myy	Mxy	Mmax	Mmin	ANGLE

Max	Cent	12.9	9.3	2.6	13.6	4.3	14.78
	192	8.8	5.4	6.3	12.4	5.3	29.21
	649	7.1	4.4	-0.0	7.1	2.2	-0.18
	51	7.5	8.8	4.8	10.6	7.1	62.62
	14	35.4	24.6	6.4	36.8	9.3	12.33
Min	Cent	-5.2	-3.5	-3.1	2.7	-6.4	87.13
	192	1.6	-5.5	-7.7	3.0	-7.5	-5.79
	649	-3.9	-2.3	-2.0	0.7	-4.3	-73.49
	51	-6.3	2.4	-4.7	2.5	-6.3	-85.29
	14	-19.2	-14.3	-6.4	4.3	-20.9	-74.84

	NODE	Vxx	Vyy
Max	Cent	22.3	-0.9
	192	22.7	18.2
	649	22.7	2.8
	51	50.4	2.8
	14	50.4	18.2
Min	Cent	-0.4	-16.5
	192	-8.8	-35.7
	649	-8.8	-20.1
	51	-23.4	-20.1
	14	-23.4	-35.7

LC		NODE	Fxx	Fyy	Fxy	Fmax	Fmin	ANGLE
RC ENV~2	Max	Cent	3.7	3.0	0.0	5.9	-0.1	-35.64
		192	-0.1	5.8	0.0	6.2	-0.2	-66.13
		649	-0.1	0.4	0.0	2.8	-0.2	-43.82
		51	7.5	0.4	0.0	8.6	-0.7	-18.72
		14	7.5	5.8	0.0	9.2	2.5	-28.76
	Min	Cent	-1.8	1.1	-3.0	2.0	-1.8	-77.75
		192	-0.3	2.7	-3.0	3.7	-1.8	-81.67
		649	-0.3	-0.4	-3.0	0.4	-3.3	87.41
		51	-3.4	-0.4	-3.0	0.4	-3.4	89.61
		14	-3.4	2.7	-3.0	3.7	-3.4	-83.14

	NODE	Mxx	Myy	Mxy	Mmax	Mmin	ANGLE
Max	Cent	6.6	3.0	0.7	6.8	2.9	-16.77
	192	5.9	0.5	1.7	6.4	0.2	14.59
	649	2.9	1.1	-0.2	3.0	0.8	-17.71
	51	1.8	6.6	1.0	6.7	1.8	81.88
	14	17.8	6.1	2.2	18.0	5.8	-6.72
Min	Cent	-0.5	2.2	-1.1	2.2	-0.5	87.17
	192	4.0	-1.7	-3.0	4.7	-2.4	-10.63
	649	-1.5	0.4	-1.4	1.0	-2.0	-69.50
	51	-3.0	3.8	-1.0	4.0	-3.0	-82.18
	14	-3.3	3.8	-2.0	4.3	-3.7	77.87

	NODE	Vxx	Vyy
Max	Cent	16.2	-7.8
	192	13.5	-8.4
	649	13.5	-5.7
	51	29.3	-5.7
	14	29.3	-8.4
Min	Cent	6.0	-10.9
	192	2.7	-10.9
	649	2.7	-12.2
	51	-1.1	-12.2
	14	-1.1	-10.9

ELEM	MAT	SEC	LC		NODE	Fxx	Fyy	Fxy	Fmax	Fmin	ANGLE
619	1	1	SX (RS)		Cent	3.5	1.0	1.1	3.9	0.5	21.30
					649	2.8	1.4	1.1	3.4	0.8	29.65
					650	2.8	0.6	1.1	3.3	0.1	22.80
					52	4.2	0.6	1.1	4.5	0.2	16.19
					51	4.2	1.4	1.1	4.6	1.0	20.00

	NODE	Mxx	Myy	Mxy	Mmax	Mmin	ANGLE
	Cent	5.0	1.0	0.6	5.1	0.9	8.45
	649	5.1	0.8	0.7	5.2	0.7	9.56
	650	4.4	1.0	0.7	4.6	0.8	10.49
	52	3.9	0.9	0.6	4.0	0.8	10.21

```
                    51        6.5        2.9        0.6        6.6        2.8       9.74

                  NODE        Vxx        Vyy
            ---- ------ ---------- ----------
                  Cent        2.9        3.3
                   649        1.8        6.5
                   650        1.8        0.1
                    52        4.0        0.1
                    51        4.0        6.5


      LC        NODE        Fxx        Fyy        Fxy       Fmax       Fmin      ANGLE
-------- ---- ------ ---------- ---------- ---------- ---------- ---------- ----------
      SY (RS)   Cent        0.6        0.5        1.4        1.9       -0.8      43.19
                 649        0.5        0.6        1.4        1.9       -0.8      46.67
                 650        0.5        0.7        1.4        2.0       -0.8      47.30
                  52        0.9        0.7        1.4        2.2       -0.6      42.29
                  51        0.9        0.6        1.4        2.2       -0.6      41.66

                  NODE        Mxx        Myy        Mxy       Mmax       Mmin      ANGLE
            ---- ------ ---------- ---------- ---------- ---------- ---------- ----------
                  Cent        0.6        1.4        1.1        2.2       -0.2      55.14
                   649        1.3        3.7        1.3        4.3        0.7      66.61
                   650        0.4        2.1        1.3        2.8       -0.3      61.06
                    52        1.0        2.3        0.8        2.7        0.6      63.48
                    51        0.9        2.8        0.8        3.1        0.6      69.79

                  NODE        Vxx        Vyy
            ---- ------ ---------- ----------
                  Cent        0.3        5.6
                   649        1.7       11.5
                   650        1.7        0.3
                    52        1.0        0.3
                    51        1.0       11.5


      LC        NODE        Fxx        Fyy        Fxy       Fmax       Fmin      ANGLE
-------- ---- ------ ---------- ---------- ---------- ---------- ---------- ----------
RC ENV~1  Max   Cent        3.9        1.2        0.9        4.1        1.0      13.62
                 649        3.3        1.4        0.9        3.5        1.2      18.93
                 650        3.3        1.0        0.9        3.5        0.7      15.68
                  52        4.6        1.0        0.9        4.7        0.8      10.55
                  51        4.6        1.4        0.9        4.8        1.3      12.04
           Min   Cent       -3.0       -0.8       -1.8        0.0       -3.8     -62.50
                 649       -2.3       -1.5       -1.8       -0.3       -3.5     -52.81
                 650       -2.3       -0.3       -1.8        0.6       -3.2     -62.09
                  52       -3.7       -0.3       -1.8        0.4       -4.3     -69.08
                  51       -3.7       -1.5       -1.8       -0.6       -4.5     -62.84

                  NODE        Mxx        Myy        Mxy       Mmax       Mmin      ANGLE
            ---- ------ ---------- ---------- ---------- ---------- ---------- ----------
           Max   Cent        4.6        4.0        0.2        4.7        3.4     -17.51
                 649        6.1        4.6        0.5        6.1        2.2      -0.83
                 650        2.1        2.0        0.4        2.1        0.9     -11.03
                  52        2.3        6.1       -0.3        6.1        2.1     -87.21
                  51        8.0        9.1       -0.3        9.5        7.8     -74.71
           Min   Cent       -5.5        1.1       -2.4        1.9       -6.0     -77.70
                 649       -4.1       -2.8       -2.1        0.6       -4.6     -71.85
                 650       -8.3       -2.1       -2.3       -1.1       -8.8     -80.35
                  52       -7.4        1.5       -2.6        2.3       -7.9     -67.94
                  51       -4.9        2.7       -2.4        3.1       -5.3     -77.85

                  NODE        Vxx        Vyy
            ---- ------ ---------- ----------
           Max   Cent       10.5       -2.2
                 649       10.4        2.8
                 650       10.4       -6.7
                  52       10.7       -6.7
                  51       10.7        2.8
           Min   Cent        2.5      -13.5
                 649        3.9      -20.1
                 650        3.9       -9.7
                  52        1.1       -9.7
                  51        1.1      -20.1


      LC        NODE        Fxx        Fyy        Fxy       Fmax       Fmin      ANGLE
-------- ---- ------ ---------- ---------- ---------- ---------- ---------- ----------
RC ENV~2  Max   Cent        2.2        0.6       -0.1        2.6       -0.1     -19.01
```

		649	1.9	0.5	-0.1	2.3	-0.2	-18.38
		650	1.9	0.7	-0.1	2.4	-0.0	-24.10
		52	2.6	0.7	-0.1	2.9	0.0	-19.68
		51	2.6	0.5	-0.1	2.8	-0.3	-15.51
	Min	Cent	-1.0	-0.3	-1.0	0.4	-1.0	-70.93
		649	-0.7	-0.6	-1.0	0.4	-1.0	-63.52
		650	-0.7	0.1	-1.0	0.5	-0.7	-69.81
		52	-1.2	0.1	-1.0	0.5	-1.2	-75.42
		51	-1.2	-0.6	-1.0	0.3	-1.2	-71.95

	NODE	Mxx	Myy	Mxy	Mmax	Mmin	ANGLE
Max	Cent	0.2	2.7	-0.8	3.2	-0.3	-67.09
	649	1.9	1.1	-0.5	2.5	0.4	-27.40
	650	-2.1	0.0	-0.7	0.5	-2.4	-65.54
	52	-1.4	3.8	-1.1	4.1	-1.6	-75.59
	51	2.9	6.8	-0.9	7.2	2.6	-74.98
Min	Cent	-3.6	1.9	-1.7	2.1	-3.9	-79.99
	649	-1.9	0.3	-1.5	0.8	-2.5	-56.06
	650	-5.7	-0.8	-1.6	-0.7	-6.1	-79.85
	52	-5.0	3.0	-1.8	3.2	-5.3	-81.20
	51	-1.9	4.0	-1.7	4.3	-2.2	-76.71

	NODE	Vxx	Vyy
Max	Cent	7.7	-6.3
	649	7.6	-5.7
	650	7.6	-6.9
	52	7.8	-6.9
	51	7.8	-5.7
Min	Cent	4.6	-9.8
	649	5.3	-12.2
	650	5.3	-7.4
	52	3.8	-7.4
	51	3.8	-12.2

ELEM	MAT	SEC	LC	NODE	Fxx	Fyy	Fxy	Fmax	Fmin	ANGLE
620	1	1	SX (RS)	Cent	2.2	0.6	0.7	2.5	0.3	20.66
				650	1.9	0.8	0.7	2.3	0.4	25.93
				651	1.9	0.3	0.7	2.2	0.0	20.97
				53	2.5	0.3	0.7	2.7	0.1	16.98
				52	2.5	0.8	0.7	2.8	0.5	20.41

NODE	Mxx	Myy	Mxy	Mmax	Mmin	ANGLE
Cent	3.8	0.7	0.5	3.8	0.7	9.08
650	4.3	0.9	0.5	4.4	0.8	8.65
651	3.2	0.5	0.5	3.3	0.4	9.12
53	3.3	0.6	0.5	3.4	0.6	9.78
52	4.3	1.0	0.5	4.3	0.9	8.92

NODE	Vxx	Vyy
Cent	1.7	0.2
650	1.8	0.1
651	1.8	0.3
53	1.7	0.3
52	1.7	0.1

LC	NODE	Fxx	Fyy	Fxy	Fmax	Fmin	ANGLE
SY (RS)	Cent	0.8	0.4	1.2	1.8	-0.6	39.56
	650	0.7	0.6	1.2	1.8	-0.5	44.25
	651	0.7	0.4	1.2	1.7	-0.6	40.84
	53	1.0	0.4	1.2	1.9	-0.5	37.24
	52	1.0	0.6	1.2	2.0	-0.4	40.52

NODE	Mxx	Myy	Mxy	Mmax	Mmin	ANGLE
Cent	0.8	1.9	1.1	2.6	0.1	58.31
650	0.5	2.1	1.0	2.6	0.0	64.21
651	0.7	1.9	1.0	2.4	0.1	60.91
53	1.1	1.5	1.2	2.5	0.1	49.26
52	1.0	2.3	1.3	3.1	0.2	58.28

NODE	Vxx	Vyy

		Cent	0.5	0.4
		650	0.5	0.3
		651	0.5	1.0
		53	0.6	1.0
		52	0.6	0.3

LC		NODE	Fxx	Fyy	Fxy	Fmax	Fmin	ANGLE
RC ENV~1	Max	Cent	2.5	0.8	0.8	2.6	0.7	12.96
		650	2.2	1.1	0.8	2.3	1.0	18.84
		651	2.2	0.5	0.8	2.3	0.4	12.83
		53	2.8	0.5	0.8	2.9	0.4	9.78
		52	2.8	1.1	0.8	2.9	1.0	13.14
	Min	Cent	-1.9	-0.3	-1.5	0.2	-2.4	-63.79
		650	-1.7	-0.5	-1.5	0.1	-2.3	-60.09
		651	-1.7	-0.2	-1.5	0.3	-2.2	-81.99
		53	-2.2	-0.2	-1.5	0.3	-2.6	-66.82
		52	-2.2	-0.5	-1.5	0.0	-2.7	-64.51

		NODE	Mxx	Myy	Mxy	Mmax	Mmin	ANGLE
	Max	Cent	0.9	3.7	0.2	3.7	0.7	88.45
		650	2.0	2.1	0.1	2.1	0.8	-20.43
		651	-1.2	1.4	0.0	1.4	-1.4	89.50
		53	-0.1	5.1	0.3	5.1	-0.1	87.80
		52	2.7	6.1	0.3	6.1	2.6	87.22
	Min	Cent	-9.3	-0.2	-2.5	0.7	-9.8	-65.31
		650	-8.2	-2.1	-2.5	-1.0	-8.8	-77.21
		651	-11.3	-2.4	-2.5	-1.6	-11.9	-80.23
		53	-10.3	2.1	-2.4	2.7	-10.6	-73.79
		52	-7.5	1.5	-2.4	2.5	-7.9	-66.11

		NODE	Vxx	Vyy
	Max	Cent	6.6	-6.8
		650	6.8	-6.7
		651	6.8	-6.5
		53	6.3	-6.5
		52	6.3	-6.7
	Min	Cent	1.7	-10.0
		650	1.8	-9.7
		651	1.8	-10.4
		53	1.5	-10.4
		52	1.5	-9.7

LC		NODE	Fxx	Fyy	Fxy	Fmax	Fmin	ANGLE
RC ENV~2	Max	Cent	1.5	0.5	-0.2	1.7	-0.0	-19.63
		650	1.3	0.7	-0.2	1.6	0.0	-21.05
		651	1.3	0.3	-0.2	1.6	-0.1	-21.35
		53	1.6	0.3	-0.2	1.8	-0.1	-18.36
		52	1.6	0.7	-0.2	1.8	0.1	-18.12
	Min	Cent	-0.6	-0.0	-0.6	0.4	-0.6	-67.39
		650	-0.6	-0.0	-0.6	0.5	-0.6	-71.28
		651	-0.6	0.0	-0.6	0.3	-0.6	-79.33
		53	-0.7	0.0	-0.6	0.2	-0.7	-80.37
		52	-0.7	-0.0	-0.6	0.5	-0.7	-71.39

		NODE	Mxx	Myy	Mxy	Mmax	Mmin	ANGLE
	Max	Cent	-2.7	1.8	-0.9	2.0	-2.9	-75.18
		650	-2.0	0.0	-0.9	0.6	-2.4	-64.07
		651	-4.2	-0.5	-0.8	-0.3	-4.4	-76.84
		53	-3.2	3.6	-0.8	3.7	-3.3	-82.53
		52	-1.3	3.9	-0.9	4.1	-1.4	-76.59
	Min	Cent	-6.5	1.0	-1.7	1.1	-6.8	-81.47
		650	-5.6	-0.8	-1.8	-0.6	-6.1	-76.78
		651	-8.0	-1.3	-1.8	-1.1	-8.3	-80.17
		53	-7.1	2.8	-1.7	3.0	-7.4	-83.81
		52	-5.1	3.0	-1.7	3.2	-5.3	-82.61

		NODE	Vxx	Vyy
	Max	Cent	4.8	-7.1
		650	5.0	-6.9
		651	5.0	-7.3

		53	4.6	-7.3	
		52	4.6	-6.9	
	Min	Cent	3.0	-7.6	
		650	3.2	-7.4	
		651	3.2	-7.9	
		53	2.8	-7.9	
		52	2.8	-7.4	

ELEM	MAT	SEC	LC		NODE	Fxx	Fyy	Fxy	Fmax	Fmin	ANGLE
621	1	1	SX (RS)		Cent	1.4	0.3	0.7	1.7	-0.0	25.04
					651	1.2	0.5	0.7	1.6	0.1	30.04
					652	1.2	0.1	0.7	1.6	-0.2	25.47
					54	1.6	0.1	0.7	1.9	-0.1	21.59
					53	1.6	0.5	0.7	1.9	0.1	25.15

	NODE	Mxx	Myy	Mxy	Mmax	Mmin	ANGLE
	Cent	2.8	0.4	0.3	2.8	0.4	7.84
	651	3.2	0.5	0.4	3.3	0.4	7.63
	652	2.3	0.3	0.3	2.3	0.3	8.22
	54	2.3	0.4	0.3	2.3	0.3	8.33
	53	3.4	0.6	0.4	3.4	0.6	7.71

	NODE	Vxx	Vyy
	Cent	1.8	0.2
	651	1.7	0.3
	652	1.7	0.1
	54	1.8	0.1
	53	1.8	0.3

LC		NODE	Fxx	Fyy	Fxy	Fmax	Fmin	ANGLE
SY (RS)		Cent	1.1	0.3	0.9	1.7	-0.3	33.72
		651	0.9	0.4	0.9	1.6	-0.3	36.54
		652	0.9	0.3	0.9	1.6	-0.4	36.05
		54	1.3	0.3	0.9	1.9	-0.3	31.17
		53	1.3	0.4	0.9	1.9	-0.2	31.60

	NODE	Mxx	Myy	Mxy	Mmax	Mmin	ANGLE
	Cent	1.0	1.7	1.1	2.5	0.2	54.76
	651	0.8	1.9	1.0	2.5	0.2	59.09
	652	0.8	1.9	1.0	2.5	0.1	58.76
	54	1.2	1.7	1.1	2.6	0.3	51.29
	53	1.1	1.5	1.1	2.4	0.2	49.58

	NODE	Vxx	Vyy
	Cent	0.4	0.7
	651	0.2	1.0
	652	0.2	0.5
	54	0.5	0.5
	53	0.5	1.0

LC		NODE	Fxx	Fyy	Fxy	Fmax	Fmin	ANGLE
RC ENV~1	Max	Cent	1.6	0.5	0.7	1.8	0.3	19.41
		651	1.4	0.6	0.7	1.6	0.4	24.71
		652	1.4	0.5	0.7	1.6	0.1	-21.24
		54	1.8	0.5	0.7	1.9	0.2	16.15
		53	1.8	0.6	0.7	2.0	0.4	19.02
	Min	Cent	-1.2	-0.2	-1.1	0.3	-1.7	-83.42
		651	-1.1	-0.3	-1.1	0.2	-1.7	-56.44
		652	-1.1	-0.2	-1.1	0.2	-1.6	-82.71
		54	-1.4	-0.2	-1.1	0.2	-1.8	-82.85
		53	-1.4	-0.3	-1.1	0.2	-1.9	-60.18

		NODE	Mxx	Myy	Mxy	Mmax	Mmin	ANGLE
	Max	Cent	-1.5	3.2	0.3	3.2	-1.6	87.63
		651	-1.1	1.4	0.2	1.4	-1.3	88.25
		652	-3.0	1.2	0.3	1.2	-3.1	87.08
		54	-1.9	5.2	0.4	5.2	-1.9	87.23
		53	-0.0	5.1	0.3	5.1	-0.1	88.02

Min	Cent	-11.4	-0.2	-2.5	0.4	-11.9	-71.68
	651	-11.4	-2.4	-2.5	-1.6	-11.9	-79.96
	652	-12.5	-2.5	-2.5	-1.9	-13.0	-79.35
	54	-11.4	1.8	-2.4	2.3	-11.7	-76.14
	53	-10.5	2.1	-2.5	2.6	-10.9	-74.98

	NODE	Vxx	Vyy
Max	Cent	3.2	-6.8
	651	3.3	-6.5
	652	3.3	-7.1
	54	3.2	-7.1
	53	3.2	-6.5
Min	Cent	-0.3	-10.3
	651	-0.1	-10.4
	652	-0.1	-10.3
	54	-0.5	-10.3
	53	-0.5	-10.4

LC		NODE	Fxx	Fyy	Fxy	Fmax	Fmin	ANGLE
RC ENV~2	Max	Cent	1.0	0.3	-0.1	1.2	-0.0	-19.14
		651	0.9	0.3	-0.1	1.1	-0.0	-19.01
		652	0.9	0.2	-0.1	1.1	0.0	-22.39
		54	1.1	0.2	-0.1	1.3	0.1	-19.28
		53	1.1	0.3	-0.1	1.2	-0.0	-16.62
	Min	Cent	-0.4	0.1	-0.4	0.2	-0.4	-81.29
		651	-0.4	-0.0	-0.4	0.3	-0.4	-66.28
		652	-0.4	0.1	-0.4	0.2	-0.4	-80.45
		54	-0.4	0.1	-0.4	0.2	-0.4	-80.53
		53	-0.4	-0.0	-0.4	0.3	-0.4	-64.03

	NODE	Mxx	Myy	Mxy	Mmax	Mmin	ANGLE
Max	Cent	-4.2	1.5	-0.8	1.6	-4.3	-82.08
	651	-4.2	-0.5	-0.8	-0.3	-4.4	-77.64
	652	-5.2	-0.7	-0.7	-0.6	-5.3	-81.12
	54	-4.1	3.5	-0.7	3.6	-4.1	-84.62
	53	-3.2	3.6	-0.8	3.7	-3.3	-83.13
Min	Cent	-8.0	0.7	-1.7	0.9	-8.3	-82.42
	651	-8.0	-1.3	-1.7	-1.1	-8.4	-80.03
	652	-8.9	-1.5	-1.7	-1.3	-9.2	-79.75
	54	-8.0	2.7	-1.7	2.9	-8.2	-83.38
	53	-7.3	2.8	-1.7	3.0	-7.5	-83.60

	NODE	Vxx	Vyy
Max	Cent	2.3	-7.4
	651	2.4	-7.3
	652	2.4	-7.5
	54	2.2	-7.5
	53	2.2	-7.3
Min	Cent	1.0	-7.9
	651	1.1	-7.9
	652	1.1	-7.9
	54	0.8	-7.9
	53	0.8	-7.9

ELEM	MAT	SEC	LC		NODE	Fxx	Fyy	Fxy	Fmax	Fmin	ANGLE
622	1	1	SX	(RS)	Cent	0.8	0.1	0.7	1.2	-0.3	32.92
					652	0.7	0.2	0.7	1.2	-0.3	36.15
					653	0.7	0.2	0.7	1.2	-0.3	35.67
					55	0.9	0.2	0.7	1.3	-0.3	32.07
					54	0.9	0.2	0.7	1.3	-0.2	32.50

	NODE	Mxx	Myy	Mxy	Mmax	Mmin	ANGLE
	Cent	1.8	0.3	0.2	1.8	0.3	5.93
	652	2.3	0.3	0.2	2.3	0.3	5.49
	653	1.3	0.2	0.1	1.3	0.2	5.98
	55	1.2	0.3	0.1	1.2	0.3	8.31
	54	2.3	0.4	0.2	2.4	0.4	5.97

	NODE	Vxx	Vyy
	Cent	1.9	0.2

	652	1.8	0.1	
	653	1.8	0.3	
	55	1.9	0.3	
	54	1.9	0.1	

LC		NODE	Fxx	Fyy	Fxy	Fmax	Fmin	ANGLE
SY (RS)		Cent	1.4	0.3	0.9	1.9	-0.2	29.94
		652	1.2	0.3	0.9	1.8	-0.3	32.78
		653	1.2	0.3	0.9	1.8	-0.3	32.74
		55	1.6	0.3	0.9	2.1	-0.2	27.48
		54	1.6	0.3	0.9	2.1	-0.2	27.52

	NODE	Mxx	Myy	Mxy	Mmax	Mmin	ANGLE
	Cent	0.9	1.8	1.2	2.6	0.1	54.12
	652	0.8	1.8	1.1	2.6	0.1	57.13
	653	0.8	2.1	1.2	2.9	0.1	59.16
	55	1.0	1.4	1.3	2.5	-0.1	48.49
	54	1.2	1.7	1.2	2.7	0.2	50.86

	NODE	Vxx	Vyy
	Cent	0.6	1.0
	652	0.4	0.5
	653	0.4	1.6
	55	0.9	1.6
	54	0.9	0.5

LC		NODE	Fxx	Fyy	Fxy	Fmax	Fmin	ANGLE
RC ENV~1	Max	Cent	1.5	0.5	0.8	2.0	0.2	29.24
		652	1.3	0.5	0.8	1.8	0.1	32.39
		653	1.3	0.5	0.8	1.8	0.3	32.98
		55	1.8	0.5	0.8	2.2	0.3	26.55
		54	1.8	0.5	0.8	2.2	0.2	26.10
	Min	Cent	-1.3	-0.2	-1.0	0.2	-1.9	87.79
		652	-1.1	-0.2	-1.0	0.2	-1.7	-80.23
		653	-1.1	-0.1	-1.0	0.2	-1.7	87.79
		55	-1.5	-0.1	-1.0	0.2	-2.0	87.46
		54	-1.5	-0.2	-1.0	0.2	-2.0	-75.30

	NODE	Mxx	Myy	Mxy	Mmax	Mmin	ANGLE
Max	Cent	-2.9	3.3	0.6	3.3	-2.9	84.85
	652	-3.0	1.2	0.5	1.2	-3.1	85.38
	653	-3.8	1.6	0.7	1.6	-3.9	83.57
	55	-2.7	5.2	0.8	5.3	-2.7	84.42
	54	-1.9	5.2	0.6	5.2	-2.0	85.95
Min	Cent	-11.5	-0.2	-2.4	0.3	-11.9	-72.82
	652	-12.6	-2.5	-2.5	-1.9	-13.1	-78.89
	653	-11.6	-2.7	-2.5	-1.9	-12.1	-65.67
	55	-10.3	2.5	-2.4	2.9	-10.6	-76.98
	54	-11.7	1.8	-2.4	2.2	-12.0	-76.74

	NODE	Vxx	Vyy
Max	Cent	1.5	-6.8
	652	1.5	-7.1
	653	1.5	-6.4
	55	1.4	-6.4
	54	1.4	-7.1
Min	Cent	-2.3	-10.5
	652	-2.2	-10.3
	653	-2.2	-10.9
	55	-2.5	-10.9
	54	-2.5	-10.3

LC		NODE	Fxx	Fyy	Fxy	Fmax	Fmin	ANGLE
RC ENV~2	Max	Cent	0.7	0.3	0.0	0.8	0.2	-20.88
		652	0.6	0.3	0.0	0.7	0.1	-20.12
		653	0.6	0.3	0.0	0.7	0.2	-26.03
		55	0.8	0.3	0.0	0.8	0.2	-21.69
		54	0.8	0.3	0.0	0.8	0.1	-17.19
	Min	Cent	-0.3	0.2	-0.2	0.2	-0.3	89.23

652	-0.3	0.1	-0.2	0.2	-0.3	-78.46
653	-0.3	0.1	-0.2	0.1	-0.3	89.24
55	-0.2	0.1	-0.2	0.1	-0.2	89.11
54	-0.2	0.1	-0.2	0.2	-0.2	-72.88

	NODE	Mxx	Myy	Mxy	Mmax	Mmin	ANGLE
Max	Cent	-4.6	1.5	-0.6	1.6	-4.6	-84.62
	652	-5.2	-0.7	-0.6	-0.6	-5.3	-82.07
	653	-5.0	-0.6	-0.6	-0.5	-5.1	-79.78
	55	-3.9	3.8	-0.5	3.9	-3.9	-86.32
	54	-4.2	3.5	-0.6	3.5	-4.2	-85.61
Min	Cent	-8.1	0.7	-1.6	0.9	-8.4	-81.83
	652	-8.9	-1.5	-1.7	-1.3	-9.3	-79.44
	653	-8.2	-1.4	-1.7	-1.2	-8.6	-79.07
	55	-7.2	3.1	-1.6	3.2	-7.4	-83.50
	54	-8.2	2.7	-1.6	2.8	-8.4	-83.63

	NODE	Vxx	Vyy
Max	Cent	-0.1	-7.7
	652	0.1	-7.5
	653	0.1	-7.8
	55	-0.2	-7.8
	54	-0.2	-7.5
Min	Cent	-1.4	-8.1
	652	-1.3	-7.9
	653	-1.3	-8.3
	55	-1.6	-8.3
	54	-1.6	-7.9

ELEM	MAT	SEC	LC	NODE	Fxx	Fyy	Fxy	Fmax	Fmin	ANGLE
623	1	1	SX (RS)	Cent	0.4	0.2	0.8	1.1	-0.5	41.93
				653	0.3	0.1	0.8	1.0	-0.6	42.39
				654	0.3	0.3	0.8	1.1	-0.5	45.41
				56	0.5	0.3	0.8	1.2	-0.4	42.35
				55	0.5	0.1	0.8	1.1	-0.5	39.39

	NODE	Mxx	Myy	Mxy	Mmax	Mmin	ANGLE
	Cent	0.7	0.3	0.1	0.7	0.3	10.80
	653	1.3	0.2	0.0	1.3	0.2	2.21
	654	0.5	0.5	0.1	0.6	0.4	44.51
	56	0.3	0.6	0.1	0.6	0.3	71.79
	55	1.3	0.3	0.1	1.3	0.3	6.56

	NODE	Vxx	Vyy
	Cent	2.1	0.3
	653	2.1	0.3
	654	2.1	0.3
	56	2.1	0.3
	55	2.1	0.3

LC	NODE	Fxx	Fyy	Fxy	Fmax	Fmin	ANGLE
SY (RS)	Cent	1.6	0.5	1.1	2.3	-0.2	31.66
	653	1.4	0.4	1.1	2.1	-0.4	32.74
	654	1.4	0.9	1.1	2.3	-0.0	38.51
	56	1.9	0.9	1.1	2.6	0.1	32.71
	55	1.9	0.4	1.1	2.5	-0.2	27.84

	NODE	Mxx	Myy	Mxy	Mmax	Mmin	ANGLE
	Cent	1.0	2.3	1.6	3.4	-0.1	55.73
	653	0.9	2.1	1.3	2.9	0.1	57.09
	654	1.2	2.7	1.5	3.6	0.3	58.31
	56	1.1	3.0	2.0	4.3	-0.1	57.95
	55	1.1	1.4	1.8	3.0	-0.5	47.51

	NODE	Vxx	Vyy
	Cent	1.3	0.6
	653	1.1	1.6
	654	1.1	0.5
	56	1.5	0.5

		55	1.5	1.6

LC		NODE	Fxx	Fyy	Fxy	Fmax	Fmin	ANGLE
RC ENV~1	Max	Cent	1.7	0.8	1.2	2.5	0.5	34.18
		653	1.4	0.5	1.2	2.2	0.3	34.56
		654	1.4	1.2	1.2	2.5	0.5	42.85
		56	2.0	1.2	1.2	2.8	0.6	36.05
		55	2.0	0.5	1.2	2.6	0.4	28.91
	Min	Cent	-1.6	-0.2	-1.1	0.4	-2.2	89.08
		653	-1.4	-0.2	-1.1	0.2	-2.0	5.77
		654	-1.4	-0.5	-1.1	0.2	-2.1	-55.79
		56	-1.8	-0.5	-1.1	0.1	-2.4	-60.48
		55	-1.8	-0.2	-1.1	0.3	-2.4	52.57

	NODE	Mxx	Myy	Mxy	Mmax	Mmin	ANGLE
Max	Cent	-2.9	4.1	1.2	4.3	-3.1	80.51
	653	-3.8	1.5	0.8	1.6	-3.9	82.35
	654	-2.6	2.5	1.1	2.7	-2.8	78.33
	56	-1.5	7.4	1.7	7.7	-1.8	79.62
	55	-2.8	5.1	1.4	5.4	-2.8	80.89
Min	Cent	-9.3	-0.4	-2.4	0.3	-9.8	-69.14
	653	-11.7	-2.7	-2.5	-1.9	-12.2	-67.29
	654	-8.2	-2.8	-2.5	-1.7	-8.9	-59.77
	56	-6.9	1.3	-2.4	2.2	-7.4	-68.77
	55	-10.7	2.4	-2.3	3.0	-11.1	-75.19

	NODE	Vxx	Vyy
Max	Cent	-0.4	-7.5
	653	-0.2	-6.4
	654	-0.2	-7.7
	56	-0.5	-7.7
	55	-0.5	-6.4
Min	Cent	-6.4	-11.0
	653	-6.1	-10.9
	654	-6.1	-11.1
	56	-6.7	-11.1
	55	-6.7	-10.9

LC		NODE	Fxx	Fyy	Fxy	Fmax	Fmin	ANGLE
RC ENV~2	Max	Cent	0.4	0.5	0.2	0.5	0.3	-86.41
		653	0.4	0.3	0.2	0.4	0.2	-25.57
		654	0.4	0.7	0.2	0.7	0.3	-88.43
		56	0.4	0.7	0.2	0.7	0.4	-87.84
		55	0.4	0.3	0.2	0.5	0.3	-21.68
	Min	Cent	-0.1	0.2	-0.1	0.3	-0.2	81.17
		653	-0.2	0.2	-0.1	0.2	-0.2	84.96
		654	-0.2	0.3	-0.1	0.3	-0.2	73.82
		56	-0.0	0.3	-0.1	0.4	-0.1	70.08
		55	-0.0	0.2	-0.1	0.2	-0.1	77.47

	NODE	Mxx	Myy	Mxy	Mmax	Mmin	ANGLE
Max	Cent	-3.9	1.9	-0.4	2.0	-3.9	-82.09
	653	-5.1	-0.6	-0.5	-0.5	-5.2	-80.28
	654	-3.7	-0.0	-0.4	0.2	-3.8	-75.43
	56	-2.6	4.4	-0.3	4.5	-2.6	-83.57
	55	-4.1	3.8	-0.4	3.8	-4.1	-87.17
Min	Cent	-6.6	1.1	-1.6	1.3	-6.9	-80.68
	653	-8.3	-1.4	-1.6	-1.2	-8.6	-78.96
	654	-5.9	-0.9	-1.6	-0.6	-6.3	-75.13
	56	-4.8	3.7	-1.6	3.9	-5.1	-81.98
	55	-7.5	3.1	-1.6	3.2	-7.7	-83.48

	NODE	Vxx	Vyy
Max	Cent	-2.4	-7.9
	653	-2.2	-7.8
	654	-2.2	-7.9
	56	-2.5	-7.9
	55	-2.5	-7.8
Min	Cent	-4.5	-8.4
	653	-4.3	-8.3
	654	-4.3	-8.5

56	-4.8	-8.5
55	-4.8	-8.3

ELEM	MAT	SEC	LC	NODE	Fxx	Fyy	Fxy	Fmax	Fmin	ANGLE
624	1	1	SX (RS)	Cent	1.0	0.4	1.1	1.8	-0.4	37.27
				654	0.7	0.2	1.1	1.5	-0.7	37.82
				655	0.7	0.6	1.1	1.8	-0.4	44.04
				57	1.3	0.6	1.1	2.1	-0.2	36.99
				56	1.3	0.2	1.1	1.9	-0.5	31.50

	NODE	Mxx	Myy	Mxy	Mmax	Mmin	ANGLE
	Cent	0.9	0.7	0.2	1.0	0.6	30.83
	654	0.4	0.5	0.2	0.6	0.3	49.40
	655	1.4	0.4	0.2	1.5	0.3	12.19
	57	2.2	2.0	0.2	2.3	1.9	35.21
	56	0.4	0.6	0.1	0.6	0.3	57.02

	NODE	Vxx	Vyy
	Cent	3.3	2.3
	654	2.6	0.3
	655	2.6	4.3
	57	4.0	4.3
	56	4.0	0.3

LC	NODE	Fxx	Fyy	Fxy	Fmax	Fmin	ANGLE
SY (RS)	Cent	1.8	0.4	1.3	2.6	-0.3	30.58
	654	1.8	0.9	1.3	2.7	-0.0	35.73
	655	1.8	0.6	1.3	2.6	-0.2	32.85
	57	2.0	0.6	1.3	2.8	-0.2	30.91
	56	2.0	0.9	1.3	2.8	0.1	33.62

	NODE	Mxx	Myy	Mxy	Mmax	Mmin	ANGLE
	Cent	1.4	1.2	1.7	3.0	-0.3	43.27
	654	1.8	2.5	2.1	4.3	0.0	50.02
	655	1.1	5.6	2.0	6.4	0.4	69.05
	57	3.4	6.7	0.8	6.9	3.2	77.18
	56	1.1	3.0	0.9	3.4	0.8	69.07

	NODE	Vxx	Vyy
	Cent	0.5	10.7
	654	3.0	0.5
	655	3.0	22.0
	57	2.1	22.0
	56	2.1	0.5

LC		NODE	Fxx	Fyy	Fxy	Fmax	Fmin	ANGLE
RC ENV~1	Max	Cent	1.9	0.7	1.4	2.8	0.2	33.59
		654	1.8	1.3	1.4	3.0	0.3	39.47
		655	1.8	0.8	1.4	2.8	0.3	34.63
		57	2.0	0.8	1.4	2.9	0.1	33.19
		56	2.0	1.3	1.4	3.1	0.2	37.87
	Min	Cent	-1.8	-0.2	-1.2	0.4	-2.4	63.34
		654	-1.7	-0.5	-1.2	0.2	-2.4	-58.44
		655	-1.7	-0.5	-1.2	0.2	-2.4	-59.21
		57	-2.0	-0.5	-1.2	0.2	-2.6	-55.91
		56	-2.0	-0.5	-1.2	0.1	-2.6	-60.94

	NODE	Mxx	Myy	Mxy	Mmax	Mmin	ANGLE
Max	Cent	-0.5	4.2	1.4	4.6	-0.9	74.41
	654	-2.1	2.3	1.6	2.9	-2.6	71.75
	655	0.4	6.2	1.5	6.6	0.3	76.74
	57	3.6	13.8	0.8	13.8	3.6	85.54
	56	-2.0	7.3	0.9	7.4	-2.1	84.51
Min	Cent	-5.0	1.7	-2.5	2.3	-5.6	-85.00
	654	-8.4	-2.7	-2.7	-1.3	-9.2	-60.13
	655	-2.8	-5.0	-2.9	-0.8	-6.4	-30.42
	57	-3.2	0.4	-2.1	0.5	-3.4	-78.25
	56	-7.7	1.2	-2.0	1.3	-8.0	-81.29

	NODE	Vxx	Vyy
Max	Cent	-1.5	0.7
	654	-1.7	-7.7
	655	-1.7	10.1
	57	-0.9	10.1
	56	-0.9	-7.7
Min	Cent	-12.2	-20.8
	654	-11.5	-11.1
	655	-11.5	-33.8
	57	-12.8	-33.8
	56	-12.8	-11.1

LC		NODE	Fxx	Fyy	Fxy	Fmax	Fmin	ANGLE
RC ENV~2	Max	Cent	0.2	0.5	0.4	0.6	0.1	55.69
		654	0.2	0.6	0.4	0.8	0.2	63.52
		655	0.2	0.4	0.4	0.5	0.2	47.42
		57	0.2	0.4	0.4	0.5	0.1	38.84
		56	0.2	0.6	0.4	0.8	0.1	62.46
	Min	Cent	0.0	0.2	-0.1	0.3	-0.2	72.62
		654	0.1	0.4	-0.1	0.4	-0.1	-79.80
		655	0.1	-0.0	-0.1	0.2	-0.3	62.06
		57	-0.1	-0.0	-0.1	0.2	-0.3	69.45
		56	-0.1	0.4	-0.1	0.4	-0.1	-83.93

	NODE	Mxx	Myy	Mxy	Mmax	Mmin	ANGLE
Max	Cent	-1.8	3.1	-0.2	3.4	-1.8	-75.95
	654	-3.8	-0.0	-0.4	0.2	-3.9	-75.01
	655	-0.4	0.8	-0.5	1.8	-1.0	-56.76
	57	1.1	8.4	0.0	8.5	1.0	-83.49
	56	-3.1	4.3	0.0	4.4	-3.1	-85.71
Min	Cent	-3.5	2.6	-1.6	2.8	-3.9	-80.43
	654	-6.0	-0.9	-1.8	-0.5	-6.5	-72.80
	655	-2.0	0.3	-1.9	0.7	-2.8	-72.10
	57	-0.8	6.5	-1.3	6.6	-1.0	-84.26
	56	-5.4	3.6	-1.2	3.6	-5.6	-84.95

	NODE	Vxx	Vyy
Max	Cent	-4.6	-9.3
	654	-4.6	-7.9
	655	-4.6	-10.7
	57	-4.7	-10.7
	56	-4.7	-7.9
Min	Cent	-8.6	-11.8
	654	-8.2	-8.5
	655	-8.2	-15.0
	57	-9.0	-15.0
	56	-9.0	-8.5

ELEM	MAT	SEC	LC		NODE	Fxx	Fyy	Fxy	Fmax	Fmin	ANGLE
625	1	1	SX (RS)		Cent	2.5	0.1	2.4	4.0	-1.4	31.52
					655	0.7	0.3	2.4	2.9	-1.8	42.54
					656	0.7	0.5	2.4	3.0	-1.8	43.63
					15	5.8	0.5	2.4	6.7	-0.4	21.08
					57	5.8	0.3	2.4	6.6	-0.6	20.59

NODE	Mxx	Myy	Mxy	Mmax	Mmin	ANGLE
Cent	4.6	1.2	1.4	5.1	0.6	20.11
655	1.7	0.3	0.5	1.8	0.2	18.68
656	3.4	0.7	4.1	6.4	-2.3	35.95
15	17.9	3.6	4.0	18.9	2.6	14.46
57	2.1	2.0	0.6	2.7	1.4	43.00

NODE	Vxx	Vyy
Cent	9.4	2.2
655	8.9	4.3
656	8.9	0.0
15	27.7	0.0
57	27.7	4.3

LC		NODE	Fxx	Fyy	Fxy	Fmax	Fmin	ANGLE
SY (RS)		Cent	1.9	5.8	3.4	7.8	-0.1	60.18
		655	1.4	0.6	3.4	4.4	-2.4	41.85
		656	1.4	12.1	3.4	13.1	0.4	73.86
		15	2.6	12.1	3.4	13.2	1.5	72.29
		57	2.6	0.6	3.4	5.1	-1.9	36.99

	NODE	Mxx	Myy	Mxy	Mmax	Mmin	ANGLE
	Cent	0.9	10.7	3.4	11.8	-0.1	72.56
	655	2.7	4.9	0.1	4.9	2.7	87.38
	656	2.9	9.1	0.8	9.2	2.8	82.52
	15	2.3	35.4	7.8	37.1	0.6	77.44
	57	2.7	6.5	8.6	13.4	-4.1	51.30

	NODE	Vxx	Vyy
	Cent	0.8	14.4
	655	8.2	22.0
	656	8.2	50.7
	15	6.8	50.7
	57	6.8	22.0

LC		NODE	Fxx	Fyy	Fxy	Fmax	Fmin	ANGLE
RC ENV~1	Max	Cent	2.5	7.2	4.0	9.3	-0.1	61.94
		655	1.2	0.8	4.0	5.0	0.3	43.54
		656	1.2	14.7	4.0	15.8	0.5	74.73
		15	5.9	14.7	4.0	15.9	1.5	73.16
		57	5.9	0.8	4.0	7.2	-0.5	23.77
	Min	Cent	-2.5	-4.5	-2.8	-0.1	-6.3	-32.57
		655	-1.6	-0.5	-2.8	0.4	-3.9	0.97
		656	-1.6	-9.6	-2.8	-0.7	-10.4	-17.54
		15	-5.6	-9.6	-2.8	-1.5	-10.5	-19.08
		57	-5.6	-0.5	-2.8	0.3	-6.1	89.91

		NODE	Mxx	Myy	Mxy	Mmax	Mmin	ANGLE
	Max	Cent	7.0	14.2	2.7	14.8	4.5	77.03
		655	2.8	5.8	-0.1	5.9	2.7	-81.44
		656	4.7	5.8	4.5	6.3	3.1	26.51
		15	28.4	45.2	7.4	46.8	15.3	77.78
		57	0.8	13.2	7.3	16.6	0.2	65.15
	Min	Cent	-2.2	-7.2	-4.1	3.1	-8.9	-21.99
		655	-2.7	-4.1	-3.2	-2.4	-4.4	-21.56
		656	-2.7	-12.4	-3.8	-2.2	-12.5	-2.78
		15	-7.4	-25.5	-8.1	7.5	-27.3	-73.90
		57	-4.6	0.1	-9.8	5.0	-12.4	-78.09

		NODE	Vxx	Vyy
	Max	Cent	-2.4	-2.4
		655	6.3	10.1
		656	6.3	29.1
		15	6.7	29.1
		57	6.7	10.1
	Min	Cent	-27.2	-31.1
		655	-11.5	-33.8
		656	-11.5	-72.3
		15	-48.9	-72.3
		57	-48.9	-33.8

LC		NODE	Fxx	Fyy	Fxy	Fmax	Fmin	ANGLE
RC ENV~2	Max	Cent	0.5	2.4	1.4	3.1	-0.1	64.02
		655	0.3	0.3	1.4	1.3	0.2	52.29
		656	0.3	4.6	1.4	5.0	0.3	76.04
		15	1.6	4.6	1.4	5.1	0.9	71.27
		57	1.6	0.3	1.4	2.4	-0.4	30.87
	Min	Cent	-0.6	1.2	-0.1	1.2	-0.6	-86.74
		655	-0.6	0.1	-0.1	0.3	-1.6	38.66
		656	-0.6	2.2	-0.1	2.2	-1.0	-86.97
		15	-1.4	2.2	-0.1	2.2	-1.4	-88.40
		57	-1.4	0.1	-0.1	0.2	-1.4	85.28

	NODE	Mxx	Myy	Mxy	Mmax	Mmin	ANGLE
Max	Cent	5.0	4.2	-0.6	6.2	3.2	-41.04
	655	1.2	1.0	-0.6	2.7	-0.1	-48.58
	656	3.2	-2.5	1.0	3.5	-2.6	-12.54
	15	18.8	11.5	0.3	18.8	11.5	-0.54
	57	-1.5	7.8	-1.2	8.7	-2.0	-73.77
Min	Cent	1.4	3.1	-2.5	3.8	0.2	-64.47
	655	-0.9	0.6	-2.1	1.1	-2.0	-64.39
	656	0.4	-4.6	-1.6	0.6	-4.7	8.35
	15	6.9	8.8	-2.6	10.2	5.6	-49.26
	57	-3.0	6.1	-3.1	6.4	-3.7	-78.50

	NODE	Vxx	Vyy
Max	Cent	-11.3	-15.9
	655	-1.9	-10.7
	656	-1.9	-20.8
	15	-16.7	-20.8
	57	-16.7	-10.7
Min	Cent	-19.5	-18.9
	655	-7.6	-15.0
	656	-7.6	-22.7
	15	-35.0	-22.7
	57	-35.0	-15.0

ELEM	MAT	SEC	LC	NODE	Fxx	Fyy	Fxy	Fmax	Fmin	ANGLE
626	1	1	SX (RS)	Cent	2.6	0.6	0.4	2.7	0.5	10.14
				602	3.1	1.0	0.4	3.2	0.9	9.72
				603	3.1	0.2	0.4	3.2	0.2	7.31
				658	2.1	0.2	0.4	2.2	0.1	10.86
				657	2.1	1.0	0.4	2.2	0.8	16.79

	NODE	Mxx	Myy	Mxy	Mmax	Mmin	ANGLE
	Cent	4.0	2.3	0.6	4.2	2.0	17.98
	602	6.7	5.6	0.6	6.9	5.4	23.99
	603	1.9	2.0	0.5	2.4	1.5	47.54
	658	2.9	1.9	0.5	3.1	1.7	21.78
	657	4.8	0.6	0.6	4.8	0.5	7.59

	NODE	Vxx	Vyy
	Cent	6.3	5.8
	602	8.0	11.1
	603	8.0	0.5
	658	4.7	0.5
	657	4.7	11.1

LC	NODE	Fxx	Fyy	Fxy	Fmax	Fmin	ANGLE
SY (RS)	Cent	0.7	1.0	1.4	2.3	-0.6	47.52
	602	0.2	2.1	1.4	2.9	-0.6	62.06
	603	0.2	0.5	1.4	1.8	-1.1	48.23
	658	1.3	0.5	1.4	2.4	-0.6	36.95
	657	1.3	2.1	1.4	3.2	0.2	52.71

	NODE	Mxx	Myy	Mxy	Mmax	Mmin	ANGLE
	Cent	0.3	2.0	1.2	2.7	-0.3	62.00
	602	2.1	10.8	0.2	10.8	2.1	88.60
	603	0.5	0.7	0.2	0.9	0.3	56.73
	658	1.3	0.9	1.7	2.8	-0.6	41.03
	657	2.3	3.2	1.7	4.5	1.0	52.39

	NODE	Vxx	Vyy
	Cent	2.3	11.8
	602	0.5	25.0
	603	0.5	1.5
	658	5.1	1.5
	657	5.1	25.0

LC	NODE	Fxx	Fyy	Fxy	Fmax	Fmin	ANGLE

```
RC ENV~1  Max   Cent        1.8        2.0        1.5        2.6        1.1      61.19
                 602        2.2        2.9        1.5        3.4        1.5      70.24
                 603        2.2        1.9        1.5        2.4        0.9      18.21
                 658        1.4        1.9        1.5        2.5        0.7      52.25
                 657        1.4        2.9        1.5        3.6        1.1      64.11
          Min   Cent       -3.4       -0.2       -1.3        0.3       -3.4     -85.17
                 602       -4.0       -1.3       -1.3       -0.1       -4.0     -85.34
                 603       -4.0        0.3       -1.3        0.7       -4.0     -86.13
                 658       -2.9        0.3       -1.3        0.7       -2.9     -84.90
                 657       -2.9       -1.3       -1.3       -0.3       -3.1     -52.96

                NODE        Mxx        Myy        Mxy       Mmax       Mmin      ANGLE
          ---- ------ ---------- ---------- ---------- ---------- ---------- ----------
          Max   Cent        3.6        8.0       -0.7       12.2        1.3     -52.05
                 602        5.8       14.7       -1.3       15.7        5.4     -61.16
                 603       -1.2        4.8       -0.9        7.0       -2.5     -57.23
                 658        2.5        5.9       -0.3       11.0       -0.8     -52.26
                 657        7.7        8.8       -0.8       15.8        2.0     -45.78
          Min   Cent       -6.0       -0.3       -6.7        0.7       -7.0     -68.69
                 602       -7.5       -6.8       -6.6       -2.0       -8.4     -23.71
                 603       -6.1       -1.1       -5.3       -0.5       -6.7     -71.90
                 658       -5.9       -1.2       -6.6       -0.2       -7.0     -66.85
                 657       -4.8       -1.1       -7.9        2.5       -6.1     -49.28

                NODE        Vxx        Vyy
          ---- ------ ---------- ----------
          Max   Cent       12.4       14.1
                 602       13.0       28.8
                 603       13.0        2.4
                 658       12.0        2.4
                 657       12.0       28.8
          Min   Cent       -1.4       -9.4
                 602       -3.0      -21.2
                 603       -3.0       -4.0
                 658       -0.3       -4.0
                 657       -0.3      -21.2

      LC        NODE        Fxx        Fyy        Fxy       Fmax       Fmin      ANGLE
-------- ---- ------ ---------- ---------- ---------- ---------- ---------- ----------
RC ENV~2  Max   Cent       -0.3        1.4        0.2        1.4       -0.3      89.01
                 602       -0.3        1.5        0.2        1.5       -0.3      89.07
                 603       -0.3        1.4        0.2        1.4       -0.3      89.06
                 658       -0.3        1.4        0.2        1.4       -0.3      88.95
                 657       -0.3        1.5        0.2        1.5       -0.3      88.97
          Min   Cent       -1.8        0.7       -0.0        0.7       -1.8      80.19
                 602       -2.0        0.5       -0.0        0.6       -2.0      78.73
                 603       -2.0        0.8       -0.0        0.8       -2.0      83.93
                 658       -1.6        0.8       -0.0        0.8       -1.6      83.69
                 657       -1.6        0.5       -0.0        0.6       -1.6      79.10

                NODE        Mxx        Myy        Mxy       Mmax       Mmin      ANGLE
          ---- ------ ---------- ---------- ---------- ---------- ---------- ----------
          Max   Cent        2.0        5.5       -1.9        8.2       -1.1     -53.63
                 602        3.5        8.9       -1.9       10.9        1.5     -62.62
                 603       -1.5        3.3       -1.3        4.6       -3.7     -59.59
                 658        1.0        3.9       -1.9        7.2       -2.3     -53.73
                 657        4.9        6.0       -2.5       10.7        0.4     -46.67
          Min   Cent       -2.2        1.8       -4.6        2.6       -3.0     -67.94
                 602       -1.1        3.2       -4.5        4.3       -2.3     -70.95
                 603       -4.3        0.8       -3.6        1.2       -4.6     -76.04
                 658       -3.1        0.6       -4.6        1.5       -4.0     -66.87
                 657       -0.3        2.1       -5.5        3.6       -1.8     -57.70

                NODE        Vxx        Vyy
          ---- ------ ---------- ----------
          Max   Cent        9.0        3.1
                 602        9.3        6.0
                 603        9.3        1.1
                 658        8.7        1.1
                 657        8.7        6.0
          Min   Cent        2.9       -0.9
                 602        2.9        0.5
                 603        2.9       -2.4
                 658        3.0       -2.4
                 657        3.0        0.5

  ELEM   MAT    SEC        LC        NODE        Fxy        Fyy        Fxy       Fmax       Fmin      ANGLE
```

627	1	1	SX (RS)	Cent	1.8	0.2	0.4	1.9	0.1	13.71
				603	2.0	0.3	0.4	2.1	0.2	13.10
				604	2.0	0.2	0.4	2.1	0.1	12.46
				659	1.7	0.2	0.4	1.8	0.1	14.92
				658	1.7	0.3	0.4	1.8	0.2	15.81

	NODE	Mxx	Myy	Mxy	Mmax	Mmin	ANGLE
	Cent	2.2	1.6	0.4	2.4	1.4	25.39
	603	2.7	2.2	0.3	2.8	2.0	24.37
	604	2.0	1.3	0.3	2.1	1.2	17.76
	659	1.9	1.0	0.5	2.2	0.8	23.28
	658	2.8	1.9	0.6	3.0	1.6	26.29

	NODE	Vxx	Vyy
	Cent	2.9	0.6
	603	2.8	0.5
	604	2.8	0.7
	659	2.9	0.7
	658	2.9	0.5

LC		NODE	Fxx	Fyy	Fxy	Fmax	Fmin	ANGLE
SY (RS)		Cent	0.5	0.4	1.4	1.8	-0.9	43.43
		603	0.4	0.5	1.4	1.8	-0.9	45.98
		604	0.4	0.5	1.4	1.8	-0.9	45.99
		659	0.7	0.5	1.4	2.0	-0.8	42.58
		658	0.7	0.5	1.4	2.0	-0.8	42.57

	NODE	Mxx	Myy	Mxy	Mmax	Mmin	ANGLE
	Cent	0.4	0.8	1.1	1.7	-0.5	51.47
	603	0.4	0.7	1.5	2.0	-1.0	48.13
	604	0.3	1.6	1.2	2.3	-0.4	59.85
	659	0.6	1.2	0.7	1.7	0.1	55.59
	658	0.7	0.8	1.0	1.7	-0.3	46.37

	NODE	Vxx	Vyy
	Cent	0.3	0.2
	603	0.3	1.5
	604	0.3	1.3
	659	0.4	1.3
	658	0.4	1.5

LC		NODE	Fxx	Fyy	Fxy	Fmax	Fmin	ANGLE
RC ENV~1	Max	Cent	1.0	1.9	1.5	2.1	0.5	58.67
		603	1.1	2.0	1.5	2.1	0.6	60.94
		604	1.1	1.8	1.5	2.1	0.6	60.92
		659	0.9	1.8	1.5	2.2	0.4	57.51
		658	0.9	2.0	1.5	2.2	0.5	57.54
	Min	Cent	-2.7	0.4	-1.3	0.6	-2.7	-84.61
		603	-2.9	0.3	-1.3	0.5	-2.9	-84.84
		604	-2.9	0.3	-1.3	0.6	-2.9	-84.98
		659	-2.4	0.3	-1.3	0.6	-2.5	-84.23
		658	-2.4	0.3	-1.3	0.5	-2.5	-84.06

	NODE	Mxx	Myy	Mxy	Mmax	Mmin	ANGLE
Max	Cent	0.8	4.3	-0.2	7.3	-1.6	-55.01
	603	0.9	5.3	0.2	7.5	-0.8	-53.89
	604	-1.1	2.1	0.2	3.9	-2.7	-56.98
	659	1.7	4.8	-0.5	7.7	-1.0	-57.00
	658	3.0	6.0	-0.5	10.0	-0.4	-52.99
Min	Cent	-5.8	-1.0	-4.6	-0.5	-6.3	-72.87
	603	-5.9	-1.1	-4.8	-0.6	-6.4	-73.70
	604	-6.6	-1.6	-3.9	-1.0	-6.9	-77.48
	659	-5.7	-0.8	-4.4	-0.1	-6.2	-73.12
	658	-5.6	-1.2	-5.3	-0.4	-6.4	-68.80

	NODE	Vxx	Vyy
Max	Cent	5.5	0.9
	603	6.0	2.4

			604	6.0	1.0			
			659	4.9	1.0			
			658	4.9	2.4			
		Min	Cent	-1.1	-5.0			
			603	-0.8	-4.0			
			604	-0.8	-6.0			
			659	-1.4	-6.0			
			658	-1.4	-4.0			

LC		NODE	Fxx	Fyy	Fxy	Fmax	Fmin	ANGLE
RC ENV~2	Max	Cent	-0.6	1.4	0.2	1.4	-0.7	87.40
		603	-0.7	1.4	0.2	1.4	-0.7	87.55
		604	-0.7	1.3	0.2	1.4	-0.7	86.40
		659	-0.6	1.3	0.2	1.4	-0.6	86.12
		658	-0.6	1.4	0.2	1.4	-0.6	87.33
	Min	Cent	-1.7	0.7	0.1	0.8	-1.7	85.22
		603	-1.8	0.7	0.1	0.7	-1.8	84.46
		604	-1.8	0.7	0.1	0.8	-1.8	87.51
		659	-1.5	0.7	0.1	0.8	-1.5	87.23
		658	-1.5	0.7	0.1	0.7	-1.5	84.08

		NODE	Mxx	Myy	Mxy	Mmax	Mmin	ANGLE
	Max	Cent	-0.2	2.9	-1.2	4.7	-2.1	-57.41
		603	0.0	3.7	-1.2	4.9	-2.1	-56.50
		604	-1.5	1.4	-1.0	2.4	-3.1	-60.07
		659	0.4	3.1	-1.1	4.9	-1.2	-59.22
		658	1.4	4.0	-1.4	6.5	-1.2	-54.81
	Min	Cent	-3.6	0.5	-3.2	0.8	-4.0	-74.94
		603	-3.3	0.9	-3.2	1.4	-3.6	-75.25
		604	-4.8	-0.0	-2.6	0.2	-5.0	-78.61
		659	-3.9	0.3	-3.0	0.6	-4.3	-75.39
		658	-2.9	0.7	-3.6	1.2	-3.4	-70.85

		NODE	Vxx	Vyy
	Max	Cent	3.9	0.4
		603	4.3	1.1
		604	4.3	-0.2
		659	3.5	-0.2
		658	3.5	1.1
	Min	Cent	0.8	-3.1
		603	1.1	-2.4
		604	1.1	-3.9
		659	0.4	-3.9
		658	0.4	-2.4

ELEM	MAT	SEC	LC		NODE	Fxx	Fyy	Fxy	Fmax	Fmin	ANGLE
628	1	1	SX (RS)		Cent	1.6	0.2	0.4	1.8	0.1	15.96
					604	1.7	0.2	0.4	1.9	0.1	14.85
					605	1.7	0.3	0.4	1.9	0.2	15.71
					660	1.5	0.3	0.4	1.7	0.2	17.94
					659	1.5	0.2	0.4	1.7	0.1	16.84

		NODE	Mxx	Myy	Mxy	Mmax	Mmin	ANGLE
		Cent	2.2	1.1	0.4	2.3	1.0	17.19
		604	2.1	1.4	0.3	2.2	1.3	18.57
		605	2.6	1.2	0.3	2.6	1.1	12.08
		660	2.5	1.0	0.5	2.6	0.9	16.05
		659	2.0	1.0	0.4	2.1	0.8	21.13

		NODE	Vxx	Vyy
		Cent	2.2	0.5
		604	2.3	0.7
		605	2.3	0.3
		660	2.1	0.3
		659	2.1	0.7

LC		NODE	Fxx	Fyy	Fxy	Fmax	Fmin	ANGLE
SY (RS)		Cent	0.5	0.4	1.4	1.9	-0.9	43.71
		604	0.4	0.5	1.4	1.9	-1.0	45.43

		605	0.4	0.3	1.4	1.8	-1.0	44.09
		660	0.6	0.3	1.4	1.9	-0.9	41.98
		659	0.6	0.5	1.4	2.0	-0.9	43.31

	NODE	Mxx	Myy	Mxy	Mmax	Mmin	ANGLE
	Cent	0.3	1.3	0.7	1.6	0.0	63.03
	604	0.2	1.7	0.7	1.9	-0.0	68.55
	605	0.3	1.1	0.6	1.4	0.0	62.85
	660	0.5	1.3	0.6	1.6	0.1	61.22
	659	0.4	1.1	0.7	1.6	-0.0	58.11

	NODE	Vxx	Vyy
	Cent	0.1	0.6
	604	0.2	1.3
	605	0.2	0.2
	660	0.1	0.2
	659	0.1	1.3

LC		NODE	Fxx	Fyy	Fxy	Fmax	Fmin	ANGLE
RC ENV~1	Max	Cent	0.7	1.8	1.6	2.2	0.3	58.69
		604	0.8	1.8	1.6	2.2	0.3	60.28
		605	0.8	1.9	1.6	2.1	0.4	59.55
		660	0.7	1.9	1.6	2.2	0.3	56.99
		659	0.7	1.8	1.6	2.3	0.3	57.78
	Min	Cent	-2.5	0.4	-1.3	0.6	-2.6	-84.70
		604	-2.7	0.3	-1.3	0.6	-2.8	-84.99
		605	-2.7	0.5	-1.3	0.5	-2.8	-84.88
		660	-2.4	0.5	-1.3	0.5	-2.4	-84.25
		659	-2.4	0.3	-1.3	0.6	-2.4	-84.39

	NODE	Mxx	Myy	Mxy	Mmax	Mmin	ANGLE
Max	Cent	0.8	3.0	-0.1	4.7	-0.9	-59.45
	604	-0.7	2.3	-0.2	3.7	-2.2	-56.66
	605	-0.2	1.7	-0.0	2.4	-1.6	-57.77
	660	2.4	4.9	0.0	6.0	1.2	-63.03
	659	1.7	4.9	-0.1	6.9	-0.1	-59.34
Min	Cent	-6.1	-1.1	-2.9	-0.7	-6.3	-78.63
	604	-6.4	-1.6	-3.2	-1.1	-6.6	-78.24
	605	-6.7	-1.2	-2.4	-1.1	-6.9	-80.92
	660	-6.0	-0.8	-2.6	-0.4	-6.2	-70.97
	659	-5.7	-0.8	-3.4	-0.3	-6.0	-76.62

	NODE	Vxx	Vyy
Max	Cent	1.9	0.1
	604	2.0	1.0
	605	2.0	-0.4
	660	1.7	-0.4
	659	1.7	1.0
Min	Cent	-2.6	-6.3
	604	-2.6	-6.0
	605	-2.6	-6.6
	660	-2.5	-6.6
	659	-2.5	-6.0

LC		NODE	Fxx	Fyy	Fxy	Fmax	Fmin	ANGLE
RC ENV~2	Max	Cent	-0.8	1.3	0.2	1.4	-0.8	85.50
		604	-0.9	1.3	0.2	1.3	-0.9	86.29
		605	-0.9	1.4	0.2	1.4	-0.9	85.74
		660	-0.7	1.4	0.2	1.4	-0.7	85.38
		659	-0.7	1.3	0.2	1.3	-0.7	85.94
	Min	Cent	-1.7	0.7	0.1	0.7	-1.8	86.07
		604	-1.9	0.7	0.1	0.7	-1.9	85.11
		605	-1.9	0.7	0.1	0.7	-1.9	86.20
		660	-1.6	0.7	0.1	0.7	-1.6	85.77
		659	-1.6	0.7	0.1	0.7	-1.6	84.63

	NODE	Mxx	Myy	Mxy	Mmax	Mmin	ANGLE
Max	Cent	-0.2	2.0	-0.7	2.9	-1.2	-62.74
	604	-1.2	1.6	-0.8	2.3	-2.5	-60.28
	605	-0.9	1.1	-0.6	1.4	-1.8	-62.79

		660	0.9	3.2	-0.6	3.8	0.2	-66.42
		659	0.4	3.2	-0.8	4.4	-0.7	-62.04
	Min	Cent	-4.1	0.2	-2.0	0.3	-4.3	-80.84
		604	-4.4	0.0	-2.2	0.2	-4.6	-79.96
		605	-4.4	-0.1	-1.6	0.0	-4.5	-81.67
		660	-3.8	0.4	-1.8	0.5	-3.9	-81.05
		659	-3.8	0.3	-2.3	0.5	-4.0	-79.40

		NODE	Vxx	Vyy
	Max	Cent	0.8	-0.4
		604	0.9	-0.2
		605	0.9	-0.6
		660	0.6	-0.6
		659	0.6	-0.2
	Min	Cent	-1.0	-4.1
		604	-1.0	-3.9
		605	-1.0	-4.3
		660	-1.1	-4.3
		659	-1.1	-3.9

ELEM	MAT	SEC	LC		NODE	Fxx	Fyy	Fxy	Fmax	Fmin	ANGLE
629	1	1	SX (RS)		Cent	1.8	0.4	0.4	1.9	0.3	15.34
					605	1.9	0.2	0.4	2.0	0.1	13.39
					606	1.9	0.5	0.4	2.0	0.4	15.63
					661	1.7	0.5	0.4	1.8	0.4	18.04
					660	1.7	0.2	0.4	1.8	0.1	15.19

		NODE	Mxx	Myy	Mxy	Mmax	Mmin	ANGLE
		Cent	2.9	1.2	0.5	3.0	1.1	14.04
		605	2.5	1.2	0.4	2.5	1.1	14.55
		606	3.5	1.6	0.4	3.6	1.5	11.24
		661	3.4	1.3	0.5	3.5	1.2	13.50
		660	2.4	1.0	0.5	2.6	0.9	17.67

		NODE	Vxx	Vyy
		Cent	2.1	0.4
		605	2.1	0.3
		606	2.1	0.6
		661	2.0	0.6
		660	2.0	0.3

LC		NODE	Fxx	Fyy	Fxy	Fmax	Fmin	ANGLE
SY (RS)		Cent	0.6	0.3	1.5	2.0	-1.1	41.72
		605	0.6	0.3	1.5	2.0	-1.1	42.55
		606	0.6	0.2	1.5	1.9	-1.1	41.50
		661	0.7	0.2	1.5	2.0	-1.1	40.81
		660	0.7	0.3	1.5	2.0	-1.0	41.85

		NODE	Mxx	Myy	Mxy	Mmax	Mmin	ANGLE
		Cent	0.4	1.2	0.6	1.5	0.1	63.81
		605	0.2	1.1	0.6	1.4	-0.0	64.55
		606	0.4	1.4	0.5	1.6	0.2	65.47
		661	0.5	1.2	0.6	1.5	0.2	61.14
		660	0.5	1.3	0.6	1.6	0.2	62.39

		NODE	Vxx	Vyy
		Cent	0.3	0.2
		605	0.3	0.2
		606	0.3	0.5
		661	0.3	0.5
		660	0.3	0.2

LC		NODE	Fxx	Fyy	Fxy	Fmax	Fmin	ANGLE
RC ENV~1	Max	Cent	0.8	1.9	1.7	2.2	0.3	57.02
		605	0.8	1.8	1.7	2.2	0.3	57.99
		606	0.8	2.0	1.7	2.2	0.4	57.66
		661	0.7	2.0	1.7	2.2	0.4	55.96
		660	0.7	1.8	1.7	2.3	0.3	56.31

Min	Cent	-2.9	0.5	-1.3	0.5	-3.0	-85.98
	605	-3.2	0.5	-1.3	0.6	-3.2	-86.31
	606	-3.2	0.3	-1.3	0.4	-3.2	-86.08
	661	-2.7	0.3	-1.3	0.4	-2.7	-85.56
	660	-2.7	0.5	-1.3	0.6	-2.7	-85.86

	NODE	Mxx	Myy	Mxy	Mmax	Mmin	ANGLE
Max	Cent	1.9	3.5	0.3	3.8	1.4	-69.31
	605	-0.4	1.7	0.1	2.0	-1.4	-77.61
	606	1.8	3.0	0.3	3.1	1.0	-81.80
	661	4.1	5.7	0.5	5.8	4.0	-78.63
	660	2.2	4.9	0.3	5.3	1.7	-71.70
Min	Cent	-6.1	-0.7	-1.3	-0.6	-6.2	-82.58
	605	-6.7	-1.2	-1.8	-1.1	-6.8	-81.85
	606	-6.2	-0.9	-1.0	-0.9	-6.3	-83.31
	661	-5.6	-0.2	-0.9	-0.2	-5.6	-83.35
	660	-6.0	-0.8	-1.7	-0.6	-6.2	-75.96

	NODE	Vxx	Vyy
Max	Cent	-0.4	-0.2
	605	-0.4	-0.4
	606	-0.4	0.0
	661	-0.4	0.0
	660	-0.4	-0.4
Min	Cent	-4.5	-6.5
	605	-4.6	-6.6
	606	-4.6	-6.3
	661	-4.4	-6.3
	660	-4.4	-6.6

LC		NODE	Fxx	Fyy	Fxy	Fmax	Fmin	ANGLE
RC ENV~2	Max	Cent	-0.6	1.4	0.3	1.4	-0.7	84.65
		605	-0.7	1.3	0.3	1.3	-0.7	84.78
		606	-0.7	1.5	0.3	1.5	-0.7	85.01
		661	-0.6	1.5	0.3	1.5	-0.6	84.52
		660	-0.6	1.3	0.3	1.3	-0.6	84.24
	Min	Cent	-2.1	0.7	0.1	0.7	-2.1	85.00
		605	-2.3	0.7	0.1	0.7	-2.3	85.36
		606	-2.3	0.6	0.1	0.6	-2.3	85.03
		661	-1.9	0.6	0.1	0.6	-2.0	84.52
		660	-1.9	0.7	0.1	0.7	-2.0	84.85

	NODE	Mxx	Myy	Mxy	Mmax	Mmin	ANGLE
Max	Cent	0.7	2.3	-0.2	2.5	0.4	-74.08
	605	-1.0	1.1	-0.4	1.3	-1.5	-79.20
	606	0.7	2.1	-0.2	2.1	0.4	-82.99
	661	2.2	3.8	0.0	3.9	2.2	-81.69
	660	0.7	3.2	-0.3	3.4	0.5	-74.98
Min	Cent	-3.5	0.5	-0.9	0.5	-3.5	-85.35
	605	-4.5	-0.1	-1.2	-0.0	-4.5	-83.61
	606	-3.0	0.2	-0.7	0.4	-3.0	-76.26
	661	-2.5	1.0	-0.6	1.0	-2.5	-87.54
	660	-3.9	0.4	-1.1	0.4	-3.9	-85.13

	NODE	Vxx	Vyy
Max	Cent	-1.5	-0.5
	605	-1.5	-0.6
	606	-1.5	-0.4
	661	-1.5	-0.4
	660	-1.5	-0.6
Min	Cent	-3.1	-4.2
	605	-3.2	-4.3
	606	-3.2	-4.1
	661	-3.0	-4.1
	660	-3.0	-4.3

ELEM	MAT	SEC	LC		NODE	Fxx	Fyy	Fxy	Fmax	Fmin	ANGLE
630	1	1	SX (RS)		Cent	2.3	0.6	0.4	2.4	0.5	12.88
					606	2.5	0.4	0.4	2.6	0.3	10.76
					607	2.5	0.8	0.4	2.6	0.7	12.99
					662	2.1	0.8	0.4	2.2	0.7	15.97

661	2.1	0.4	0.4	2.2	0.3	12.80

NODE	Mxx	Myy	Mxy	Mmax	Mmin	ANGLE
Cent	3.9	1.8	0.6	4.1	1.7	13.83
606	3.2	1.5	0.4	3.3	1.4	13.91
607	4.6	2.3	0.5	4.7	2.2	12.05
662	4.7	2.1	0.7	4.9	2.0	14.05
661	3.3	1.3	0.6	3.4	1.1	15.91

NODE	Vxx	Vyy
Cent	2.3	0.5
606	2.3	0.6
607	2.3	0.5
662	2.4	0.5
661	2.4	0.6

LC		NODE	Fxx	Fyy	Fxy	Fmax	Fmin	ANGLE
SY (RS)		Cent	0.8	0.3	1.7	2.2	-1.2	40.70
		606	0.8	0.2	1.7	2.2	-1.2	39.67
		607	0.8	0.5	1.7	2.3	-1.1	42.04
		662	0.8	0.5	1.7	2.3	-1.1	42.19
		661	0.8	0.2	1.7	2.2	-1.2	39.82

NODE	Mxx	Myy	Mxy	Mmax	Mmin	ANGLE
Cent	0.5	0.9	0.7	1.4	-0.0	53.26
606	0.3	1.4	0.7	1.7	-0.0	62.68
607	0.5	0.4	0.9	1.3	-0.4	42.30
662	0.8	0.9	0.7	1.5	0.1	47.01
661	0.6	1.2	0.6	1.6	0.3	58.41

NODE	Vxx	Vyy
Cent	0.4	0.3
606	0.4	0.5
607	0.4	1.0
662	0.5	1.0
661	0.5	0.5

LC		NODE	Fxx	Fyy	Fxy	Fmax	Fmin	ANGLE
RC ENV~1	Max	Cent	1.1	2.1	1.9	2.4	0.6	56.41
		606	1.1	1.9	1.9	2.3	0.5	55.99
		607	1.1	2.2	1.9	2.6	0.7	58.35
		662	1.0	2.2	1.9	2.6	0.6	57.16
		661	1.0	1.9	1.9	2.4	0.4	54.71
	Min	Cent	-3.8	0.3	-1.4	0.3	-3.8	-87.45
		606	-4.1	0.4	-1.4	0.4	-4.2	-87.71
		607	-4.1	0.1	-1.4	0.1	-4.2	-87.54
		662	-3.4	0.1	-1.4	0.1	-3.5	-87.12
		661	-3.4	0.4	-1.4	0.4	-3.5	-87.35

NODE		Mxx	Myy	Mxy	Mmax	Mmin	ANGLE
	Max	Cent	4.4	5.3	0.9	5.5	3.8	61.81
		606	1.0	2.8	0.6	2.8	1.0	-88.17
		607	5.4	6.1	1.0	6.2	4.3	77.23
		662	7.6	7.7	1.4	9.0	6.2	46.05
		661	3.7	5.6	0.9	5.7	3.5	77.27
	Min	Cent	-5.2	-0.3	-0.5	-0.3	-5.2	-85.72
		606	-6.3	-1.0	-0.8	-0.9	-6.4	-84.27
		607	-4.5	-0.1	-0.8	-0.1	-4.6	-85.17
		662	-4.2	0.2	-0.2	0.2	-4.2	-87.09
		661	-5.7	-0.3	-0.4	-0.2	-5.7	-85.98

NODE		Vxx	Vyy
	Max	Cent	-2.7	0.3
		606	-2.9	0.0
		607	-2.9	1.0
		662	-2.5	1.0
		661	-2.5	0.0
	Min	Cent	-8.9	-5.8
		606	-9.2	-6.3

		607	-9.2	-5.2
		662	-8.6	-5.2
		661	-8.6	-6.3

LC		NODE	Fxx	Fyy	Fxy	Fmax	Fmin	ANGLE
RC ENV~2	Max	Cent	-0.5	1.5	0.4	1.5	-0.5	84.06
		606	-0.6	1.4	0.4	1.4	-0.6	84.19
		607	-0.6	1.6	0.4	1.7	-0.6	84.53
		662	-0.5	1.6	0.4	1.7	-0.5	83.92
		661	-0.5	1.4	0.4	1.4	-0.5	83.50
	Min	Cent	-2.7	0.6	0.1	0.6	-2.7	84.78
		606	-2.9	0.7	0.1	0.7	-3.0	85.20
		607	-2.9	0.6	0.1	0.6	-3.0	84.76
		662	-2.4	0.6	0.1	0.6	-2.5	84.29
		661	-2.4	0.7	0.1	0.7	-2.5	84.81

	NODE	Mxx	Myy	Mxy	Mmax	Mmin	ANGLE
Max	Cent	2.6	3.7	0.6	3.7	2.2	69.40
	606	0.1	1.9	0.1	1.9	0.1	-88.25
	607	3.4	4.4	0.6	4.4	3.0	79.76
	662	4.9	5.3	1.0	6.1	4.1	50.60
	661	1.9	3.7	0.5	3.8	1.8	79.56
Min	Cent	-1.5	1.4	-0.0	1.4	-1.5	87.22
	606	-3.4	0.2	-0.4	0.2	-3.4	-83.56
	607	-0.2	1.4	0.0	1.4	-0.2	85.90
	662	0.3	2.1	0.3	2.2	0.2	78.35
	661	-2.7	0.9	-0.1	0.9	-2.7	87.19

	NODE	Vxx	Vyy
Max	Cent	-3.8	-0.1
	606	-4.0	-0.4
	607	-4.0	0.2
	662	-3.6	0.2
	661	-3.6	-0.4
Min	Cent	-6.6	-3.7
	606	-6.9	-4.1
	607	-6.9	-3.3
	662	-6.4	-3.3
	661	-6.4	-4.1

ELEM	MAT	SEC	LC		NODE	Fxx	Fyy	Fxy	Fmax	Fmin	ANGLE
631	1	1	SX (RS)		Cent	3.4	1.1	0.7	3.6	0.9	15.52
					607	4.0	0.6	0.7	4.1	0.5	11.37
					608	4.0	1.6	0.7	4.1	1.4	15.27
					663	2.9	1.6	0.7	3.2	1.3	23.71
					662	2.9	0.6	0.7	3.1	0.4	15.93

	NODE	Mxx	Myy	Mxy	Mmax	Mmin	ANGLE
	Cent	5.7	2.4	0.8	5.9	2.3	12.21
	607	3.9	2.2	0.6	4.1	2.0	18.13
	608	7.8	5.0	0.7	8.0	4.8	13.23
	663	6.4	0.7	0.8	6.5	0.6	7.61
	662	4.8	2.2	0.7	5.0	2.0	13.84

	NODE	Vxx	Vyy
	Cent	4.8	4.4
	607	6.0	0.5
	608	6.0	8.3
	663	3.5	8.3
	662	3.5	0.5

LC		NODE	Fxx	Fyy	Fxy	Fmax	Fmin	ANGLE
SY (RS)		Cent	1.2	0.4	1.9	2.7	-1.1	39.65
		607	1.3	0.5	1.9	2.8	-1.0	39.10
		608	1.3	1.4	1.9	3.2	-0.6	45.76
		663	1.2	1.4	1.9	3.2	-0.6	46.17
		662	1.2	0.5	1.9	2.8	-1.1	39.49

	NODE	Mxx	Myy	Mxy	Mmax	Mmin	ANGLE

	Cent	0.8	1.5	0.8	2.1	0.2	55.82
	607	0.4	0.4	0.5	0.9	-0.1	44.18
	608	1.7	6.1	0.5	6.1	1.6	83.11
	663	1.4	1.5	1.1	2.5	0.4	46.63
	662	1.1	0.9	1.0	2.0	-0.0	42.26

	NODE	Vxx	Vyy
	Cent	1.7	6.2
	607	1.3	1.0
	608	1.3	13.2
	663	3.0	13.2
	662	3.0	1.0

LC		NODE	Fxx	Fyy	Fxy	Fmax	Fmin	ANGLE
RC ENV~1	Max	Cent	1.7	2.4	2.3	3.0	0.8	49.48
		607	2.0	1.9	2.3	2.9	0.6	37.72
		608	2.0	2.9	2.3	3.7	1.2	62.46
		663	1.4	2.9	2.3	3.8	0.8	60.49
		662	1.4	1.9	2.3	3.0	0.4	54.40
	Min	Cent	-5.3	-0.1	-1.5	-0.1	-5.5	-86.50
		607	-6.2	0.2	-1.5	0.2	-6.3	-87.13
		608	-6.2	-0.4	-1.5	-0.4	-6.3	-86.78
		663	-4.5	-0.4	-1.5	-0.4	-4.6	-85.48
		662	-4.5	0.2	-1.5	0.2	-4.7	-86.14

	NODE	Mxx	Myy	Mxy	Mmax	Mmin	ANGLE
Max	Cent	9.8	8.9	2.6	11.8	6.5	36.57
	607	3.4	5.6	1.5	5.9	2.4	76.64
	608	14.5	14.8	2.5	16.8	12.5	47.50
	663	14.8	8.2	3.5	16.3	6.7	23.34
	662	7.2	7.6	2.4	9.8	4.9	47.40
Min	Cent	-3.2	0.9	-0.0	0.9	-3.2	89.28
	607	-4.9	-0.2	-0.3	-0.2	-4.9	-86.10
	608	-2.4	-0.1	-0.0	1.0	-2.4	-89.48
	663	-1.0	1.7	0.1	2.6	-1.0	83.44
	662	-4.6	0.1	-0.2	0.1	-4.6	88.60

	NODE	Vxx	Vyy
Max	Cent	-4.8	8.8
	607	-4.2	1.0
	608	-4.2	18.4
	663	-5.5	18.4
	662	-5.5	1.0
Min	Cent	-18.4	-3.5
	607	-20.3	-5.2
	608	-20.3	-8.1
	663	-16.5	-8.1
	662	-16.5	-5.2

LC		NODE	Fxx	Fyy	Fxy	Fmax	Fmin	ANGLE
RC ENV~2	Max	Cent	-0.4	1.8	0.8	1.9	-0.4	81.84
		607	-0.4	1.4	0.8	1.5	-0.4	82.16
		608	-0.4	2.1	0.8	2.2	-0.4	82.99
		663	-0.3	2.1	0.8	2.3	-0.3	81.49
		662	-0.3	1.4	0.8	1.6	-0.3	80.26
	Min	Cent	-3.8	0.4	0.0	0.5	-3.9	86.73
		607	-4.4	0.6	0.0	0.6	-4.5	87.27
		608	-4.4	0.3	0.0	0.3	-4.5	86.25
		663	-3.2	0.3	0.0	0.3	-3.3	85.92
		662	-3.2	0.6	0.0	0.6	-3.3	87.10

	NODE	Mxx	Myy	Mxy	Mmax	Mmin	ANGLE
Max	Cent	6.7	6.3	1.8	8.2	4.6	38.39
	607	2.0	4.0	1.0	4.1	1.3	78.36
	608	10.2	10.6	1.7	11.9	9.0	48.94
	663	10.4	5.8	2.4	11.5	4.7	23.29
	662	4.6	5.2	1.7	6.6	3.2	50.26
Min	Cent	2.2	3.0	0.7	3.6	1.8	62.00
	607	-1.3	1.2	0.2	1.3	-1.3	80.57
	608	4.2	4.4	0.6	5.1	3.5	47.13

		663	4.9	3.2	1.1	5.5	2.6	25.15
		662	-0.0	2.1	0.7	2.3	-0.3	72.46

	NODE	Vxx	Vyy
Max	Cent	-7.2	4.3
	607	-7.6	0.2
	608	-7.6	9.6
	663	-6.8	9.6
	662	-6.8	0.2
Min	Cent	-13.6	-0.8
	607	-14.9	-3.3
	608	-14.9	1.5
	663	-12.2	1.5
	662	-12.2	-3.3

ELEM	MAT	SEC	LC		NODE	Fxx	Fyy	Fxy	Fmax	Fmin	ANGLE
632	1	1	SX (RS)		Cent	6.0	1.0	3.1	7.4	-0.5	25.51
					608	11.9	1.1	3.1	12.7	0.3	14.94
					13	11.9	1.2	3.1	12.7	0.4	15.05
					231	0.5	1.2	3.1	4.0	-2.3	48.52
					663	0.5	1.1	3.1	3.9	-2.3	48.08

	NODE	Mxx	Myy	Mxy	Mmax	Mmin	ANGLE
	Cent	12.3	3.2	2.6	13.0	2.5	14.99
	608	7.8	4.9	1.7	8.5	4.2	24.95
	13	38.6	7.9	7.6	40.4	6.1	13.19
	231	4.3	1.1	8.1	10.9	-5.5	39.50
	663	7.0	0.7	1.3	7.2	0.4	11.64

	NODE	Vxx	Vyy
	Cent	17.4	4.3
	608	54.3	8.3
	13	54.3	0.4
	231	19.5	0.4
	663	19.5	8.3

LC		NODE	Fxx	Fyy	Fxy	Fmax	Fmin	ANGLE
SY (RS)		Cent	1.8	5.0	4.3	8.0	-1.2	55.02
		608	3.7	1.4	4.3	7.0	-1.9	37.50
		13	3.7	11.3	4.3	13.3	1.8	65.83
		231	0.6	11.3	4.3	12.8	-0.9	70.69
		663	0.6	1.4	4.3	5.3	-3.3	47.70

	NODE	Mxx	Myy	Mxy	Mmax	Mmin	ANGLE
	Cent	2.6	4.9	2.0	6.0	1.5	60.16
	608	1.7	6.0	5.2	9.5	-1.8	56.31
	13	9.1	21.9	5.1	23.7	7.4	70.71
	231	3.1	3.1	1.6	4.6	1.5	44.67
	663	1.4	1.2	0.7	2.0	0.6	41.29

	NODE	Vxx	Vyy
	Cent	4.6	11.4
	608	12.0	13.2
	13	12.0	35.9
	231	7.2	35.9
	663	7.2	13.2

LC		NODE	Fxx	Fyy	Fxy	Fmax	Fmin	ANGLE
RC ENV~1	Max	Cent	3.3	5.7	5.6	8.9	-0.1	60.06
		608	6.8	2.3	5.6	9.4	0.0	30.98
		13	6.8	11.8	5.6	13.8	0.5	69.84
		231	0.4	11.8	5.6	14.1	-0.5	67.78
		663	0.4	2.3	5.6	7.0	-0.5	50.03
	Min	Cent	-8.9	-4.3	-3.0	-1.4	-10.3	-46.16
		608	-17.2	-0.5	-3.0	-0.0	-18.1	-84.04
		13	-17.2	-10.9	-3.0	-6.7	-18.1	-35.43
		231	-0.8	-10.9	-3.0	-0.0	-11.7	-15.32
		663	-0.8	-0.5	-3.0	0.4	-4.3	85.87

	NODE	Mxx	Myy	Mxy	Mmax	Mmin	ANGLE
Max	Cent	28.1	14.3	3.1	28.1	14.3	4.07
	608	10.6	13.7	7.0	17.3	7.0	56.89
	13	79.6	38.0	5.2	80.7	36.4	-8.84
	231	10.9	3.3	6.0	13.0	3.3	27.26
	663	16.9	8.6	5.8	19.9	5.6	27.18
Min	Cent	-0.7	1.4	-2.1	4.1	-1.6	-65.94
	608	-4.9	-0.6	-3.4	0.5	-4.9	88.30
	13	-6.9	-5.8	-10.0	13.2	-11.9	-63.47
	231	1.4	-2.8	-10.1	4.4	-9.9	-26.72
	663	-0.7	2.2	0.8	2.9	-0.9	76.92

	NODE	Vxx	Vyy
Max	Cent	-6.7	27.3
	608	6.4	18.4
	13	6.4	56.3
	231	19.3	56.3
	663	19.3	18.4
Min	Cent	-52.7	1.3
	608	-118.9	-8.1
	13	-118.9	-15.5
	231	-19.7	-15.5
	663	-19.7	-8.1

LC		NODE	Fxx	Fyy	Fxy	Fmax	Fmin	ANGLE
RC ENV~2	Max	Cent	-0.2	1.2	3.0	2.3	-0.2	70.67
		608	0.0	1.6	3.0	2.3	-0.1	78.22
		13	0.0	1.0	3.0	1.5	-0.0	77.61
		231	-0.1	1.0	3.0	3.3	-0.4	49.55
		663	-0.1	1.6	3.0	3.8	-0.4	53.03
	Min	Cent	-6.3	0.5	-0.2	0.6	-7.3	-76.12
		608	-12.2	0.4	-0.2	0.4	-12.8	-65.24
		13	-12.2	0.4	-0.2	0.7	-12.8	77.76
		231	-0.5	0.4	-0.2	0.8	-2.8	-80.62
		663	-0.5	0.4	-0.2	0.4	-2.5	-76.24

	NODE	Mxx	Myy	Mxy	Mmax	Mmin	ANGLE
Max	Cent	20.1	10.4	2.1	20.2	10.3	3.76
	608	6.5	9.8	4.0	12.3	3.8	57.71
	13	57.2	25.9	0.4	58.0	25.1	-9.01
	231	7.9	0.6	0.6	8.3	0.6	-29.79
	663	11.9	6.1	4.1	14.0	4.0	27.28
Min	Cent	8.9	5.2	0.4	9.5	4.6	20.96
	608	1.7	3.8	1.7	4.9	0.6	59.94
	13	20.6	12.5	-5.1	20.6	12.5	2.58
	231	5.4	-0.3	-4.9	6.3	-3.1	-15.61
	663	5.7	3.3	2.1	6.9	2.1	29.66

	NODE	Vxx	Vyy
Max	Cent	-17.5	20.0
	608	-30.7	9.6
	13	-30.7	30.4
	231	8.9	30.4
	663	8.9	9.6
Min	Cent	-38.4	9.7
	608	-85.6	1.5
	13	-85.6	17.9
	231	-4.2	17.9
	663	-4.2	1.5

ELEM	MAT	SEC	LC		NODE	Fxx	Fyy	Fxy	Fmax	Fmin	ANGLE
633	1	1	SX (RS)		Cent	0.3	0.3	0.4	0.8	-0.1	44.70
					616	1.0	0.1	0.4	1.2	-0.1	20.88
					657	1.0	0.7	0.4	1.3	0.4	34.18
					664	0.5	0.7	0.4	1.0	0.1	52.22
					624	0.5	0.1	0.4	0.7	-0.2	32.51

	NODE	Mxx	Myy	Mxy	Mmax	Mmin	ANGLE
	Cent	0.3	0.2	1.4	1.6	-1.1	43.71

616	9.1	1.8	0.4	9.1	1.8	3.25
657	6.2	3.2	1.7	7.0	2.4	24.66
664	1.6	1.3	1.8	3.3	-0.4	42.88
624	2.0	0.4	0.5	2.1	0.3	15.95

NODE	Vxx	Vyy
Cent	12.7	3.4
616	25.6	0.0
657	25.6	6.9
664	0.9	6.9
624	0.9	0.0

LC		NODE	Fxx	Fyy	Fxy	Fmax	Fmin	ANGLE
SY (RS)		Cent	0.5	2.9	1.3	3.5	-0.1	66.30
		616	1.0	4.1	1.3	4.6	0.5	69.84
		657	1.0	1.8	1.3	2.8	-0.0	53.02
		664	0.2	1.8	1.3	2.5	-0.5	60.11
		624	0.2	4.1	1.3	4.5	-0.2	72.92

	NODE	Mxx	Myy	Mxy	Mmax	Mmin	ANGLE
	Cent	1.8	2.1	0.5	2.5	1.4	52.88
	616	5.2	5.4	0.4	5.7	4.9	49.66
	657	1.4	2.3	0.2	2.3	1.3	75.50
	664	1.5	1.1	0.3	1.7	0.9	28.80
	624	1.8	0.8	0.5	2.0	0.6	23.45

NODE	Vxx	Vyy
Cent	5.8	6.8
616	10.7	9.8
657	10.7	3.7
664	0.9	3.7
624	0.9	9.8

LC		NODE	Fxx	Fyy	Fxy	Fmax	Fmin	ANGLE
RC ENV~1	Max	Cent	-0.2	3.8	1.4	4.2	-0.5	72.94
		616	0.2	5.0	1.4	5.4	-0.0	75.22
		657	0.2	2.6	1.4	3.2	0.1	65.66
		664	-0.2	2.6	1.4	3.1	-0.3	69.04
		624	-0.2	5.0	1.4	5.3	-0.4	76.70
	Min	Cent	-2.0	-2.1	-1.3	-0.3	-3.0	-35.81
		616	-2.1	-3.2	-1.3	-1.0	-4.0	-30.32
		657	-2.1	-0.9	-1.3	0.0	-2.7	-54.31
		664	-1.9	-0.9	-1.3	0.3	-2.2	-73.97
		624	-1.9	-3.2	-1.3	-0.3	-3.8	-23.66

	NODE	Mxx	Myy	Mxy	Mmax	Mmin	ANGLE
Max	Cent	7.3	1.3	-0.4	11.2	-0.2	-33.25
	616	12.2	5.3	-1.3	14.6	4.7	-25.63
	657	9.9	7.2	-0.8	16.2	4.2	-38.90
	664	7.0	0.5	0.0	10.7	-1.2	-30.85
	624	3.3	-4.1	-0.5	5.3	-4.1	-27.09
Min	Cent	-1.5	-3.7	-6.5	-0.1	-5.1	-32.56
	616	-6.9	-5.5	-6.5	-1.9	-7.7	-29.99
	657	-5.2	-2.1	-7.8	0.8	-8.2	-55.24
	664	-2.1	-3.8	-6.5	-0.6	-6.6	-34.64
	624	-3.6	-6.0	-5.1	-2.8	-7.4	-30.09

NODE	Vxx	Vyy
Max Cent	13.4	15.5
616	28.2	17.6
657	28.2	14.7
664	-0.3	14.7
624	-0.3	17.6
Min Cent	-12.0	0.3
616	-23.0	-2.1
657	-23.0	-0.5
664	-7.1	-0.5
624	-7.1	-2.1

LC		NODE	Fxx	Fyy	Fxy	Fmax	Fmin	ANGLE
RC ENV~2	Max	Cent	-0.5	1.5	0.2	1.5	-0.5	89.85
		616	-0.7	1.6	0.2	1.6	-0.7	89.86
		657	-0.7	1.5	0.2	1.5	-0.7	87.42
		664	-0.3	1.5	0.2	1.5	-0.4	87.01
		624	-0.3	1.6	0.2	1.6	-0.4	89.86
	Min	Cent	-1.4	0.9	-0.1	0.9	-1.4	87.93
		616	-1.5	0.8	-0.1	0.8	-1.5	84.48
		657	-1.5	0.8	-0.1	0.8	-1.5	-87.92
		664	-1.4	0.8	-0.1	0.8	-1.4	-87.97
		624	-1.4	0.8	-0.1	0.8	-1.4	82.68

	NODE	Mxx	Myy	Mxy	Mmax	Mmin	ANGLE
Max	Cent	4.8	0.5	-1.8	7.4	-1.8	-33.00
	616	8.3	2.7	-1.7	9.9	1.1	-25.33
	657	6.6	4.9	-2.5	10.9	0.8	-39.43
	664	4.4	-0.1	-1.8	6.9	-2.9	-30.68
	624	1.9	-3.6	-0.9	3.1	-5.2	-26.00
Min	Cent	0.2	-1.6	-4.4	1.3	-3.0	-31.51
	616	1.9	-0.1	-4.4	2.9	-2.2	-29.47
	657	0.7	1.0	-5.4	3.4	-2.3	-46.60
	664	-0.5	-2.5	-4.4	0.5	-3.5	-31.08
	624	-1.8	-5.0	-3.4	-1.5	-5.6	-15.38

	NODE	Vxx	Vyy
Max	Cent	2.0	11.3
	616	6.5	11.9
	657	6.5	10.7
	664	-1.0	10.7
	624	-1.0	11.9
Min	Cent	-3.3	5.9
	616	-2.8	7.2
	657	-2.8	4.5
	664	-4.7	4.5
	624	-4.7	7.2

ELEM	MAT	SEC	LC		NODE	Fxx	Fyy	Fxy	Fmax	Fmin	ANGLE
634	1	1	SX (RS)		Cent	1.3	0.5	0.7	1.7	0.1	29.48
					657	2.3	1.0	0.7	2.6	0.7	23.20
					658	2.3	0.2	0.7	2.5	-0.0	16.48
					665	0.4	0.2	0.7	1.0	-0.4	39.44
					664	0.4	1.0	0.7	1.5	-0.0	55.75

	NODE	Mxx	Myy	Mxy	Mmax	Mmin	ANGLE
	Cent	3.1	0.8	0.4	3.1	0.8	9.35
	657	5.5	3.1	0.5	5.6	3.0	10.79
	658	2.8	1.3	0.5	2.9	1.1	16.42
	665	2.4	0.4	0.5	2.5	0.3	13.66
	664	1.8	1.3	0.5	2.1	1.0	30.68

	NODE	Vxx	Vyy
	Cent	2.3	4.5
	657	4.7	6.9
	658	4.7	2.1
	665	1.1	2.1
	664	1.1	6.9

LC		NODE	Fxx	Fyy	Fxy	Fmax	Fmin	ANGLE
SY (RS)		Cent	1.0	0.9	2.1	3.0	-1.2	44.57
		657	1.7	2.0	2.1	3.9	-0.3	47.64
		658	1.7	0.6	2.1	3.3	-1.0	38.16
		665	0.3	0.6	2.1	2.6	-1.6	47.09
		664	0.3	2.0	2.1	3.4	-1.1	56.11

	NODE	Mxx	Myy	Mxy	Mmax	Mmin	ANGLE
	Cent	0.5	1.0	0.2	1.1	0.5	70.84
	657	2.3	3.0	0.5	3.3	2.0	61.91
	658	1.3	0.7	0.5	1.6	0.4	30.94
	665	0.5	0.7	0.2	0.8	0.4	58.88

```
                          664        1.0        1.0        0.1        1.2        0.9      49.53

                         NODE        Vxx        Vyy
                     ---- ------ ---------- ----------
                         Cent        3.5        1.6
                          657        5.1        3.7
                          658        5.1        0.6
                          665        1.9        0.6
                          664        1.9        3.7

          LC         NODE        Fxx        Fyy        Fxy       Fmax       Fmin      ANGLE
     -------- ---- ------ ---------- ---------- ---------- ---------- ---------- ----------
     RC ENV~1  Max   Cent        0.6        1.9        2.2        3.3        0.1      54.17
                      657        1.6        2.9        2.2        4.3        0.9      57.23
                      658        1.6        1.8        2.2        3.3        0.4      48.37
                      665       -0.2        1.8        2.2        2.9       -0.6      55.80
                      664       -0.2        2.9        2.2        4.0       -0.5      63.11
               Min   Cent       -2.0       -0.1       -2.0        0.5       -3.0     -76.32
                      657       -3.1       -1.2       -2.0       -0.0       -3.9     -78.72
                      658       -3.1        0.1       -2.0        0.7       -3.5     -80.87
                      665       -1.7        0.1       -2.0        0.8       -2.5     -72.20
                      664       -1.7       -1.2       -2.0        0.2       -3.1     -63.85

                         NODE        Mxx        Myy        Mxy       Mmax       Mmin      ANGLE
                     ---- ------ ---------- ---------- ---------- ---------- ---------- ----------
               Max   Cent        5.1        3.6       -1.9       11.7       -1.1     -41.97
                      657        7.3        6.6       -2.0       14.4        2.5     -42.77
                      658        2.2        4.4       -1.7       10.5       -1.4     -49.45
                      665        5.9        4.3       -1.3       11.5       -0.8     -41.21
                      664        5.2        0.2       -1.6       10.1       -2.4     -34.43
               Min   Cent       -4.7       -1.5       -7.2        0.1       -6.1     -61.34
                      657       -5.8       -2.2       -7.8       -0.5       -7.5     -60.61
                      658       -5.9       -1.1       -7.1        0.1       -7.1     -65.88
                      665       -4.0       -1.2       -6.4        0.4       -5.2     -61.99
                      664       -3.2       -3.9       -7.0       -1.0       -6.2     -41.18

                         NODE        Vxx        Vyy
                     ---- ------ ---------- ----------
               Max   Cent        7.4        9.3
                      657       12.0       14.7
                      658       12.0        4.0
                      665        2.8        4.0
                      664        2.8       14.7
               Min   Cent       -0.6       -0.4
                      657       -0.3       -0.5
                      658       -0.3       -0.4
                      665       -1.6       -0.4
                      664       -1.6       -0.5

          LC         NODE        Fxx        Fyy        Fxy       Fmax       Fmin      ANGLE
     -------- ---- ------ ---------- ---------- ---------- ---------- ---------- ----------
     RC ENV~2  Max   Cent       -0.4        1.4        0.3        1.4       -0.4      84.14
                      657       -0.3        1.5        0.3        1.5       -0.3      84.38
                      658       -0.3        1.3        0.3        1.3       -0.3      88.96
                      665       -0.5        1.3        0.3        1.3       -0.5      88.79
                      664       -0.5        1.5        0.3        1.5       -0.5      84.37
               Min   Cent       -1.4        0.8       -0.1        0.8       -1.4     -87.57
                      657       -1.6        0.8       -0.1        0.8       -1.6     -87.83
                      658       -1.6        0.7       -0.1        0.8       -1.6      85.56
                      665       -1.2        0.7       -0.1        0.8       -1.2      85.21
                      664       -1.2        0.8       -0.1        0.8       -1.2     -87.18

                         NODE        Mxx        Myy        Mxy       Mmax       Mmin      ANGLE
                     ---- ------ ---------- ---------- ---------- ---------- ---------- ----------
               Max   Cent        3.0        2.2       -2.2        7.6       -2.4     -42.76
                      657        4.6        4.4       -2.5        9.7       -0.5     -43.51
                      658        0.8        2.8       -2.2        6.8       -3.0     -50.84
                      665        3.5        2.6       -1.7        7.5       -1.0     -42.12
                      664        3.1       -0.4       -2.1        6.4       -3.6     -34.51
               Min   Cent       -1.7       -0.5       -5.0        1.1       -3.4     -52.55
                      657       -0.5        0.8       -5.4        2.7       -2.8     -52.39
                      658       -3.2        0.1       -4.9        1.2       -4.3     -63.85
                      665       -1.6       -0.5       -4.4        0.8       -3.0     -54.26
                      664       -1.5       -2.7       -4.9        0.0       -4.4     -37.51

                         NODE        Vxx        Vyy
                     ---- ------ ---------- ----------
```

Max	Cent	5.4	6.8	
	657	8.7	10.7	
	658	8.7	3.0	
	665	2.1	3.0	
	664	2.1	10.7	
Min	Cent	1.1	2.4	
	657	3.0	4.5	
	658	3.0	0.0	
	665	-0.8	0.0	
	664	-0.8	4.5	

ELEM	MAT	SEC	LC		NODE	Fxx	Fyy	Fxy	Fmax	Fmin	ANGLE
635	1	1	SX (RS)		Cent	1.3	0.1	0.4	1.5	0.0	17.78
					658	1.7	0.1	0.4	1.8	0.0	14.29
					659	1.7	0.2	0.4	1.8	0.1	14.75
					666	1.0	0.2	0.4	1.2	0.0	23.42
					665	1.0	0.1	0.4	1.2	-0.0	22.43

	NODE	Mxx	Myy	Mxy	Mmax	Mmin	ANGLE
	Cent	2.0	0.8	0.6	2.3	0.5	22.68
	658	2.6	1.3	0.7	2.9	1.0	21.94
	659	2.0	1.1	0.7	2.3	0.7	28.70
	666	1.9	0.6	0.6	2.2	0.4	21.21
	665	2.1	0.4	0.6	2.3	0.2	17.29

	NODE	Vxx	Vyy
	Cent	2.5	1.7
	658	2.9	2.1
	659	2.9	1.2
	666	2.1	1.2
	665	2.1	2.1

LC		NODE	Fxx	Fyy	Fxy	Fmax	Fmin	ANGLE
SY (RS)		Cent	0.7	0.5	1.4	2.0	-0.8	43.10
		658	0.7	0.7	1.4	2.1	-0.7	45.13
		659	0.7	0.4	1.4	2.0	-0.9	42.69
		666	0.8	0.4	1.4	2.0	-0.8	41.28
		665	0.8	0.7	1.4	2.1	-0.7	43.71

	NODE	Mxx	Myy	Mxy	Mmax	Mmin	ANGLE
	Cent	0.5	0.8	0.6	1.2	0.1	51.65
	658	0.6	0.7	0.6	1.3	0.0	45.19
	659	0.6	1.0	0.7	1.5	0.0	53.22
	666	0.7	1.1	0.5	1.5	0.4	56.24
	665	0.5	0.7	0.4	1.0	0.2	55.05

	NODE	Vxx	Vyy
	Cent	0.3	0.3
	658	0.4	0.6
	659	0.4	0.2
	666	0.9	0.2
	665	0.9	0.6

LC		NODE	Fxx	Fyy	Fxy	Fmax	Fmin	ANGLE
RC ENV~1	Max	Cent	0.6	1.8	1.5	2.3	0.2	56.40
		658	0.9	1.8	1.5	2.4	0.4	58.62
		659	0.9	1.7	1.5	2.2	0.4	56.69
		666	0.4	1.7	1.5	2.3	0.0	54.17
		665	0.4	1.8	1.5	2.5	0.0	56.24
	Min	Cent	-2.0	0.2	-1.3	0.7	-2.1	-83.85
		658	-2.5	0.1	-1.3	0.7	-2.5	-84.73
		659	-2.5	0.3	-1.3	0.6	-2.5	-84.61
		666	-1.6	0.3	-1.3	0.6	-2.1	-82.55
		665	-1.6	0.1	-1.3	0.7	-2.1	-82.76

		NODE	Mxx	Myy	Mxy	Mmax	Mmin	ANGLE
	Max	Cent	2.9	4.3	-0.7	8.7	-0.9	-48.92
		658	2.7	4.5	-0.9	9.3	-0.7	-49.60

		659	1.4	3.5	-0.5	6.9	-1.6	-53.61
		666	4.3	5.3	-0.5	9.0	1.1	-49.42
		665	4.4	4.0	-0.9	9.7	-0.7	-43.85
	Min	Cent	-5.0	-0.9	-5.1	-0.1	-5.8	-68.06
		658	-5.6	-1.0	-5.6	-0.1	-6.5	-67.60
		659	-5.8	-1.2	-4.6	-0.6	-6.5	-70.43
		666	-4.7	-1.0	-4.5	-0.3	-5.3	-64.12
		665	-4.5	-1.3	-5.5	-0.1	-5.5	-56.40

		NODE	Vxx	Vyy
	Max	Cent	4.0	2.6
		658	4.9	4.0
		659	4.9	1.2
		666	3.0	1.2
		665	3.0	4.0
	Min	Cent	-1.3	-1.8
		658	-1.4	-0.4
		659	-1.4	-3.1
		666	-1.3	-3.1
		665	-1.3	-0.4

LC		NODE	Fxx	Fyy	Fxy	Fmax	Fmin	ANGLE
RC ENV~2	Max	Cent	-0.6	1.3	0.3	1.3	-0.6	86.49
		658	-0.6	1.3	0.3	1.3	-0.6	86.77
		659	-0.6	1.3	0.3	1.3	-0.6	84.26
		666	-0.5	1.3	0.3	1.3	-0.5	83.65
		665	-0.5	1.3	0.3	1.3	-0.5	86.28
	Min	Cent	-1.4	0.7	0.0	0.7	-1.4	84.53
		658	-1.6	0.7	0.0	0.7	-1.6	82.35
		659	-1.6	0.7	0.0	0.7	-1.6	87.04
		666	-1.2	0.7	0.0	0.7	-1.2	86.46
		665	-1.2	0.7	0.0	0.7	-1.2	81.55

		NODE	Mxx	Myy	Mxy	Mmax	Mmin	ANGLE
	Max	Cent	1.3	2.7	-1.3	5.5	-1.1	-50.78
		658	1.2	2.9	-1.5	6.0	-1.9	-51.35
		659	0.2	2.2	-1.1	4.3	-1.7	-55.92
		666	2.2	3.3	-1.0	5.7	0.3	-51.54
		665	2.3	2.4	-1.4	6.1	-1.0	-45.15
	Min	Cent	-3.0	-0.1	-3.5	0.4	-3.6	-69.09
		658	-3.0	0.2	-3.9	0.8	-3.6	-68.07
		659	-4.0	-0.1	-3.1	0.2	-4.4	-74.19
		666	-2.8	0.1	-3.0	0.4	-3.3	-72.16
		665	-2.5	-0.6	-3.8	0.1	-3.3	-61.74

		NODE	Vxx	Vyy
	Max	Cent	2.8	1.5
		658	3.5	3.0
		659	3.5	0.2
		666	2.2	0.2
		665	2.2	3.0
	Min	Cent	0.1	-1.0
		658	0.4	0.0
		659	0.4	-2.0
		666	-0.3	-2.0
		665	-0.3	0.0

ELEM	MAT	SEC	LC		NODE	Fxx	Fyy	Fxy	Fmax	Fmin	ANGLE
636	1	1	SX (RS)		Cent	1.3	0.2	0.5	1.5	0.0	20.11
					659	1.5	0.1	0.5	1.7	-0.0	17.23
					660	1.5	0.2	0.5	1.7	0.1	18.25
					667	1.1	0.2	0.5	1.3	0.0	23.89
					666	1.1	0.1	0.5	1.3	-0.1	22.32

		NODE	Mxx	Myy	Mxy	Mmax	Mmin	ANGLE
		Cent	2.1	0.8	0.6	2.4	0.6	21.79
		659	2.0	1.1	0.6	2.3	0.8	26.42
		660	2.5	1.0	0.6	2.7	0.8	19.08
		667	2.4	0.7	0.7	2.7	0.5	18.74
		666	1.9	0.6	0.6	2.1	0.3	22.73

	NODE	Vxx	Vyy
	Cent	2.0	0.9
	659	2.1	1.2
	660	2.1	0.7
	667	1.9	0.7
	666	1.9	1.2

LC		NODE	Fxx	Fyy	Fxy	Fmax	Fmin	ANGLE
SY (RS)		Cent	0.6	0.4	1.4	1.9	-0.9	42.56
		659	0.6	0.4	1.4	1.9	-0.9	42.79
		660	0.6	0.3	1.4	1.9	-0.9	41.90
		667	0.6	0.3	1.4	1.9	-0.9	42.29
		666	0.6	0.4	1.4	1.9	-0.9	43.19

	NODE	Mxx	Myy	Mxy	Mmax	Mmin	ANGLE
	Cent	0.5	1.1	0.6	1.4	0.2	59.57
	659	0.4	1.0	0.6	1.3	-0.0	57.38
	660	0.5	1.2	0.6	1.5	0.1	60.26
	667	0.6	1.3	0.5	1.6	0.4	62.29
	666	0.6	1.1	0.5	1.4	0.2	58.55

	NODE	Vxx	Vyy
	Cent	0.1	0.2
	659	0.1	0.2
	660	0.1	0.2
	667	0.1	0.2
	666	0.1	0.2

LC		NODE	Fxx	Fyy	Fxy	Fmax	Fmin	ANGLE
RC ENV~1	Max	Cent	0.6	1.7	1.6	2.2	0.1	55.76
		659	0.7	1.7	1.6	2.2	0.1	56.70
		660	0.7	1.7	1.6	2.2	0.1	56.10
		667	0.5	1.7	1.6	2.2	0.0	54.77
		666	0.5	1.7	1.6	2.3	-0.0	55.39
	Min	Cent	-2.1	0.4	-1.2	0.6	-2.1	-84.21
		659	-2.4	0.3	-1.2	0.6	-2.4	-84.90
		660	-2.4	0.4	-1.2	0.5	-2.4	-84.74
		667	-1.8	0.4	-1.2	0.6	-1.9	-83.32
		666	-1.8	0.3	-1.2	0.6	-1.9	-83.57

	NODE	Mxx	Myy	Mxy	Mmax	Mmin	ANGLE
Max	Cent	3.0	4.5	-0.0	6.4	1.2	-55.74
	659	1.4	3.5	-0.2	6.0	-0.7	-55.17
	660	2.1	3.6	0.1	4.9	0.7	-58.57
	667	4.6	5.8	0.2	7.2	3.4	-57.40
	666	3.7	5.1	-0.1	7.7	1.6	-52.52
Min	Cent	-5.4	-1.0	-3.1	-0.6	-5.8	-70.01
	659	-5.8	-1.2	-3.6	-0.8	-6.2	-74.21
	660	-6.1	-1.1	-2.6	-0.7	-6.3	-71.60
	667	-5.2	-0.8	-2.5	-0.5	-5.4	-72.29
	666	-5.0	-1.1	-3.5	-0.6	-5.4	-68.21

	NODE	Vxx	Vyy
Max	Cent	1.6	0.7
	659	1.7	1.2
	660	1.7	0.2
	667	1.4	0.2
	666	1.4	1.2
Min	Cent	-2.5	-3.4
	659	-2.5	-3.1
	660	-2.5	-3.8
	667	-2.5	-3.8
	666	-2.5	-3.1

LC		NODE	Fxx	Fyy	Fxy	Fmax	Fmin	ANGLE
RC ENV~2	Max	Cent	-0.6	1.2	0.4	1.3	-0.6	81.97
		659	-0.7	1.3	0.4	1.3	-0.7	84.01
		660	-0.7	1.3	0.4	1.3	-0.7	82.53

667	-0.5	1.3	0.4	1.3	-0.5	81.41
666	-0.5	1.3	0.4	1.3	-0.5	83.07
Min Cent	-1.4	0.7	0.1	0.7	-1.5	83.61
659	-1.6	0.7	0.1	0.7	-1.7	81.35
660	-1.6	0.7	0.1	0.7	-1.7	84.00
667	-1.2	0.7	0.1	0.7	-1.3	82.87
666	-1.2	0.7	0.1	0.7	-1.3	79.91

NODE	Mxx	Myy	Mxy	Mmax	Mmin	ANGLE
Max Cent	1.3	2.9	-0.6	4.0	0.3	-58.91
659	0.2	2.2	-0.8	3.7	-1.0	-58.09
660	0.7	2.3	-0.5	3.0	-0.0	-62.94
667	2.5	3.8	-0.3	4.5	1.8	-60.91
666	1.8	3.3	-0.7	4.8	0.6	-55.33
Min Cent	-3.5	0.1	-2.1	0.2	-3.6	-80.74
659	-3.9	-0.1	-2.4	0.0	-4.2	-78.56
660	-3.8	0.1	-1.8	0.1	-3.9	-81.34
667	-3.0	0.5	-1.7	0.6	-3.0	-81.97
666	-3.2	0.0	-2.3	0.2	-3.5	-78.54

NODE	Vxx	Vyy
Max Cent	0.5	-0.1
659	0.6	0.2
660	0.6	-0.4
667	0.3	-0.4
666	0.3	0.2
Min Cent	-1.2	-2.2
659	-1.1	-2.0
660	-1.1	-2.5
667	-1.2	-2.5
666	-1.2	-2.0

ELEM	MAT	SEC	LC	NODE	Fxx	Fyy	Fxy	Fmax	Fmin	ANGLE
637	1	1	SX (RS)	Cent	1.5	0.2	0.5	1.7	0.0	20.61
				660	1.7	0.2	0.5	1.9	0.0	17.63
				661	1.7	0.3	0.5	1.9	0.1	18.87
				668	1.2	0.3	0.5	1.5	0.1	24.63
				667	1.2	0.2	0.5	1.5	-0.0	22.74

NODE	Mxx	Myy	Mxy	Mmax	Mmin	ANGLE
Cent	2.9	1.0	0.7	3.1	0.7	17.73
660	2.4	1.0	0.6	2.6	0.8	20.60
661	3.4	1.4	0.7	3.6	1.2	16.35
668	3.3	0.9	0.7	3.5	0.7	15.48
667	2.5	0.7	0.7	2.7	0.5	19.31

NODE	Vxx	Vyy
Cent	1.9	0.8
660	2.0	0.7
661	2.0	1.0
668	1.8	1.0
667	1.8	0.7

LC	NODE	Fxx	Fyy	Fxy	Fmax	Fmin	ANGLE
SY (RS)	Cent	0.6	0.3	1.5	1.9	-1.1	41.55
	660	0.7	0.3	1.5	2.0	-1.0	41.85
	661	0.7	0.2	1.5	1.9	-1.1	40.59
	668	0.6	0.2	1.5	1.9	-1.1	41.40
	667	0.6	0.3	1.5	1.9	-1.0	42.68

NODE	Mxx	Myy	Mxy	Mmax	Mmin	ANGLE
Cent	0.5	1.2	0.5	1.5	0.2	60.68
660	0.5	1.2	0.5	1.5	0.2	60.88
661	0.4	1.0	0.5	1.3	0.1	58.93
668	0.6	1.2	0.5	1.5	0.3	61.06
667	0.6	1.3	0.5	1.6	0.3	61.44

NODE	Vxx	Vyy
Cent	0.2	0.3

		660	0.3	0.2
		661	0.3	0.3
		668	0.2	0.3
		667	0.2	0.2

LC		NODE	Fxx	Fyy	Fxy	Fmax	Fmin	ANGLE
RC ENV~1	Max	Cent	0.7	1.7	1.8	2.3	-0.0	54.53
		660	0.7	1.6	1.8	2.3	-0.0	55.62
		661	0.7	1.7	1.8	2.2	0.1	54.88
		668	0.6	1.7	1.8	2.3	-0.1	53.52
		667	0.6	1.6	1.8	2.4	-0.1	54.28
	Min	Cent	-2.4	0.5	-1.2	0.5	-2.5	-85.38
		660	-2.7	0.4	-1.2	0.6	-2.9	-85.97
		661	-2.7	0.5	-1.2	0.5	-2.9	-85.83
		668	-2.0	0.5	-1.2	0.5	-2.1	-84.57
		667	-2.0	0.4	-1.2	0.6	-2.1	-84.80

		NODE	Mxx	Myy	Mxy	Mmax	Mmin	ANGLE
	Max	Cent	4.1	5.0	0.7	5.2	3.8	-69.88
		660	1.9	3.6	0.4	4.1	1.4	-64.89
		661	3.9	4.5	0.7	4.5	3.8	-80.61
		668	6.1	6.1	0.9	6.1	5.9	-78.68
		667	4.5	5.8	0.6	6.3	4.0	-63.54
	Min	Cent	-5.5	-0.6	-1.2	-0.5	-5.6	-78.16
		660	-6.1	-1.1	-1.7	-0.9	-6.2	-76.86
		661	-5.7	-0.7	-0.8	-0.6	-5.7	-83.39
		668	-4.9	-0.3	-0.7	-0.3	-5.0	-79.94
		667	-5.4	-0.8	-1.6	-0.7	-5.5	-77.51

		NODE	Vxx	Vyy
	Max	Cent	-0.4	0.4
		660	-0.4	0.2
		661	-0.4	0.8
		668	-0.5	0.8
		667	-0.5	0.2
	Min	Cent	-4.2	-3.7
		660	-4.4	-3.8
		661	-4.4	-3.5
		668	-4.0	-3.5
		667	-4.0	-3.8

LC		NODE	Fxx	Fyy	Fxy	Fmax	Fmin	ANGLE
RC ENV~2	Max	Cent	-0.5	1.2	0.6	1.3	-0.5	79.28
		660	-0.6	1.2	0.6	1.3	-0.6	80.06
		661	-0.6	1.3	0.6	1.4	-0.6	80.23
		668	-0.4	1.3	0.6	1.4	-0.4	78.36
		667	-0.4	1.2	0.6	1.3	-0.4	78.12
	Min	Cent	-1.7	0.7	0.2	0.7	-1.8	80.90
		660	-2.0	0.7	0.2	0.7	-2.1	81.71
		661	-2.0	0.6	0.2	0.7	-2.1	82.28
		668	-1.4	0.6	0.2	0.7	-1.5	81.05
		667	-1.4	0.7	0.2	0.7	-1.5	80.19

		NODE	Mxx	Myy	Mxy	Mmax	Mmin	ANGLE
	Max	Cent	2.1	3.3	0.1	3.3	2.0	-76.61
		660	0.6	2.3	-0.2	2.5	0.3	-69.12
		661	2.1	3.0	0.2	3.0	2.1	-85.63
		668	3.6	4.0	0.3	4.0	3.6	-88.59
		667	2.3	3.7	-0.0	4.0	2.1	-67.95
	Min	Cent	-2.9	0.5	-0.8	0.5	-2.9	-88.54
		660	-4.0	0.0	-1.1	0.0	-4.0	-85.89
		661	-2.5	0.6	-0.5	0.6	-2.5	89.77
		668	-1.9	0.9	-0.5	0.9	-1.9	87.75
		667	-3.1	0.5	-1.1	0.5	-3.2	-86.96

		NODE	Vxx	Vyy
	Max	Cent	-1.4	-0.1
		660	-1.5	-0.4
		661	-1.5	0.1
		668	-1.4	0.1
		667	-1.4	-0.4

	Min	Cent	-2.9	-2.4
		660	-3.0	-2.5
		661	-3.0	-2.2
		668	-2.7	-2.2
		667	-2.7	-2.5

ELEM	MAT	SEC	LC		NODE	Fxx	Fyy	Fxy	Fmax	Fmin	ANGLE
638	1	1	SX (RS)		Cent	1.8	0.4	0.7	2.0	0.1	22.66
					661	2.2	0.3	0.7	2.4	0.0	17.98
					662	2.2	0.5	0.7	2.4	0.3	20.01
					669	1.3	0.5	0.7	1.7	0.1	29.58
					668	1.3	0.3	0.7	1.7	-0.1	25.94

	NODE	Mxx	Myy	Mxy	Mmax	Mmin	ANGLE
	Cent	3.9	1.1	0.8	4.1	0.9	15.15
	661	3.3	1.3	0.8	3.5	1.1	19.00
	662	4.6	1.6	0.8	4.8	1.4	14.13
	669	4.3	0.8	0.8	4.4	0.6	12.86
	668	3.4	0.9	0.8	3.6	0.7	15.92

	NODE	Vxx	Vyy
	Cent	2.0	1.3
	661	2.4	1.0
	662	2.4	1.6
	669	1.6	1.6
	668	1.6	1.0

LC		NODE	Fxx	Fyy	Fxy	Fmax	Fmin	ANGLE
SY (RS)		Cent	0.7	0.1	1.6	2.0	-1.3	39.45
		661	0.8	0.2	1.6	2.1	-1.1	39.83
		662	0.8	0.1	1.6	2.1	-1.2	39.06
		669	0.6	0.1	1.6	2.0	-1.3	40.34
		668	0.6	0.2	1.6	2.1	-1.2	41.13

	NODE	Mxx	Myy	Mxy	Mmax	Mmin	ANGLE
	Cent	0.6	1.0	0.5	1.4	0.2	54.57
	661	0.6	1.0	0.6	1.4	0.2	55.63
	662	0.7	0.8	0.6	1.3	0.2	46.87
	669	0.5	0.9	0.5	1.2	0.2	57.20
	668	0.7	1.2	0.5	1.5	0.4	58.39

	NODE	Vxx	Vyy
	Cent	0.4	0.3
	661	0.5	0.3
	662	0.5	0.4
	669	0.6	0.4
	668	0.6	0.3

LC		NODE	Fxx	Fyy	Fxy	Fmax	Fmin	ANGLE
RC ENV~1	Max	Cent	0.8	1.7	2.1	2.4	-0.2	52.45
		661	1.0	1.6	2.1	2.5	-0.1	53.86
		662	1.0	1.9	2.1	2.5	0.0	53.73
		669	0.6	1.9	2.1	2.6	-0.2	51.97
		668	0.6	1.6	2.1	2.6	-0.3	52.11
	Min	Cent	-2.8	0.4	-1.2	0.4	-3.1	-85.50
		661	-3.5	0.5	-1.2	0.5	-3.8	-86.33
		662	-3.5	0.3	-1.2	0.3	-3.8	-86.14
		669	-2.1	0.3	-1.2	0.3	-2.5	-84.17
		668	-2.1	0.5	-1.2	0.5	-2.5	-84.59

	NODE	Mxx	Myy	Mxy	Mmax	Mmin	ANGLE
Max	Cent	6.4	5.6	1.5	7.3	4.5	38.33
	661	3.5	4.4	1.2	4.8	2.8	64.76
	662	7.2	5.9	1.9	8.5	4.6	34.99
	669	8.7	5.8	1.9	9.5	5.0	25.06
	668	6.3	6.2	1.3	7.0	5.3	39.47
Min	Cent	-4.6	-0.0	-0.2	-0.0	-4.6	-87.62
	661	-5.8	-0.7	-0.3	-0.7	-5.8	-86.23

		662	-4.2	0.1	-0.1	0.1	-4.2	-88.89
		669	-3.5	0.3	-0.1	0.4	-3.5	-88.96
		668	-5.0	-0.3	-0.3	-0.3	-5.0	-89.11

	NODE	Vxx	Vyy
Max	Cent	-2.5	1.8
	661	-2.5	0.8
	662	-2.5	2.9
	669	-2.5	2.9
	668	-2.5	0.8
Min	Cent	-7.5	-2.5
	661	-8.6	-3.5
	662	-8.6	-1.5
	669	-6.5	-1.5
	668	-6.5	-3.5

LC		NODE	Fxx	Fyy	Fxy	Fmax	Fmin	ANGLE
RC ENV~2	Max	Cent	-0.4	1.3	0.9	1.5	-0.4	75.94
		661	-0.5	1.2	0.9	1.4	-0.5	77.27
		662	-0.5	1.4	0.9	1.5	-0.5	77.72
		669	-0.3	1.4	0.9	1.6	-0.4	74.34
		668	-0.3	1.2	0.9	1.5	-0.4	73.62
	Min	Cent	-2.0	0.6	0.2	0.7	-2.2	80.91
		661	-2.5	0.6	0.2	0.7	-2.7	80.07
		662	-2.5	0.6	0.2	0.6	-2.7	81.07
		669	-1.5	0.6	0.2	0.6	-1.8	79.99
		668	-1.5	0.6	0.2	0.7	-1.8	80.75

	NODE	Mxx	Myy	Mxy	Mmax	Mmin	ANGLE
Max	Cent	3.9	3.7	1.1	4.7	2.8	43.82
	661	1.8	2.9	0.8	3.1	1.4	69.81
	662	4.7	4.1	1.3	5.7	3.1	38.41
	669	5.7	3.9	1.3	6.3	3.2	27.15
	668	3.7	4.1	0.8	4.5	3.2	57.83
Min	Cent	-1.0	1.0	0.3	1.2	-1.1	75.62
	661	-2.8	0.6	0.0	0.6	-2.8	83.98
	662	0.2	1.6	0.5	1.8	-0.1	68.77
	669	0.5	1.1	0.5	1.6	0.1	56.08
	668	-1.8	0.9	0.0	0.9	-1.9	81.68

	NODE	Vxx	Vyy
Max	Cent	-3.2	1.0
	661	-3.6	0.1
	662	-3.6	2.2
	669	-2.7	2.2
	668	-2.7	0.1
Min	Cent	-5.7	-1.5
	661	-6.4	-2.2
	662	-6.4	-0.8
	669	-4.9	-0.8
	668	-4.9	-2.2

ELEM	MAT	SEC	LC		NODE	Fxx	Fyy	Fxy	Fmax	Fmin	ANGLE
639	1	1	SX (RS)		Cent	2.0	0.6	1.3	2.7	-0.2	30.46
					662	3.1	0.5	1.3	3.6	-0.0	22.10
					663	3.1	1.0	1.3	3.7	0.4	25.03
					670	0.9	1.0	1.3	2.2	-0.3	45.56
					669	0.9	0.5	1.3	2.0	-0.6	40.14

	NODE	Mxx	Myy	Mxy	Mmax	Mmin	ANGLE
	Cent	5.1	1.4	0.8	5.2	1.2	11.94
	662	4.7	1.6	0.8	4.9	1.4	13.49
	663	6.9	3.1	0.8	7.1	2.9	11.69
	670	4.1	0.6	0.9	4.4	0.4	13.73
	669	4.5	0.8	0.9	4.7	0.6	12.83

	NODE	Vxx	Vyy
	Cent	1.6	3.4
	662	3.5	1.6
	663	3.5	5.2

	670	0.4	5.2	
	669	0.4	1.6	

LC		NODE	Fxx	Fyy	Fxy	Fmax	Fmin	ANGLE
SY (RS)		Cent	0.8	1.0	2.3	3.2	-1.4	45.76
		662	1.5	0.1	2.3	3.2	-1.6	36.80
		663	1.5	1.9	2.3	4.0	-0.6	47.96
		670	0.3	1.9	2.3	3.5	-1.3	54.84
		669	0.3	0.1	2.3	2.5	-2.1	43.84

	NODE	Mxx	Myy	Mxy	Mmax	Mmin	ANGLE
	Cent	0.6	0.6	0.4	1.0	0.2	44.99
	662	1.1	0.9	0.5	1.5	0.5	38.58
	663	1.5	1.2	0.4	1.8	0.9	36.64
	670	0.4	1.0	0.3	1.1	0.3	66.33
	669	0.7	0.9	0.4	1.2	0.4	52.59

	NODE	Vxx	Vyy
	Cent	2.0	1.3
	662	3.0	0.4
	663	3.0	2.5
	670	1.1	2.5
	669	1.1	0.4

LC		NODE	Fxx	Fyy	Fxy	Fmax	Fmin	ANGLE
RC ENV~1	Max	Cent	0.9	1.6	3.0	3.8	-0.3	53.19
		662	1.6	1.8	3.0	3.4	-0.1	49.63
		663	1.6	2.3	3.0	4.3	-0.1	55.88
		670	0.4	2.3	3.0	4.3	-0.4	56.70
		669	0.4	1.8	3.0	3.4	-0.4	50.56
	Min	Cent	-3.1	-0.4	-1.6	0.1	-4.0	-79.66
		662	-4.7	0.3	-1.6	0.4	-5.3	-83.44
		663	-4.7	-1.5	-1.6	-0.5	-5.4	-57.11
		670	-1.5	-1.5	-1.6	-0.3	-2.8	-63.98
		669	-1.5	0.3	-1.6	0.5	-2.7	-73.67

		NODE	Mxx	Myy	Mxy	Mmax	Mmin	ANGLE
	Max	Cent	10.8	6.0	2.9	12.2	4.6	25.13
		662	6.8	5.8	2.8	9.2	3.5	39.94
		663	15.0	9.6	3.0	16.2	8.5	22.70
		670	11.7	3.4	2.7	12.4	2.7	15.74
		669	9.8	6.0	2.5	11.0	4.8	26.38
	Min	Cent	-2.4	0.4	0.3	0.4	-2.5	83.67
		662	-4.6	0.0	0.3	0.0	-4.6	86.17
		663	-1.4	0.6	0.3	0.6	-1.5	82.54
		670	-0.4	-0.6	0.1	-0.2	-0.7	63.33
		669	-3.3	0.3	0.1	0.4	-3.3	88.03

		NODE	Vxx	Vyy
	Max	Cent	-4.9	8.3
		662	-5.5	2.9
		663	-5.5	13.8
		670	-3.5	13.8
		669	-3.5	2.9
	Min	Cent	-11.4	0.0
		662	-16.5	-1.5
		663	-16.5	0.5
		670	-6.3	0.5
		669	-6.3	-1.5

LC		NODE	Fxx	Fyy	Fxy	Fmax	Fmin	ANGLE
RC ENV~2	Max	Cent	-0.3	0.9	1.5	1.4	-0.3	68.16
		662	-0.3	1.3	1.5	1.7	-0.3	73.90
		663	-0.3	0.7	1.5	0.9	-0.3	70.92
		670	-0.3	0.7	1.5	1.3	-0.3	58.42
		669	-0.3	1.3	1.5	2.0	-0.3	64.69
	Min	Cent	-2.2	0.5	0.1	0.6	-2.8	84.80
		662	-3.4	0.6	0.1	0.6	-3.8	84.74
		663	-3.4	0.2	0.1	0.6	-3.9	73.40

670	-1.1	0.2	0.1	0.6	-2.0	75.43
669	-1.1	0.6	0.1	0.6	-1.8	84.88

	NODE	Mxx	Myy	Mxy	Mmax	Mmin	ANGLE
Max	Cent	7.4	4.1	2.1	8.4	3.1	25.82
	662	4.4	4.0	2.0	6.2	2.2	42.41
	663	10.6	6.8	2.1	11.4	6.0	22.85
	670	8.1	2.2	1.9	8.6	1.7	15.64
	669	6.4	4.0	1.8	7.3	3.1	27.86
Min	Cent	2.3	1.6	1.1	3.1	0.9	35.82
	662	-0.1	1.5	1.0	2.0	-0.6	64.61
	663	4.8	3.2	1.0	5.5	2.5	28.41
	670	3.4	0.2	1.0	3.7	-0.0	15.81
	669	0.9	1.2	0.8	2.0	0.1	49.04

	NODE	Vxx	Vyy
Max	Cent	-5.0	6.1
	662	-6.8	2.2
	663	-6.8	10.0
	670	-3.1	10.0
	669	-3.1	2.2
Min	Cent	-8.6	1.4
	662	-12.2	-0.8
	663	-12.2	3.1
	670	-5.1	3.1
	669	-5.1	-0.8

ELEM	MAT	SEC	LC	NODE	Fxx	Fyy	Fxy	Fmax	Fmin	ANGLE
640	1	1	SX (RS)	Cent	0.7	0.8	0.9	1.7	-0.2	46.94
				663	0.5	0.8	0.9	1.6	-0.3	49.70
				231	0.5	1.1	0.9	1.8	-0.2	54.51
				234	1.2	1.1	0.9	2.1	0.2	43.98
				670	1.2	0.8	0.9	1.9	0.0	38.95

	NODE	Mxx	Myy	Mxy	Mmax	Mmin	ANGLE
	Cent	2.8	1.0	1.4	3.6	0.3	28.48
	663	7.5	3.2	1.6	8.0	2.7	18.00
	231	4.2	1.1	0.9	4.5	0.8	14.84
	234	4.0	1.3	1.0	4.4	0.9	18.28
	670	3.9	0.6	1.7	4.6	-0.1	22.67

	NODE	Vxx	Vyy
	Cent	9.9	2.5
	663	19.5	5.2
	231	19.5	0.2
	234	0.2	0.2
	670	0.2	5.2

LC	NODE	Fxx	Fyy	Fxy	Fmax	Fmin	ANGLE
SY (RS)	Cent	0.7	2.5	1.9	3.7	-0.5	57.74
	663	1.1	1.7	1.9	3.3	-0.5	49.37
	231	1.1	3.4	1.9	4.5	0.0	60.63
	234	0.5	3.4	1.9	4.3	-0.5	63.82
	670	0.5	1.7	1.9	3.1	-0.9	53.82

	NODE	Mxx	Myy	Mxy	Mmax	Mmin	ANGLE
	Cent	0.8	1.0	0.2	1.1	0.6	58.25
	663	1.5	0.8	0.1	1.5	0.8	10.51
	231	3.0	2.7	0.3	3.2	2.5	32.31
	234	0.8	1.0	0.3	1.2	0.6	52.96
	670	0.6	0.9	0.2	1.0	0.5	69.49

	NODE	Vxx	Vyy
	Cent	3.8	3.8
	663	7.2	2.5
	231	7.2	5.4
	234	0.6	5.4
	670	0.6	2.5

LC		NODE	Fxx	Fyy	Fxy	Fmax	Fmin	ANGLE
RC ENV~1	Max	Cent	0.3	3.2	2.4	4.5	-0.4	60.53
		663	0.8	2.2	2.4	4.0	-0.5	52.77
		231	0.8	4.2	2.4	5.4	-0.4	62.27
		234	0.5	4.2	2.4	5.2	-0.3	66.06
		670	0.5	2.2	2.4	3.7	-0.3	58.15
	Min	Cent	-1.3	-1.9	-1.4	-0.1	-3.0	-37.76
		663	-1.3	-1.2	-1.4	-0.0	-2.6	-58.85
		231	-1.3	-2.6	-1.4	-0.4	-3.5	-32.51
		234	-2.0	-2.6	-1.4	-0.3	-3.5	-30.81
		670	-2.0	-1.2	-1.4	-0.2	-2.7	-75.81

		NODE	Mxx	Myy	Mxy	Mmax	Mmin	ANGLE
	Max	Cent	13.4	5.1	2.0	13.8	4.7	11.18
		663	17.1	10.0	2.4	17.6	9.8	14.68
		231	11.6	5.4	2.5	12.2	5.2	15.27
		234	14.3	2.7	1.9	14.5	2.3	7.88
		670	12.4	3.6	2.0	12.6	3.2	8.16
	Min	Cent	3.1	0.8	-0.9	3.4	0.5	-20.10
		663	-1.2	0.6	-0.9	1.0	-1.6	-67.71
		231	1.9	-0.0	-0.3	2.1	-0.1	-30.66
		234	3.3	-0.6	-0.7	3.4	-0.7	-9.36
		670	0.1	-0.5	-1.3	1.2	-1.3	-41.51

		NODE	Vxx	Vyy
	Max	Cent	6.8	11.3
		663	19.3	13.8
		231	19.3	9.8
		234	-2.9	9.8
		670	-2.9	13.8
	Min	Cent	-12.9	1.2
		663	-19.7	0.5
		231	-19.7	-1.0
		234	-6.5	-1.0
		670	-6.5	0.5

LC		NODE	Fxx	Fyy	Fxy	Fmax	Fmin	ANGLE
RC ENV~2	Max	Cent	-0.3	1.0	1.1	1.5	-0.3	65.90
		663	-0.2	0.8	1.1	1.3	-0.4	58.07
		231	-0.2	1.4	1.1	1.9	-0.4	64.91
		234	-0.3	1.4	1.1	1.8	-0.3	71.20
		670	-0.3	0.8	1.1	1.1	-0.3	66.84
	Min	Cent	-0.9	0.5	0.0	0.5	-1.4	87.24
		663	-0.6	0.4	0.0	0.6	-1.1	79.96
		231	-0.6	0.5	0.0	0.5	-0.9	87.17
		234	-1.4	0.5	0.0	0.5	-1.8	86.78
		670	-1.4	0.4	0.0	0.6	-1.9	80.58

		NODE	Mxx	Myy	Mxy	Mmax	Mmin	ANGLE
	Max	Cent	9.6	3.6	1.3	9.8	3.3	10.48
		663	12.1	7.1	1.6	12.4	7.0	14.44
		231	8.4	3.8	1.7	8.8	3.2	14.57
		234	10.4	1.8	1.2	10.5	1.6	7.18
		670	8.6	2.3	1.2	8.7	2.1	7.75
	Min	Cent	5.7	1.8	0.4	5.8	1.8	6.23
		663	5.6	3.3	0.6	6.0	2.8	15.45
		231	5.9	2.7	0.6	6.1	2.6	11.87
		234	6.9	0.5	0.3	6.9	0.5	5.36
		670	3.7	0.3	0.3	3.8	0.3	6.36

		NODE	Vxx	Vyy
	Max	Cent	2.0	8.3
		663	8.9	10.0
		231	8.9	6.5
		234	-2.9	6.5
		670	-2.9	10.0
	Min	Cent	-4.2	3.3
		663	-4.2	3.1
		231	-4.2	3.5
		234	-6.1	3.5
		670	-6.1	3.1

ELEM	MAT	SEC	LC		NODE	Fxx	Fyy	Fxy	Fmax	Fmin	ANGLE
641	1	1	SX	(RS)	Cent	0.2	0.2	0.6	0.8	-0.4	44.03
					624	0.4	0.0	0.6	0.9	-0.4	35.56
					664	0.4	0.3	0.6	1.0	-0.2	42.60
					671	0.1	0.3	0.6	0.8	-0.4	50.51
					632	0.1	0.0	0.6	0.7	-0.5	43.19

		NODE	Mxx	Myy	Mxy	Mmax	Mmin	ANGLE
		Cent	1.1	0.2	1.3	2.0	-0.7	35.01
		624	2.0	0.4	1.7	3.1	-0.7	32.60
		664	1.8	0.4	1.1	2.4	-0.2	29.51
		671	0.9	0.7	0.9	1.7	-0.0	41.73
		632	0.1	0.0	1.4	1.5	-1.4	43.97

		NODE	Vxx	Vyy
		Cent	1.2	0.2
		624	0.9	0.0
		664	0.9	0.3
		671	2.1	0.3
		632	2.1	0.0

LC		NODE	Fxx	Fyy	Fxy	Fmax	Fmin	ANGLE
SY	(RS)	Cent	0.3	1.2	0.6	1.5	-0.0	62.76
		624	0.4	1.4	0.6	1.7	0.1	64.89
		664	0.4	1.0	0.6	1.4	-0.0	58.18
		671	0.4	1.0	0.6	1.4	-0.0	57.86
		632	0.4	1.4	0.6	1.7	0.1	64.66

		NODE	Mxx	Myy	Mxy	Mmax	Mmin	ANGLE
		Cent	1.3	0.9	0.3	1.4	0.7	26.50
		624	1.9	0.8	0.2	2.0	0.7	9.13
		664	1.5	0.8	0.4	1.7	0.6	27.04
		671	0.8	1.5	0.3	1.7	0.7	67.95
		632	1.0	1.7	0.1	1.7	1.0	82.31

		NODE	Vxx	Vyy
		Cent	0.7	3.3
		624	0.9	3.3
		664	0.9	3.2
		671	0.5	3.2
		632	0.5	3.3

LC		NODE	Fxx	Fyy	Fxy	Fmax	Fmin	ANGLE
RC ENV~1	Max	Cent	-0.3	2.0	0.7	2.2	-0.4	75.26
		624	-0.2	2.3	0.7	2.4	-0.4	76.41
		664	-0.2	1.9	0.7	2.0	-0.4	73.97
		671	-0.1	1.9	0.7	2.0	-0.3	72.97
		632	-0.1	2.3	0.7	2.4	-0.3	75.68
	Min	Cent	-1.7	-0.4	-0.6	0.0	-1.7	-55.79
		624	-1.9	-0.6	-0.6	-0.2	-1.9	-54.39
		664	-1.9	-0.2	-0.6	0.1	-1.9	-61.76
		671	-1.5	-0.2	-0.6	0.2	-1.5	-59.78
		632	-1.5	-0.6	-0.6	-0.1	-1.5	-51.88

		NODE	Mxx	Myy	Mxy	Mmax	Mmin	ANGLE
	Max	Cent	4.0	-2.0	0.7	6.0	-2.9	-26.28
		624	3.9	-2.2	1.1	5.5	-2.9	-28.66
		664	7.1	0.8	0.2	9.8	-1.4	-28.58
		671	5.6	-1.1	0.4	7.3	-2.2	-23.14
		632	0.1	-3.8	1.4	1.5	-3.8	-23.89
	Min	Cent	-2.7	-4.6	-4.1	-2.5	-5.2	-20.31
		624	-3.4	-4.4	-4.3	-2.9	-6.0	-28.32
		664	-2.2	-3.0	-4.9	-0.9	-4.4	-34.16
		671	-2.2	-5.2	-4.0	-1.9	-5.4	-12.89
		632	-3.8	-7.5	-3.3	-3.8	-8.1	-2.77

		NODE	Vxx	Vyy

Max	Cent	-0.5	6.9
	624	-0.3	7.4
	664	-0.3	6.4
	671	-0.1	6.4
	632	-0.1	7.4
Min	Cent	-7.8	-0.4
	624	-7.1	-0.2
	664	-7.1	-0.5
	671	-8.9	-0.5
	632	-8.9	-0.2

LC		NODE	Fxx	Fyy	Fxy	Fmax	Fmin	ANGLE
RC ENV~2	Max	Cent	-0.3	1.4	0.1	1.4	-0.3	89.75
		624	-0.3	1.5	0.1	1.5	-0.4	89.77
		664	-0.3	1.4	0.1	1.4	-0.4	88.89
		671	-0.3	1.4	0.1	1.4	-0.3	88.78
		632	-0.3	1.5	0.1	1.5	-0.3	89.74
	Min	Cent	-1.2	0.8	-0.0	0.8	-1.2	87.53
		624	-1.4	0.8	-0.0	0.8	-1.4	87.54
		664	-1.4	0.8	-0.0	0.8	-1.4	-89.58
		671	-1.1	0.8	-0.0	0.8	-1.1	-89.51
		632	-1.1	0.8	-0.0	0.8	-1.1	87.39

		NODE	Mxx	Myy	Mxy	Mmax	Mmin	ANGLE
	Max	Cent	2.3	-1.9	-0.5	3.6	-3.4	-25.25
		624	2.3	-2.0	-0.6	3.3	-3.2	-27.49
		664	4.4	0.1	-0.9	6.2	-1.7	-28.19
		671	3.4	-1.3	-0.4	4.4	-2.4	-22.20
		632	-0.4	-4.1	-0.1	0.4	-5.1	-22.01
	Min	Cent	-1.5	-3.8	-2.7	-1.4	-3.9	-12.60
		624	-1.5	-3.6	-2.9	-1.3	-4.1	-15.03
		664	-0.5	-2.2	-3.3	-0.1	-2.6	-24.34
		671	-1.3	-3.9	-2.6	-1.2	-4.0	-9.23
		632	-2.8	-5.8	-2.1	-2.8	-6.1	-1.49

		NODE	Vxx	Vyy
	Max	Cent	-1.6	5.0
		624	-1.0	5.4
		664	-1.0	4.6
		671	-2.0	4.6
		632	-2.0	5.4
	Min	Cent	-5.2	2.6
		624	-4.7	2.9
		664	-4.7	2.3
		671	-6.0	2.3
		632	-6.0	2.9

ELEM	MAT	SEC	LC		NODE	Fxx	Fyy	Fxy	Fmax	Fmin	ANGLE
642	1	1	SX (RS)		Cent	0.4	0.4	0.5	0.9	-0.2	44.03
					664	0.4	0.3	0.5	0.9	-0.2	42.34
					665	0.4	0.4	0.5	1.0	-0.1	44.17
					672	0.4	0.4	0.5	0.9	-0.2	45.79
					671	0.4	0.3	0.5	0.9	-0.2	43.96

		NODE	Mxx	Myy	Mxy	Mmax	Mmin	ANGLE
		Cent	1.7	0.4	0.5	1.9	0.2	19.23
		664	2.0	0.4	0.6	2.2	0.2	18.63
		665	2.5	0.6	0.4	2.6	0.5	11.11
		672	1.4	0.7	0.4	1.6	0.5	25.23
		671	1.1	0.7	0.7	1.6	0.1	37.66

		NODE	Vxx	Vyy
		Cent	1.0	1.0
		664	1.1	0.3
		665	1.1	1.6
		672	0.9	1.6
		671	0.9	0.3

LC	NODE	Fxx	Fyy	Fxy	Fmax	Fmin	ANGLE

```
-------- ---- ------ ---------- ---------- ---------- ---------- ---------- ----------
      SY (RS)   Cent        0.4        0.7        1.5        2.0       -1.0      48.23
                 664        0.3        1.1        1.5        2.2       -0.9      52.22
                 665        0.3        0.5        1.5        1.9       -1.1      47.05
                 672        0.4        0.5        1.5        2.0       -1.0      45.75
                 671        0.4        1.1        1.5        2.3       -0.8      50.99

                NODE        Mxx        Myy        Mxy       Mmax       Mmin      ANGLE
            ---- ------ ---------- ---------- ---------- ---------- ---------- ----------
                Cent        0.6        0.9        0.4        1.2        0.3      57.22
                 664        0.9        0.8        0.4        1.3        0.4      39.75
                 665        0.6        0.7        0.3        0.9        0.4      53.56
                 672        0.6        1.3        0.3        1.4        0.5      71.13
                 671        0.8        1.5        0.4        1.7        0.6      63.89

                NODE        Vxx        Vyy
            ---- ------ ---------- ----------
                Cent        1.4        2.4
                 664        1.9        3.2
                 665        1.9        1.7
                 672        0.9        1.7
                 671        0.9        3.2


      LC        NODE        Fxx        Fyy        Fxy       Fmax       Fmin      ANGLE
-------- ---- ------ ---------- ---------- ---------- ---------- ---------- ----------
RC ENV~1  Max   Cent       -0.2        1.8        1.6        2.4       -0.4      59.07
                 664       -0.2        1.9        1.6        2.7       -0.4      62.69
                 665       -0.2        1.7        1.6        2.2       -0.4      58.49
                 672       -0.1        1.7        1.6        2.3       -0.4      56.25
                 671       -0.1        1.9        1.6        2.7       -0.4      60.80
           Min   Cent       -1.5        0.1       -1.4        0.6       -1.9     -72.63
                 664       -1.7       -0.3       -1.4        0.6       -2.1     -74.24
                 665       -1.7        0.2       -1.4        0.5       -1.9     -73.01
                 672       -1.3        0.2       -1.4        0.5       -1.9     -70.68
                 671       -1.3       -0.3       -1.4        0.6       -2.1     -72.22

                NODE        Mxx        Myy        Mxy       Mmax       Mmin      ANGLE
            ---- ------ ---------- ---------- ---------- ---------- ---------- ----------
           Max   Cent        5.3        1.0       -0.4        8.4       -1.8     -32.19
                 664        5.3        0.4       -0.6        8.8       -2.0     -32.69
                 665        5.7        2.9       -0.9        9.9       -0.9     -37.88
                 672        6.5        2.4       -0.2        8.9        0.3     -30.35
                 671        3.9       -1.4        0.1        6.0       -2.4     -26.79
           Min   Cent       -3.4       -3.2       -4.9       -1.5       -4.6     -52.07
                 664       -3.4       -3.1       -5.5       -1.2       -4.9     -49.86
                 665       -4.1       -1.7       -5.4       -0.7       -5.0     -63.86
                 672       -2.9       -3.1       -4.2       -1.6       -3.8     -50.68
                 671       -3.3       -5.4       -4.3       -2.7       -5.9     -20.50

                NODE        Vxx        Vyy
            ---- ------ ---------- ----------
           Max   Cent        1.6        5.2
                 664        2.8        6.4
                 665        2.8        4.1
                 672        0.4        4.1
                 671        0.4        6.4
           Min   Cent       -2.9       -0.3
                 664       -1.6       -0.5
                 665       -1.6       -0.1
                 672       -4.2       -0.1
                 671       -4.2       -0.5


      LC        NODE        Fxx        Fyy        Fxy       Fmax       Fmin      ANGLE
-------- ---- ------ ---------- ---------- ---------- ---------- ---------- ----------
RC ENV~2  Max   Cent       -0.4        1.3        0.1        1.3       -0.4      86.68
                 664       -0.5        1.4        0.1        1.4       -0.5      88.11
                 665       -0.5        1.3        0.1        1.3       -0.5      86.81
                 672       -0.3        1.3        0.1        1.3       -0.3      86.35
                 671       -0.3        1.4        0.1        1.4       -0.3      87.86
           Min   Cent       -1.1        0.7        0.0        0.7       -1.1      88.71
                 664       -1.3        0.8        0.0        0.8       -1.3      85.27
                 665       -1.3        0.7        0.0        0.7       -1.3      88.74
                 672       -0.9        0.7        0.0        0.7       -0.9      88.55
                 671       -0.9        0.8        0.0        0.8       -0.9      84.58

                NODE        Mxx        Myy        Mxy       Mmax       Mmin      ANGLE
            ---- ------ ---------- ---------- ---------- ---------- ---------- ----------
```

Max	Cent	3.1	0.2	-0.9	5.2	-1.7	-32.35
	664	3.2	-0.1	-1.2	5.5	-2.5	-32.70
	665	3.3	1.7	-1.2	6.3	-1.0	-38.77
	672	3.8	1.2	-0.6	5.5	-0.2	-30.59
	671	2.1	-1.6	-0.6	3.5	-2.9	-26.19
Min	Cent	-1.7	-2.3	-3.3	-1.0	-3.1	-37.57
	664	-1.5	-2.4	-3.7	-0.6	-3.2	-35.14
	665	-1.7	-1.0	-3.7	-0.1	-2.7	-53.32
	672	-1.5	-1.9	-2.8	-1.0	-2.5	-39.27
	671	-2.3	-4.1	-2.8	-2.1	-4.5	-17.38

	NODE	Vxx	Vyy
Max	Cent	0.7	3.8
	664	2.1	4.6
	665	2.1	3.0
	672	-0.3	3.0
	671	-0.3	4.6
Min	Cent	-1.8	1.6
	664	-0.8	2.3
	665	-0.8	0.9
	672	-2.8	0.9
	671	-2.8	2.3

ELEM	MAT	SEC	LC	NODE	Fxx	Fyy	Fxy	Fmax	Fmin	ANGLE
643	1	1	SX (RS)	Cent	0.8	0.3	0.5	1.1	-0.0	33.33
				665	1.0	0.5	0.5	1.3	0.2	30.10
				666	1.0	0.2	0.5	1.3	-0.0	25.29
				673	0.5	0.2	0.5	0.9	-0.2	35.98
				672	0.5	0.5	0.5	1.0	-0.0	42.83

NODE	Mxx	Myy	Mxy	Mmax	Mmin	ANGLE
Cent	1.7	0.4	0.5	1.9	0.3	18.26
665	2.2	0.5	0.5	2.3	0.4	14.63
666	1.9	0.6	0.6	2.2	0.4	20.87
673	1.7	0.5	0.5	1.9	0.3	19.17
672	1.4	0.7	0.4	1.6	0.5	25.10

NODE	Vxx	Vyy
Cent	1.7	1.3
665	2.1	1.6
666	2.1	1.0
673	1.4	1.0
672	1.4	1.6

LC	NODE	Fxx	Fyy	Fxy	Fmax	Fmin	ANGLE
SY (RS)	Cent	0.6	0.5	1.6	2.1	-1.0	43.78
	665	0.8	0.5	1.6	2.2	-0.9	41.90
	666	0.8	0.5	1.6	2.2	-0.9	41.87
	673	0.4	0.5	1.6	2.0	-1.1	45.71
	672	0.4	0.5	1.6	2.0	-1.1	45.74

NODE	Mxx	Myy	Mxy	Mmax	Mmin	ANGLE
Cent	0.5	1.1	0.2	1.2	0.5	72.82
665	0.4	0.7	0.2	0.8	0.3	62.05
666	0.7	1.2	0.3	1.3	0.6	62.44
673	0.6	1.5	0.2	1.5	0.5	76.07
672	0.6	1.3	0.2	1.4	0.5	75.56

NODE	Vxx	Vyy
Cent	0.7	1.2
665	0.9	1.7
666	0.9	0.7
673	0.5	0.7
672	0.5	1.7

LC		NODE	Fxx	Fyy	Fxy	Fmax	Fmin	ANGLE
RC ENV~1	Max	Cent	0.2	1.6	1.7	2.4	-0.1	54.05
		665	0.4	1.7	1.7	2.5	0.0	53.44

		666	0.4	1.5	1.7	2.5	-0.1	52.95
		673	0.1	1.5	1.7	2.4	-0.3	54.68
		672	0.1	1.7	1.7	2.4	-0.2	55.15
	Min	Cent	-1.4	0.2	-1.4	0.5	-2.0	-77.99
		665	-1.7	0.2	-1.4	0.4	-2.3	-79.50
		666	-1.7	0.2	-1.4	0.5	-2.3	-80.38
		673	-1.1	0.2	-1.4	0.6	-1.9	-76.30
		672	-1.1	0.2	-1.4	0.4	-1.8	-74.54

		NODE	Mxx	Myy	Mxy	Mmax	Mmin	ANGLE
	Max	Cent	4.5	3.2	-0.2	7.9	0.6	-39.82
		665	4.1	2.6	-0.6	8.2	-0.9	-40.52
		666	4.0	4.0	-0.3	7.8	0.8	-46.29
		673	5.9	4.4	0.1	8.2	2.6	-38.95
		672	4.8	2.1	-0.2	7.4	-0.0	-33.42
	Min	Cent	-4.2	-2.1	-4.1	-1.5	-4.7	-57.84
		665	-4.7	-1.8	-4.8	-1.1	-5.3	-67.65
		666	-4.8	-1.5	-4.1	-1.0	-5.2	-66.40
		673	-3.9	-2.0	-3.4	-1.7	-4.2	-61.65
		672	-3.8	-3.3	-4.0	-2.3	-4.4	-39.59

		NODE	Vxx	Vyy
	Max	Cent	2.2	2.9
		665	3.0	4.1
		666	3.0	1.7
		673	1.5	1.7
		672	1.5	4.1
	Min	Cent	-1.2	-0.2
		665	-1.3	-0.1
		666	-1.3	-0.5
		673	-1.7	-0.5
		672	-1.7	-0.1

LC		NODE	Fxx	Fyy	Fxy	Fmax	Fmin	ANGLE
RC ENV~2	Max	Cent	-0.4	1.2	0.3	1.2	-0.5	83.30
		665	-0.5	1.3	0.3	1.3	-0.5	83.92
		666	-0.5	1.1	0.3	1.1	-0.5	83.55
		673	-0.3	1.1	0.3	1.1	-0.3	82.54
		672	-0.3	1.3	0.3	1.3	-0.3	83.03
	Min	Cent	-1.0	0.7	0.1	0.7	-1.0	84.75
		665	-1.2	0.7	0.1	0.7	-1.2	86.54
		666	-1.2	0.6	0.1	0.6	-1.2	85.14
		673	-0.8	0.6	0.1	0.6	-0.9	83.87
		672	-0.8	0.7	0.1	0.7	-0.8	85.64

		NODE	Mxx	Myy	Mxy	Mmax	Mmin	ANGLE
	Max	Cent	2.4	1.8	-0.7	4.8	-0.0	-41.48
		665	2.2	1.5	-1.0	5.0	-1.1	-41.86
		666	2.0	2.5	-0.8	4.8	0.1	-48.62
		673	3.3	2.7	-0.3	5.0	1.4	-41.11
		672	2.6	1.0	-0.5	4.4	-0.5	-34.19
	Min	Cent	-2.5	-1.0	-2.7	-0.7	-2.9	-69.37
		665	-2.6	-1.2	-3.2	-0.7	-3.1	-63.03
		666	-2.9	-0.3	-2.8	-0.1	-3.3	-74.04
		673	-2.3	-0.6	-2.2	-0.5	-2.5	-76.08
		672	-2.5	-2.1	-2.6	-1.6	-3.0	-57.94

		NODE	Vxx	Vyy
	Max	Cent	1.5	2.1
		665	2.2	3.0
		666	2.2	1.3
		673	0.8	1.3
		672	0.8	3.0
	Min	Cent	-0.7	0.3
		665	-0.3	0.9
		666	-0.3	-0.2
		673	-1.1	-0.2
		672	-1.1	0.9

ELEM	MAT	SEC	LC		NODE	Fxx	Fyy	Fxy	Fmax	Fmin	ANGLE
644	1	1	SX (RS)		Cent	0.9	0.2	0.6	1.2	-0.1	28.65

		666	1.1	0.2	0.6	1.4	-0.1	25.11
		667	1.1	0.2	0.6	1.4	-0.1	25.04
		674	0.7	0.2	0.6	1.1	-0.2	32.49
		673	0.7	0.2	0.6	1.1	-0.2	32.58

		NODE	Mxx	Myy	Mxy	Mmax	Mmin	ANGLE
		Cent	2.0	0.5	0.6	2.3	0.3	19.70
		666	1.9	0.6	0.6	2.1	0.4	22.42
		667	2.4	0.7	0.7	2.7	0.5	18.97
		674	2.3	0.5	0.6	2.5	0.3	16.67
		673	1.7	0.5	0.6	1.9	0.3	21.65

		NODE	Vxx	Vyy
		Cent	1.8	0.9
		666	1.9	1.0
		667	1.9	0.8
		674	1.7	0.8
		673	1.7	1.0

LC		NODE	Fxx	Fyy	Fxy	Fmax	Fmin	ANGLE
SY (RS)		Cent	0.5	0.4	1.4	1.9	-1.0	43.92
		666	0.6	0.5	1.4	2.0	-0.9	43.89
		667	0.6	0.3	1.4	1.9	-1.0	42.04
		674	0.4	0.3	1.4	1.8	-1.0	43.82
		673	0.4	0.5	1.4	1.9	-1.0	45.68

		NODE	Mxx	Myy	Mxy	Mmax	Mmin	ANGLE
		Cent	0.6	1.4	0.4	1.5	0.4	67.22
		666	0.6	1.1	0.4	1.3	0.4	62.89
		667	0.6	1.3	0.5	1.5	0.4	63.21
		674	0.6	1.6	0.4	1.7	0.5	69.97
		673	0.6	1.5	0.3	1.6	0.5	71.50

		NODE	Vxx	Vyy
		Cent	0.1	0.7
		666	0.1	0.7
		667	0.1	0.6
		674	0.2	0.6
		673	0.2	0.7

LC		NODE	Fxx	Fyy	Fxy	Fmax	Fmin	ANGLE
RC ENV~1	Max	Cent	0.4	1.5	1.7	2.3	-0.2	54.14
		666	0.5	1.5	1.7	2.3	-0.2	55.17
		667	0.5	1.4	1.7	2.2	-0.2	53.57
		674	0.3	1.4	1.7	2.2	-0.3	52.98
		673	0.3	1.5	1.7	2.4	-0.3	54.60
	Min	Cent	-1.5	0.3	-1.2	0.6	-1.7	-80.39
		666	-1.8	0.2	-1.2	0.6	-1.9	-81.79
		667	-1.8	0.3	-1.2	0.5	-1.9	-81.73
		674	-1.1	0.3	-1.2	0.6	-1.6	-78.54
		673	-1.1	0.2	-1.2	0.6	-1.6	-78.66

		NODE	Mxx	Myy	Mxy	Mmax	Mmin	ANGLE
	Max	Cent	4.8	4.4	0.3	6.7	2.8	-47.35
		666	3.5	3.9	0.1	6.5	1.3	-48.85
		667	4.4	4.6	0.4	6.2	2.9	-52.93
		674	6.1	5.3	0.5	7.1	4.3	-35.96
		673	5.0	4.2	0.3	7.0	2.6	-41.98
	Min	Cent	-4.8	-1.6	-2.7	-1.3	-5.0	-71.48
		666	-5.1	-1.5	-3.2	-1.2	-5.4	-71.05
		667	-5.2	-1.1	-2.4	-0.9	-5.4	-73.33
		674	-4.7	-1.5	-2.1	-1.3	-4.8	-73.17
		673	-4.6	-2.1	-2.8	-1.9	-4.8	-68.22

		NODE	Vxx	Vyy
	Max	Cent	1.2	1.3
		666	1.4	1.7
		667	1.4	1.1
		674	1.0	1.1

		673	1.0	1.7
	Min	Cent	-2.4	-0.7
		666	-2.5	-0.5
		667	-2.5	-1.0
		674	-2.4	-1.0
		673	-2.4	-0.5

LC		NODE	Fxx	Fyy	Fxy	Fmax	Fmin	ANGLE
RC ENV~2	Max	Cent	-0.4	1.1	0.4	1.2	-0.4	79.15
		666	-0.5	1.1	0.4	1.2	-0.5	80.24
		667	-0.5	1.0	0.4	1.1	-0.5	80.00
		674	-0.2	1.0	0.4	1.1	-0.3	77.80
		673	-0.2	1.1	0.4	1.2	-0.3	78.14
	Min	Cent	-1.0	0.6	0.2	0.7	-1.1	79.47
		666	-1.3	0.6	0.2	0.7	-1.3	80.81
		667	-1.3	0.6	0.2	0.6	-1.3	80.47
		674	-0.8	0.6	0.2	0.6	-0.9	77.70
		673	-0.8	0.6	0.2	0.7	-0.9	78.24

	NODE	Mxx	Myy	Mxy	Mmax	Mmin	ANGLE
Max	Cent	2.5	2.8	-0.2	4.0	1.5	-51.14
	666	1.6	2.4	-0.4	4.0	0.4	-52.11
	667	2.3	2.9	-0.2	3.8	1.5	-57.04
	674	3.5	3.4	-0.0	4.3	2.6	-49.48
	673	2.6	2.6	-0.2	4.1	1.3	-45.13
Min	Cent	-3.0	-0.2	-1.7	-0.2	-3.0	-82.39
	666	-3.3	-0.4	-2.1	-0.3	-3.5	-81.35
	667	-3.0	0.1	-1.6	0.2	-3.1	-83.27
	674	-2.5	0.0	-1.4	0.0	-2.5	-85.26
	673	-3.0	-0.7	-1.9	-0.7	-3.0	-79.24

	NODE	Vxx	Vyy
Max	Cent	0.2	0.9
	666	0.3	1.3
	667	0.3	0.6
	674	0.0	0.6
	673	0.0	1.3
Min	Cent	-1.3	-0.3
	666	-1.2	-0.2
	667	-1.2	-0.6
	674	-1.3	-0.6
	673	-1.3	-0.2

ELEM	MAT	SEC	LC		NODE	Fxx	Fyy	Fxy	Fmax	Fmin	ANGLE
645	1	1	SX (RS)		Cent	1.0	0.2	0.6	1.4	-0.2	27.97
					667	1.3	0.2	0.6	1.6	-0.1	24.15
					668	1.3	0.2	0.6	1.6	-0.1	24.74
					675	0.8	0.2	0.6	1.2	-0.2	32.55
					674	0.8	0.2	0.6	1.2	-0.2	31.71

	NODE	Mxx	Myy	Mxy	Mmax	Mmin	ANGLE
	Cent	2.8	0.6	0.7	3.0	0.4	16.48
	667	2.4	0.7	0.7	2.7	0.5	19.58
	668	3.3	0.8	0.8	3.5	0.6	15.71
	675	3.2	0.5	0.7	3.4	0.3	14.23
	674	2.4	0.5	0.7	2.7	0.3	17.50

	NODE	Vxx	Vyy
	Cent	1.7	0.8
	667	1.8	0.8
	668	1.8	0.8
	675	1.6	0.8
	674	1.6	0.8

LC		NODE	Fxx	Fyy	Fxy	Fmax	Fmin	ANGLE
SY (RS)		Cent	0.5	0.2	1.5	1.8	-1.1	42.36
		667	0.6	0.3	1.5	1.9	-1.0	42.29
		668	0.6	0.1	1.5	1.8	-1.1	40.38
		675	0.4	0.1	1.5	1.7	-1.2	42.33

		674	0.4	0.3	1.5	1.8	-1.1	44.26

	NODE	Mxx	Myy	Mxy	Mmax	Mmin	ANGLE
	Cent	0.6	1.4	0.5	1.6	0.4	65.35
	667	0.6	1.3	0.5	1.5	0.4	62.35
	668	0.6	1.2	0.5	1.5	0.3	61.57
	675	0.6	1.5	0.5	1.7	0.4	68.25
	674	0.6	1.6	0.4	1.8	0.4	68.32

	NODE	Vxx	Vyy
	Cent	0.1	0.6
	667	0.2	0.6
	668	0.2	0.6
	675	0.1	0.6
	674	0.1	0.6

LC		NODE	Fxx	Fyy	Fxy	Fmax	Fmin	ANGLE
RC ENV~1	Max	Cent	0.5	1.4	1.8	2.3	-0.4	52.19
		667	0.6	1.4	1.8	2.3	-0.3	53.20
		668	0.6	1.4	1.8	2.2	-0.3	51.86
		675	0.4	1.4	1.8	2.3	-0.3	51.09
		674	0.4	1.4	1.8	2.4	-0.3	52.45
	Min	Cent	-1.6	0.5	-1.1	0.5	-1.8	-82.88
		667	-2.0	0.3	-1.1	0.5	-2.2	-84.03
		668	-2.0	0.5	-1.1	0.5	-2.2	-83.96
		675	-1.2	0.5	-1.1	0.5	-1.5	-81.19
		674	-1.2	0.3	-1.1	0.5	-1.5	-81.35

	NODE	Mxx	Myy	Mxy	Mmax	Mmin	ANGLE
Max	Cent	5.8	4.9	0.8	6.0	4.8	-21.97
	667	4.2	4.5	0.7	5.3	3.6	-58.03
	668	5.9	4.9	0.9	5.9	4.8	-5.10
	675	7.3	5.3	1.0	7.3	5.3	-3.68
	674	6.0	5.2	0.7	6.5	4.7	-32.84
Min	Cent	-5.0	-1.1	-1.2	-1.1	-5.0	-78.00
	667	-5.4	-1.2	-1.5	-1.1	-5.5	-79.33
	668	-5.0	-0.7	-0.9	-0.6	-5.0	-79.81
	675	-4.5	-1.2	-0.9	-1.1	-4.5	-72.69
	674	-5.0	-1.5	-1.6	-1.4	-5.1	-76.42

	NODE	Vxx	Vyy
Max	Cent	-0.5	1.2
	667	-0.5	1.1
	668	-0.5	1.4
	675	-0.5	1.4
	674	-0.5	1.1
Min	Cent	-3.8	-0.9
	667	-4.0	-1.0
	668	-4.0	-0.8
	675	-3.7	-0.8
	674	-3.7	-1.0

LC		NODE	Fxx	Fyy	Fxy	Fmax	Fmin	ANGLE
RC ENV~2	Max	Cent	-0.3	1.0	0.7	1.2	-0.4	74.44
		667	-0.4	1.0	0.7	1.2	-0.5	76.08
		668	-0.4	1.0	0.7	1.2	-0.5	76.06
		675	-0.2	1.0	0.7	1.2	-0.3	72.43
		674	-0.2	1.0	0.7	1.2	-0.3	72.45
	Min	Cent	-1.1	0.6	0.3	0.7	-1.3	74.68
		667	-1.4	0.6	0.3	0.7	-1.6	76.38
		668	-1.4	0.6	0.3	0.7	-1.6	76.27
		675	-0.8	0.6	0.3	0.7	-1.0	72.56
		674	-0.8	0.6	0.3	0.7	-1.0	72.73

	NODE	Mxx	Myy	Mxy	Mmax	Mmin	ANGLE
Max	Cent	3.3	3.2	0.2	3.5	3.0	-35.87
	667	2.1	2.9	0.1	3.2	1.9	-63.95
	668	3.4	3.2	0.3	3.4	3.1	-2.76
	675	4.4	3.4	0.3	4.4	3.4	-1.75
	674	3.3	3.3	0.1	3.8	2.8	-53.83

Min	Cent	-2.4	0.2	-0.8	0.2	-2.4	89.90
	667	-3.2	0.1	-1.0	0.1	-3.2	-88.65
	668	-1.9	0.5	-0.5	0.5	-1.9	87.18
	675	-1.6	0.3	-0.5	0.3	-1.6	86.14
	674	-2.7	-0.0	-1.0	-0.0	-2.7	-88.24

	NODE	Vxx	Vyy
Max	Cent	-1.3	0.8
	667	-1.4	0.6
	668	-1.4	1.1
	675	-1.3	1.1
	674	-1.3	0.6
Min	Cent	-2.6	-0.5
	667	-2.7	-0.6
	668	-2.7	-0.4
	675	-2.4	-0.4
	674	-2.4	-0.6

ELEM	MAT	SEC	LC		NODE	Fxx	Fyy	Fxy	Fmax	Fmin	ANGLE
646	1	1	SX	(RS)	Cent	1.1	0.3	0.7	1.5	-0.1	30.91
					668	1.4	0.2	0.7	1.7	-0.1	24.53
					669	1.4	0.4	0.7	1.8	0.1	27.77
					676	0.7	0.4	0.7	1.3	-0.1	39.85
					675	0.7	0.2	0.7	1.2	-0.3	35.02

	NODE	Mxx	Myy	Mxy	Mmax	Mmin	ANGLE
	Cent	3.7	0.6	0.8	3.9	0.4	14.37
	668	3.4	0.8	0.8	3.6	0.6	16.18
	669	4.3	1.0	0.9	4.5	0.7	13.54
	676	3.8	0.4	0.9	4.0	0.2	13.70
	675	3.3	0.5	0.8	3.5	0.3	14.95

	NODE	Vxx	Vyy
	Cent	1.3	1.0
	668	1.6	0.8
	669	1.6	1.2
	676	1.0	1.2
	675	1.0	0.8

LC		NODE	Fxx	Fyy	Fxy	Fmax	Fmin	ANGLE
SY	(RS)	Cent	0.5	0.3	1.7	2.1	-1.3	43.35
		668	0.7	0.1	1.7	2.1	-1.3	40.16
		669	0.7	0.5	1.7	2.3	-1.1	43.34
		676	0.3	0.5	1.7	2.1	-1.3	46.84
		675	0.3	0.1	1.7	1.9	-1.5	43.62

	NODE	Mxx	Myy	Mxy	Mmax	Mmin	ANGLE
	Cent	0.6	1.3	0.4	1.5	0.3	64.96
	668	0.7	1.2	0.5	1.5	0.5	58.81
	669	0.5	0.9	0.4	1.2	0.2	57.74
	676	0.4	1.5	0.4	1.6	0.3	70.77
	675	0.6	1.5	0.4	1.7	0.4	68.24

	NODE	Vxx	Vyy
	Cent	0.5	0.9
	668	0.6	0.6
	669	0.6	1.2
	676	0.3	1.2
	675	0.3	0.6

LC		NODE	Fxx	Fyy	Fxy	Fmax	Fmin	ANGLE
RC ENV~1	Max	Cent	0.5	1.3	2.2	2.7	-0.3	51.43
		668	0.6	1.4	2.2	2.6	-0.4	50.48
		669	0.6	1.3	2.2	2.8	-0.4	52.44
		676	0.3	1.3	2.2	2.8	-0.2	52.54
		675	0.3	1.4	2.2	2.6	-0.2	50.59
	Min	Cent	-1.7	0.3	-1.2	0.3	-2.1	-84.00
		668	-2.3	0.5	-1.2	0.5	-2.7	-85.55

669	-2.3	0.1	-1.2	0.2	-2.7	-84.95
676	-1.1	0.1	-1.2	0.2	-1.8	-80.61
675	-1.1	0.5	-1.2	0.5	-1.9	-82.47

	NODE	Mxx	Myy	Mxy	Mmax	Mmin	ANGLE
Max	Cent	7.9	4.8	1.3	8.1	4.6	14.18
	668	6.1	4.9	1.3	6.4	4.5	24.77
	669	8.5	4.8	1.5	8.9	4.5	16.92
	676	9.2	4.4	1.3	9.3	4.3	9.89
	675	7.8	5.4	1.1	7.8	5.3	8.13
Min	Cent	-4.0	-0.8	-0.4	-0.8	-4.1	67.78
	668	-5.0	-0.7	-0.3	-0.7	-5.0	89.65
	669	-3.6	-0.1	-0.3	-0.1	-3.6	-85.83
	676	-3.1	-1.3	-0.4	-0.2	-3.1	-81.88
	675	-4.5	-1.2	-0.5	-1.2	-4.5	-78.51

	NODE	Vxx	Vyy
Max	Cent	-2.5	2.4
	668	-2.5	1.4
	669	-2.5	3.3
	676	-2.2	3.3
	675	-2.2	1.4
Min	Cent	-5.4	-0.3
	668	-6.5	-0.8
	669	-6.5	0.1
	676	-4.4	0.1
	675	-4.4	-0.8

LC		NODE	Fxx	Fyy	Fxy	Fmax	Fmin	ANGLE
RC ENV~2	Max	Cent	-0.2	1.0	0.9	1.3	-0.3	69.31
		668	-0.3	1.0	0.9	1.3	-0.4	72.43
		669	-0.3	0.9	0.9	1.1	-0.4	73.01
		676	-0.2	0.9	0.9	1.2	-0.2	65.18
		675	-0.2	1.0	0.9	1.4	-0.2	66.94
	Min	Cent	-1.2	0.5	0.3	0.7	-1.5	72.14
		668	-1.6	0.6	0.3	0.7	-1.9	73.94
		669	-1.6	0.5	0.3	0.7	-1.9	70.69
		676	-0.8	0.5	0.3	0.7	-1.2	69.95
		675	-0.8	0.6	0.3	0.7	-1.2	70.04

	NODE	Mxx	Myy	Mxy	Mmax	Mmin	ANGLE
Max	Cent	4.9	3.1	0.8	5.1	2.9	17.20
	668	3.6	3.2	0.8	3.9	2.8	34.92
	669	5.5	3.2	1.0	5.9	2.9	18.82
	676	5.9	2.8	0.8	6.1	2.7	11.00
	675	4.7	3.5	0.5	4.8	3.4	12.37
Min	Cent	-0.6	0.4	0.0	0.6	-0.7	71.19
	668	-1.9	0.5	-0.0	0.6	-2.0	80.60
	669	0.5	0.8	0.3	1.2	0.1	53.37
	676	0.4	0.0	0.0	0.6	-0.2	31.38
	675	-1.4	0.3	-0.2	0.3	-1.4	82.41

	NODE	Vxx	Vyy
Max	Cent	-2.4	1.8
	668	-2.7	1.1
	669	-2.7	2.4
	676	-2.0	2.4
	675	-2.0	1.1
Min	Cent	-4.2	-0.0
	668	-4.9	-0.4
	669	-4.9	0.4
	676	-3.5	0.4
	675	-3.5	-0.4

ELEM	MAT	SEC	LC		NODE	Fxx	Fyy	Fxy	Fmax	Fmin	ANGLE
647	1	1	SX	(RS)	Cent	0.8	0.5	0.7	1.3	-0.0	38.60
					669	0.9	0.4	0.7	1.4	-0.1	34.64
					670	0.9	0.6	0.7	1.4	0.1	37.88
					677	0.7	0.6	0.7	1.3	-0.0	43.11
					676	0.7	0.4	0.7	1.2	-0.1	39.61

	NODE	Mxx	Myy	Mxy	Mmax	Mmin	ANGLE
	Cent	4.0	0.6	1.0	4.3	0.3	15.11
	669	4.5	1.0	0.9	4.7	0.8	13.55
	670	4.3	0.7	1.0	4.5	0.4	14.95
	677	3.6	0.6	1.1	4.0	0.2	18.09
	676	3.8	0.4	1.0	4.0	0.1	15.00

	NODE	Vxx	Vyy
	Cent	0.4	0.8
	669	0.4	1.2
	670	0.4	0.3
	677	0.4	0.3
	676	0.4	1.2

LC		NODE	Fxx	Fyy	Fxy	Fmax	Fmin	ANGLE
SY (RS)		Cent	0.2	0.8	1.8	2.3	-1.3	49.53
		669	0.3	0.4	1.8	2.2	-1.4	46.05
		670	0.3	1.2	1.8	2.6	-1.1	51.65
		677	0.2	1.2	1.8	2.5	-1.2	52.51
		676	0.2	0.4	1.8	2.1	-1.5	46.96

	NODE	Mxx	Myy	Mxy	Mmax	Mmin	ANGLE
	Cent	0.4	1.2	0.3	1.3	0.3	68.96
	669	0.7	0.9	0.4	1.2	0.4	52.79
	670	0.4	0.8	0.3	1.0	0.2	59.59
	677	0.2	1.6	0.3	1.6	0.2	76.87
	676	0.4	1.5	0.4	1.6	0.3	72.90

	NODE	Vxx	Vyy
	Cent	0.8	1.6
	669	1.1	1.2
	670	1.1	2.0
	677	0.5	2.0
	676	0.5	1.2

LC		NODE	Fxx	Fyy	Fxy	Fmax	Fmin	ANGLE
RC ENV~1	Max	Cent	0.3	1.4	2.3	3.0	-0.3	55.11
		669	0.4	1.3	2.3	2.8	-0.4	52.86
		670	0.4	1.8	2.3	3.3	-0.4	57.15
		677	0.3	1.8	2.3	3.3	-0.3	56.99
		676	0.3	1.3	2.3	2.8	-0.3	52.68
	Min	Cent	-1.3	-0.1	-1.3	0.2	-1.8	-83.23
		669	-1.5	0.2	-1.3	0.2	-2.0	-84.19
		670	-1.5	-0.5	-1.3	0.1	-2.0	-83.81
		677	-1.1	-0.5	-1.3	0.1	-1.8	-81.81
		676	-1.1	0.2	-1.3	0.2	-1.9	-82.46

	NODE	Mxx	Myy	Mxy	Mmax	Mmin	ANGLE
Max	Cent	10.5	4.0	1.5	10.8	3.7	10.86
	669	9.6	5.0	1.7	10.1	4.5	18.44
	670	11.8	3.9	1.7	12.2	3.5	11.16
	677	10.7	2.9	1.4	10.8	2.8	6.13
	676	9.9	4.5	1.4	10.1	4.4	10.82
Min	Cent	-1.8	-0.7	-0.5	-0.0	-1.9	-75.08
	669	-3.4	-0.1	-0.2	-0.1	-3.4	-86.86
	670	-0.5	0.0	-0.4	0.3	-0.7	-62.44
	677	-0.5	-1.8	-0.8	0.1	-1.8	-41.33
	676	-2.7	-1.3	-0.5	-0.1	-2.8	-78.59

	NODE	Vxx	Vyy
Max	Cent	-2.6	3.6
	669	-3.5	3.3
	670	-3.5	3.8
	677	-1.7	3.8
	676	-1.7	3.3
Min	Cent	-5.1	-0.1
	669	-6.3	0.1
	670	-6.3	-0.3
	677	-4.3	-0.3

		676	-4.3	0.1			

LC		NODE	Fxx	Fyy	Fxy	Fmax	Fmin	ANGLE
RC ENV~2	Max	Cent	-0.3	1.0	0.9	1.3	-0.3	67.90
		669	-0.3	1.0	0.9	1.2	-0.4	68.47
		670	-0.3	1.0	0.9	1.3	-0.4	69.47
		677	-0.2	1.0	0.9	1.4	-0.3	67.32
		676	-0.2	1.0	0.9	1.2	-0.3	66.14
	Min	Cent	-0.9	0.6	0.3	0.7	-1.3	73.41
		669	-1.1	0.5	0.3	0.7	-1.4	74.24
		670	-1.1	0.6	0.3	0.7	-1.4	76.21
		677	-0.8	0.6	0.3	0.7	-1.2	74.46
		676	-0.8	0.5	0.3	0.7	-1.2	72.07

	NODE	Mxx	Myy	Mxy	Mmax	Mmin	ANGLE
Max	Cent	7.1	2.6	1.0	7.3	2.4	11.14
	669	6.3	3.4	1.2	6.7	2.9	19.80
	670	8.2	2.6	1.2	8.4	2.3	11.08
	677	7.4	1.8	0.8	7.4	1.7	6.02
	676	6.5	2.9	0.8	6.6	2.8	11.52
Min	Cent	2.0	0.4	0.3	2.1	0.2	15.53
	669	0.9	0.9	0.5	1.5	0.2	45.39
	670	3.5	0.8	0.5	3.6	0.7	10.96
	677	2.8	-0.4	0.1	2.8	-0.4	5.14
	676	0.8	0.1	0.1	0.9	-0.1	22.58

	NODE	Vxx	Vyy
Max	Cent	-2.4	2.6
	669	-3.1	2.4
	670	-3.1	2.8
	677	-1.7	2.8
	676	-1.7	2.4
Min	Cent	-4.5	0.7
	669	-5.1	0.4
	670	-5.1	1.0
	677	-3.9	1.0
	676	-3.9	0.4

ELEM	MAT	SEC	LC		NODE	Fxx	Fyy	Fxy	Fmax	Fmin	ANGLE
648	1	1	SX (RS)		Cent	0.8	0.7	0.6	1.3	0.1	43.49
					670	1.2	0.6	0.6	1.5	0.2	31.70
					234	1.2	0.9	0.6	1.7	0.4	38.83
					237	0.4	0.9	0.6	1.3	-0.0	56.59
					677	0.4	0.6	0.6	1.1	-0.1	49.16

	NODE	Mxx	Myy	Mxy	Mmax	Mmin	ANGLE
	Cent	3.4	0.9	1.4	4.1	0.3	23.90
	670	4.0	0.7	1.3	4.5	0.2	18.67
	234	4.0	1.4	1.7	4.9	0.6	25.79
	237	2.4	1.1	1.6	3.4	0.0	33.32
	677	3.3	0.5	1.2	3.8	0.1	20.60

	NODE	Vxx	Vyy
	Cent	1.1	0.2
	670	0.2	0.3
	234	0.2	0.3
	237	2.0	0.3
	677	2.0	0.3

LC		NODE	Fxx	Fyy	Fxy	Fmax	Fmin	ANGLE
SY (RS)		Cent	0.4	1.3	1.3	2.2	-0.5	54.89
		670	0.7	1.1	1.3	2.2	-0.4	49.82
		234	0.7	1.5	1.3	2.4	-0.3	53.87
		237	0.1	1.5	1.3	2.3	-0.7	59.27
		677	0.1	1.1	1.3	2.0	-0.8	55.75

	NODE	Mxx	Myy	Mxy	Mmax	Mmin	ANGLE
	Cent	0.4	1.1	0.2	1.1	0.4	77.09

670	0.6	0.8	0.2	1.0	0.4	56.35
234	0.9	0.7	0.1	1.0	0.7	25.41
237	0.2	1.6	0.1	1.6	0.1	84.88
677	0.2	1.6	0.2	1.6	0.2	80.29

NODE	Vxx	Vyy
Cent	0.5	2.0
670	0.6	2.0
234	0.6	2.1
237	0.5	2.1
677	0.5	2.0

LC		NODE	Fxx	Fyy	Fxy	Fmax	Fmin	ANGLE
RC ENV~1	Max	Cent	0.3	2.0	1.7	3.0	-0.3	60.75
		670	0.5	1.8	1.7	2.8	-0.2	58.57
		234	0.5	2.2	1.7	3.2	-0.1	61.44
		237	0.1	2.2	1.7	3.1	-0.3	62.67
		677	0.1	1.8	1.7	2.8	-0.3	59.96
	Min	Cent	-1.4	-0.6	-0.9	0.0	-1.8	-82.25
		670	-2.0	-0.4	-0.9	0.1	-2.4	-58.69
		234	-2.0	-0.7	-0.9	-0.1	-2.3	-84.13
		237	-0.8	-0.7	-0.9	-0.1	-1.4	-73.22
		677	-0.8	-0.4	-0.9	0.2	-1.3	-78.15

	NODE	Mxx	Myy	Mxy	Mmax	Mmin	ANGLE
Max	Cent	12.5	3.2	1.5	12.5	3.1	3.66
	670	12.6	4.0	1.6	12.7	3.8	7.09
	234	14.6	3.9	1.5	14.6	3.9	1.70
	237	11.4	2.1	1.3	11.4	2.0	0.33
	677	11.5	3.1	1.4	11.6	3.0	5.13
Min	Cent	1.7	-0.5	-1.4	2.4	-1.0	-26.63
	670	0.1	0.1	-1.0	1.2	-0.9	-47.43
	234	3.4	0.1	-1.8	4.2	-0.8	-23.72
	237	3.5	-1.5	-1.8	4.1	-1.6	-19.48
	677	0.0	-1.7	-1.0	0.8	-1.7	-36.19

	NODE	Vxx	Vyy
Max	Cent	-1.6	4.0
	670	-2.9	3.8
	234	-2.9	4.3
	237	-0.1	4.3
	677	-0.1	3.8
Min	Cent	-6.2	-0.2
	670	-6.5	-0.3
	234	-6.5	-0.2
	237	-6.4	-0.2
	677	-6.4	-0.3

LC		NODE	Fxx	Fyy	Fxy	Fmax	Fmin	ANGLE
RC ENV~2	Max	Cent	-0.2	1.1	0.8	1.4	-0.3	70.52
		670	-0.3	1.0	0.8	1.3	-0.3	72.42
		234	-0.3	1.2	0.8	1.5	-0.3	73.68
		237	-0.2	1.2	0.8	1.6	-0.2	68.24
		677	-0.2	1.0	0.8	1.4	-0.2	66.16
	Min	Cent	-1.0	0.6	0.2	0.6	-1.3	77.84
		670	-1.4	0.6	0.2	0.7	-1.7	77.27
		234	-1.4	0.5	0.2	0.5	-1.7	77.28
		237	-0.6	0.5	0.2	0.5	-0.9	76.13
		677	-0.6	0.6	0.2	0.7	-0.9	78.36

	NODE	Mxx	Myy	Mxy	Mmax	Mmin	ANGLE
Max	Cent	8.9	2.2	0.6	8.9	2.1	3.16
	670	8.7	2.7	0.9	8.8	2.6	6.75
	234	10.6	2.7	0.5	10.6	2.7	1.12
	237	8.3	1.3	0.3	8.3	1.3	-0.16
	677	7.9	1.9	0.7	8.0	1.9	4.86
Min	Cent	5.0	0.5	-0.2	5.0	0.5	0.24
	670	3.8	0.8	0.2	3.8	0.8	4.66
	234	7.0	1.3	-0.4	7.0	1.3	2.73
	237	5.7	-0.1	-0.6	5.7	-0.1	-2.42
	677	3.1	-0.3	-0.1	3.1	-0.3	2.60

	NODE	Vxx	Vyy
Max	Cent	-1.9	2.9
	670	-2.9	2.8
	234	-2.9	3.1
	237	-0.8	3.1
	677	-0.8	2.8
Min	Cent	-5.3	1.3
	670	-6.1	1.0
	234	-6.1	1.5
	237	-4.5	1.5
	677	-4.5	1.0

ELEM	MAT	SEC	LC	NODE	Fxx	Fyy	Fxy	Fmax	Fmin	ANGLE
649	1	1	SX (RS)	Cent	0.1	0.1	0.8	0.9	-0.7	45.10
				632	0.1	0.0	0.8	0.9	-0.7	43.19
				671	0.1	0.3	0.8	1.0	-0.6	47.61
				678	0.1	0.3	0.8	1.0	-0.6	47.46
				640	0.1	0.0	0.8	0.9	-0.7	43.04

	NODE	Mxx	Myy	Mxy	Mmax	Mmin	ANGLE
	Cent	0.4	0.2	0.8	1.1	-0.6	41.64
	632	0.1	0.0	0.9	1.0	-0.8	43.34
	671	1.0	0.3	0.9	1.6	-0.3	33.69
	678	0.5	0.5	0.8	1.2	-0.3	44.81
	640	0.1	0.0	0.8	0.9	-0.7	42.87

	NODE	Vxx	Vyy
	Cent	1.4	0.2
	632	2.1	0.0
	671	2.1	0.4
	678	0.8	0.4
	640	0.8	0.0

LC	NODE	Fxx	Fyy	Fxy	Fmax	Fmin	ANGLE
SY (RS)	Cent	0.5	0.6	0.5	1.1	0.0	47.66
	632	0.4	0.6	0.5	1.0	-0.0	50.09
	671	0.4	0.6	0.5	1.0	-0.0	50.36
	678	0.7	0.6	0.5	1.2	0.1	43.44
	640	0.7	0.6	0.5	1.2	0.1	43.16

	NODE	Mxx	Myy	Mxy	Mmax	Mmin	ANGLE
	Cent	0.8	2.0	0.2	2.1	0.8	82.82
	632	1.1	1.4	0.1	1.4	1.0	71.70
	671	0.8	1.4	0.2	1.5	0.7	72.02
	678	0.7	2.6	0.2	2.7	0.7	84.18
	640	0.7	2.8	0.1	2.8	0.7	87.81

	NODE	Vxx	Vyy
	Cent	0.2	2.5
	632	0.5	2.7
	671	0.5	2.3
	678	0.2	2.3
	640	0.2	2.7

LC		NODE	Fxx	Fyy	Fxy	Fmax	Fmin	ANGLE
RC ENV~1	Max	Cent	0.0	1.9	0.8	1.9	-0.1	89.74
		632	-0.1	2.0	0.8	2.0	-0.3	89.76
		671	-0.1	1.8	0.8	1.8	-0.3	-88.95
		678	0.3	1.8	0.8	1.8	0.1	-88.82
		640	0.3	2.0	0.8	2.0	0.1	89.73
	Min	Cent	-1.3	0.2	-0.8	0.4	-1.3	-68.61
		632	-1.5	0.2	-0.8	0.4	-1.5	-68.57
		671	-1.5	0.2	-0.8	0.4	-1.5	-67.75
		678	-1.1	0.2	-0.8	0.4	-1.3	-69.41
		640	-1.1	0.2	-0.8	0.4	-1.3	-70.14

	NODE	Mxx	Myy	Mxy	Mmax	Mmin	ANGLE

Max	Cent	2.7	-2.3	1.4	3.5	-2.7	-17.79
	632	0.3	-3.8	1.2	1.4	-3.9	-22.60
	671	5.7	-1.0	1.1	6.6	-1.9	-18.72
	678	5.2	-1.0	1.5	5.6	-1.7	-13.53
	640	-0.2	-2.3	1.6	0.3	-3.1	-16.68
Min	Cent	-2.8	-6.4	-2.3	-2.8	-6.4	5.95
	632	-3.8	-6.5	-2.7	-3.8	-6.8	4.25
	671	-2.2	-4.9	-2.8	-2.0	-4.9	-18.64
	678	-2.2	-6.3	-2.0	-2.1	-6.4	7.56
	640	-3.4	-7.9	-1.8	-3.3	-8.0	8.95

	NODE	Vxx	Vyy
Max	Cent	-0.6	2.6
	632	-0.1	2.6
	671	-0.1	2.6
	678	-1.1	2.6
	640	-1.1	2.6
Min	Cent	-8.8	-2.4
	632	-8.9	-2.8
	671	-8.9	-2.1
	678	-8.7	-2.1
	640	-8.7	-2.8

LC		NODE	Fxx	Fyy	Fxy	Fmax	Fmin	ANGLE
RC ENV~2	Max	Cent	-0.2	1.4	0.0	1.4	-0.2	89.78
		632	-0.3	1.5	0.0	1.5	-0.3	89.80
		671	-0.3	1.3	0.0	1.3	-0.3	-89.01
		678	-0.2	1.3	0.0	1.3	-0.2	-88.90
		640	-0.2	1.5	0.0	1.5	-0.2	89.77
	Min	Cent	-0.9	0.8	-0.1	0.8	-0.9	-87.20
		632	-1.1	0.7	-0.1	0.7	-1.1	-87.31
		671	-1.1	0.8	-0.1	0.8	-1.1	88.84
		678	-0.8	0.8	-0.1	0.8	-0.8	88.68
		640	-0.8	0.7	-0.1	0.7	-0.8	-86.98

	NODE	Mxx	Myy	Mxy	Mmax	Mmin	ANGLE
Max	Cent	1.4	-2.5	0.6	1.8	-2.9	-15.50
	632	-0.2	-3.7	0.3	0.3	-4.4	-20.19
	671	3.4	-1.2	0.3	3.9	-1.8	-17.12
	678	3.0	-1.5	0.8	3.3	-1.6	-11.35
	640	-0.6	-3.8	0.8	-0.4	-4.0	-13.42
Min	Cent	-2.1	-4.6	-1.4	-1.9	-4.6	13.26
	632	-2.8	-5.3	-1.6	-2.7	-5.3	7.80
	671	-1.3	-3.6	-1.7	-1.2	-3.6	7.17
	678	-1.5	-3.9	-1.1	-1.2	-4.1	18.03
	640	-2.8	-5.7	-1.0	-2.5	-5.8	16.71

	NODE	Vxx	Vyy
Max	Cent	-1.9	1.2
	632	-2.0	1.1
	671	-2.0	1.3
	678	-1.8	1.3
	640	-1.8	1.1
Min	Cent	-5.9	0.1
	632	-6.0	-0.1
	671	-6.0	0.2
	678	-5.9	0.2
	640	-5.9	-0.1

ELEM	MAT	SEC	LC		NODE	Fxx	Fyy	Fxy	Fmax	Fmin	ANGLE
650	1	1	SX	(RS)	Cent	0.3	0.3	0.8	1.1	-0.5	45.51
					671	0.4	0.3	0.8	1.1	-0.5	43.42
					672	0.4	0.3	0.8	1.1	-0.4	44.49
					679	0.2	0.3	0.8	1.1	-0.5	47.10
					678	0.2	0.3	0.8	1.0	-0.5	46.02

	NODE	Mxx	Myy	Mxy	Mmax	Mmin	ANGLE
	Cent	1.0	0.4	0.5	1.3	0.1	29.95
	671	1.2	0.3	0.6	1.5	-0.0	27.61
	672	1.5	0.5	0.5	1.7	0.3	20.43

```
                    679        0.9        0.6        0.4        1.3        0.3       35.65
                    678        0.7        0.5        0.6        1.2       -0.1       40.00

                   NODE        Vxx        Vyy
             ---- ------ ---------- ----------
                   Cent        0.9        0.5
                    671        0.9        0.4
                    672        0.9        0.5
                    679        0.8        0.5
                    678        0.8        0.4


        LC         NODE        Fxx        Fyy        Fxy       Fmax       Fmin      ANGLE
-------- ---- ------ ---------- ---------- ---------- ---------- ---------- ----------
      SY (RS)   Cent        0.5        0.6        1.3        1.8       -0.8       46.27
                    671        0.4        0.6        1.3        1.8       -0.8       47.50
                    672        0.4        0.6        1.3        1.8       -0.8       47.28
                    679        0.6        0.6        1.3        1.9       -0.7       44.96
                    678        0.6        0.6        1.3        1.9       -0.7       45.18

                   NODE        Mxx        Myy        Mxy       Mmax       Mmin      ANGLE
             ---- ------ ---------- ---------- ---------- ---------- ---------- ----------
                   Cent        0.7        2.0        0.3        2.0        0.6       78.05
                    671        0.8        1.4        0.3        1.5        0.7       67.07
                    672        0.6        1.5        0.3        1.6        0.5       74.12
                    679        0.7        2.3        0.3        2.4        0.7       81.09
                    678        0.7        2.7        0.2        2.7        0.6       83.02

                   NODE        Vxx        Vyy
             ---- ------ ---------- ----------
                   Cent        0.4        2.0
                    671        0.9        2.3
                    672        0.9        1.6
                    679        0.2        1.6
                    678        0.2        2.3


        LC         NODE        Fxx        Fyy        Fxy       Fmax       Fmin      ANGLE
-------- ---- ------ ---------- ---------- ---------- ---------- ---------- ----------
RC ENV~1  Max   Cent        0.1        1.7        1.3        2.1       -0.3       57.81
                    671       -0.1        1.9        1.3        2.1       -0.4       59.99
                    672       -0.1        1.6        1.3        2.0       -0.4       58.83
                    679        0.2        1.6        1.3        2.1       -0.2       55.39
                    678        0.2        1.9        1.3        2.2       -0.2       56.70
           Min   Cent       -1.1        0.1       -1.3        0.8       -1.7      -63.04
                    671       -1.3        0.2       -1.3        0.8       -1.7      -65.95
                    672       -1.3        0.1       -1.3        0.7       -1.7      -63.99
                    679       -0.9        0.1       -1.3        0.8       -1.8      -60.00
                    678       -0.9        0.2       -1.3        0.9       -1.7      -62.38

                   NODE        Mxx        Myy        Mxy       Mmax       Mmin      ANGLE
             ---- ------ ---------- ---------- ---------- ---------- ---------- ----------
           Max   Cent        5.1        0.1        0.9        6.0       -0.6      -20.44
                    671        4.0       -1.3        0.7        5.3       -2.4      -22.80
                    672        6.4        1.9        0.5        7.8        0.8      -25.21
                    679        6.4        1.6        1.1        7.0        1.2      -17.14
                    678        3.6       -1.2        1.4        4.2       -2.0      -15.63
           Min   Cent       -3.0       -4.8       -2.5       -2.9       -4.8      -19.51
                    671       -3.3       -5.1       -3.0       -3.0       -5.1      -29.75
                    672       -3.0       -3.4       -3.1       -2.1       -3.4      -65.46
                    679       -2.7       -4.4       -2.0       -2.5       -4.5       39.54
                    678       -3.0       -6.5       -1.9       -3.0       -6.6        6.74

                   NODE        Vxx        Vyy
             ---- ------ ---------- ----------
           Max   Cent        0.4        2.3
                    671        0.4        2.6
                    672        0.4        2.1
                    679        0.4        2.1
                    678        0.4        2.6
           Min   Cent       -4.4       -1.6
                    671       -4.2       -2.1
                    672       -4.2       -1.2
                    679       -4.5       -1.2
                    678       -4.5       -2.1


        LC         NODE        Fxx        Fyy        Fxy       Fmax       Fmin      ANGLE
-------- ---- ------ ---------- ---------- ---------- ---------- ---------- ----------
```

RC ENV~2	Max	Cent	-0.2	1.2	0.1	1.2	-0.2	89.87
		671	-0.3	1.3	0.1	1.3	-0.3	88.79
		672	-0.3	1.1	0.1	1.1	-0.3	89.87
		679	-0.2	1.1	0.1	1.1	-0.2	89.85
		678	-0.2	1.3	0.1	1.3	-0.2	88.58
	Min	Cent	-0.8	0.7	-0.0	0.7	-0.8	87.79
		671	-1.0	0.8	-0.0	0.8	-1.0	-89.07
		672	-1.0	0.6	-0.0	0.6	-1.0	87.25
		679	-0.6	0.6	-0.0	0.6	-0.6	86.64
		678	-0.6	0.8	-0.0	0.8	-0.6	-88.91

	NODE	Mxx	Myy	Mxy	Mmax	Mmin	ANGLE
Max	Cent	2.9	-0.4	0.4	3.4	-0.8	-19.11
	671	2.2	-1.5	0.1	2.9	-2.2	-21.58
	672	3.8	0.9	0.1	4.7	0.2	-24.87
	679	3.7	0.6	0.7	4.0	0.4	-15.55
	678	1.9	-1.7	0.8	2.2	-1.9	-13.39
Min	Cent	-2.0	-3.1	-1.5	-1.8	-3.1	18.41
	671	-2.2	-3.8	-1.9	-2.2	-3.8	5.81
	672	-1.5	-2.0	-1.9	-1.5	-2.0	14.61
	679	-1.7	-2.3	-1.1	-1.3	-2.7	29.57
	678	-2.4	-4.1	-1.1	-2.0	-4.3	21.51

	NODE	Vxx	Vyy
Max	Cent	-0.3	1.3
	671	-0.3	1.3
	672	-0.3	1.3
	679	-0.3	1.3
	678	-0.3	1.3
Min	Cent	-2.9	0.3
	671	-2.8	0.2
	672	-2.8	0.4
	679	-2.9	0.4
	678	-2.9	0.2

ELEM	MAT	SEC	LC		NODE	Fxx	Fyy	Fxy	Fmax	Fmin	ANGLE
651	1	1	SX (RS)		Cent	0.4	0.3	0.7	1.1	-0.4	42.22
					672	0.5	0.3	0.7	1.2	-0.3	41.04
					673	0.5	0.3	0.7	1.2	-0.4	40.11
					680	0.4	0.3	0.7	1.1	-0.4	42.90
					679	0.4	0.3	0.7	1.1	-0.4	43.85

	NODE	Mxx	Myy	Mxy	Mmax	Mmin	ANGLE
	Cent	1.4	0.5	0.3	1.5	0.4	18.08
	672	1.5	0.5	0.4	1.6	0.4	17.68
	673	1.7	0.5	0.4	1.8	0.4	15.09
	680	1.4	0.5	0.3	1.5	0.5	16.50
	679	1.0	0.6	0.3	1.2	0.5	30.87

	NODE	Vxx	Vyy
	Cent	1.4	0.6
	672	1.4	0.5
	673	1.4	0.7
	680	1.3	0.7
	679	1.3	0.5

LC		NODE	Fxx	Fyy	Fxy	Fmax	Fmin	ANGLE
SY (RS)		Cent	0.4	0.5	1.5	2.0	-1.0	45.90
		672	0.4	0.6	1.5	2.0	-1.0	46.42
		673	0.4	0.5	1.5	1.9	-1.0	45.62
		680	0.5	0.5	1.5	2.0	-1.0	44.74
		679	0.5	0.6	1.5	2.0	-1.0	45.53

	NODE	Mxx	Myy	Mxy	Mmax	Mmin	ANGLE
	Cent	0.6	1.9	0.2	1.9	0.6	80.50
	672	0.5	1.5	0.2	1.6	0.5	77.74
	673	0.6	1.6	0.2	1.7	0.5	77.67
	680	0.7	2.1	0.3	2.1	0.6	79.57
	679	0.6	2.3	0.2	2.4	0.6	82.69

	NODE	Vxx	Vyy
	Cent	0.3	1.3
	672	0.5	1.6
	673	0.5	1.0
	680	0.2	1.0
	679	0.2	1.6

LC		NODE	Fxx	Fyy	Fxy	Fmax	Fmin	ANGLE
RC ENV~1	Max	Cent	0.1	1.4	1.6	2.3	-0.3	54.26
		672	0.1	1.6	1.6	2.3	-0.4	55.94
		673	0.1	1.3	1.6	2.2	-0.4	54.45
		680	0.3	1.3	1.6	2.3	-0.1	51.94
		679	0.3	1.6	1.6	2.4	-0.1	53.51
	Min	Cent	-0.9	0.1	-1.4	0.6	-1.8	-65.39
		672	-1.2	0.1	-1.4	0.6	-1.9	-67.95
		673	-1.2	0.1	-1.4	0.6	-1.9	-67.35
		680	-0.8	0.1	-1.4	0.6	-1.8	-62.74
		679	-0.8	0.1	-1.4	0.7	-1.8	-63.54

	NODE	Mxx	Myy	Mxy	Mmax	Mmin	ANGLE
Max	Cent	5.3	2.5	0.6	6.4	1.7	-27.39
	672	4.7	1.6	0.4	6.3	0.4	-28.45
	673	5.7	3.7	0.4	7.2	2.6	-34.70
	680	6.2	3.5	0.8	6.6	3.0	-21.54
	679	4.8	1.3	0.9	5.6	0.8	-20.68
Min	Cent	-3.8	-3.4	-2.4	-3.0	-3.8	7.93
	672	-3.9	-3.6	-2.9	-2.9	-4.0	-15.91
	673	-4.0	-2.3	-2.7	-2.2	-4.0	-69.75
	680	-3.9	-3.1	-1.8	-2.9	-3.9	47.46
	679	-3.6	-4.6	-2.0	-3.2	-4.7	12.83

	NODE	Vxx	Vyy
Max	Cent	1.5	1.8
	672	1.5	2.1
	673	1.5	1.7
	680	1.5	1.7
	679	1.5	2.1
Min	Cent	-1.9	-0.8
	672	-1.7	-1.2
	673	-1.7	-0.4
	680	-2.0	-0.4
	679	-2.0	-1.2

LC		NODE	Fxx	Fyy	Fxy	Fmax	Fmin	ANGLE
RC ENV~2	Max	Cent	-0.2	1.0	0.2	1.0	-0.2	85.33
		672	-0.3	1.1	0.2	1.1	-0.4	86.01
		673	-0.3	0.9	0.2	0.9	-0.4	85.56
		680	-0.1	0.9	0.2	0.9	-0.1	84.38
		679	-0.1	1.1	0.2	1.2	-0.1	83.56
	Min	Cent	-0.7	0.6	0.1	0.6	-0.7	82.02
		672	-0.8	0.7	0.1	0.7	-0.9	85.69
		673	-0.8	0.5	0.1	0.5	-0.9	82.59
		680	-0.5	0.5	0.1	0.6	-0.5	79.77
		679	-0.5	0.7	0.1	0.7	-0.5	84.49

	NODE	Mxx	Myy	Mxy	Mmax	Mmin	ANGLE
Max	Cent	2.9	1.3	0.3	3.6	0.8	-28.10
	672	2.6	0.7	0.1	3.6	-0.1	-28.79
	673	3.2	2.2	0.0	4.2	1.4	-36.93
	680	3.5	2.0	0.5	3.7	1.8	-21.99
	679	2.6	0.4	0.6	3.0	0.2	-19.81
Min	Cent	-2.5	-1.7	-1.5	-1.6	-2.5	79.62
	672	-2.5	-2.2	-1.8	-2.1	-2.5	-70.29
	673	-2.3	-0.8	-1.7	-0.8	-2.3	-84.86
	680	-2.5	-1.2	-1.1	-1.1	-2.6	75.00
	679	-2.6	-2.5	-1.2	-2.1	-3.1	46.68

	NODE	Vxx	Vyy
Max	Cent	0.6	1.3
	672	0.8	1.3

		673	0.8	1.2	
		680	0.5	1.2	
		679	0.5	1.3	
	Min	Cent	-1.2	0.5	
		672	-1.1	0.4	
		673	-1.1	0.5	
		680	-1.3	0.5	
		679	-1.3	0.4	

ELEM	MAT	SEC	LC		NODE	Fxx	Fyy	Fxy	Fmax	Fmin	ANGLE
652	1	1	SX	(RS)	Cent	0.6	0.2	0.7	1.2	-0.4	38.41
					673	0.7	0.3	0.7	1.3	-0.3	36.50
					674	0.7	0.2	0.7	1.2	-0.3	35.04
					681	0.5	0.2	0.7	1.1	-0.4	39.56
					680	0.5	0.3	0.7	1.1	-0.4	41.14

	NODE	Mxx	Myy	Mxy	Mmax	Mmin	ANGLE
	Cent	1.9	0.4	0.4	2.1	0.3	15.48
	673	1.7	0.5	0.5	1.9	0.3	18.00
	674	2.3	0.5	0.5	2.5	0.3	14.85
	681	2.3	0.4	0.4	2.4	0.3	12.90
	680	1.5	0.6	0.4	1.6	0.5	18.22

	NODE	Vxx	Vyy
	Cent	1.7	0.6
	673	1.7	0.7
	674	1.7	0.6
	681	1.6	0.6
	680	1.6	0.7

LC		NODE	Fxx	Fyy	Fxy	Fmax	Fmin	ANGLE
SY	(RS)	Cent	0.4	0.4	1.4	1.8	-1.0	45.19
		673	0.5	0.5	1.4	1.9	-1.0	45.11
		674	0.5	0.3	1.4	1.8	-1.0	43.72
		681	0.4	0.3	1.4	1.8	-1.0	43.91
		680	0.4	0.5	1.4	1.9	-1.0	45.30

	NODE	Mxx	Myy	Mxy	Mmax	Mmin	ANGLE
	Cent	0.6	1.8	0.4	1.9	0.5	74.20
	673	0.6	1.6	0.3	1.7	0.5	74.21
	674	0.6	1.6	0.4	1.8	0.5	70.92
	681	0.6	2.0	0.4	2.1	0.5	73.23
	680	0.6	2.1	0.4	2.2	0.5	77.02

	NODE	Vxx	Vyy
	Cent	0.2	0.8
	673	0.2	1.0
	674	0.2	0.7
	681	0.2	0.7
	680	0.2	1.0

LC		NODE	Fxx	Fyy	Fxy	Fmax	Fmin	ANGLE
RC ENV~1	Max	Cent	0.3	1.2	1.6	2.2	-0.2	52.43
		673	0.3	1.3	1.6	2.3	-0.4	53.60
		674	0.3	1.1	1.6	2.1	-0.4	52.06
		681	0.3	1.1	1.6	2.2	-0.0	50.10
		680	0.3	1.3	1.6	2.3	-0.0	51.69
	Min	Cent	-0.9	0.2	-1.2	0.5	-1.5	-69.76
		673	-1.2	0.1	-1.2	0.5	-1.7	-72.47
		674	-1.2	0.2	-1.2	0.5	-1.7	-72.75
		681	-0.7	0.2	-1.2	0.5	-1.5	-66.93
		680	-0.7	0.1	-1.2	0.5	-1.5	-66.48

	NODE	Mxx	Myy	Mxy	Mmax	Mmin	ANGLE
	Max	Cent	5.7	4.0	0.6	6.3	3.4	-26.57
		673	4.9	3.6	0.5	6.0	2.6	-37.52
		674	6.0	4.6	0.6	6.7	3.9	-29.57
		681	6.6	4.4	0.7	6.9	4.1	-19.02

680	5.4	3.3	0.7	5.9	2.8	-24.06
Min Cent	-4.6	-2.4	-1.9	-2.4	-4.6	-78.43
673	-4.6	-2.4	-2.2	-2.4	-4.6	-77.71
674	-4.7	-1.7	-1.9	-1.6	-4.7	-75.88
681	-4.7	-2.3	-1.5	-2.3	-4.7	-79.72
680	-4.5	-3.2	-1.8	-3.2	-4.5	-85.62

	NODE	Vxx	Vyy
Max	Cent	0.9	1.6
	673	1.0	1.7
	674	1.0	1.5
	681	0.9	1.5
	680	0.9	1.7
Min	Cent	-2.4	-0.3
	673	-2.4	-0.4
	674	-2.4	-0.1
	681	-2.4	-0.1
	680	-2.4	-0.4

LC		NODE	Fxx	Fyy	Fxy	Fmax	Fmin	ANGLE
RC ENV~2	Max	Cent	-0.1	0.9	0.4	1.0	-0.2	75.71
		673	-0.3	0.9	0.4	1.0	-0.3	77.92
		674	-0.3	0.8	0.4	0.9	-0.3	77.17
		681	0.0	0.8	0.4	1.0	-0.1	72.63
		680	0.0	0.9	0.4	1.1	-0.0	73.90
	Min	Cent	-0.6	0.5	0.2	0.6	-0.7	76.14
		673	-0.8	0.5	0.2	0.6	-0.9	78.47
		674	-0.8	0.5	0.2	0.5	-0.9	77.55
		681	-0.4	0.5	0.2	0.5	-0.5	75.40
		680	-0.4	0.5	0.2	0.6	-0.5	76.66

	NODE	Mxx	Myy	Mxy	Mmax	Mmin	ANGLE
Max	Cent	3.1	2.4	0.2	3.6	2.0	-30.98
	673	2.6	2.1	0.1	3.4	1.4	-41.21
	674	3.4	2.9	0.1	3.9	2.4	-35.61
	681	3.7	2.7	0.3	3.9	2.5	-21.49
	680	2.9	1.9	0.4	3.2	1.6	-26.91
Min	Cent	-2.8	-0.7	-1.2	-0.7	-2.8	88.00
	673	-3.0	-0.9	-1.4	-0.9	-3.0	-88.72
	674	-2.6	-0.1	-1.2	-0.1	-2.6	-88.34
	681	-2.7	-0.5	-0.9	-0.5	-2.7	84.83
	680	-3.1	-1.3	-1.1	-1.3	-3.2	83.28

	NODE	Vxx	Vyy
Max	Cent	-0.1	1.1
	673	0.0	1.2
	674	0.0	1.1
	681	-0.2	1.1
	680	-0.2	1.2
Min	Cent	-1.4	0.5
	673	-1.3	0.5
	674	-1.3	0.5
	681	-1.4	0.5
	680	-1.4	0.5

ELEM	MAT	SEC	LC		NODE	Fxx	Fyy	Fxy	Fmax	Fmin	ANGLE
653	1	1	SX (RS)		Cent	0.7	0.2	0.8	1.2	-0.3	36.75
					674	0.8	0.2	0.8	1.3	-0.3	33.86
					675	0.8	0.3	0.8	1.3	-0.3	35.08
					682	0.6	0.3	0.8	1.2	-0.3	39.10
					681	0.6	0.2	0.8	1.2	-0.4	37.77

	NODE	Mxx	Myy	Mxy	Mmax	Mmin	ANGLE
	Cent	2.8	0.4	0.6	2.9	0.3	13.74
	674	2.4	0.5	0.6	2.6	0.3	15.88
	675	3.2	0.4	0.7	3.4	0.3	13.39
	682	3.1	0.4	0.6	3.3	0.2	12.30
	681	2.4	0.5	0.5	2.5	0.3	14.58

	NODE	Vxx	Vyy

	Cent	1.5	0.6	
	674	1.6	0.6	
	675	1.6	0.6	
	682	1.5	0.6	
	681	1.5	0.6	

LC		NODE	Fxx	Fyy	Fxy	Fmax	Fmin	ANGLE
SY (RS)		Cent	0.3	0.3	1.5	1.7	-1.2	44.35
		674	0.4	0.3	1.5	1.8	-1.1	44.04
		675	0.4	0.2	1.5	1.8	-1.1	43.34
		682	0.3	0.2	1.5	1.7	-1.2	44.28
		681	0.3	0.3	1.5	1.8	-1.1	44.98

	NODE	Mxx	Myy	Mxy	Mmax	Mmin	ANGLE
	Cent	0.6	1.8	0.5	2.0	0.4	70.92
	674	0.6	1.6	0.4	1.8	0.5	69.16
	675	0.6	1.6	0.5	1.8	0.4	68.65
	682	0.6	2.0	0.5	2.1	0.4	72.37
	681	0.6	2.0	0.5	2.1	0.4	72.62

	NODE	Vxx	Vyy
	Cent	0.1	0.7
	674	0.1	0.7
	675	0.1	0.8
	682	0.1	0.8
	681	0.1	0.7

LC		NODE	Fxx	Fyy	Fxy	Fmax	Fmin	ANGLE
RC ENV~1	Max	Cent	0.4	1.2	1.8	2.3	-0.2	50.75
		674	0.4	1.2	1.8	2.3	-0.4	51.61
		675	0.4	1.2	1.8	2.3	-0.4	51.12
		682	0.5	1.2	1.8	2.3	-0.0	49.60
		681	0.5	1.2	1.8	2.4	-0.1	50.10
	Min	Cent	-0.9	0.3	-1.1	0.4	-1.5	-74.24
		674	-1.2	0.2	-1.1	0.4	-1.5	-76.95
		675	-1.2	0.3	-1.1	0.4	-1.5	-76.44
		682	-0.7	0.3	-1.1	0.4	-1.4	-70.89
		681	-0.7	0.2	-1.1	0.5	-1.3	-71.83

		NODE	Mxx	Myy	Mxy	Mmax	Mmin	ANGLE
	Max	Cent	6.8	4.5	0.8	7.0	4.3	-13.22
		674	5.8	4.5	0.8	6.1	4.2	-23.62
		675	7.2	4.6	0.8	7.2	4.5	-8.47
		682	7.8	4.4	0.8	7.9	4.3	-7.86
		681	6.5	4.3	0.7	6.7	4.1	-18.12
	Min	Cent	-4.8	-1.9	-1.3	-1.8	-4.8	-68.33
		674	-5.0	-1.7	-1.4	-1.7	-5.0	-78.92
		675	-4.5	-1.4	-1.1	-1.2	-4.6	-64.59
		682	-4.5	-2.1	-1.1	-1.7	-4.6	-40.09
		681	-5.0	-2.4	-1.4	-2.3	-5.1	-71.43

		NODE	Vxx	Vyy
	Max	Cent	-0.6	1.5
		674	-0.5	1.5
		675	-0.5	1.6
		682	-0.6	1.6
		681	-0.6	1.5
	Min	Cent	-3.6	-0.1
		674	-3.7	-0.1
		675	-3.7	-0.2
		682	-3.6	-0.2
		681	-3.6	-0.1

LC		NODE	Fxx	Fyy	Fxy	Fmax	Fmin	ANGLE
RC ENV~2	Max	Cent	-0.0	0.9	0.6	1.1	-0.2	68.04
		674	-0.2	0.9	0.6	1.1	-0.3	70.82
		675	-0.2	0.9	0.6	1.1	-0.3	70.82
		682	0.1	0.9	0.6	1.1	-0.1	64.56
		681	0.1	0.9	0.6	1.1	-0.1	64.55

Min	Cent	-0.6	0.4	0.3	0.6	-0.8	70.42
	674	-0.9	0.5	0.3	0.6	-1.1	73.00
	675	-0.9	0.4	0.3	0.5	-1.1	72.39
	682	-0.3	0.4	0.3	0.6	-0.6	67.12
	681	-0.3	0.5	0.3	0.6	-0.6	68.05

	NODE	Mxx	Myy	Mxy	Mmax	Mmin	ANGLE
Max	Cent	4.0	2.8	0.2	4.1	2.7	-14.83
	674	3.2	2.8	0.2	3.5	2.6	-32.31
	675	4.3	2.9	0.2	4.4	2.9	-8.56
	682	4.7	2.7	0.2	4.7	2.7	-7.66
	681	3.6	2.7	0.2	3.8	2.5	-21.78
Min	Cent	-2.2	-0.2	-0.8	-0.2	-2.2	88.69
	674	-2.8	-0.2	-0.9	-0.2	-2.8	89.05
	675	-1.6	0.1	-0.7	0.1	-1.6	88.86
	682	-1.7	-0.3	-0.7	-0.3	-1.7	88.02
	681	-2.9	-0.5	-0.9	-0.5	-2.9	88.56

	NODE	Vxx	Vyy
Max	Cent	-1.3	1.1
	674	-1.3	1.1
	675	-1.3	1.1
	682	-1.3	1.1
	681	-1.3	1.1
Min	Cent	-2.4	0.5
	674	-2.4	0.5
	675	-2.4	0.4
	682	-2.3	0.4
	681	-2.3	0.5

ELEM	MAT	SEC	LC		NODE	Fxx	Fyy	Fxy	Fmax	Fmin	ANGLE
654	1	1	SX (RS)		Cent	0.6	0.3	0.7	1.2	-0.3	39.34
					675	0.7	0.3	0.7	1.3	-0.3	36.28
					676	0.7	0.4	0.7	1.3	-0.2	38.34
					683	0.5	0.4	0.7	1.2	-0.3	41.58
					682	0.5	0.3	0.7	1.1	-0.3	39.42

	NODE	Mxx	Myy	Mxy	Mmax	Mmin	ANGLE
	Cent	3.5	0.4	0.8	3.7	0.2	13.94
	675	3.3	0.5	0.8	3.5	0.3	14.27
	676	3.8	0.4	0.9	4.0	0.2	14.03
	683	3.7	0.4	0.9	3.9	0.1	13.95
	682	3.2	0.4	0.8	3.4	0.2	13.95

	NODE	Vxx	Vyy
	Cent	0.9	0.5
	675	1.0	0.6
	676	1.0	0.5
	683	0.8	0.5
	682	0.8	0.6

LC		NODE	Fxx	Fyy	Fxy	Fmax	Fmin	ANGLE
SY (RS)		Cent	0.2	0.3	1.6	1.9	-1.3	45.55
		675	0.3	0.2	1.6	1.9	-1.4	44.57
		676	0.3	0.4	1.6	2.0	-1.3	46.24
		683	0.3	0.4	1.6	2.0	-1.3	46.23
		682	0.3	0.2	1.6	1.9	-1.4	44.56

	NODE	Mxx	Myy	Mxy	Mmax	Mmin	ANGLE
	Cent	0.5	1.8	0.4	1.9	0.4	72.73
	675	0.6	1.6	0.4	1.8	0.4	68.71
	676	0.5	1.5	0.4	1.7	0.3	70.79
	683	0.5	2.1	0.4	2.2	0.4	75.81
	682	0.5	2.0	0.5	2.1	0.4	73.84

	NODE	Vxx	Vyy
	Cent	0.2	0.9
	675	0.3	0.8
	676	0.3	1.1

		683	0.1	1.1			
		682	0.1	0.8			

LC		NODE	Fxx	Fyy	Fxy	Fmax	Fmin	ANGLE
RC ENV~1	Max	Cent	0.3	1.3	2.1	2.6	-0.3	51.13
		675	0.3	1.2	2.1	2.5	-0.4	50.88
		676	0.3	1.3	2.1	2.6	-0.4	52.68
		683	0.4	1.3	2.1	2.7	-0.1	51.16
		682	0.4	1.2	2.1	2.6	-0.2	49.33
	Min	Cent	-0.9	0.3	-1.2	0.3	-1.7	-77.32
		675	-1.1	0.3	-1.2	0.3	-1.8	-79.31
		676	-1.1	0.2	-1.2	0.3	-1.7	-79.12
		683	-0.7	0.2	-1.2	0.3	-1.5	-75.17
		682	-0.7	0.3	-1.2	0.4	-1.7	-75.50

		NODE	Mxx	Myy	Mxy	Mmax	Mmin	ANGLE
	Max	Cent	8.6	4.2	0.9	8.6	4.2	-0.41
		675	7.6	4.7	1.0	7.6	4.7	0.94
		676	9.1	3.9	1.1	9.1	3.9	3.19
		683	9.5	3.8	0.9	9.5	3.7	-1.15
		682	8.2	4.4	0.8	8.2	4.4	-5.38
	Min	Cent	-3.8	-1.8	-0.7	-0.7	-3.9	-16.94
		675	-4.5	-1.4	-0.7	-1.3	-4.6	-66.35
		676	-3.1	-1.4	-0.7	-0.1	-3.3	-76.82
		683	-3.1	-2.3	-0.9	-0.3	-3.4	-73.37
		682	-4.5	-2.1	-1.0	-1.5	-4.7	-35.01

		NODE	Vxx	Vyy
	Max	Cent	-2.1	1.6
		675	-2.2	1.6
		676	-2.2	1.7
		683	-2.0	1.7
		682	-2.0	1.6
	Min	Cent	-4.2	-0.3
		675	-4.4	-0.2
		676	-4.4	-0.5
		683	-4.1	-0.5
		682	-4.1	-0.2

LC		NODE	Fxx	Fyy	Fxy	Fmax	Fmin	ANGLE
RC ENV~2	Max	Cent	-0.0	0.9	0.7	1.3	-0.3	65.33
		675	-0.2	0.9	0.7	1.2	-0.4	67.05
		676	-0.2	1.0	0.7	1.3	-0.4	68.07
		683	0.1	1.0	0.7	1.3	-0.1	63.41
		682	0.1	0.9	0.7	1.3	-0.2	62.05
	Min	Cent	-0.6	0.5	0.4	0.7	-0.9	67.22
		675	-0.8	0.4	0.4	0.6	-1.1	68.43
		676	-0.8	0.5	0.4	0.7	-1.1	69.65
		683	-0.4	0.5	0.4	0.7	-0.7	65.89
		682	-0.4	0.4	0.4	0.6	-0.7	64.29

		NODE	Mxx	Myy	Mxy	Mmax	Mmin	ANGLE
	Max	Cent	5.4	2.6	0.3	5.4	2.6	0.24
		675	4.6	3.0	0.3	4.6	3.0	2.81
		676	5.9	2.5	0.4	5.9	2.5	3.82
		683	6.1	2.4	0.2	6.1	2.3	-0.90
		682	5.0	2.8	0.1	5.0	2.8	-5.36
	Min	Cent	-0.6	-0.1	-0.5	-0.1	-0.6	88.00
		675	-1.4	0.1	-0.4	0.1	-1.5	85.74
		676	0.4	0.0	-0.3	0.4	-0.0	12.67
		683	0.3	-0.4	-0.6	0.3	-0.4	-8.19
		682	-1.6	-0.2	-0.7	-0.2	-1.6	-87.52

		NODE	Vxx	Vyy
	Max	Cent	-1.9	1.1
		675	-2.0	1.1
		676	-2.0	1.1
		683	-1.9	1.1
		682	-1.9	1.1
	Min	Cent	-3.5	0.4
		675	-3.5	0.4

					676	-3.5	0.4				
					683	-3.4	0.4				
					682	-3.4	0.4				

ELEM	MAT	SEC	LC		NODE	Fxx	Fyy	Fxy	Fmax	Fmin	ANGLE
655	1	1	SX	(RS)	Cent	0.5	0.4	0.7	1.1	-0.2	42.13
					676	0.7	0.4	0.7	1.2	-0.2	38.65
					677	0.7	0.5	0.7	1.2	-0.1	40.97
					684	0.5	0.5	0.7	1.1	-0.2	44.35
					683	0.5	0.4	0.7	1.1	-0.2	41.96

		NODE	Mxx	Myy	Mxy	Mmax	Mmin	ANGLE
		Cent	3.6	0.5	1.1	4.0	0.1	17.52
		676	3.8	0.4	1.0	4.1	0.1	15.48
		677	3.7	0.7	1.2	4.1	0.3	18.98
		684	3.5	0.5	1.2	3.9	0.1	19.58
		683	3.6	0.4	1.1	3.9	0.0	16.39

		NODE	Vxx	Vyy
		Cent	0.4	0.4
		676	0.4	0.5
		677	0.4	0.4
		684	0.4	0.4
		683	0.4	0.5

LC		NODE	Fxx	Fyy	Fxy	Fmax	Fmin	ANGLE
SY	(RS)	Cent	0.2	0.6	1.6	1.9	-1.2	48.59
		676	0.2	0.4	1.6	1.9	-1.3	47.38
		677	0.2	0.7	1.6	2.0	-1.2	49.91
		684	0.3	0.7	1.6	2.1	-1.1	48.75
		683	0.3	0.4	1.6	1.9	-1.2	46.20

		NODE	Mxx	Myy	Mxy	Mmax	Mmin	ANGLE
		Cent	0.4	1.8	0.3	1.9	0.3	77.47
		676	0.4	1.5	0.4	1.6	0.3	72.63
		677	0.3	1.4	0.3	1.5	0.2	76.47
		684	0.5	2.2	0.3	2.3	0.4	80.57
		683	0.4	2.1	0.4	2.1	0.3	77.88

		NODE	Vxx	Vyy
		Cent	0.3	1.3
		676	0.5	1.1
		677	0.5	1.5
		684	0.1	1.5
		683	0.1	1.1

LC		NODE	Fxx	Fyy	Fxy	Fmax	Fmin	ANGLE
RC ENV~1	Max	Cent	0.3	1.4	2.0	2.7	-0.3	54.17
		676	0.3	1.3	2.0	2.5	-0.4	53.62
		677	0.3	1.5	2.0	2.8	-0.4	56.21
		684	0.3	1.5	2.0	2.9	-0.1	53.98
		683	0.3	1.3	2.0	2.7	-0.2	51.26
	Min	Cent	-0.8	0.1	-1.1	0.3	-1.6	-80.26
		676	-1.1	0.2	-1.1	0.3	-1.7	-81.76
		677	-1.1	0.1	-1.1	0.3	-1.6	-81.90
		684	-0.6	0.1	-1.1	0.3	-1.4	-78.84
		683	-0.6	0.2	-1.1	0.3	-1.5	-78.58

		NODE	Mxx	Myy	Mxy	Mmax	Mmin	ANGLE
	Max	Cent	10.3	3.4	1.1	10.3	3.4	0.66
		676	9.9	4.1	1.2	9.9	4.1	4.97
		677	10.8	3.0	1.3	10.8	3.0	2.61
		684	10.7	2.8	1.1	10.7	2.7	-1.01
		683	10.2	3.9	1.0	10.2	3.8	0.24
	Min	Cent	-1.7	-1.8	-1.1	0.1	-2.3	-59.44
		676	-2.8	-1.3	-0.8	0.0	-3.0	-73.35
		677	-0.6	-1.3	-1.1	0.5	-1.6	-44.32
		684	-0.6	-2.5	-1.3	0.6	-2.5	-43.22

683	-2.8	-2.2	-1.1	-0.0	-3.2	-68.39

	NODE	Vxx	Vyy
Max	Cent	-1.5	1.9
	676	-1.7	1.7
	677	-1.7	2.1
	684	-1.4	2.1
	683	-1.4	1.7
Min	Cent	-4.1	-0.8
	676	-4.3	-0.5
	677	-4.3	-1.0
	684	-4.1	-1.0
	683	-4.1	-0.5

LC		NODE	Fxx	Fyy	Fxy	Fmax	Fmin	ANGLE
RC ENV~2	Max	Cent	-0.0	1.0	0.8	1.4	-0.3	66.47
		676	-0.2	1.0	0.8	1.3	-0.4	67.90
		677	-0.2	1.1	0.8	1.4	-0.4	69.18
		684	0.1	1.1	0.8	1.5	-0.2	64.90
		683	0.1	1.0	0.8	1.4	-0.2	63.20
	Min	Cent	-0.6	0.6	0.4	0.8	-0.9	69.36
		676	-0.8	0.5	0.4	0.7	-1.1	69.67
		677	-0.8	0.7	0.4	0.8	-1.0	71.17
		684	-0.4	0.7	0.4	0.9	-0.7	67.38
		683	-0.4	0.5	0.4	0.7	-0.7	65.85

	NODE	Mxx	Myy	Mxy	Mmax	Mmin	ANGLE
Max	Cent	6.9	2.1	0.3	6.9	2.1	0.68
	676	6.4	2.6	0.5	6.5	2.6	5.32
	677	7.4	1.9	0.5	7.4	1.9	2.53
	684	7.3	1.7	0.2	7.3	1.7	-1.10
	683	6.6	2.4	0.2	6.6	2.4	0.26
Min	Cent	1.7	-0.2	-0.5	1.7	-0.2	-0.89
	676	0.8	0.1	-0.2	0.8	0.1	5.12
	677	2.9	-0.0	-0.3	2.9	-0.0	0.93
	684	2.6	-0.4	-0.7	2.7	-0.4	-3.30
	683	0.6	-0.3	-0.6	0.6	-0.3	-10.82

	NODE	Vxx	Vyy
Max	Cent	-1.6	1.2
	676	-1.7	1.1
	677	-1.7	1.2
	684	-1.5	1.2
	683	-1.5	1.1
Min	Cent	-3.8	0.3
	676	-3.9	0.4
	677	-3.9	0.3
	684	-3.8	0.3
	683	-3.8	0.4

ELEM	MAT	SEC	LC		NODE	Fxx	Fyy	Fxy	Fmax	Fmin	ANGLE
656	1	1	SX (RS)		Cent	0.3	0.6	0.5	1.0	-0.1	52.23
					677	0.4	0.5	0.5	0.9	-0.1	47.09
					237	0.4	0.7	0.5	1.1	-0.0	54.51
					240	0.3	0.7	0.5	1.1	-0.1	57.09
					684	0.3	0.5	0.5	0.9	-0.2	50.02

	NODE	Mxx	Myy	Mxy	Mmax	Mmin	ANGLE
	Cent	2.8	0.8	1.4	3.5	0.1	26.42
	677	3.4	0.6	1.3	3.9	0.1	21.56
	237	2.4	1.1	1.4	3.3	0.3	32.40
	240	2.4	0.9	1.4	3.2	0.0	31.29
	684	3.2	0.5	1.3	3.8	-0.1	22.42

	NODE	Vxx	Vyy
	Cent	1.8	0.4
	677	2.0	0.4
	237	2.0	0.5
	240	1.7	0.5
	684	1.7	0.4

LC		NODE	Fxx	Fyy	Fxy	Fmax	Fmin	ANGLE
SY (RS)		Cent	0.1	0.8	1.1	1.6	-0.7	54.04
		677	0.3	0.7	1.1	1.6	-0.7	50.37
		237	0.3	0.9	1.1	1.8	-0.6	53.36
		240	0.3	0.9	1.1	1.8	-0.5	52.36
		684	0.3	0.7	1.1	1.7	-0.6	49.32

		NODE	Mxx	Myy	Mxy	Mmax	Mmin	ANGLE
		Cent	0.2	1.8	0.2	1.8	0.2	83.32
		677	0.2	1.4	0.2	1.5	0.2	80.20
		237	0.2	1.4	0.2	1.4	0.2	81.97
		240	0.4	2.3	0.2	2.3	0.4	84.20
		684	0.4	2.2	0.2	2.2	0.3	83.22

		NODE	Vxx	Vyy
		Cent	0.2	1.7
		677	0.5	1.5
		237	0.5	1.8
		240	0.1	1.8
		684	0.1	1.5

LC		NODE	Fxx	Fyy	Fxy	Fmax	Fmin	ANGLE
RC ENV~1	Max	Cent	0.1	1.7	1.5	2.5	-0.3	60.50
		677	0.1	1.5	1.5	2.4	-0.4	58.03
		237	0.1	1.9	1.5	2.7	-0.3	60.69
		240	0.1	1.9	1.5	2.7	-0.3	59.63
		684	0.1	1.5	1.5	2.4	-0.3	56.86
	Min	Cent	-0.6	0.0	-0.8	0.3	-1.0	-78.15
		677	-0.7	0.1	-0.8	0.3	-1.1	-80.12
		237	-0.7	-0.1	-0.8	0.2	-1.1	-78.08
		240	-0.6	-0.1	-0.8	0.2	-1.1	-75.15
		684	-0.6	0.1	-0.8	0.3	-1.1	-78.14

		NODE	Mxx	Myy	Mxy	Mmax	Mmin	ANGLE
	Max	Cent	11.5	2.6	1.2	11.5	2.6	0.47
		677	11.6	3.2	1.2	11.6	3.1	1.48
		237	11.5	2.4	1.3	11.5	2.4	1.37
		240	11.5	2.5	1.2	11.5	2.5	-0.35
		684	11.3	2.9	1.2	11.3	2.9	-0.37
	Min	Cent	1.7	-1.7	-1.5	2.4	-1.7	-25.69
		677	-0.0	-1.3	-1.3	1.1	-1.6	-39.76
		237	3.5	-1.0	-1.5	3.9	-1.2	-17.32
		240	3.5	-2.2	-1.6	4.0	-2.2	-18.80
		684	-0.1	-2.4	-1.5	1.1	-2.4	-39.41

		NODE	Vxx	Vyy
	Max	Cent	-0.2	2.1
		677	-0.1	2.1
		237	-0.1	2.1
		240	-0.3	2.1
		684	-0.3	2.1
	Min	Cent	-6.4	-1.2
		677	-6.4	-1.0
		237	-6.4	-1.5
		240	-6.4	-1.5
		684	-6.4	-1.0

LC		NODE	Fxx	Fyy	Fxy	Fmax	Fmin	ANGLE
RC ENV~2	Max	Cent	-0.1	1.3	0.6	1.4	-0.3	72.84
		677	-0.2	1.1	0.6	1.3	-0.3	71.22
		237	-0.2	1.4	0.6	1.6	-0.3	74.35
		240	-0.1	1.4	0.6	1.6	-0.2	73.35
		684	-0.1	1.1	0.6	1.3	-0.2	69.66
	Min	Cent	-0.5	0.7	0.3	0.8	-0.6	69.74
		677	-0.5	0.7	0.3	0.8	-0.7	72.84
		237	-0.5	0.6	0.3	0.8	-0.7	68.89
		240	-0.4	0.6	0.3	0.8	-0.6	66.89
		684	-0.4	0.7	0.3	0.8	-0.6	71.49

	NODE	Mxx	Myy	Mxy	Mmax	Mmin	ANGLE
Max	Cent	8.1	1.7	0.3	8.1	1.7	0.17
	677	8.0	2.0	0.3	8.0	2.0	1.21
	237	8.3	1.6	0.4	8.3	1.6	0.95
	240	8.3	1.3	0.2	8.3	1.3	-0.62
	684	7.7	1.8	0.2	7.7	1.8	-0.58
Min	Cent	4.4	-0.0	-0.6	4.4	-0.1	-2.45
	677	3.2	0.0	-0.5	3.2	0.0	-1.77
	237	5.7	0.2	-0.5	5.8	0.2	-1.64
	240	5.7	-0.1	-0.8	5.7	-0.2	-2.70
	684	2.9	-0.4	-0.7	2.9	-0.4	-3.69

	NODE	Vxx	Vyy
Max	Cent	-0.9	1.0
	677	-0.8	1.2
	237	-0.8	0.9
	240	-1.0	0.9
	684	-1.0	1.2
Min	Cent	-4.7	0.2
	677	-4.5	0.3
	237	-4.5	0.1
	240	-4.9	0.1
	684	-4.9	0.3

ELEM	MAT	SEC	LC	NODE	Fxx	Fyy	Fxy	Fmax	Fmin	ANGLE
657	1	1	SX (RS)	Cent	0.0	0.1	1.0	1.1	-0.9	46.66
				640	0.1	0.0	1.0	1.1	-0.9	43.30
				678	0.1	0.3	1.0	1.2	-0.8	46.85
				685	0.1	0.3	1.0	1.2	-0.8	47.01
				648	0.1	0.0	1.0	1.1	-0.9	43.46

	NODE	Mxx	Myy	Mxy	Mmax	Mmin	ANGLE
	Cent	0.4	0.2	0.7	1.0	-0.5	41.13
	640	0.1	0.0	0.8	0.9	-0.7	42.97
	678	0.5	0.5	0.7	1.2	-0.2	43.15
	685	0.4	0.4	0.7	1.1	-0.3	45.68
	648	0.8	0.2	0.9	1.4	-0.4	35.09

	NODE	Vxx	Vyy
	Cent	0.7	0.1
	640	0.8	0.0
	678	0.8	0.2
	685	0.9	0.2
	648	0.9	0.0

LC	NODE	Fxx	Fyy	Fxy	Fmax	Fmin	ANGLE
SY (RS)	Cent	0.8	1.6	0.6	1.9	0.5	61.48
	640	0.6	1.7	0.6	2.0	0.4	67.03
	678	0.6	1.4	0.6	1.7	0.3	61.32
	685	1.0	1.4	0.6	1.8	0.6	53.78
	648	1.0	1.7	0.6	2.1	0.7	61.38

	NODE	Mxx	Myy	Mxy	Mmax	Mmin	ANGLE
	Cent	0.7	3.2	0.1	3.2	0.7	86.66
	640	0.7	2.5	0.1	2.5	0.7	87.90
	678	0.7	2.6	0.2	2.6	0.7	83.86
	685	0.8	3.9	0.2	3.9	0.8	85.92
	648	0.8	3.9	0.1	3.9	0.8	88.36

	NODE	Vxx	Vyy
	Cent	0.3	2.4
	640	0.2	2.5
	678	0.2	2.4
	685	0.4	2.4
	648	0.4	2.5

LC	NODE	Fxx	Fyy	Fxy	Fmax	Fmin	ANGLE

LC		NODE	Fxx	Fyy	Fxy	Fmax	Fmin	ANGLE
RC ENV~2	Max	Cent	-0.1	1.4	0.1	1.4	-0.1	-89.40
		640	-0.2	1.6	0.1	1.6	-0.2	-89.45
		678	-0.2	1.3	0.1	1.3	-0.2	-85.47
		685	-0.0	1.3	0.1	1.3	-0.0	-84.87
		648	-0.0	1.6	0.1	1.6	-0.0	-89.40
	Min	Cent	-0.7	0.8	-0.2	0.8	-0.7	-82.05
		640	-0.8	0.8	-0.2	0.8	-0.8	-80.57
		678	-0.8	0.8	-0.2	0.8	-0.8	89.72
		685	-0.6	0.8	-0.2	0.8	-0.6	89.69
		648	-0.6	0.8	-0.2	0.8	-0.6	-78.87

		NODE	Mxx	Myy	Mxy	Mmax	Mmin	ANGLE
	Max	Cent	1.6	-2.2	1.5	1.6	-2.2	-2.08
		640	-0.6	-4.0	1.2	-0.6	-4.0	-7.82
		678	3.0	-1.5	1.4	3.0	-1.5	-3.60
		685	3.3	-0.7	1.8	3.3	-0.8	2.25
		648	0.6	-2.4	1.6	0.6	-2.4	-0.69
	Min	Cent	-1.8	-4.1	-0.2	-1.0	-4.7	27.16
		640	-2.8	-5.8	-0.6	-2.4	-6.0	20.37
		678	-1.5	-3.9	-0.3	-0.8	-4.5	24.79
		685	-1.2	-2.9	0.2	0.0	-4.0	33.27
		648	-1.6	-4.1	-0.1	-0.6	-4.5	28.32

		NODE	Vxx	Vyy
	Max	Cent	-1.0	-2.0
		640	-1.8	-2.7
		678	-1.8	-1.3
		685	-0.2	-1.3
		648	-0.2	-2.7
	Min	Cent	-5.1	-2.5
		640	-5.9	-3.2
		678	-5.9	-1.9
		685	-4.5	-1.9
		648	-4.5	-3.2

ELEM	MAT	SEC	LC		NODE	Fxx	Fyy	Fxy	Fmax	Fmin	ANGLE
658	1	1	SX	(RS)	Cent	0.2	0.3	1.0	1.2	-0.7	45.38
					678	0.2	0.2	1.0	1.2	-0.8	44.91
					679	0.2	0.3	1.0	1.3	-0.7	46.35
					686	0.3	0.3	1.0	1.3	-0.7	45.66
					685	0.3	0.2	1.0	1.2	-0.8	44.22

		NODE	Mxx	Myy	Mxy	Mmax	Mmin	ANGLE
		Cent	0.7	0.4	0.5	1.0	0.1	37.22
		678	0.7	0.4	0.6	1.1	-0.0	38.03
		679	1.0	0.5	0.4	1.2	0.3	30.09
		686	0.6	0.4	0.3	0.9	0.1	37.83
		685	0.6	0.4	0.5	1.0	-0.0	40.02

		NODE	Vxx	Vyy
		Cent	0.8	0.4
		678	0.8	0.2
		679	0.8	0.6
		686	0.8	0.6
		685	0.8	0.2

LC		NODE	Fxx	Fyy	Fxy	Fmax	Fmin	ANGLE
SY	(RS)	Cent	0.7	1.0	1.4	2.3	-0.5	48.00
		678	0.6	1.4	1.4	2.4	-0.5	53.24
		679	0.6	0.7	1.4	2.0	-0.7	46.40
		686	0.9	0.7	1.4	2.2	-0.6	43.13
		685	0.9	1.4	1.4	2.6	-0.3	50.15

		NODE	Mxx	Myy	Mxy	Mmax	Mmin	ANGLE
		Cent	0.8	3.0	0.2	3.0	0.8	85.37
		678	0.6	2.6	0.3	2.7	0.6	82.37
		679	0.7	2.5	0.2	2.6	0.7	84.22
		686	1.1	3.1	0.2	3.1	1.1	83.65
		685	0.8	3.8	0.2	3.9	0.8	86.86

		NODE	Vxx	Vyy
		Cent	0.5	1.8
		678	0.2	2.4
		679	0.2	1.2
		686	0.8	1.2
		685	0.8	2.4

LC		NODE	Fxx	Fyy	Fxy	Fmax	Fmin	ANGLE
RC ENV~1	Max	Cent	0.5	1.7	1.3	2.5	-0.1	57.51
		678	0.2	2.2	1.3	2.9	-0.2	63.24
		679	0.2	1.3	1.3	2.2	-0.2	55.72
		686	0.7	1.3	1.3	2.3	0.0	51.07
		685	0.7	2.2	1.3	3.0	0.0	59.66
	Min	Cent	-1.0	-0.4	-1.5	0.8	-2.2	-51.27
		678	-0.9	-0.6	-1.5	0.7	-2.2	-48.03
		679	-0.9	-0.2	-1.5	0.7	-2.0	86.02
		686	-1.1	-0.2	-1.5	0.7	-2.1	84.60
		685	-1.1	-0.6	-1.5	0.6	-2.3	-49.62

		NODE	Mxx	Myy	Mxy	Mmax	Mmin	ANGLE
	Max	Cent	5.0	0.4	2.1	5.1	0.1	-3.63
		678	3.6	-1.2	1.9	3.7	-1.7	-7.70
		679	6.4	1.6	1.7	6.5	1.6	-8.71
		686	5.7	1.3	2.2	5.7	1.2	0.64
		685	4.4	1.1	2.4	4.4	-0.7	0.61
	Min	Cent	-2.8	-5.6	-0.4	-2.2	-6.2	23.33
		678	-3.1	-6.5	-0.9	-2.7	-6.8	16.33
		679	-2.7	-4.4	-0.9	-1.9	-4.9	23.73
		686	-3.4	-4.9	0.1	-2.3	-5.9	32.77
		685	-2.6	-6.6	0.1	-1.9	-7.3	20.73

		NODE	Vxx	Vyy
	Max	Cent	1.2	0.7

		678	0.4	0.5	
		679	0.4	0.8	
		686	2.0	0.8	
		685	2.0	0.5	
	Min	Cent	-3.5	-3.0	
		678	-4.5	-4.3	
		679	-4.5	-1.6	
		686	-2.5	-1.6	
		685	-2.5	-4.3	

LC		NODE	Fxx	Fyy	Fxy	Fmax	Fmin	ANGLE
RC ENV~2	Max	Cent	-0.1	1.2	0.0	1.2	-0.1	-83.06
		678	-0.2	1.4	0.0	1.4	-0.2	-88.33
		679	-0.2	1.0	0.0	1.0	-0.2	-82.83
		686	-0.0	1.0	0.0	1.0	-0.0	-81.36
		685	-0.0	1.4	0.0	1.4	-0.0	-83.28
	Min	Cent	-0.5	0.7	-0.2	0.7	-0.5	-89.51
		678	-0.6	0.8	-0.2	0.8	-0.6	-85.65
		679	-0.6	0.5	-0.2	0.5	-0.6	87.19
		686	-0.3	0.5	-0.2	0.5	-0.3	86.27
		685	-0.3	0.8	-0.2	0.8	-0.3	-84.67

		NODE	Mxx	Myy	Mxy	Mmax	Mmin	ANGLE
	Max	Cent	2.8	-0.4	1.7	2.8	-0.4	0.77
		678	1.9	-1.7	1.4	1.9	-1.7	-4.14
		679	3.7	0.7	1.3	3.8	0.7	-5.21
		686	3.2	0.5	1.9	3.3	0.4	6.24
		685	2.5	-0.9	2.0	2.5	-1.0	5.26
	Min	Cent	-2.1	-2.8	0.1	-0.7	-4.1	37.15
		678	-2.4	-4.1	-0.3	-1.5	-4.8	30.00
		679	-1.7	-2.1	-0.3	-0.6	-3.1	39.23
		686	-2.3	-2.0	0.4	-0.3	-4.0	46.65
		685	-1.9	-3.0	0.4	-0.3	-4.4	37.62

		NODE	Vxx	Vyy
	Max	Cent	0.5	-0.6
		678	-0.3	-1.3
		679	-0.3	0.2
		686	1.4	0.2
		685	1.4	-1.3
	Min	Cent	-2.2	-1.2
		678	-2.9	-1.9
		679	-2.9	-0.4
		686	-1.4	-0.4
		685	-1.4	-1.9

ELEM	MAT	SEC	LC		NODE	Fxx	Fyy	Fxy	Fmax	Fmin	ANGLE
659	1	1	SX (RS)		Cent	0.3	0.3	1.0	1.2	-0.7	44.99
					679	0.4	0.3	1.0	1.3	-0.6	43.84
					680	0.4	0.2	1.0	1.3	-0.7	42.63
					687	0.2	0.2	1.0	1.2	-0.8	45.64
					686	0.2	0.3	1.0	1.2	-0.7	46.85

		NODE	Mxx	Myy	Mxy	Mmax	Mmin	ANGLE
		Cent	1.1	0.4	0.2	1.1	0.4	15.01
		679	1.0	0.5	0.3	1.1	0.4	23.01
		680	1.5	0.4	0.2	1.5	0.4	9.93
		687	1.3	0.5	0.1	1.3	0.4	7.95
		686	0.7	0.4	0.2	0.8	0.3	30.36

		NODE	Vxx	Vyy
		Cent	1.5	0.5
		679	1.3	0.6
		680	1.3	0.4
		687	1.7	0.4
		686	1.7	0.6

LC		NODE	Fxx	Fyy	Fxy	Fmax	Fmin	ANGLE
SY (RS)		Cent	0.7	0.6	1.5	2.1	-0.8	43.62

		679	0.5	0.7	1.5	2.1	-0.8	47.14
		680	0.5	0.5	1.5	2.0	-1.0	44.87
		687	1.0	0.5	1.5	2.2	-0.7	40.30
		686	1.0	0.7	1.5	2.3	-0.6	42.54

		NODE	Mxx	Myy	Mxy	Mmax	Mmin	ANGLE
		Cent	0.7	2.6	0.4	2.7	0.6	78.97
		679	0.6	2.6	0.2	2.6	0.6	82.82
		680	0.6	2.2	0.4	2.3	0.6	77.76
		687	0.9	2.4	0.6	2.6	0.7	72.22
		686	0.8	3.2	0.4	3.3	0.7	80.43

		NODE	Vxx	Vyy
		Cent	0.1	0.9
		679	0.2	1.2
		680	0.2	0.5
		687	0.1	0.5
		686	0.1	1.2

LC		NODE	Fxx	Fyy	Fxy	Fmax	Fmin	ANGLE
RC ENV~1	Max	Cent	0.6	1.2	1.5	2.4	0.1	49.85
		679	0.2	1.4	1.5	2.4	-0.1	54.83
		680	0.2	1.0	1.5	2.1	-0.1	51.42
		687	1.0	1.0	1.5	2.4	0.3	44.73
		686	1.0	1.4	1.5	2.7	0.3	48.42
	Min	Cent	-0.9	-0.1	-1.4	0.6	-2.0	87.36
		679	-0.8	-0.2	-1.4	0.8	-1.9	88.28
		680	-0.8	-0.1	-1.4	0.5	-1.9	87.68
		687	-1.0	-0.1	-1.4	0.5	-2.1	84.31
		686	-1.0	-0.2	-1.4	0.8	-2.1	86.93

		NODE	Mxx	Myy	Mxy	Mmax	Mmin	ANGLE
	Max	Cent	5.2	2.1	1.6	5.2	2.0	-6.77
		679	4.8	1.4	1.4	5.0	1.3	-11.65
		680	6.2	3.4	1.2	6.3	3.2	-13.35
		687	5.5	2.5	1.8	5.5	2.5	-2.40
		686	4.5	1.2	2.0	4.5	1.1	-3.26
	Min	Cent	-3.9	-4.1	-0.7	-2.9	-4.7	35.96
		679	-3.6	-4.6	-1.0	-2.8	-5.1	25.74
		680	-3.9	-3.0	-1.2	-2.5	-4.0	47.11
		687	-4.6	-3.6	-0.5	-3.1	-5.0	54.78
		686	-3.8	-5.1	-0.2	-3.1	-5.8	29.53

		NODE	Vxx	Vyy
	Max	Cent	2.0	1.1
		679	1.5	0.8
		680	1.5	1.7
		687	2.4	1.7
		686	2.4	0.8
	Min	Cent	-1.8	-0.8
		679	-2.0	-1.6
		680	-2.0	0.1
		687	-1.5	0.1
		686	-1.5	-1.6

LC		NODE	Fxx	Fyy	Fxy	Fmax	Fmin	ANGLE
RC ENV~2	Max	Cent	0.0	0.9	0.2	0.9	0.0	84.15
		679	-0.1	1.0	0.2	1.0	-0.1	-88.73
		680	-0.1	0.7	0.2	0.7	-0.1	84.55
		687	0.2	0.7	0.2	0.7	0.2	81.35
		686	0.2	1.0	0.2	1.0	0.2	-88.14
	Min	Cent	-0.3	0.5	-0.1	0.5	-0.3	87.28
		679	-0.5	0.6	-0.1	0.6	-0.5	88.16
		680	-0.5	0.4	-0.1	0.4	-0.5	87.57
		687	-0.1	0.4	-0.1	0.4	-0.1	84.79
		686	-0.1	0.6	-0.1	0.6	-0.1	86.90

		NODE	Mxx	Myy	Mxy	Mmax	Mmin	ANGLE
	Max	Cent	2.7	1.0	1.3	2.7	1.0	0.98
		679	2.6	0.5	1.2	2.7	0.5	-8.28

680	3.5	2.0	0.9	3.5	2.0	-10.41
687	2.9	1.3	1.3	2.9	1.3	5.72
686	2.3	0.3	1.6	2.3	0.3	2.55
Min Cent	-2.8	-1.7	-0.2	-1.0	-3.6	58.08
679	-2.6	-2.3	-0.4	-1.3	-3.5	48.22
680	-2.5	-0.9	-0.6	-0.6	-2.8	67.20
687	-3.4	-1.4	-0.1	-0.8	-4.0	64.48
686	-3.0	-2.2	0.1	-1.0	-4.2	52.48

	NODE	Vxx	Vyy
Max	Cent	0.7	0.7
	679	0.5	0.2
	680	0.5	1.1
	687	1.0	1.1
	686	1.0	0.2
Min	Cent	-1.0	0.1
	679	-1.3	-0.4
	680	-1.3	0.6
	687	-0.8	0.6
	686	-0.8	-0.4

ELEM	MAT	SEC	LC		NODE	Fxx	Fyy	Fxy	Fmax	Fmin	ANGLE
660	1	1	SX	(RS)	Cent	0.5	0.2	0.9	1.2	-0.5	41.09
					680	0.5	0.2	0.9	1.2	-0.5	40.48
					681	0.5	0.2	0.9	1.3	-0.5	40.97
					688	0.5	0.2	0.9	1.3	-0.5	40.90
					687	0.5	0.2	0.9	1.3	-0.5	40.41

	NODE	Mxx	Myy	Mxy	Mmax	Mmin	ANGLE
	Cent	1.8	0.4	0.3	1.9	0.4	9.70
	680	1.5	0.4	0.2	1.6	0.4	11.99
	681	2.3	0.4	0.3	2.3	0.3	9.89
	688	2.2	0.5	0.3	2.3	0.4	8.44
	687	1.4	0.5	0.2	1.4	0.5	9.95

	NODE	Vxx	Vyy
	Cent	1.7	0.4
	680	1.6	0.4
	681	1.6	0.4
	688	1.7	0.4
	687	1.7	0.4

LC		NODE	Fxx	Fyy	Fxy	Fmax	Fmin	ANGLE
SY	(RS)	Cent	0.6	0.4	1.3	1.8	-0.8	43.21
		680	0.4	0.5	1.3	1.8	-0.9	45.43
		681	0.4	0.4	1.3	1.7	-0.9	44.38
		688	0.8	0.4	1.3	1.9	-0.8	40.89
		687	0.8	0.5	1.3	1.9	-0.7	41.93

	NODE	Mxx	Myy	Mxy	Mmax	Mmin	ANGLE
	Cent	0.6	2.2	0.6	2.4	0.5	71.93
	680	0.6	2.2	0.5	2.4	0.5	74.92
	681	0.6	2.0	0.5	2.2	0.4	71.20
	688	0.7	2.2	0.7	2.5	0.4	69.05
	687	0.7	2.5	0.6	2.7	0.5	72.63

	NODE	Vxx	Vyy
	Cent	0.2	0.4
	680	0.2	0.5
	681	0.2	0.4
	688	0.3	0.4
	687	0.3	0.5

LC		NODE	Fxx	Fyy	Fxy	Fmax	Fmin	ANGLE
RC ENV~1	Max	Cent	0.5	0.9	1.5	2.2	0.0	48.31
		680	0.3	1.0	1.5	2.1	-0.1	51.39
		681	0.3	0.9	1.5	2.0	-0.1	50.09
		688	0.8	0.9	1.5	2.3	0.1	45.05

		687	0.8	1.0	1.5	2.4	0.2	46.40
	Min	Cent	-0.7	-0.0	-1.1	0.5	-1.5	83.62
		680	-0.7	-0.0	-1.1	0.5	-1.5	84.84
		681	-0.7	0.0	-1.1	0.5	-1.5	84.49
		688	-0.8	0.0	-1.1	0.5	-1.6	81.66
		687	-0.8	-0.0	-1.1	0.5	-1.6	82.42

		NODE	Mxx	Myy	Mxy	Mmax	Mmin	ANGLE
	Max	Cent	5.8	3.2	1.2	5.9	3.1	-12.78
		680	5.4	3.3	1.2	5.6	3.1	-16.26
		681	6.6	4.2	1.0	6.8	4.0	-16.57
		688	6.2	3.2	1.3	6.2	3.1	-9.83
		687	5.0	2.4	1.5	5.1	2.3	-9.23
	Min	Cent	-4.9	-3.0	-1.1	-3.0	-4.9	83.60
		680	-4.5	-3.1	-1.2	-3.0	-4.6	68.96
		681	-4.7	-2.2	-1.3	-2.2	-4.7	-82.95
		688	-5.4	-3.0	-1.0	-3.0	-5.4	-86.09
		687	-5.0	-3.8	-0.8	-3.7	-5.2	68.18

		NODE	Vxx	Vyy
	Max	Cent	1.0	1.8
		680	0.9	1.7
		681	0.9	2.0
		688	1.0	2.0
		687	1.0	1.7
	Min	Cent	-2.4	0.3
		680	-2.4	0.1
		681	-2.4	0.5
		688	-2.4	0.5
		687	-2.4	0.1

LC		NODE	Fxx	Fyy	Fxy	Fmax	Fmin	ANGLE
RC ENV~2	Max	Cent	0.2	0.7	0.4	0.8	0.0	68.33
		680	0.0	0.7	0.4	0.8	-0.1	72.54
		681	0.0	0.6	0.4	0.7	-0.1	70.99
		688	0.3	0.6	0.4	0.8	0.1	62.26
		687	0.3	0.7	0.4	0.9	0.1	65.03
	Min	Cent	-0.2	0.4	0.1	0.4	-0.3	81.88
		680	-0.4	0.4	0.1	0.4	-0.5	83.38
		681	-0.4	0.4	0.1	0.4	-0.5	82.95
		688	-0.1	0.4	0.1	0.4	-0.1	79.56
		687	-0.1	0.4	0.1	0.4	-0.1	80.46

		NODE	Mxx	Myy	Mxy	Mmax	Mmin	ANGLE
	Max	Cent	3.1	1.9	0.7	3.2	1.9	-11.66
		680	2.9	1.9	0.7	3.0	1.8	-15.84
		681	3.7	2.6	0.5	3.9	2.5	-18.13
		688	3.3	1.9	0.6	3.4	1.8	-8.34
		687	2.5	1.3	0.9	2.5	1.3	-5.13
	Min	Cent	-3.2	-0.9	-0.6	-0.8	-3.3	76.56
		680	-3.1	-1.0	-0.6	-0.9	-3.2	74.79
		681	-2.6	-0.3	-0.8	-0.3	-2.7	82.03
		688	-3.4	-0.9	-0.5	-0.8	-3.5	78.00
		687	-3.8	-1.5	-0.4	-1.2	-4.0	72.26

		NODE	Vxx	Vyy
	Max	Cent	-0.2	1.3
		680	-0.2	1.1
		681	-0.2	1.4
		688	-0.1	1.4
		687	-0.1	1.1
	Min	Cent	-1.4	0.7
		680	-1.4	0.6
		681	-1.4	0.9
		688	-1.4	0.9
		687	-1.4	0.6

ELEM	MAT	SEC	LC		NODE	Fxx	Fyy	Fxy	Fmax	Fmin	ANGLE
661	1	1	SX (RS)		Cent	0.7	0.3	0.9	1.4	-0.5	38.27
					681	0.6	0.2	0.9	1.3	-0.5	39.41
					682	0.6	0.3	0.9	1.3	-0.5	40.34

689	0.8	0.3	0.9	1.5	-0.4	36.32
688	0.8	0.2	0.9	1.5	-0.4	35.46

NODE	Mxx	Myy	Mxy	Mmax	Mmin	ANGLE
Cent	2.7	0.4	0.5	2.8	0.3	10.78
681	2.4	0.4	0.4	2.5	0.3	12.02
682	3.1	0.3	0.6	3.2	0.2	10.69
689	3.2	0.5	0.5	3.2	0.4	9.96
688	2.3	0.5	0.4	2.4	0.4	11.13

NODE	Vxx	Vyy
Cent	1.5	0.4
681	1.5	0.4
682	1.5	0.4
689	1.6	0.4
688	1.6	0.4

LC		NODE	Fxx	Fyy	Fxy	Fmax	Fmin	ANGLE
SY (RS)		Cent	0.4	0.3	1.4	1.7	-1.0	43.80
		681	0.3	0.4	1.4	1.7	-1.0	45.42
		682	0.3	0.3	1.4	1.7	-1.0	45.26
		689	0.6	0.3	1.4	1.8	-0.9	42.28
		688	0.6	0.4	1.4	1.8	-0.9	42.43

NODE	Mxx	Myy	Mxy	Mmax	Mmin	ANGLE
Cent	0.6	2.1	0.6	2.3	0.4	70.57
681	0.6	2.0	0.6	2.2	0.4	70.84
682	0.6	2.0	0.5	2.2	0.4	71.03
689	0.6	2.2	0.6	2.5	0.4	70.49
688	0.6	2.2	0.7	2.5	0.4	70.12

NODE	Vxx	Vyy
Cent	0.1	0.4
681	0.1	0.4
682	0.1	0.4
689	0.2	0.4
688	0.2	0.4

LC		NODE	Fxx	Fyy	Fxy	Fmax	Fmin	ANGLE
RC ENV~1	Max	Cent	0.6	0.9	1.7	2.3	-0.1	47.85
		681	0.4	0.9	1.7	2.2	-0.2	50.07
		682	0.4	0.8	1.7	2.2	-0.2	49.94
		689	0.9	0.8	1.7	2.4	0.0	45.68
		688	0.9	0.9	1.7	2.4	0.1	45.80
	Min	Cent	-0.7	0.1	-1.0	0.4	-1.3	-63.83
		681	-0.7	0.0	-1.0	0.5	-1.3	-64.41
		682	-0.7	0.1	-1.0	0.4	-1.3	-63.47
		689	-0.8	0.1	-1.0	0.4	-1.3	-64.13
		688	-0.8	0.0	-1.0	0.4	-1.3	-65.05

NODE		Mxx	Myy	Mxy	Mmax	Mmin	ANGLE
	Max	Cent	7.0	3.7	0.8	7.1	3.6	-12.58
		681	6.4	4.2	0.8	6.6	4.0	-15.95
		682	7.8	4.2	0.6	7.9	4.0	-11.25
		689	7.6	3.4	0.7	7.8	3.3	-10.43
		688	6.0	3.1	0.9	6.2	2.9	-13.87
	Min	Cent	-5.0	-2.5	-1.3	-2.2	-5.0	-57.52
		681	-5.0	-2.2	-1.3	-2.1	-5.0	-73.98
		682	-4.5	-2.0	-1.3	-1.5	-4.6	-44.51
		689	-5.0	-2.7	-1.3	-2.0	-5.1	-40.93
		688	-5.6	-3.0	-1.2	-2.9	-5.6	-69.18

NODE		Vxx	Vyy
	Max	Cent	-0.7	1.8
		681	-0.6	2.0
		682	-0.6	1.6
		689	-0.8	1.6
		688	-0.8	2.0
	Min	Cent	-3.8	0.4

		681	-3.6	0.5
		682	-3.6	0.2
		689	-4.0	0.2
		688	-4.0	0.5

LC		NODE	Fxx	Fyy	Fxy	Fmax	Fmin	ANGLE
RC ENV~2	Max	Cent	0.3	0.6	0.6	1.0	-0.1	57.64
		681	0.1	0.7	0.6	1.0	-0.2	62.37
		682	0.1	0.6	0.6	0.9	-0.2	61.73
		689	0.5	0.6	0.6	1.1	0.0	52.04
		688	0.5	0.7	0.6	1.1	0.0	52.91
	Min	Cent	-0.2	0.4	0.2	0.4	-0.4	72.58
		681	-0.4	0.4	0.2	0.4	-0.6	74.02
		682	-0.4	0.3	0.2	0.4	-0.6	74.15
		689	-0.1	0.3	0.2	0.4	-0.3	70.89
		688	-0.1	0.4	0.2	0.4	-0.3	70.71

	NODE	Mxx	Myy	Mxy	Mmax	Mmin	ANGLE
Max	Cent	4.0	2.3	0.2	4.1	2.2	-13.68
	681	3.6	2.6	0.3	3.7	2.5	-18.80
	682	4.7	2.6	0.1	4.8	2.5	-11.94
	689	4.5	2.1	0.1	4.6	2.0	-10.97
	688	3.2	1.8	0.3	3.3	1.7	-15.65
Min	Cent	-2.5	-0.5	-0.8	-0.5	-2.5	88.02
	681	-2.8	-0.4	-0.8	-0.3	-2.8	86.03
	682	-1.7	-0.1	-0.8	-0.1	-1.7	88.09
	689	-2.2	-0.6	-0.8	-0.6	-2.2	-89.18
	688	-3.5	-1.0	-0.7	-1.0	-3.5	85.69

	NODE	Vxx	Vyy
Max	Cent	-1.4	1.3
	681	-1.3	1.4
	682	-1.3	1.1
	689	-1.6	1.1
	688	-1.6	1.4
Min	Cent	-2.5	0.8
	681	-2.3	0.9
	682	-2.3	0.6
	689	-2.6	0.6
	688	-2.6	0.9

ELEM	MAT	SEC	LC		NODE	Fxx	Fyy	Fxy	Fmax	Fmin	ANGLE
662	1	1	SX (RS)		Cent	0.8	0.3	1.0	1.6	-0.5	37.80
					682	0.5	0.3	1.0	1.4	-0.6	41.11
					683	0.5	0.3	1.0	1.5	-0.6	42.07
					690	1.1	0.3	1.0	1.8	-0.3	34.29
					689	1.1	0.3	1.0	1.8	-0.4	33.46

	NODE	Mxx	Myy	Mxy	Mmax	Mmin	ANGLE
	Cent	3.5	0.3	0.7	3.7	0.2	12.25
	682	3.2	0.3	0.7	3.4	0.2	12.42
	683	3.6	0.2	0.8	3.8	-0.0	12.91
	690	3.9	0.4	0.8	4.1	0.3	12.03
	689	3.3	0.5	0.6	3.4	0.4	11.86

	NODE	Vxx	Vyy
	Cent	1.0	0.4
	682	0.8	0.4
	683	0.8	0.4
	690	1.2	0.4
	689	1.2	0.4

LC		NODE	Fxx	Fyy	Fxy	Fmax	Fmin	ANGLE
SY (RS)		Cent	0.3	0.3	1.6	1.9	-1.3	45.10
		682	0.3	0.3	1.6	1.9	-1.3	45.67
		683	0.3	0.4	1.6	1.9	-1.2	46.56
		690	0.4	0.4	1.6	2.0	-1.1	45.29
		689	0.4	0.3	1.6	1.9	-1.2	44.40

	NODE	Mxx	Myy	Mxy	Mmax	Mmin	ANGLE
	Cent	0.5	2.2	0.5	2.3	0.4	74.27
	682	0.5	2.0	0.5	2.2	0.3	72.61
	683	0.5	2.1	0.5	2.2	0.4	75.17
	690	0.6	2.5	0.5	2.7	0.5	75.81
	689	0.5	2.2	0.6	2.4	0.3	72.84

	NODE	Vxx	Vyy
	Cent	0.1	0.6
	682	0.1	0.4
	683	0.1	0.8
	690	0.1	0.8
	689	0.1	0.4

LC		NODE	Fxx	Fyy	Fxy	Fmax	Fmin	ANGLE
RC ENV~1	Max	Cent	0.8	1.1	2.0	2.6	-0.2	48.65
		682	0.4	0.9	2.0	2.5	-0.4	49.51
		683	0.4	1.3	2.0	2.7	-0.4	51.46
		690	1.3	1.3	2.0	2.8	0.1	48.37
		689	1.3	0.9	2.0	2.7	-0.1	46.35
	Min	Cent	-0.8	0.2	-1.1	0.4	-1.5	-67.02
		682	-0.7	0.1	-1.1	0.4	-1.6	-64.29
		683	-0.7	0.2	-1.1	0.5	-1.5	-66.21
		690	-1.0	0.2	-1.1	0.5	-1.3	-69.69
		689	-1.0	0.1	-1.1	0.4	-1.4	-68.19

	NODE	Mxx	Myy	Mxy	Mmax	Mmin	ANGLE
Max	Cent	8.8	3.7	0.5	8.9	3.5	-8.57
	682	8.1	4.2	0.6	8.2	4.1	-9.03
	683	9.4	3.6	0.6	9.5	3.4	-5.77
	690	9.7	3.3	0.5	9.8	3.2	-8.05
	689	7.8	3.5	0.4	8.0	3.3	-11.73
Min	Cent	-4.1	-2.4	-1.4	-0.7	-4.3	-23.70
	682	-4.5	-2.0	-1.3	-1.3	-4.6	-40.01
	683	-3.1	-2.2	-1.3	0.1	-3.4	-71.95
	690	-3.6	-2.7	-1.6	-0.3	-3.9	-71.59
	689	-5.1	-2.6	-1.5	-1.6	-5.2	-38.56

	NODE	Vxx	Vyy
Max	Cent	-2.3	1.1
	682	-2.0	1.6
	683	-2.0	0.9
	690	-2.5	0.9
	689	-2.5	1.6
Min	Cent	-4.6	-0.2
	682	-4.1	0.2
	683	-4.1	-0.7
	690	-5.0	-0.7
	689	-5.0	0.2

LC		NODE	Fxx	Fyy	Fxy	Fmax	Fmin	ANGLE
RC ENV~2	Max	Cent	0.4	0.8	0.9	1.4	-0.2	54.77
		682	0.1	0.6	0.9	1.2	-0.3	57.42
		683	0.1	1.0	0.9	1.4	-0.3	61.41
		690	0.7	1.0	0.9	1.6	0.0	51.93
		689	0.7	0.6	0.9	1.5	-0.1	46.85
	Min	Cent	-0.3	0.4	0.3	0.5	-0.5	69.85
		682	-0.4	0.3	0.3	0.4	-0.7	69.84
		683	-0.4	0.5	0.3	0.6	-0.7	72.30
		690	-0.2	0.5	0.3	0.6	-0.3	69.86
		689	-0.2	0.3	0.3	0.5	-0.4	66.79

	NODE	Mxx	Myy	Mxy	Mmax	Mmin	ANGLE
Max	Cent	5.5	2.3	-0.2	5.6	2.2	-9.12
	682	4.9	2.7	-0.0	5.0	2.6	-9.85
	683	6.1	2.3	-0.1	6.1	2.1	-5.94
	690	6.2	2.1	-0.3	6.3	2.0	-8.46
	689	4.6	2.1	-0.2	4.8	2.0	-13.13
Min	Cent	-0.8	-0.3	-0.9	-0.2	-1.0	-65.09
	682	-1.5	-0.1	-0.8	-0.1	-1.6	-86.03

683	0.3	-0.2	-0.9	0.4	-0.4	-26.00
690	0.1	-0.3	-1.1	0.3	-0.6	-33.33
689	-2.1	-0.6	-1.0	-0.5	-2.2	-79.71

	NODE	Vxx	Vyy
Max	Cent	-2.1	0.8
	682	-1.9	1.1
	683	-1.9	0.5
	690	-2.3	0.5
	689	-2.3	1.1
Min	Cent	-3.7	0.4
	682	-3.4	0.6
	683	-3.4	0.1
	690	-4.0	0.1
	689	-4.0	0.6

ELEM	MAT	SEC	LC		NODE	Fxx	Fyy	Fxy	Fmax	Fmin	ANGLE
663	1	1	SX	(RS)	Cent	0.6	0.3	0.9	1.4	-0.5	41.12
					683	0.5	0.3	0.9	1.3	-0.5	42.20
					684	0.5	0.4	0.9	1.4	-0.5	43.04
					691	0.7	0.4	0.9	1.5	-0.4	40.11
					690	0.7	0.3	0.9	1.5	-0.5	39.29

NODE	Mxx	Myy	Mxy	Mmax	Mmin	ANGLE
Cent	3.7	0.3	1.2	4.1	-0.1	16.89
683	3.6	0.2	1.0	3.9	-0.1	15.57
684	3.5	0.3	1.3	3.9	-0.1	19.67
691	3.7	0.1	1.2	4.1	-0.2	17.38
690	4.1	0.5	1.0	4.3	0.2	14.64

NODE	Vxx	Vyy
Cent	0.4	0.2
683	0.4	0.4
684	0.4	0.5
691	0.5	0.5
690	0.5	0.4

LC		NODE	Fxx	Fyy	Fxy	Fmax	Fmin	ANGLE
SY	(RS)	Cent	0.3	0.7	1.6	2.1	-1.1	48.23
		683	0.2	0.4	1.6	1.9	-1.3	47.15
		684	0.2	1.1	1.6	2.3	-1.0	52.50
		691	0.5	1.1	1.6	2.4	-0.9	49.85
		690	0.5	0.4	1.6	2.1	-1.1	44.37

NODE	Mxx	Myy	Mxy	Mmax	Mmin	ANGLE
Cent	0.5	2.4	0.4	2.5	0.4	79.74
683	0.4	2.1	0.4	2.2	0.3	77.53
684	0.5	2.1	0.3	2.2	0.4	79.48
691	0.6	2.9	0.3	2.9	0.6	81.54
690	0.4	2.5	0.4	2.6	0.3	79.03

NODE	Vxx	Vyy
Cent	0.3	1.2
683	0.1	0.8
684	0.1	1.5
691	0.5	1.5
690	0.5	0.8

LC		NODE	Fxx	Fyy	Fxy	Fmax	Fmin	ANGLE
RC ENV~1	Max	Cent	0.5	1.5	2.1	3.1	-0.3	52.88
		683	0.4	1.3	2.1	2.7	-0.4	51.47
		684	0.4	2.0	2.1	3.3	-0.3	57.13
		691	0.7	2.0	2.1	3.5	-0.2	54.63
		690	0.7	1.3	2.1	2.9	-0.2	48.66
	Min	Cent	-0.7	0.0	-1.1	0.6	-1.3	-70.78
		683	-0.6	0.2	-1.1	0.4	-1.6	-68.36
		684	-0.6	-0.2	-1.1	0.7	-1.4	-71.87
		691	-0.7	-0.2	-1.1	0.7	-1.5	-72.74

		690	-0.7	0.2	-1.1	0.4	-1.4	-69.52

	NODE	Mxx	Myy	Mxy	Mmax	Mmin	ANGLE
Max	Cent	10.6	3.2	0.8	10.7	3.1	-4.50
	683	10.1	3.8	0.8	10.2	3.6	-4.20
	684	10.7	2.6	1.0	10.7	2.5	-3.86
	691	11.6	3.2	0.8	11.7	3.1	-6.35
	690	10.2	3.4	0.6	10.3	3.3	-7.23
Min	Cent	-1.8	-2.4	-1.6	0.6	-2.8	-58.36
	683	-2.8	-2.1	-1.4	0.4	-3.3	-67.26
	684	-0.6	-2.3	-1.6	1.0	-2.4	-45.30
	691	-0.5	-2.7	-1.8	1.4	-2.8	-49.97
	690	-3.5	-2.6	-1.8	-0.0	-4.1	-67.55

	NODE	Vxx	Vyy
Max	Cent	-2.0	0.9
	683	-1.4	0.9
	684	-1.4	0.8
	691	-2.6	0.8
	690	-2.6	0.9
Min	Cent	-4.6	-1.4
	683	-4.1	-0.7
	684	-4.1	-2.2
	691	-5.1	-2.2
	690	-5.1	-0.7

LC		NODE	Fxx	Fyy	Fxy	Fmax	Fmin	ANGLE
RC ENV~2	Max	Cent	0.2	1.1	0.9	1.6	-0.2	60.49
		683	0.1	0.9	0.9	1.5	-0.3	59.80
		684	0.1	1.3	0.9	1.8	-0.3	63.97
		691	0.3	1.3	0.9	1.8	-0.1	61.16
		690	0.3	0.9	0.9	1.5	-0.2	56.43
	Min	Cent	-0.3	0.7	0.3	0.8	-0.5	73.77
		683	-0.3	0.5	0.3	0.6	-0.7	71.00
		684	-0.3	0.8	0.3	0.9	-0.6	76.63
		691	-0.2	0.8	0.3	0.9	-0.4	75.89
		690	-0.2	0.5	0.3	0.6	-0.5	69.60

	NODE	Mxx	Myy	Mxy	Mmax	Mmin	ANGLE
Max	Cent	7.1	2.0	-0.2	7.1	1.9	-4.78
	683	6.6	2.4	-0.1	6.6	2.2	-4.53
	684	7.3	1.6	-0.0	7.3	1.5	-3.94
	691	7.9	2.1	-0.3	8.0	1.9	-6.46
	690	6.6	2.1	-0.4	6.7	2.0	-7.79
Min	Cent	1.6	-0.2	-1.1	1.7	-0.3	-13.58
	683	0.6	-0.2	-1.0	0.8	-0.3	-23.11
	684	2.7	-0.4	-1.0	2.7	-0.4	-6.78
	691	2.9	-0.0	-1.2	3.0	-0.1	-9.99
	690	0.3	-0.3	-1.2	0.6	-0.6	-32.12

	NODE	Vxx	Vyy
Max	Cent	-2.0	-0.2
	683	-1.5	0.5
	684	-1.5	-0.5
	691	-2.5	-0.5
	690	-2.5	0.5
Min	Cent	-4.2	-0.3
	683	-3.8	0.1
	684	-3.8	-0.8
	691	-4.7	-0.8
	690	-4.7	0.1

ELEM	MAT	SEC	LC		NODE	Fxx	Fyy	Fxy	Fmax	Fmin	ANGLE
664	1	1	SX (RS)		Cent	0.7	0.5	0.9	1.5	-0.3	42.00
					684	0.3	0.4	0.9	1.2	-0.6	46.39
					240	0.3	0.6	0.9	1.4	-0.5	51.07
					243	1.1	0.6	0.9	1.8	-0.1	38.20
					691	1.1	0.4	0.9	1.7	-0.2	33.88

	NODE	Mxx	Myy	Mxy	Mmax	Mmin	ANGLE

Cent	3.1	0.5	1.6	3.8	-0.3	25.81
684	3.2	0.3	1.4	3.7	-0.3	21.85
240	2.4	1.0	1.7	3.5	-0.2	33.70
243	3.3	0.7	1.9	4.2	-0.3	27.79
691	3.4	0.1	1.5	4.0	-0.5	21.32

NODE	Vxx	Vyy
Cent	1.1	0.7
684	1.7	0.5
240	1.7	1.0
243	0.6	1.0
691	0.6	0.5

LC		NODE	Fxx	Fyy	Fxy	Fmax	Fmin	ANGLE
SY (RS)		Cent	0.4	1.3	1.1	2.1	-0.3	55.35
		684	0.2	1.0	1.1	1.8	-0.6	55.53
		240	0.2	1.5	1.1	2.2	-0.5	60.68
		243	0.7	1.5	1.1	2.3	-0.1	55.12
		691	0.7	1.0	1.1	2.0	-0.3	49.11

	NODE	Mxx	Myy	Mxy	Mmax	Mmin	ANGLE
	Cent	0.6	2.5	0.2	2.6	0.5	83.22
	684	0.3	2.1	0.3	2.1	0.3	82.06
	240	0.4	2.1	0.2	2.2	0.3	82.97
	243	0.8	3.0	0.3	3.0	0.8	83.51
	691	0.7	2.9	0.3	3.0	0.7	83.02

	NODE	Vxx	Vyy
	Cent	0.2	1.6
	684	0.1	1.5
	240	0.1	1.6
	243	0.2	1.6
	691	0.2	1.5

LC		NODE	Fxx	Fyy	Fxy	Fmax	Fmin	ANGLE
RC ENV~1	Max	Cent	0.5	2.3	1.5	3.1	-0.2	61.84
		684	0.1	1.9	1.5	2.7	-0.2	61.54
		240	0.1	2.6	1.5	3.3	-0.2	65.87
		243	1.0	2.6	1.5	3.4	0.1	62.10
		691	1.0	1.9	1.5	2.9	0.0	56.85
	Min	Cent	-0.8	-0.3	-0.8	0.4	-1.2	-49.97
		684	-0.4	-0.1	-0.8	0.5	-1.0	-48.58
		240	-0.4	-0.4	-0.8	0.4	-1.2	-43.06
		243	-1.2	-0.4	-0.8	0.2	-1.4	-51.40
		691	-1.2	-0.1	-0.8	0.4	-1.3	-56.41

	NODE	Mxx	Myy	Mxy	Mmax	Mmin	ANGLE
Max	Cent	11.8	2.8	1.3	11.8	2.8	-2.45
	684	11.3	2.7	1.1	11.3	2.6	-2.84
	240	11.5	2.3	1.5	11.5	2.3	-0.95
	243	12.6	3.9	1.6	12.6	3.9	-1.92
	691	11.8	3.3	1.2	11.9	3.2	-3.88
Min	Cent	1.5	-2.3	-1.9	2.7	-2.3	-32.36
	684	-0.1	-2.3	-1.7	1.4	-2.3	-41.72
	240	3.4	-2.0	-1.9	4.2	-2.0	-20.86
	243	2.9	-2.2	-2.1	4.1	-2.2	-28.29
	691	-0.2	-2.7	-1.9	1.8	-2.8	-47.57

	NODE	Vxx	Vyy
Max	Cent	-0.7	0.6
	684	-0.3	0.8
	240	-0.3	0.4
	243	-1.1	0.4
	691	-1.1	0.8
Min	Cent	-6.1	-2.5
	684	-6.4	-2.2
	240	-6.4	-2.8
	243	-5.7	-2.8
	691	-5.7	-2.2

LC		NODE	Fxx	Fyy	Fxy	Fmax	Fmin	ANGLE
RC ENV~2	Max	Cent	0.2	1.5	0.7	1.7	-0.1	67.35
		684	-0.1	1.3	0.7	1.6	-0.2	68.45
		240	-0.1	1.8	0.7	1.8	-0.2	79.02
		243	0.4	1.8	0.7	1.8	-0.0	78.94
		691	0.4	1.3	0.7	1.7	-0.0	64.21
	Min	Cent	-0.4	0.8	0.1	1.0	-0.4	79.77
		684	-0.3	0.8	0.1	0.9	-0.5	78.28
		240	-0.3	0.8	0.1	1.1	-0.5	65.60
		243	-0.4	0.8	0.1	1.1	-0.5	70.83
		691	-0.4	0.8	0.1	0.9	-0.5	78.48

	NODE	Mxx	Myy	Mxy	Mmax	Mmin	ANGLE
Max	Cent	8.3	1.7	0.1	8.3	1.7	-2.57
	684	7.7	1.7	0.0	7.7	1.6	-3.03
	240	8.3	1.2	0.3	8.3	1.2	-1.12
	243	9.1	2.0	0.2	9.1	2.0	-1.99
	691	8.1	2.1	0.0	8.1	2.0	-4.01
Min	Cent	4.4	0.1	-1.1	4.4	0.1	-5.00
	684	2.9	-0.4	-1.0	2.9	-0.4	-6.47
	240	5.7	-0.2	-1.0	5.7	-0.3	-3.19
	243	6.0	0.7	-1.1	6.0	0.5	-3.98
	691	3.0	-0.0	-1.1	3.0	-0.0	-8.07

	NODE	Vxx	Vyy
Max	Cent	-1.3	-0.8
	684	-1.0	-0.5
	240	-1.0	-1.0
	243	-1.6	-1.0
	691	-1.6	-0.5
Min	Cent	-5.1	-1.2
	684	-4.9	-0.8
	240	-4.9	-1.6
	243	-5.2	-1.6
	691	-5.2	-0.8

ELEM	MAT	SEC	LC		NODE	Fxx	Fyy	Fxy	Fmax	Fmin	ANGLE
665	1	1	SX (RS)		Cent	0.3	0.2	1.2	1.4	-1.0	43.56
					648	0.1	0.1	1.2	1.3	-1.1	44.20
					685	0.1	0.4	1.2	1.5	-0.9	48.33
					692	0.7	0.4	1.2	1.7	-0.6	41.41
					656	0.7	0.1	1.2	1.6	-0.9	37.43

	NODE	Mxx	Myy	Mxy	Mmax	Mmin	ANGLE
	Cent	0.2	0.1	0.7	0.9	-0.6	42.54
	648	0.8	0.2	0.5	1.0	-0.1	28.99
	685	0.4	0.7	0.9	1.4	-0.4	49.61
	692	1.9	1.1	0.8	2.5	0.6	31.19
	656	3.4	0.7	0.4	3.5	0.6	8.72

	NODE	Vxx	Vyy
	Cent	4.1	1.3
	648	0.9	0.0
	685	0.9	2.6
	692	8.9	2.6
	656	8.9	0.0

LC		NODE	Fxx	Fyy	Fxy	Fmax	Fmin	ANGLE
SY (RS)		Cent	1.2	3.1	1.1	3.6	0.7	65.37
		648	0.9	4.1	1.1	4.4	0.6	72.34
		685	0.9	2.2	1.1	2.8	0.3	59.46
		692	1.5	2.2	1.1	3.0	0.7	53.09
		656	1.5	4.1	1.1	4.5	1.1	69.48

	NODE	Mxx	Myy	Mxy	Mmax	Mmin	ANGLE
	Cent	0.8	5.0	0.2	5.0	0.8	87.34
	648	0.8	3.5	0.3	3.5	0.8	83.14
	685	0.8	4.3	0.1	4.3	0.8	88.45

		692	2.8	4.8	0.2	4.8	2.7	83.76
		656	2.6	7.5	0.2	7.5	2.6	88.20

	NODE	Vxx	Vyy
	Cent	4.3	4.5
	648	0.4	7.1
	685	0.4	2.0
	692	8.2	2.0
	656	8.2	7.1

LC		NODE	Fxx	Fyy	Fxy	Fmax	Fmin	ANGLE
RC ENV~1	Max	Cent	0.9	4.1	1.0	4.3	0.7	74.71
		648	0.7	5.2	1.0	5.4	0.5	78.87
		685	0.7	2.9	1.0	3.3	0.3	70.28
		692	1.2	2.9	1.0	3.4	0.8	66.25
		656	1.2	5.2	1.0	5.4	1.0	77.49
	Min	Cent	-1.5	-2.1	-1.4	-0.5	-3.1	-37.81
		648	-1.2	-2.9	-1.4	-0.5	-3.6	-28.29
		685	-1.2	-1.4	-1.4	-0.0	-2.6	-43.02
		692	-1.8	-1.4	-1.4	-0.3	-2.9	-49.70
		656	-1.8	-2.9	-1.4	-1.0	-3.8	-33.49

	NODE	Mxx	Myy	Mxy	Mmax	Mmin	ANGLE
Max	Cent	4.6	3.2	3.1	4.8	-0.6	11.21
	648	1.1	-1.0	2.3	1.2	-3.0	44.59
	685	5.4	1.5	3.3	5.5	-0.9	5.86
	692	7.4	5.0	3.7	7.8	2.1	14.68
	656	6.3	7.3	2.6	8.6	2.8	62.56
Min	Cent	-1.2	-6.8	0.7	-0.5	-7.5	18.79
	648	-2.5	-7.9	-0.1	-2.1	-8.3	14.12
	685	-2.0	-7.1	0.7	-1.1	-8.0	21.02
	692	-2.8	-4.5	1.3	-0.9	-6.4	35.80
	656	-2.0	-7.8	0.6	-0.7	-8.4	16.29

	NODE	Vxx	Vyy
Max	Cent	5.4	-1.6
	648	0.6	0.2
	685	0.6	-2.8
	692	11.5	-2.8
	656	11.5	0.2
Min	Cent	-5.6	-10.7
	648	-7.1	-14.0
	685	-7.1	-8.2
	692	-6.3	-8.2
	656	-6.3	-14.0

LC		NODE	Fxx	Fyy	Fxy	Fmax	Fmin	ANGLE
RC ENV~2	Max	Cent	-0.1	1.7	0.0	1.7	-0.1	-78.90
		648	0.0	2.1	0.0	2.1	-0.1	-85.75
		685	0.0	1.4	0.0	1.5	-0.1	-76.81
		692	-0.1	1.4	0.0	1.5	-0.1	-77.84
		656	-0.1	2.1	0.0	2.1	-0.1	-85.53
	Min	Cent	-0.5	0.9	-0.4	1.0	-0.5	-85.90
		648	-0.6	1.0	-0.4	1.2	-0.6	-74.84
		685	-0.6	0.7	-0.4	0.7	-0.6	89.81
		692	-0.5	0.7	-0.4	0.7	-0.6	89.76
		656	-0.5	1.0	-0.4	1.1	-0.6	-76.71

	NODE	Mxx	Myy	Mxy	Mmax	Mmin	ANGLE
Max	Cent	2.9	-0.5	2.4	3.2	-0.9	15.57
	648	0.4	-3.3	1.8	0.5	-3.4	3.57
	685	3.2	-0.9	2.5	3.4	-1.2	9.99
	692	4.7	1.6	2.9	5.2	1.0	20.37
	656	4.3	0.7	2.3	4.7	0.5	17.14
Min	Cent	-0.4	-2.1	0.8	1.3	-3.7	36.40
	648	-1.8	-5.2	0.3	-0.8	-5.5	26.73
	685	-1.2	-3.1	0.8	0.5	-4.7	35.23
	692	-0.2	0.1	1.3	2.9	-2.9	46.72
	656	1.2	-0.9	0.8	2.2	-1.9	30.48

NODE	Vxx	Vyy

Max	Cent	1.5	-5.1
	648	-0.2	-6.3
	685	-0.2	-4.0
	692	3.5	-4.0
	656	3.5	-6.3
Min	Cent	-3.4	-6.7
	648	-4.5	-7.2
	685	-4.5	-6.2
	692	-2.4	-6.2
	656	-2.4	-7.2

ELEM	MAT	SEC	LC		NODE	Fxx	Fyy	Fxy	Fmax	Fmin	ANGLE
666	1	1	SX (RS)		Cent	0.3	0.3	1.4	1.6	-1.1	44.50
					685	0.3	0.5	1.4	1.8	-1.0	47.60
					686	0.3	0.1	1.4	1.6	-1.2	43.64
					693	0.8	0.1	1.4	1.9	-0.9	37.68
					692	0.8	0.5	1.4	2.0	-0.7	41.50

	NODE	Mxx	Myy	Mxy	Mmax	Mmin	ANGLE
	Cent	0.7	0.2	0.3	0.8	0.1	25.76
	685	0.6	0.6	0.4	1.0	0.2	47.86
	686	0.6	0.3	0.3	0.8	0.2	30.03
	693	0.4	0.3	0.2	0.6	0.1	41.61
	692	1.7	1.0	0.4	1.9	0.8	24.10

	NODE	Vxx	Vyy
	Cent	1.7	1.7
	685	0.8	2.6
	686	0.8	0.8
	693	2.6	0.8
	692	2.6	2.6

LC		NODE	Fxx	Fyy	Fxy	Fmax	Fmin	ANGLE
SY (RS)		Cent	1.4	1.4	1.8	3.2	-0.4	45.08
		685	0.9	2.4	1.8	3.6	-0.3	56.01
		686	0.9	0.6	1.8	2.6	-1.1	42.53
		693	1.9	0.6	1.8	3.2	-0.7	34.88
		692	1.9	2.4	1.8	4.0	0.3	48.48

	NODE	Mxx	Myy	Mxy	Mmax	Mmin	ANGLE
	Cent	0.9	3.9	0.6	4.0	0.8	78.42
	685	0.7	4.2	0.4	4.3	0.7	84.26
	686	1.0	3.3	0.4	3.4	1.0	79.99
	693	1.8	2.6	1.0	3.3	1.1	56.40
	692	1.1	5.4	1.0	5.6	0.9	77.78

	NODE	Vxx	Vyy
	Cent	1.9	0.5
	685	0.8	2.0
	686	0.8	1.0
	693	3.0	1.0
	692	3.0	2.0

LC		NODE	Fxx	Fyy	Fxy	Fmax	Fmin	ANGLE
RC ENV~1	Max	Cent	1.3	2.0	1.6	3.3	0.2	50.61
		685	0.7	3.2	1.6	4.0	-0.0	63.94
		686	0.7	1.0	1.6	2.5	-0.0	47.31
		693	2.1	1.0	1.6	3.2	0.3	35.43
		692	2.1	3.2	1.6	4.3	0.9	54.65
	Min	Cent	-1.4	-0.8	-2.0	0.8	-3.1	84.98
		685	-1.1	-1.6	-2.0	0.7	-3.4	-41.90
		686	-1.1	-0.2	-2.0	0.5	-2.7	-79.77
		693	-1.8	-0.2	-2.0	0.5	-3.2	82.09
		692	-1.8	-1.6	-2.0	0.4	-3.7	-46.66

	NODE	Mxx	Myy	Mxy	Mmax	Mmin	ANGLE
Max	Cent	4.9	2.7	3.3	5.3	0.7	15.54

		685	4.3	1.3	3.0	4.5	-1.2	9.69
		686	5.9	2.1	2.7	6.0	1.6	9.17
		693	3.9	1.9	3.6	4.5	1.2	23.14
		692	5.6	5.5	3.8	7.5	1.5	62.56
	Min	Cent	-3.1	-5.1	1.2	-1.9	-6.3	31.80
		685	-2.6	-7.2	1.0	-1.7	-8.1	22.11
		686	-3.2	-4.5	0.8	-1.9	-5.9	35.40
		693	-5.4	-3.3	1.2	-2.5	-6.2	61.86
		692	-2.8	-5.4	1.5	-1.3	-6.3	25.04

	NODE	Vxx	Vyy
Max	Cent	4.6	-1.8
	685	2.0	-2.8
	686	2.0	-0.5
	693	7.3	-0.5
	692	7.3	-2.8
Min	Cent	-1.0	-5.2
	685	-2.5	-8.2
	686	-2.5	-2.6
	693	0.6	-2.6
	692	0.6	-8.2

LC		NODE	Fxx	Fyy	Fxy	Fmax	Fmin	ANGLE
RC ENV~2	Max	Cent	0.3	1.0	0.0	1.3	0.1	-65.64
		685	-0.0	1.5	0.0	1.6	-0.1	-74.59
		686	-0.0	0.7	0.0	0.9	-0.1	-65.30
		693	0.6	0.7	0.0	1.1	0.2	-47.28
		692	0.6	1.5	0.0	1.7	0.3	-65.97
	Min	Cent	-0.1	0.6	-0.6	0.6	-0.1	88.11
		685	-0.3	0.8	-0.6	0.8	-0.5	88.65
		686	-0.3	0.3	-0.6	0.4	-0.6	-78.56
		693	0.0	0.3	-0.6	0.4	-0.0	86.87
		692	0.0	0.8	-0.6	0.8	0.0	88.38

	NODE	Mxx	Myy	Mxy	Mmax	Mmin	ANGLE
Max	Cent	2.7	0.5	2.7	3.3	-0.1	22.36
	685	2.4	-1.0	2.6	2.7	-1.5	14.30
	686	3.3	0.9	2.3	3.6	0.5	16.04
	693	1.8	1.0	2.6	2.7	0.1	33.40
	692	3.3	1.4	2.9	4.2	0.5	27.06
Min	Cent	-2.2	-1.4	1.2	1.0	-4.5	49.15
	685	-1.9	-3.2	1.1	0.2	-5.1	38.67
	686	-2.2	-1.4	0.9	0.5	-4.1	49.29
	693	-3.7	-0.8	1.2	0.7	-5.2	59.06
	692	-1.2	-0.1	1.5	2.4	-3.6	50.77

	NODE	Vxx	Vyy
Max	Cent	3.0	-2.3
	685	1.4	-4.0
	686	1.4	-0.6
	693	4.7	-0.6
	692	4.7	-4.0
Min	Cent	-0.1	-4.0
	685	-1.4	-6.2
	686	-1.4	-1.8
	693	1.2	-1.8
	692	1.2	-6.2

ELEM	MAT	SEC	LC		NODE	Fxx	Fyy	Fxy	Fmax	Fmin	ANGLE
667	1	1	SX (RS)		Cent	0.2	0.1	1.0	1.2	-0.9	44.36
					686	0.2	0.2	1.0	1.2	-0.8	44.00
					687	0.2	0.2	1.0	1.2	-0.8	44.39
					694	0.3	0.2	1.0	1.3	-0.8	43.57
					693	0.3	0.2	1.0	1.2	-0.8	43.18

	NODE	Mxx	Myy	Mxy	Mmax	Mmin	ANGLE
	Cent	0.8	0.3	0.1	0.9	0.3	9.06
	686	0.7	0.3	0.2	0.7	0.3	20.27
	687	1.3	0.3	0.1	1.3	0.3	4.05
	694	1.3	0.4	0.0	1.3	0.3	2.08
	693	0.4	0.3	0.1	0.5	0.2	33.46

	NODE	Vxx	Vyy
	Cent	1.9	0.6
	686	1.7	0.8
	687	1.7	0.4
	694	2.1	0.4
	693	2.1	0.8

LC		NODE	Fxx	Fyy	Fxy	Fmax	Fmin	ANGLE
SY (RS)		Cent	1.2	0.5	1.3	2.2	-0.5	37.97
		686	1.0	0.6	1.3	2.1	-0.5	40.40
		687	1.0	0.5	1.3	2.0	-0.5	39.83
		694	1.4	0.5	1.3	2.3	-0.4	35.63
		693	1.4	0.6	1.3	2.3	-0.4	36.17

	NODE	Mxx	Myy	Mxy	Mmax	Mmin	ANGLE
	Cent	0.9	2.7	1.0	3.1	0.5	66.51
	686	0.7	3.4	0.7	3.6	0.5	75.38
	687	0.8	2.4	0.8	2.8	0.5	66.36
	694	0.9	2.3	1.1	2.9	0.3	60.20
	693	1.2	2.8	1.1	3.3	0.6	63.41

	NODE	Vxx	Vyy
	Cent	0.5	0.7
	686	0.1	1.0
	687	0.1	0.3
	694	1.1	0.3
	693	1.1	1.0

LC		NODE	Fxx	Fyy	Fxy	Fmax	Fmin	ANGLE
RC ENV~1	Max	Cent	1.2	0.9	1.3	2.3	0.3	41.78
		686	0.9	0.9	1.3	2.2	0.2	45.34
		687	0.9	0.8	1.3	2.1	0.2	44.08
		694	1.4	0.8	1.3	2.4	0.5	38.32
		693	1.4	0.9	1.3	2.5	0.5	39.53
	Min	Cent	-1.2	-0.2	-1.3	0.4	-2.0	-75.52
		686	-1.0	-0.2	-1.3	0.5	-1.9	-85.07
		687	-1.0	-0.2	-1.3	0.4	-1.9	-82.70
		694	-1.3	-0.2	-1.3	0.5	-2.1	-12.52
		693	-1.3	-0.2	-1.3	0.5	-2.1	-38.64

	NODE	Mxx	Myy	Mxy	Mmax	Mmin	ANGLE
Max	Cent	4.5	2.0	2.7	4.6	1.9	10.39
	686	4.6	2.0	2.7	4.7	1.5	6.08
	687	5.5	2.8	2.3	5.5	2.8	4.02
	694	4.3	1.8	2.8	4.3	1.7	7.99
	693	4.1	2.1	3.1	4.3	1.7	13.17
Min	Cent	-4.4	-3.7	0.4	-3.1	-5.1	56.95
	686	-3.6	-4.8	0.4	-2.9	-5.5	31.91
	687	-4.5	-3.1	-0.0	-2.8	-5.0	62.28
	694	-5.7	-3.3	0.2	-3.2	-6.2	77.77
	693	-4.6	-3.4	0.6	-2.9	-5.1	60.81

	NODE	Vxx	Vyy
Max	Cent	3.1	0.5
	686	2.4	-0.5
	687	2.4	1.5
	694	3.7	1.5
	693	3.7	-0.5
Min	Cent	-1.1	-1.4
	686	-1.5	-2.6
	687	-1.5	-0.3
	694	-0.7	-0.3
	693	-0.7	-2.6

LC		NODE	Fxx	Fyy	Fxy	Fmax	Fmin	ANGLE
RC ENV~2	Max	Cent	0.2	0.6	0.2	0.6	0.2	82.03
		686	0.1	0.7	0.2	0.7	0.1	84.02

	687	0.1	0.5	0.2	0.5	0.1	82.59
	694	0.3	0.5	0.2	0.6	0.3	-71.42
	693	0.3	0.7	0.2	0.7	0.3	81.39
Min	Cent	-0.0	0.3	-0.2	0.3	-0.0	-83.12
	686	-0.1	0.3	-0.2	0.4	-0.1	-86.68
	687	-0.1	0.3	-0.2	0.3	-0.1	-85.49
	694	0.1	0.3	-0.2	0.3	0.1	-88.55
	693	0.1	0.3	-0.2	0.4	0.1	-75.92

	NODE	Mxx	Myy	Mxy	Mmax	Mmin	ANGLE
Max	Cent	2.2	1.1	1.8	2.5	0.8	23.73
	686	2.4	0.8	1.9	2.6	0.5	17.38
	687	2.9	1.6	1.5	3.0	1.5	15.83
	694	1.9	0.9	1.6	2.1	0.7	23.19
	693	2.0	1.0	2.0	2.4	0.6	29.65
Min	Cent	-3.5	-1.1	0.5	-0.2	-4.4	62.17
	686	-2.9	-1.6	0.6	-0.2	-4.2	54.33
	687	-3.3	-0.9	0.2	-0.2	-4.0	64.60
	694	-4.5	-1.2	0.4	-0.5	-5.2	68.30
	693	-3.4	-0.8	0.8	0.3	-4.5	61.49

	NODE	Vxx	Vyy
Max	Cent	1.5	0.2
	686	1.0	-0.6
	687	1.0	1.0
	694	2.0	1.0
	693	2.0	-0.6
Min	Cent	-0.5	-0.8
	686	-0.8	-1.8
	687	-0.8	0.1
	694	-0.2	0.1
	693	-0.2	-1.8

ELEM	MAT	SEC	LC	NODE	Fxx	Fyy	Fxy	Fmax	Fmin	ANGLE
668	1	1	SX (RS)	Cent	0.6	0.2	0.9	1.3	-0.5	38.95
				687	0.5	0.2	0.9	1.2	-0.6	39.52
				688	0.5	0.3	0.9	1.3	-0.5	40.93
				695	0.7	0.3	0.9	1.4	-0.5	38.44
				694	0.7	0.2	0.9	1.3	-0.5	37.08

	NODE	Mxx	Myy	Mxy	Mmax	Mmin	ANGLE
	Cent	1.8	0.3	0.2	1.8	0.3	5.91
	687	1.4	0.3	0.1	1.4	0.3	5.89
	688	2.2	0.3	0.2	2.3	0.3	6.38
	695	2.3	0.5	0.2	2.3	0.4	6.11
	694	1.3	0.3	0.1	1.3	0.3	5.74

	NODE	Vxx	Vyy
	Cent	1.8	0.3
	687	1.7	0.4
	688	1.7	0.2
	695	1.8	0.2
	694	1.8	0.4

LC	NODE	Fxx	Fyy	Fxy	Fmax	Fmin	ANGLE
SY (RS)	Cent	1.0	0.4	1.2	1.9	-0.5	38.60
	687	0.8	0.5	1.2	1.8	-0.6	41.46
	688	0.8	0.5	1.2	1.8	-0.6	41.30
	695	1.2	0.5	1.2	2.0	-0.4	36.38
	694	1.2	0.5	1.2	2.0	-0.4	36.53

	NODE	Mxx	Myy	Mxy	Mmax	Mmin	ANGLE
	Cent	0.8	2.2	0.9	2.7	0.3	64.46
	687	0.7	2.5	0.9	2.8	0.3	68.19
	688	0.7	2.1	0.8	2.5	0.3	65.72
	695	0.8	2.1	1.0	2.6	0.3	60.76
	694	0.8	2.4	1.0	2.9	0.3	63.15

	NODE	Vxx	Vyy

		Cent	0.3	0.2
		687	0.3	0.3
		688	0.3	0.2
		695	0.4	0.2
		694	0.4	0.3

LC		NODE	Fxx	Fyy	Fxy	Fmax	Fmin	ANGLE
RC ENV~1	Max	Cent	1.0	0.7	1.3	2.2	0.2	41.78
		687	0.7	0.8	1.3	2.1	0.2	45.67
		688	0.7	0.7	1.3	2.0	0.1	44.66
		695	1.3	0.7	1.3	2.3	0.3	38.50
		694	1.3	0.8	1.3	2.4	0.4	39.47
	Min	Cent	-0.9	-0.2	-1.0	0.3	-1.6	70.66
		687	-0.8	-0.1	-1.0	0.3	-1.5	-83.25
		688	-0.8	-0.2	-1.0	0.3	-1.6	79.87
		695	-1.1	-0.2	-1.0	0.3	-1.7	-78.63
		694	-1.1	-0.1	-1.0	0.3	-1.7	-79.18

		NODE	Mxx	Myy	Mxy	Mmax	Mmin	ANGLE
	Max	Cent	5.2	2.6	1.9	5.2	2.5	-4.30
		687	5.0	2.7	1.9	5.1	2.7	-3.36
		688	6.2	3.4	1.5	6.3	3.4	-8.61
		695	5.3	2.3	1.8	5.3	2.3	-5.09
		694	4.2	1.8	2.2	4.2	1.8	0.49
	Min	Cent	-5.5	-3.0	-0.5	-3.0	-5.7	88.69
		687	-4.9	-3.3	-0.4	-3.2	-5.2	76.77
		688	-5.3	-2.4	-0.8	-2.4	-5.4	-85.76
		695	-6.3	-2.9	-0.6	-2.8	-6.4	-85.20
		694	-5.7	-3.4	-0.2	-3.4	-5.9	85.14

		NODE	Vxx	Vyy
	Max	Cent	1.1	1.7
		687	1.0	1.5
		688	1.0	1.9
		695	1.3	1.9
		694	1.3	1.5
	Min	Cent	-2.4	0.0
		687	-2.4	-0.3
		688	-2.4	0.3
		695	-2.4	0.3
		694	-2.4	-0.3

LC		NODE	Fxx	Fyy	Fxy	Fmax	Fmin	ANGLE
RC ENV~2	Max	Cent	0.4	0.5	0.3	0.7	0.2	55.72
		687	0.3	0.6	0.3	0.7	0.1	65.24
		688	0.3	0.4	0.3	0.6	0.1	49.67
		695	0.5	0.4	0.3	0.7	0.2	36.37
		694	0.5	0.6	0.3	0.8	0.2	52.63
	Min	Cent	-0.0	0.3	-0.0	0.3	-0.0	-86.72
		687	-0.1	0.3	-0.0	0.3	-0.1	-87.42
		688	-0.1	0.2	-0.0	0.2	-0.1	77.04
		695	0.1	0.2	-0.0	0.3	0.0	-85.48
		694	0.1	0.3	-0.0	0.3	0.1	-85.89

		NODE	Mxx	Myy	Mxy	Mmax	Mmin	ANGLE
	Max	Cent	2.6	1.5	1.0	2.6	1.5	2.52
		687	2.6	1.6	1.1	2.6	1.6	6.48
		688	3.4	2.1	0.7	3.4	2.1	-6.14
		695	2.6	1.3	0.8	2.6	1.3	-0.83
		694	1.9	0.9	1.2	1.9	0.9	12.92
	Min	Cent	-3.9	-0.9	-0.1	-0.6	-4.2	74.62
		687	-3.6	-0.9	-0.1	-0.6	-4.0	71.15
		688	-3.3	-0.5	-0.4	-0.3	-3.4	77.60
		695	-4.3	-0.9	-0.2	-0.8	-4.5	77.69
		694	-4.5	-1.2	0.1	-0.8	-4.9	72.72

		NODE	Vxx	Vyy
	Max	Cent	-0.1	1.1
		687	-0.1	1.0
		688	-0.1	1.3
		695	0.0	1.3

		694	0.0	1.0	
	Min	Cent	-1.3	0.3	
		687	-1.4	0.1	
		688	-1.4	0.5	
		695	-1.3	0.5	
		694	-1.3	0.1	

ELEM	MAT	SEC	LC		NODE	Fxx	Fyy	Fxy	Fmax	Fmin	ANGLE
669	1	1	SX (RS)		Cent	1.0	0.3	0.9	1.6	-0.3	33.25
					688	0.8	0.2	0.9	1.5	-0.4	35.28
					689	0.8	0.3	0.9	1.5	-0.3	37.42
					696	1.3	0.3	0.9	1.8	-0.2	31.41
					695	1.3	0.2	0.9	1.8	-0.3	29.61

		NODE	Mxx	Myy	Mxy	Mmax	Mmin	ANGLE
		Cent	2.7	0.4	0.4	2.8	0.4	8.69
		688	2.3	0.4	0.3	2.4	0.3	9.19
		689	3.2	0.4	0.4	3.2	0.3	8.55
		696	3.3	0.6	0.4	3.3	0.6	8.48
		695	2.3	0.5	0.3	2.3	0.4	9.03

	NODE	Vxx	Vyy
	Cent	1.6	0.3
	688	1.6	0.2
	689	1.6	0.4
	696	1.7	0.4
	695	1.7	0.2

LC		NODE	Fxx	Fyy	Fxy	Fmax	Fmin	ANGLE
SY (RS)		Cent	0.8	0.4	1.2	1.8	-0.6	40.37
		688	0.6	0.4	1.2	1.7	-0.7	43.17
		689	0.6	0.3	1.2	1.7	-0.7	41.86
		696	0.9	0.3	1.2	1.8	-0.6	38.06
		695	0.9	0.4	1.2	1.9	-0.5	39.32

	NODE	Mxx	Myy	Mxy	Mmax	Mmin	ANGLE
	Cent	0.7	2.1	0.8	2.5	0.3	64.78
	688	0.6	2.1	0.8	2.5	0.3	66.83
	689	0.6	2.1	0.8	2.5	0.3	67.42
	696	0.9	2.1	0.9	2.6	0.4	62.69
	695	0.8	2.1	0.9	2.6	0.3	62.34

	NODE	Vxx	Vyy
	Cent	0.2	0.1
	688	0.2	0.2
	689	0.2	0.1
	696	0.2	0.1
	695	0.2	0.2

LC		NODE	Fxx	Fyy	Fxy	Fmax	Fmin	ANGLE
RC ENV~1	Max	Cent	1.2	0.7	1.5	2.2	0.1	42.81
		688	0.9	0.7	1.5	2.1	-0.0	45.70
		689	0.9	0.7	1.5	2.1	0.0	45.03
		696	1.5	0.7	1.5	2.4	0.1	40.30
		695	1.5	0.7	1.5	2.4	0.1	40.95
	Min	Cent	-0.9	-0.1	-0.9	0.3	-1.3	-63.61
		688	-0.8	-0.2	-0.9	0.3	-1.3	80.17
		689	-0.8	-0.0	-0.9	0.3	-1.2	-60.60
		696	-1.1	-0.0	-0.9	0.2	-1.3	-64.75
		695	-1.1	-0.2	-0.9	0.3	-1.4	79.38

		NODE	Mxx	Myy	Mxy	Mmax	Mmin	ANGLE
	Max	Cent	6.5	3.1	1.1	6.7	2.9	-12.46
		688	6.1	3.4	1.2	6.2	3.3	-13.44
		689	7.7	3.6	0.8	7.9	3.4	-12.39
		696	7.2	3.1	1.0	7.4	3.0	-11.60
		695	5.1	2.2	1.3	5.2	2.1	-11.70
	Min	Cent	-5.7	-2.5	-1.2	-2.2	-5.7	-66.20

688	-5.5	-2.5	-1.1	-2.3	-5.5	-73.05
689	-5.0	-2.2	-1.4	-1.6	-5.0	-48.70
696	-5.7	-2.3	-1.3	-1.8	-5.7	-61.15
695	-6.5	-2.9	-1.0	-2.8	-6.5	-77.22

	NODE	Vxx	Vyy
Max	Cent	-1.0	1.4
	688	-0.8	1.9
	689	-0.8	1.0
	696	-1.2	1.0
	695	-1.2	1.9
Min	Cent	-4.3	-0.1
	688	-4.0	0.3
	689	-4.0	-0.6
	696	-4.6	-0.6
	695	-4.6	0.3

LC		NODE	Fxx	Fyy	Fxy	Fmax	Fmin	ANGLE
RC ENV~2	Max	Cent	0.6	0.4	0.5	1.0	0.0	37.35
		688	0.4	0.4	0.5	0.9	-0.0	43.29
		689	0.4	0.5	0.5	0.9	-0.0	42.15
		696	0.8	0.5	0.5	1.1	0.1	32.01
		695	0.8	0.4	0.5	1.1	0.1	32.95
	Min	Cent	-0.1	0.2	0.1	0.3	-0.2	77.30
		688	-0.2	0.2	0.1	0.3	-0.2	76.34
		689	-0.2	0.2	0.1	0.4	-0.2	79.14
		696	-0.1	0.2	0.1	0.4	-0.1	78.14
		695	-0.1	0.2	0.1	0.3	-0.1	74.78

	NODE	Mxx	Myy	Mxy	Mmax	Mmin	ANGLE
Max	Cent	3.6	1.9	0.2	3.7	1.8	-14.08
	688	3.3	2.1	0.4	3.4	2.0	-15.51
	689	4.5	2.3	0.0	4.7	2.1	-13.55
	696	4.1	2.0	0.1	4.2	1.8	-13.01
	695	2.5	1.3	0.4	2.5	1.2	-13.60
Min	Cent	-3.2	-0.5	-0.7	-0.5	-3.2	87.18
	688	-3.4	-0.5	-0.6	-0.5	-3.5	84.44
	689	-2.1	-0.2	-0.9	-0.2	-2.1	-87.95
	696	-2.8	-0.3	-0.8	-0.3	-2.8	-89.99
	695	-4.5	-1.0	-0.5	-0.9	-4.5	84.27

	NODE	Vxx	Vyy
Max	Cent	-1.8	1.0
	688	-1.6	1.3
	689	-1.6	0.6
	696	-2.1	0.6
	695	-2.1	1.3
Min	Cent	-2.9	0.1
	688	-2.6	0.5
	689	-2.6	-0.2
	696	-3.2	-0.2
	695	-3.2	0.5

ELEM	MAT	SEC	LC		NODE	Fxx	Fyy	Fxy	Fmax	Fmin	ANGLE
670	1	1	SX (RS)		Cent	1.5	0.4	1.1	2.2	-0.3	31.16
					689	1.1	0.3	1.1	1.8	-0.5	35.03
					690	1.1	0.5	1.1	1.9	-0.3	37.87
					697	2.0	0.5	1.1	2.6	-0.1	27.84
					696	2.0	0.3	1.1	2.5	-0.2	25.83

	NODE	Mxx	Myy	Mxy	Mmax	Mmin	ANGLE
	Cent	3.6	0.4	0.6	3.7	0.4	9.69
	689	3.3	0.4	0.6	3.4	0.3	10.51
	690	3.9	0.2	0.7	4.0	0.1	9.90
	697	4.2	0.6	0.6	4.3	0.5	9.00
	696	3.2	0.6	0.5	3.3	0.5	9.84

	NODE	Vxx	Vyy
	Cent	1.5	0.6
	689	1.2	0.4

	690	1.2	0.7	
	697	1.8	0.7	
	696	1.8	0.4	

LC		NODE	Fxx	Fyy	Fxy	Fmax	Fmin	ANGLE
SY (RS)		Cent	0.6	0.4	1.4	1.8	-0.9	42.97
		689	0.4	0.3	1.4	1.7	-1.0	44.29
		690	0.4	0.4	1.4	1.8	-0.9	45.21
		697	0.7	0.4	1.4	1.9	-0.8	41.74
		696	0.7	0.3	1.4	1.9	-0.8	40.84

	NODE	Mxx	Myy	Mxy	Mmax	Mmin	ANGLE
	Cent	0.6	2.3	0.8	2.6	0.3	68.85
	689	0.4	2.1	0.7	2.4	0.2	69.48
	690	0.6	2.5	0.7	2.8	0.4	73.00
	697	0.5	2.3	0.8	2.6	0.2	68.66
	696	0.7	2.1	0.9	2.5	0.3	64.21

	NODE	Vxx	Vyy
	Cent	0.2	0.3
	689	0.1	0.1
	690	0.1	0.4
	697	0.5	0.4
	696	0.5	0.1

LC		NODE	Fxx	Fyy	Fxy	Fmax	Fmin	ANGLE
RC ENV~1	Max	Cent	1.7	0.7	1.8	2.8	-0.1	35.70
		689	1.2	0.7	1.8	2.4	-0.1	39.47
		690	1.2	0.9	1.8	2.5	-0.1	41.91
		697	2.3	0.9	1.8	3.2	-0.0	32.31
		696	2.3	0.7	1.8	3.1	-0.0	30.34
	Min	Cent	-1.3	-0.1	-1.0	0.2	-1.6	-66.58
		689	-0.9	-0.0	-1.0	0.4	-1.3	-63.05
		690	-0.9	-0.2	-1.0	0.2	-1.3	-59.92
		697	-1.7	-0.2	-1.0	0.1	-2.0	-69.36
		696	-1.7	-0.0	-1.0	0.3	-1.9	-71.16

		NODE	Mxx	Myy	Mxy	Mmax	Mmin	ANGLE
	Max	Cent	8.7	3.6	0.4	8.9	3.3	-12.78
		689	7.9	3.7	0.5	8.1	3.4	-13.82
		690	9.7	3.4	0.2	9.9	3.1	-10.45
		697	10.1	4.1	0.4	10.3	3.9	-11.56
		696	7.0	3.1	0.6	7.3	2.8	-15.26
	Min	Cent	-4.5	-2.1	-1.7	-0.6	-4.7	-36.41
		689	-5.0	-2.2	-1.6	-1.2	-5.1	-45.00
		690	-3.5	-2.5	-1.8	0.2	-3.8	-73.08
		697	-3.7	-1.5	-1.8	0.4	-4.0	-76.07
		696	-5.8	-2.3	-1.6	-1.5	-5.9	-56.81

		NODE	Vxx	Vyy
	Max	Cent	-2.9	0.1
		689	-2.5	1.0
		690	-2.5	-0.7
		697	-3.3	-0.7
		696	-3.3	1.0
	Min	Cent	-5.9	-1.4
		689	-5.0	-0.6
		690	-5.0	-2.3
		697	-6.8	-2.3
		696	-6.8	-0.6

LC		NODE	Fxx	Fyy	Fxy	Fmax	Fmin	ANGLE
RC ENV~2	Max	Cent	0.9	0.5	0.8	1.5	-0.1	35.03
		689	0.6	0.5	0.8	1.3	-0.1	40.92
		690	0.6	0.6	0.8	1.3	-0.1	39.25
		697	1.2	0.6	0.8	1.7	-0.0	29.89
		696	1.2	0.5	0.8	1.7	-0.0	31.22
	Min	Cent	-0.2	0.2	0.1	0.4	-0.3	79.22
		689	-0.2	0.3	0.1	0.3	-0.3	76.63

690	-0.2	0.2	0.1	0.5	-0.4	79.14
697	-0.3	0.2	0.1	0.5	-0.3	81.00
696	-0.3	0.3	0.1	0.3	-0.3	79.31

	NODE	Mxx	Myy	Mxy	Mmax	Mmin	ANGLE
Max	Cent	5.3	2.3	-0.4	5.6	2.1	-14.23
	689	4.7	2.3	-0.2	4.9	2.1	-15.84
	690	6.2	2.2	-0.4	6.4	1.9	-11.09
	697	6.5	2.8	-0.4	6.7	2.6	-12.60
	696	4.0	1.9	-0.2	4.3	1.7	-18.34
Min	Cent	-1.2	0.0	-1.2	0.2	-1.3	-70.55
	689	-2.0	-0.2	-1.1	-0.1	-2.1	-79.55
	690	0.1	-0.1	-1.2	0.6	-0.6	-39.60
	697	0.1	0.7	-1.2	1.0	-0.2	-57.90
	696	-2.9	-0.3	-1.1	-0.3	-2.9	-82.48

	NODE	Vxx	Vyy
Max	Cent	-2.8	-0.1
	689	-2.3	0.6
	690	-2.3	-0.8
	697	-3.4	-0.8
	696	-3.4	0.6
Min	Cent	-4.6	-0.9
	689	-4.0	-0.2
	690	-4.0	-1.8
	697	-5.3	-1.8
	696	-5.3	-0.2

ELEM	MAT	SEC	LC	NODE	Fxx	Fyy	Fxy	Fmax	Fmin	ANGLE
671	1	1	SX (RS)	Cent	1.8	0.2	1.7	2.9	-0.8	32.03
				690	0.7	0.5	1.7	2.2	-1.1	42.85
				691	0.7	0.5	1.7	2.2	-1.1	43.00
				698	3.0	0.5	1.7	3.8	-0.3	26.32
				697	3.0	0.5	1.7	3.8	-0.4	26.22

	NODE	Mxx	Myy	Mxy	Mmax	Mmin	ANGLE
	Cent	4.4	0.5	1.0	4.6	0.3	13.15
	690	4.0	0.2	0.8	4.2	0.0	11.69
	691	3.6	0.4	1.2	4.0	0.0	18.49
	698	5.5	1.5	1.2	5.9	1.2	15.08
	697	4.4	0.7	0.8	4.5	0.5	11.54

	NODE	Vxx	Vyy
	Cent	0.7	1.8
	690	0.5	0.7
	691	0.5	2.9
	698	1.8	2.9
	697	1.8	0.7

LC	NODE	Fxx	Fyy	Fxy	Fmax	Fmin	ANGLE
SY (RS)	Cent	0.4	0.9	1.9	2.5	-1.2	49.37
	690	0.5	0.4	1.9	2.3	-1.4	44.85
	691	0.5	1.7	1.9	3.1	-0.9	54.47
	698	0.5	1.7	1.9	3.1	-0.9	54.20
	697	0.5	0.4	1.9	2.3	-1.4	44.55

	NODE	Mxx	Myy	Mxy	Mmax	Mmin	ANGLE
	Cent	0.6	2.9	0.6	3.0	0.5	76.04
	690	0.4	2.5	0.5	2.6	0.2	76.93
	691	0.6	3.0	0.5	3.1	0.6	79.24
	698	1.3	3.7	0.7	3.9	1.1	74.23
	697	0.5	2.2	0.8	2.5	0.2	69.56

	NODE	Vxx	Vyy
	Cent	1.1	0.4
	690	0.5	0.4
	691	0.5	1.2
	698	1.7	1.2
	697	1.7	0.4

LC		NODE	Fxx	Fyy	Fxy	Fmax	Fmin	ANGLE
RC ENV~1	Max	Cent	2.1	1.7	2.5	4.0	-0.1	38.09
		690	0.7	0.8	2.5	3.2	-0.3	47.08
		691	0.7	2.9	2.5	4.5	-0.2	57.74
		698	3.6	2.9	2.5	5.1	0.5	33.44
		697	3.6	0.8	2.5	4.9	-0.1	29.68
	Min	Cent	-1.6	-0.2	-1.2	0.9	-2.0	85.80
		690	-0.7	-0.1	-1.2	0.6	-1.9	83.48
		691	-0.7	-0.6	-1.2	0.6	-1.7	-43.34
		698	-2.4	-0.6	-1.2	0.9	-2.7	-73.74
		697	-2.4	-0.1	-1.2	0.3	-2.8	-70.00

		NODE	Mxx	Myy	Mxy	Mmax	Mmin	ANGLE
	Max	Cent	11.1	3.8	0.3	11.4	3.6	-9.59
		690	10.2	3.5	0.3	10.4	3.2	-9.78
		691	11.4	3.0	0.6	11.7	3.0	-8.67
		698	13.1	5.5	0.5	13.4	5.1	-11.34
		697	9.8	4.1	0.2	10.1	3.8	-12.61
	Min	Cent	-2.4	-2.2	-2.2	0.9	-3.2	-64.68
		690	-3.4	-2.5	-2.0	0.3	-3.9	-69.94
		691	-0.5	-3.0	-2.2	1.3	-3.2	-45.47
		698	-1.8	-1.9	-2.4	1.3	-2.8	-59.92
		697	-4.1	-1.5	-2.1	0.5	-4.5	-73.34

		NODE	Vxx	Vyy
	Max	Cent	-3.4	-0.5
		690	-2.6	-0.7
		691	-2.6	-0.3
		698	-4.0	-0.3
		697	-4.0	-0.7
	Min	Cent	-6.3	-4.2
		690	-5.1	-2.3
		691	-5.1	-6.3
		698	-7.7	-6.3
		697	-7.7	-2.3

LC		NODE	Fxx	Fyy	Fxy	Fmax	Fmin	ANGLE
RC ENV~2	Max	Cent	1.1	1.1	1.4	2.4	-0.1	42.95
		690	0.3	0.6	1.4	1.7	-0.2	45.53
		691	0.3	1.8	1.4	2.6	-0.2	60.14
		698	2.0	1.8	1.4	3.2	0.3	40.39
		697	2.0	0.6	1.4	2.8	-0.1	29.71
	Min	Cent	-0.3	0.7	0.2	0.7	-0.4	81.05
		690	-0.2	0.2	0.2	0.5	-1.1	76.83
		691	-0.2	0.9	0.2	0.9	-0.7	82.25
		698	-0.4	0.9	0.2	0.9	-0.4	83.26
		697	-0.4	0.2	0.2	0.5	-0.5	79.44

		NODE	Mxx	Myy	Mxy	Mmax	Mmin	ANGLE
	Max	Cent	7.4	2.5	-0.6	7.6	2.3	-10.17
		690	6.6	2.2	-0.5	6.7	2.0	-10.54
		691	7.8	1.9	-0.5	8.0	1.6	-8.78
		698	9.0	3.7	-0.6	9.2	3.6	-11.65
		697	6.3	2.7	-0.6	6.5	2.5	-14.04
	Min	Cent	1.6	0.5	-1.5	2.0	0.1	-26.04
		690	0.3	-0.1	-1.4	0.8	-0.6	-37.70
		691	2.9	-0.2	-1.5	3.0	-0.3	-12.34
		698	3.4	1.6	-1.6	3.6	1.2	-19.65
		697	-0.1	0.6	-1.5	1.1	-0.5	-58.14

		NODE	Vxx	Vyy
	Max	Cent	-3.1	-1.4
		690	-2.5	-0.8
		691	-2.5	-2.0
		698	-3.6	-2.0
		697	-3.6	-0.8
	Min	Cent	-5.4	-3.2
		690	-4.7	-1.8
		691	-4.7	-4.6
		698	-6.2	-4.6

		697	-6.2	-1.8	

ELEM	MAT	SEC	LC		NODE	Fxx	Fyy	Fxy	Fmax	Fmin	ANGLE
672	1	1	SX	(RS)	Cent	0.6	0.4	1.3	1.8	-0.8	42.41
					691	1.1	0.3	1.3	2.0	-0.7	36.42
					243	1.1	0.8	1.3	2.3	-0.3	42.05
					246	0.2	0.8	1.3	1.8	-0.8	51.74
					698	0.2	0.3	1.3	1.5	-1.1	45.99

	NODE	Mxx	Myy	Mxy	Mmax	Mmin	ANGLE
	Cent	2.4	0.3	1.7	3.4	-0.7	29.41
	691	3.4	0.5	2.0	4.3	-0.5	26.88
	243	3.3	0.8	1.2	3.8	0.3	22.49
	246	3.7	1.4	1.2	4.2	0.9	23.51
	698	5.9	1.6	2.0	6.7	0.8	21.09

	NODE	Vxx	Vyy
	Cent	8.1	0.7
	691	0.6	2.9
	243	0.6	1.6
	246	15.7	1.6
	698	15.7	2.9

LC		NODE	Fxx	Fyy	Fxy	Fmax	Fmin	ANGLE
SY	(RS)	Cent	0.9	2.4	1.5	3.3	-0.0	58.78
		691	0.5	1.6	1.5	2.6	-0.5	55.40
		243	0.5	3.2	1.5	3.8	-0.2	66.14
		246	1.2	3.2	1.5	3.9	0.4	61.72
		698	1.2	1.6	1.5	2.9	-0.1	48.74

	NODE	Mxx	Myy	Mxy	Mmax	Mmin	ANGLE
	Cent	0.8	3.5	0.3	3.5	0.8	83.57
	691	0.8	3.0	0.3	3.1	0.7	81.89
	243	0.8	2.7	0.3	2.7	0.7	81.72
	246	2.2	4.9	0.4	4.9	2.2	82.15
	698	0.7	3.4	0.4	3.4	0.6	81.20

	NODE	Vxx	Vyy
	Cent	2.3	2.5
	691	0.2	1.2
	243	0.2	3.8
	246	4.5	3.8
	698	4.5	1.2

LC		NODE	Fxx	Fyy	Fxy	Fmax	Fmin	ANGLE
RC ENV~1	Max	Cent	0.7	3.7	2.0	4.7	-0.2	63.68
		691	1.1	2.6	2.0	3.8	-0.1	59.43
		243	1.1	4.7	2.0	5.5	-0.1	68.71
		246	0.9	4.7	2.0	5.6	0.1	67.12
		698	0.9	2.6	2.0	3.9	-0.3	56.79
	Min	Cent	-1.0	-1.1	-1.0	-0.1	-2.0	-44.11
		691	-1.1	-0.6	-1.0	0.4	-1.5	-44.08
		243	-1.1	-1.6	-1.0	0.1	-2.1	-30.70
		246	-1.5	-1.6	-1.0	-0.6	-2.5	-44.29
		698	-1.5	-0.6	-1.0	0.0	-2.1	-58.01

		NODE	Mxx	Myy	Mxy	Mmax	Mmin	ANGLE
	Max	Cent	13.1	4.7	1.4	13.1	4.7	-4.45
		691	11.7	3.0	1.5	11.8	3.0	-5.54
		243	12.4	3.2	1.1	12.4	3.2	-1.89
		246	15.8	7.2	1.0	15.9	7.2	-5.96
		698	14.1	5.5	1.5	14.2	5.4	-7.67
	Min	Cent	2.8	-2.3	-2.0	4.1	-2.4	-32.59
		691	-0.2	-3.0	-2.4	2.1	-3.1	-43.30
		243	2.9	-2.1	-1.3	3.4	-2.2	-20.38
		246	3.6	-2.6	-1.4	4.2	-2.6	-22.54
		698	-1.7	-1.5	-2.5	1.9	-3.4	-56.24

	NODE	Vxx	Vyy
Max	Cent	2.9	-0.5
	691	-1.1	-0.3
	243	-1.1	0.9
	246	10.4	0.9
	698	10.4	-0.3
Min	Cent	-13.4	-5.6
	691	-5.7	-6.3
	243	-5.7	-6.7
	246	-21.1	-6.7
	698	-21.1	-6.3

LC		NODE	Fxx	Fyy	Fxy	Fmax	Fmin	ANGLE
RC ENV~2	Max	Cent	0.1	2.0	1.1	2.3	-0.2	66.22
		691	0.4	1.6	1.1	2.1	-0.1	61.06
		243	0.4	2.6	1.1	2.7	-0.1	79.83
		246	-0.2	2.6	1.1	2.6	-0.2	80.51
		698	-0.2	1.6	1.1	2.0	-0.3	66.64
	Min	Cent	-0.3	1.1	0.1	1.3	-0.5	80.33
		691	-0.3	0.9	0.1	0.9	-0.4	86.98
		243	-0.3	1.1	0.1	1.6	-0.4	70.52
		246	-0.4	1.1	0.1	1.5	-0.8	65.30
		698	-0.4	0.9	0.1	0.9	-0.8	86.80

	NODE	Mxx	Myy	Mxy	Mmax	Mmin	ANGLE
Max	Cent	9.2	2.7	0.0	9.2	2.5	-4.39
	691	8.0	1.9	-0.0	8.1	1.7	-5.65
	243	9.0	1.5	0.1	9.0	1.5	-1.81
	246	11.3	4.0	0.0	11.4	4.0	-5.62
	698	9.7	3.8	-0.2	9.8	3.8	-7.84
Min	Cent	5.0	1.0	-1.3	5.1	1.0	-5.85
	691	3.0	-0.2	-1.5	3.1	-0.3	-10.44
	243	5.9	0.2	-0.8	5.9	0.1	-1.85
	246	7.1	2.1	-0.9	7.1	2.1	-1.26
	698	3.8	1.7	-1.7	3.9	1.4	-15.37

	NODE	Vxx	Vyy
Max	Cent	-1.1	-2.7
	691	-1.6	-2.0
	243	-1.6	-2.8
	246	0.7	-2.8
	698	0.7	-2.0
Min	Cent	-6.7	-4.0
	691	-5.2	-4.6
	243	-5.2	-4.0
	246	-9.9	-4.0
	698	-9.9	-4.6

ELEM	MAT	SEC	LC		NODE	Fxx	Fyy	Fxy	Fmax	Fmin	ANGLE
673	1	1	SX (RS)		Cent	2.6	0.1	2.4	4.0	-1.3	31.25
					656	0.7	0.5	2.4	3.0	-1.8	43.71
					692	0.7	0.3	2.4	2.9	-1.9	42.67
					73	5.8	0.3	2.4	6.7	-0.5	20.38
					15	5.8	0.5	2.4	6.7	-0.4	20.84

	NODE	Mxx	Myy	Mxy	Mmax	Mmin	ANGLE
	Cent	4.6	1.2	1.4	5.1	0.6	20.11
	656	3.4	0.7	4.1	6.4	-2.3	35.95
	692	1.7	0.3	0.5	1.8	0.2	18.68
	73	2.1	2.0	0.6	2.7	1.4	43.00
	15	17.9	3.6	4.0	18.9	2.6	14.46

	NODE	Vxx	Vyy
	Cent	9.4	2.2
	656	8.9	0.0
	692	8.9	4.3
	73	27.7	4.3
	15	27.7	0.0

LC		NODE	Fxx	Fyy	Fxy	Fmax	Fmin	ANGLE
SY (RS)		Cent	1.9	5.8	3.4	7.8	-0.1	60.13
		656	1.4	12.1	3.4	13.1	0.4	73.84
		692	1.4	0.7	3.4	4.5	-2.4	42.19
		73	2.6	0.7	3.4	5.2	-1.9	37.27
		15	2.6	12.1	3.4	13.2	1.5	72.26

	NODE	Mxx	Myy	Mxy	Mmax	Mmin	ANGLE
	Cent	0.9	10.7	3.4	11.8	-0.1	72.56
	656	2.9	9.1	0.8	9.2	2.8	82.53
	692	2.7	4.9	0.1	4.9	2.7	87.36
	73	2.7	6.5	8.6	13.4	-4.1	51.30
	15	2.3	35.4	7.8	37.1	0.6	77.44

	NODE	Vxx	Vyy
	Cent	0.8	14.4
	656	8.2	50.7
	692	8.2	22.0
	73	6.8	22.0
	15	6.8	50.7

LC		NODE	Fxx	Fyy	Fxy	Fmax	Fmin	ANGLE
RC ENV~1	Max	Cent	2.6	7.2	2.8	8.4	0.7	66.99
		656	1.2	14.7	2.8	15.3	0.6	78.94
		692	1.2	0.8	2.8	3.8	-0.0	43.31
		73	6.1	0.8	2.8	6.5	-0.0	15.80
		15	6.1	14.7	2.8	15.3	2.3	77.57
	Min	Cent	-2.5	-4.5	-4.0	1.1	-7.4	-36.03
		656	-1.6	-9.5	-4.0	0.1	-11.2	-22.75
		692	-1.6	-0.6	-4.0	0.3	-5.2	-73.45
		73	-5.6	-0.6	-4.0	0.3	-6.9	-87.01
		15	-5.6	-9.5	-4.0	-0.5	-11.4	-24.19

		NODE	Mxx	Myy	Mxy	Mmax	Mmin	ANGLE
	Max	Cent	8.5	13.5	7.0	17.0	3.6	63.61
		656	5.4	5.8	7.0	8.5	0.9	53.04
		692	7.6	6.1	4.0	8.8	2.2	24.89
		73	1.4	10.0	12.2	17.8	0.1	57.58
		15	28.9	45.4	10.8	48.7	14.2	73.00
	Min	Cent	-2.6	-7.9	0.2	1.0	-7.9	1.34
		656	-2.7	-12.4	-1.3	-1.9	-12.8	-31.52
		692	-2.6	-3.8	2.2	0.2	-6.6	39.80
		73	-6.9	-3.0	-4.9	0.3	-10.2	-55.78
		15	-6.9	-25.4	-4.7	6.5	-26.0	-86.10

		NODE	Vxx	Vyy
	Max	Cent	23.2	0.5
		656	11.5	29.1
		692	11.5	15.8
		73	52.7	15.8
		15	52.7	29.1
	Min	Cent	4.4	-28.3
		656	-6.3	-72.3
		692	-6.3	-28.2
		73	-2.8	-28.2
		15	-2.8	-72.3

LC		NODE	Fxx	Fyy	Fxy	Fmax	Fmin	ANGLE
RC ENV~2	Max	Cent	1.0	2.4	-0.2	3.2	0.0	-59.50
		656	-0.0	4.5	-0.2	4.9	-0.1	-74.23
		692	-0.0	0.3	-0.2	1.4	-0.1	-49.98
		73	2.3	0.3	-0.2	3.0	-0.3	-26.27
		15	2.3	4.5	-0.2	5.1	1.3	-66.51
	Min	Cent	-0.6	1.3	-1.5	1.4	-0.7	-85.70
		656	-0.4	2.5	-1.5	2.6	-0.8	-86.76
		692	-0.4	0.0	-1.5	0.3	-1.6	-65.86
		73	-1.1	0.0	-1.5	0.2	-1.2	-83.66
		15	-1.1	2.5	-1.5	2.6	-1.1	-87.68

	NODE	Mxx	Myy	Mxy	Mmax	Mmin	ANGLE

Max	Cent	5.8	3.7	3.8	7.8	2.2	34.28
	656	3.6	-2.3	3.6	4.8	-2.9	23.72
	692	4.9	2.5	3.6	6.2	1.0	29.75
	73	0.2	5.1	4.0	7.0	-1.0	64.46
	15	17.9	10.9	4.0	18.3	10.6	12.70
Min	Cent	1.7	2.7	2.1	5.8	-1.5	49.92
	656	0.5	-4.7	1.0	1.0	-5.4	13.29
	692	0.0	1.1	2.0	4.1	-2.9	49.68
	73	-4.3	3.2	2.1	4.2	-5.8	68.98
	15	5.6	9.0	1.3	11.4	3.4	58.48

	NODE	Vxx	Vyy
Max	Cent	15.6	-12.5
	656	3.5	-20.8
	692	3.5	-4.0
	73	32.2	-4.0
	15	32.2	-20.8
Min	Cent	6.9	-15.8
	656	-2.4	-22.7
	692	-2.4	-9.0
	73	12.7	-9.0
	15	12.7	-22.7

ELEM	MAT	SEC	LC	NODE	Fxx	Fyy	Fxy	Fmax	Fmin	ANGLE
674	1	1	SX (RS)	Cent	1.0	0.4	1.1	1.8	-0.4	36.90
				692	0.7	0.6	1.1	1.8	-0.4	43.86
				693	0.7	0.2	1.1	1.5	-0.7	37.49
				74	1.3	0.2	1.1	1.9	-0.5	31.02
				73	1.3	0.6	1.1	2.1	-0.2	36.58

	NODE	Mxx	Myy	Mxy	Mmax	Mmin	ANGLE
	Cent	0.9	0.7	0.2	1.0	0.6	30.83
	692	1.4	0.4	0.2	1.5	0.3	12.19
	693	0.4	0.5	0.2	0.6	0.3	49.40
	74	0.4	0.6	0.1	0.6	0.3	57.02
	73	2.2	2.0	0.2	2.3	1.9	35.21

	NODE	Vxx	Vyy
	Cent	3.3	2.3
	692	2.6	4.3
	693	2.6	0.3
	74	4.0	0.3
	73	4.0	4.3

LC	NODE	Fxx	Fyy	Fxy	Fmax	Fmin	ANGLE
SY (RS)	Cent	1.8	0.5	1.3	2.6	-0.3	31.27
	692	1.8	0.7	1.3	2.6	-0.2	33.58
	693	1.8	0.9	1.3	2.7	-0.0	36.06
	74	2.0	0.9	1.3	2.9	0.1	33.80
	73	2.0	0.7	1.3	2.8	-0.1	31.47

	NODE	Mxx	Myy	Mxy	Mmax	Mmin	ANGLE
	Cent	1.4	1.2	1.7	3.0	-0.3	43.27
	692	1.1	5.6	2.0	6.4	0.4	69.05
	693	1.8	2.5	2.1	4.3	0.0	50.02
	74	1.1	3.0	0.9	3.4	0.8	69.07
	73	3.4	6.7	0.8	6.9	3.2	77.18

	NODE	Vxx	Vyy
	Cent	0.5	10.7
	692	3.0	22.0
	693	3.0	0.5
	74	2.1	0.5
	73	2.1	22.0

LC		NODE	Fxx	Fyy	Fxy	Fmax	Fmin	ANGLE
RC ENV~1	Max	Cent	1.9	0.8	1.1	2.6	0.2	31.65

		692	1.8	0.8	1.1	2.6	0.2	32.86
		693	1.8	1.3	1.1	2.7	0.4	38.28
		74	2.0	1.3	1.1	2.9	0.5	36.12
		73	2.0	0.8	1.1	2.7	0.2	30.97
	Min	Cent	-1.8	-0.3	-1.4	0.4	-2.7	-72.04
		692	-1.7	-0.5	-1.4	0.3	-2.7	-49.71
		693	-1.7	-0.6	-1.4	0.4	-2.7	-55.61
		74	-2.0	-0.6	-1.4	0.3	-2.9	-57.92
		73	-2.0	-0.5	-1.4	0.3	-2.9	-61.64

		NODE	Mxx	Myy	Mxy	Mmax	Mmin	ANGLE
	Max	Cent	4.6	3.7	4.0	5.3	2.9	33.08
		692	5.8	6.5	4.8	9.2	2.2	61.56
		693	4.1	2.3	4.5	5.2	1.7	57.14
		74	2.8	3.3	2.6	4.2	2.2	71.48
		73	6.0	10.9	2.9	11.8	5.7	72.59
	Min	Cent	-3.9	0.1	0.7	0.2	-4.3	80.93
		692	-2.3	-4.7	0.8	-1.8	-4.9	16.13
		693	-5.3	-2.7	0.4	-2.7	-5.4	82.31
		74	-5.7	-2.8	0.2	-2.5	-5.9	75.22
		73	-4.3	-2.5	0.7	-1.8	-5.0	61.84

		NODE	Vxx	Vyy
	Max	Cent	8.1	7.0
		692	7.3	15.8
		693	7.3	-0.3
		74	9.2	-0.3
		73	9.2	15.8
	Min	Cent	0.8	-14.5
		692	0.6	-28.2
		693	0.6	-1.9
		74	0.9	-1.9
		73	0.9	-28.2

LC		NODE	Fxx	Fyy	Fxy	Fmax	Fmin	ANGLE
RC ENV~2	Max	Cent	0.5	0.5	0.0	0.8	0.1	-33.80
		692	0.5	0.4	0.0	0.7	0.1	-29.31
		693	0.5	0.7	0.0	0.9	0.2	-52.33
		74	0.6	0.7	0.0	0.9	0.2	-38.94
		73	0.6	0.4	0.0	0.8	0.1	-26.34
	Min	Cent	-0.1	0.1	-0.4	0.3	-0.1	-71.13
		692	-0.0	-0.1	-0.4	0.2	-0.3	-61.61
		693	-0.0	0.3	-0.4	0.4	-0.0	-75.70
		74	-0.2	0.3	-0.4	0.4	-0.2	-77.98
		73	-0.2	-0.1	-0.4	0.2	-0.2	-67.01

		NODE	Mxx	Myy	Mxy	Mmax	Mmin	ANGLE
	Max	Cent	2.5	2.5	2.4	3.6	1.4	45.43
		692	3.5	2.3	2.9	4.6	1.0	31.91
		693	1.9	1.4	2.5	2.9	0.5	36.85
		74	0.9	1.5	1.7	1.8	0.6	62.41
		73	3.7	5.9	2.1	6.5	3.3	69.03
	Min	Cent	-2.5	1.2	1.0	2.4	-3.6	64.65
		692	-1.0	0.8	1.5	3.0	-3.0	54.58
		693	-3.6	-0.3	1.2	1.0	-4.9	61.44
		74	-4.6	0.2	0.5	0.7	-5.2	72.24
		73	-1.0	3.8	0.8	4.3	-1.8	70.03

		NODE	Vxx	Vyy
	Max	Cent	5.2	-2.2
		692	4.7	-4.0
		693	4.7	-0.4
		74	5.8	-0.4
		73	5.8	-4.0
	Min	Cent	1.3	-5.2
		692	1.2	-9.0
		693	1.2	-1.4
		74	1.5	-1.4
		73	1.5	-9.0

ELEM	MAT	SEC	LC		NODE	Fxx	Fyy	Fxy	Fmax	Fmin	ANGLE

675	1	1	SX (RS)	Cent	0.4	0.2	0.8	1.1	-0.5	41.78
				693	0.3	0.3	0.8	1.1	-0.5	45.39
				694	0.3	0.1	0.8	1.0	-0.6	42.26
				75	0.5	0.1	0.8	1.1	-0.5	39.14
				74	0.5	0.3	0.8	1.2	-0.4	42.21

	NODE	Mxx	Myy	Mxy	Mmax	Mmin	ANGLE
	Cent	0.7	0.3	0.1	0.7	0.3	10.80
	693	0.5	0.5	0.1	0.6	0.4	44.51
	694	1.3	0.2	0.0	1.3	0.2	2.21
	75	1.3	0.3	0.1	1.3	0.3	6.56
	74	0.3	0.6	0.1	0.6	0.3	71.79

	NODE	Vxx	Vyy
	Cent	2.1	0.3
	693	2.1	0.3
	694	2.1	0.3
	75	2.1	0.3
	74	2.1	0.3

LC		NODE	Fxx	Fyy	Fxy	Fmax	Fmin	ANGLE
SY (RS)		Cent	1.6	0.6	1.1	2.4	-0.1	32.31
		693	1.4	0.9	1.1	2.3	-0.0	38.89
		694	1.4	0.5	1.1	2.1	-0.3	34.03
		75	1.9	0.5	1.1	2.5	-0.1	28.79
		74	1.9	0.9	1.1	2.6	0.2	32.90

	NODE	Mxx	Myy	Mxy	Mmax	Mmin	ANGLE
	Cent	1.0	2.3	1.6	3.4	-0.1	55.72
	693	1.2	2.7	1.5	3.6	0.3	58.31
	694	0.9	2.1	1.3	2.9	0.1	57.08
	75	1.1	1.4	1.8	3.0	-0.5	47.51
	74	1.1	3.0	2.0	4.3	-0.1	57.94

	NODE	Vxx	Vyy
	Cent	1.3	0.6
	693	1.1	0.5
	694	1.1	1.6
	75	1.5	1.6
	74	1.5	0.5

LC		NODE	Fxx	Fyy	Fxy	Fmax	Fmin	ANGLE
RC ENV~1	Max	Cent	1.7	0.8	1.1	2.4	0.5	33.98
		693	1.4	1.3	1.1	2.4	0.4	42.85
		694	1.4	0.6	1.1	2.2	0.3	35.05
		75	2.0	0.6	1.1	2.6	0.4	28.82
		74	2.0	1.3	1.1	2.8	0.6	35.44
	Min	Cent	-1.6	-0.3	-1.2	0.4	-2.3	-59.13
		693	-1.3	-0.5	-1.2	0.3	-2.2	-54.54
		694	-1.3	-0.3	-1.2	0.4	-2.1	42.79
		75	-1.8	-0.3	-1.2	0.3	-2.4	-61.25
		74	-1.8	-0.5	-1.2	0.2	-2.5	-59.25

		NODE	Mxx	Myy	Mxy	Mmax	Mmin	ANGLE
	Max	Cent	3.9	2.2	3.3	4.0	2.1	13.36
		693	4.2	2.5	3.4	4.4	2.2	14.19
		694	4.4	2.2	2.9	4.4	2.2	10.14
		75	3.6	1.6	3.2	3.6	1.6	7.56
		74	3.8	3.5	3.7	5.3	2.4	64.56
	Min	Cent	-5.1	-2.4	0.1	-2.4	-5.4	88.34
		693	-4.5	-2.8	0.4	-2.7	-4.6	77.09
		694	-5.6	-2.6	0.3	-2.5	-6.0	83.02
		75	-6.4	-1.8	-0.3	-1.7	-6.7	-86.01
		74	-4.8	-2.5	-0.2	-2.5	-4.8	-83.89

		NODE	Vxx	Vyy
	Max	Cent	4.1	0.3
		693	3.7	-0.3
		694	3.7	1.1

		75	4.4	1.1
		74	4.4	-0.3
	Min	Cent	-0.3	-1.5
		693	-0.7	-1.9
		694	-0.7	-2.1
		75	-0.0	-2.1
		74	-0.0	-1.9

LC		NODE	Fxx	Fyy	Fxy	Fmax	Fmin	ANGLE
RC ENV~2	Max	Cent	0.4	0.5	0.1	0.5	0.3	-57.37
		693	0.3	0.7	0.1	0.7	0.3	-87.71
		694	0.3	0.3	0.1	0.4	0.2	-36.42
		75	0.4	0.3	0.1	0.5	0.3	-26.19
		74	0.4	0.7	0.1	0.7	0.4	-86.72
	Min	Cent	0.1	0.2	-0.2	0.3	0.0	-76.24
		693	0.0	0.2	-0.2	0.4	0.0	-76.38
		694	0.0	0.1	-0.2	0.2	-0.0	-79.53
		75	0.1	0.1	-0.2	0.2	0.0	-72.53
		74	0.1	0.2	-0.2	0.4	0.1	-73.74

		NODE	Mxx	Myy	Mxy	Mmax	Mmin	ANGLE
	Max	Cent	1.7	1.4	1.7	2.1	0.9	34.62
		693	2.1	1.5	1.9	2.5	1.0	33.82
		694	2.0	1.3	1.6	2.3	1.0	28.81
		75	1.3	1.0	1.5	1.6	0.7	32.56
		74	1.7	1.7	1.8	2.3	1.2	43.71
	Min	Cent	-4.2	-0.2	0.5	0.4	-4.8	69.37
		693	-3.3	-0.3	0.7	0.6	-4.2	64.31
		694	-4.4	-0.6	0.5	-0.0	-5.0	70.17
		75	-5.3	-0.5	0.3	-0.1	-5.7	74.66
		74	-3.7	0.4	0.6	1.1	-4.3	69.45

		NODE	Vxx	Vyy
	Max	Cent	2.4	0.0
		693	2.0	-0.4
		694	2.0	0.5
		75	2.7	0.5
		74	2.7	-0.4
	Min	Cent	0.1	-1.0
		693	-0.2	-1.4
		694	-0.2	-0.6
		75	0.4	-0.6
		74	0.4	-1.4

ELEM	MAT	SEC	LC		NODE	Fxx	Fyy	Fxy	Fmax	Fmin	ANGLE
676	1	1	SX (RS)		Cent	0.8	0.1	0.7	1.2	-0.3	32.71
					694	0.7	0.2	0.7	1.2	-0.3	35.51
					695	0.7	0.2	0.7	1.2	-0.3	36.02
					76	0.9	0.2	0.7	1.3	-0.2	32.35
					75	0.9	0.2	0.7	1.3	-0.2	31.88

		NODE	Mxx	Myy	Mxy	Mmax	Mmin	ANGLE
		Cent	1.8	0.3	0.2	1.8	0.3	5.93
		694	1.3	0.2	0.1	1.3	0.2	5.98
		695	2.3	0.3	0.2	2.3	0.3	5.49
		76	2.3	0.4	0.2	2.4	0.4	5.97
		75	1.2	0.3	0.1	1.2	0.3	8.31

		NODE	Vxx	Vyy
		Cent	1.9	0.2
		694	1.8	0.3
		695	1.8	0.1
		76	1.9	0.1
		75	1.9	0.3

LC		NODE	Fxx	Fyy	Fxy	Fmax	Fmin	ANGLE
SY (RS)		Cent	1.4	0.4	0.9	2.0	-0.1	31.27
		694	1.2	0.4	0.9	1.8	-0.2	34.35
		695	1.2	0.4	0.9	1.8	-0.2	34.20

76	1.6	0.4	0.9	2.1	-0.1	28.55
75	1.6	0.4	0.9	2.1	-0.1	28.67

NODE	Mxx	Myy	Mxy	Mmax	Mmin	ANGLE
Cent	0.9	1.8	1.2	2.6	0.1	54.12
694	0.8	2.1	1.2	2.9	0.1	59.16
695	0.8	1.8	1.1	2.6	0.1	57.13
76	1.2	1.7	1.2	2.7	0.2	50.86
75	1.0	1.4	1.3	2.5	-0.1	48.49

NODE	Vxx	Vyy
Cent	0.6	1.0
694	0.4	1.6
695	0.4	0.5
76	0.9	0.5
75	0.9	1.6

LC		NODE	Fxx	Fyy	Fxy	Fmax	Fmin	ANGLE
RC ENV~1	Max	Cent	1.5	0.6	1.0	2.2	0.3	32.57
		694	1.3	0.6	1.0	2.0	0.3	36.10
		695	1.3	0.6	1.0	2.0	0.3	35.49
		76	1.8	0.6	1.0	2.3	0.3	29.43
		75	1.8	0.6	1.0	2.4	0.3	29.94
	Min	Cent	-1.3	-0.3	-0.9	0.2	-1.8	-60.76
		694	-1.1	-0.3	-0.9	0.2	-1.6	-54.45
		695	-1.1	-0.3	-0.9	0.3	-1.6	-68.37
		76	-1.5	-0.3	-0.9	0.2	-1.9	-62.45
		75	-1.5	-0.3	-0.9	0.2	-1.9	-49.66

	NODE	Mxx	Myy	Mxy	Mmax	Mmin	ANGLE
Max	Cent	4.5	2.1	2.3	4.5	2.1	0.09
	694	4.3	2.2	2.4	4.3	2.2	2.21
	695	5.4	2.6	2.1	5.4	2.6	-2.53
	76	4.7	1.8	2.1	4.7	1.8	-1.64
	75	3.8	1.7	2.5	3.8	1.7	3.18
Min	Cent	-6.2	-2.1	-0.2	-2.1	-6.4	-87.13
	694	-5.6	-2.6	-0.1	-2.6	-5.8	-89.22
	695	-6.2	-2.1	-0.4	-2.1	-6.3	-85.25
	76	-7.0	-2.1	-0.3	-2.1	-7.1	-85.72
	75	-6.0	-1.7	-0.1	-1.7	-6.2	-88.68

	NODE	Vxx	Vyy
Max	Cent	1.5	1.1
	694	1.3	1.1
	695	1.3	1.4
	76	1.7	1.4
	75	1.7	1.1
Min	Cent	-2.3	-1.3
	694	-2.4	-2.1
	695	-2.4	-0.6
	76	-2.2	-0.6
	75	-2.2	-2.1

LC		NODE	Fxx	Fyy	Fxy	Fmax	Fmin	ANGLE
RC ENV~2	Max	Cent	0.6	0.3	0.2	0.6	0.2	26.27
		694	0.5	0.3	0.2	0.6	0.2	35.28
		695	0.5	0.2	0.2	0.5	0.2	26.17
		76	0.6	0.2	0.2	0.7	0.2	20.14
		75	0.6	0.3	0.2	0.7	0.2	26.36
	Min	Cent	0.1	0.1	-0.0	0.2	0.0	-67.42
		694	0.0	0.1	-0.0	0.1	0.0	-62.76
		695	0.0	0.1	-0.0	0.2	0.0	66.73
		76	0.1	0.1	-0.0	0.2	0.0	59.02
		75	0.1	0.1	-0.0	0.1	0.0	-57.03

	NODE	Mxx	Myy	Mxy	Mmax	Mmin	ANGLE
Max	Cent	2.1	1.2	1.1	2.1	1.2	12.50
	694	2.0	1.3	1.2	2.1	1.2	19.80
	695	2.7	1.6	0.9	2.7	1.6	4.76
	76	2.2	1.1	0.9	2.2	1.0	6.00

		75	1.5	1.0	1.2	1.7	0.9	23.39
	Min	Cent	-4.6	-0.5	0.0	-0.3	-4.9	76.78
		694	-4.4	-0.6	0.1	-0.3	-4.8	74.20
		695	-4.2	-0.4	-0.1	-0.2	-4.4	77.55
		76	-5.0	-0.5	-0.1	-0.4	-5.1	79.28
		75	-5.0	-0.4	0.2	-0.1	-5.3	76.39

	NODE	Vxx	Vyy
Max	Cent	0.1	0.7
	694	0.0	0.5
	695	0.0	0.8
	76	0.3	0.8
	75	0.3	0.5
Min	Cent	-1.2	-0.4
	694	-1.3	-0.6
	695	-1.3	-0.1
	76	-1.1	-0.1
	75	-1.1	-0.6

ELEM	MAT	SEC	LC		NODE	Fxx	Fyy	Fxy	Fmax	Fmin	ANGLE
677	1	1	SX	(RS)	Cent	1.4	0.3	0.7	1.7	-0.0	24.67
					695	1.2	0.1	0.7	1.6	-0.2	25.08
					696	1.2	0.5	0.7	1.6	0.1	29.74
					77	1.6	0.5	0.7	1.9	0.2	24.81
					76	1.6	0.1	0.7	1.8	-0.1	21.19

	NODE	Mxx	Myy	Mxy	Mmax	Mmin	ANGLE
	Cent	2.8	0.4	0.3	2.8	0.4	7.84
	695	2.3	0.3	0.3	2.3	0.3	8.22
	696	3.2	0.5	0.4	3.3	0.4	7.63
	77	3.4	0.6	0.4	3.4	0.6	7.72
	76	2.3	0.4	0.3	2.3	0.3	8.33

	NODE	Vxx	Vyy
	Cent	1.8	0.2
	695	1.7	0.1
	696	1.7	0.3
	77	1.8	0.3
	76	1.8	0.1

LC		NODE	Fxx	Fyy	Fxy	Fmax	Fmin	ANGLE
SY	(RS)	Cent	1.1	0.4	0.9	1.8	-0.3	34.84
		695	0.9	0.4	0.9	1.6	-0.3	37.51
		696	0.9	0.4	0.9	1.6	-0.3	37.58
		77	1.3	0.4	0.9	1.9	-0.2	32.36
		76	1.3	0.4	0.9	1.9	-0.2	32.30

	NODE	Mxx	Myy	Mxy	Mmax	Mmin	ANGLE
	Cent	1.0	1.7	1.1	2.5	0.2	54.76
	695	0.8	1.9	1.0	2.5	0.1	58.76
	696	0.8	1.9	1.0	2.5	0.2	59.09
	77	1.1	1.5	1.1	2.4	0.2	49.58
	76	1.2	1.7	1.1	2.6	0.3	51.29

	NODE	Vxx	Vyy
	Cent	0.4	0.7
	695	0.2	0.5
	696	0.2	1.0
	77	0.5	1.0
	76	0.5	0.5

LC		NODE	Fxx	Fyy	Fxy	Fmax	Fmin	ANGLE
RC ENV~1	Max	Cent	1.6	0.6	1.1	2.1	0.1	35.91
		695	1.4	0.6	1.1	2.0	0.1	38.57
		696	1.4	0.6	1.1	2.0	0.1	38.43
		77	1.8	0.6	1.1	2.3	0.2	33.43
		76	1.8	0.6	1.1	2.3	0.1	33.55
	Min	Cent	-1.2	-0.2	-0.8	0.0	-1.4	-69.72

695	-1.1	-0.2	-0.8	0.2	-1.3	81.78
696	-1.1	-0.3	-0.8	-0.1	-1.3	-64.39
77	-1.4	-0.3	-0.8	-0.1	-1.5	-69.11
76	-1.4	-0.2	-0.8	0.2	-1.5	-73.03

	NODE	Mxx	Myy	Mxy	Mmax	Mmin	ANGLE
Max	Cent	5.9	2.8	1.6	5.9	2.7	-7.33
	695	5.1	2.6	1.6	5.2	2.5	-9.58
	696	7.3	3.6	1.2	7.4	3.5	-9.85
	77	6.7	3.1	1.5	6.8	3.1	-5.74
	76	4.5	1.7	1.9	4.5	1.7	-3.12
Min	Cent	-6.3	-1.7	-0.8	-1.6	-6.3	-78.61
	695	-6.4	-2.2	-0.8	-2.1	-6.4	-79.40
	696	-5.6	-1.5	-1.1	-1.2	-5.6	-68.61
	77	-6.4	-0.9	-0.7	-0.8	-6.4	-78.67
	76	-7.1	-2.1	-0.5	-2.1	-7.1	-83.92

	NODE	Vxx	Vyy
Max	Cent	-1.1	1.1
	695	-1.2	1.4
	696	-1.2	0.9
	77	-1.0	0.9
	76	-1.0	1.4
Min	Cent	-4.7	-1.0
	695	-4.6	-0.6
	696	-4.6	-1.4
	77	-4.7	-1.4
	76	-4.7	-0.6

LC		NODE	Fxx	Fyy	Fxy	Fmax	Fmin	ANGLE
RC ENV~2	Max	Cent	0.9	0.3	0.4	1.0	0.1	22.09
		695	0.8	0.3	0.4	1.0	0.0	26.47
		696	0.8	0.3	0.4	0.9	0.1	22.31
		77	1.0	0.3	0.4	1.1	0.1	18.76
		76	1.0	0.3	0.4	1.1	0.1	21.88
	Min	Cent	-0.1	0.1	0.1	0.2	-0.1	79.71
		695	-0.1	0.1	0.1	0.2	-0.1	76.88
		696	-0.1	-0.0	0.1	0.3	-0.1	80.90
		77	-0.1	-0.0	0.1	0.3	-0.1	81.57
		76	-0.1	0.1	0.1	0.2	-0.2	78.18

	NODE	Mxx	Myy	Mxy	Mmax	Mmin	ANGLE
Max	Cent	3.1	1.8	0.5	3.1	1.7	-7.03
	695	2.5	1.6	0.6	2.5	1.5	-10.42
	696	4.2	2.4	0.3	4.3	2.3	-10.89
	77	3.7	2.1	0.4	3.7	2.1	-5.11
	76	2.0	1.0	0.7	2.0	1.0	2.48
Min	Cent	-3.8	-0.1	-0.4	-0.0	-3.9	83.88
	695	-4.4	-0.5	-0.4	-0.4	-4.4	83.23
	696	-2.6	0.3	-0.6	0.3	-2.6	87.02
	77	-3.3	0.4	-0.4	0.5	-3.4	84.65
	76	-5.1	-0.5	-0.2	-0.4	-5.2	81.73

	NODE	Vxx	Vyy
Max	Cent	-2.0	0.7
	695	-2.1	0.8
	696	-2.1	0.5
	77	-2.0	0.5
	76	-2.0	0.8
Min	Cent	-3.2	-0.3
	695	-3.2	-0.1
	696	-3.2	-0.5
	77	-3.2	-0.5
	76	-3.2	-0.1

ELEM	MAT	SEC	LC		NODE	Fxx	Fyy	Fxy	Fmax	Fmin	ANGLE
678	1	1	SX (RS)		Cent	2.2	0.6	0.7	2.5	0.3	20.30
					696	1.9	0.3	0.7	2.2	0.0	20.72
					697	1.9	0.8	0.7	2.3	0.5	25.68
					78	2.5	0.8	0.7	2.8	0.5	19.96
					77	2.5	0.3	0.7	2.7	0.1	16.60

	NODE	Mxx	Myy	Mxy	Mmax	Mmin	ANGLE
	Cent	3.8	0.7	0.5	3.8	0.7	9.08
	696	3.2	0.5	0.5	3.3	0.4	9.12
	697	4.3	0.9	0.5	4.4	0.8	8.65
	78	4.3	1.0	0.5	4.3	0.9	8.92
	77	3.3	0.6	0.5	3.4	0.6	9.78

	NODE	Vxx	Vyy
	Cent	1.7	0.2
	696	1.8	0.3
	697	1.8	0.1
	78	1.7	0.1
	77	1.7	0.3

LC		NODE	Fxx	Fyy	Fxy	Fmax	Fmin	ANGLE
SY (RS)		Cent	0.9	0.4	1.2	1.8	-0.6	39.27
		696	0.7	0.4	1.2	1.8	-0.6	41.54
		697	0.7	0.6	1.2	1.9	-0.5	43.99
		78	1.0	0.6	1.2	2.0	-0.4	40.26
		77	1.0	0.4	1.2	1.9	-0.5	37.89

	NODE	Mxx	Myy	Mxy	Mmax	Mmin	ANGLE
	Cent	0.8	1.9	1.1	2.6	0.1	58.31
	696	0.7	1.9	1.0	2.4	0.1	60.90
	697	0.5	2.1	1.0	2.6	0.0	64.21
	78	1.0	2.3	1.3	3.1	0.2	58.28
	77	1.1	1.5	1.2	2.5	0.1	49.26

	NODE	Vxx	Vyy
	Cent	0.5	0.4
	696	0.5	1.0
	697	0.5	0.3
	78	0.6	0.3
	77	0.6	1.0

LC		NODE	Fxx	Fyy	Fxy	Fmax	Fmin	ANGLE
RC ENV~1	Max	Cent	2.5	0.8	1.5	3.0	0.3	25.35
		696	2.2	0.6	1.5	2.7	-0.0	25.13
		697	2.2	1.2	1.5	2.9	0.5	31.74
		78	2.8	1.2	1.5	3.3	0.7	25.64
		77	2.8	0.6	1.5	3.2	0.1	20.70
	Min	Cent	-1.9	-0.3	-0.9	-0.2	-2.0	-77.16
		696	-1.7	-0.2	-0.9	-0.1	-1.8	-76.26
		697	-1.7	-0.4	-0.9	-0.3	-1.8	-73.88
		78	-2.2	-0.4	-0.9	-0.3	-2.3	-77.90
		77	-2.2	-0.2	-0.9	-0.1	-2.3	-79.34

	NODE	Mxx	Myy	Mxy	Mmax	Mmin	ANGLE
Max	Cent	8.6	4.3	0.9	8.8	4.1	-12.07
	696	7.1	3.6	0.8	7.4	3.3	-15.75
	697	10.0	4.0	0.7	10.3	3.8	-10.32
	78	11.8	6.9	1.2	11.9	6.8	-7.39
	77	5.5	2.9	1.3	5.7	2.8	-11.94
Min	Cent	-4.8	-0.7	-1.4	0.1	-4.9	-56.75
	696	-5.6	-1.5	-1.5	-0.8	-5.7	-62.27
	697	-3.8	-1.4	-1.6	0.0	-4.0	-76.88
	78	-2.7	1.0	-1.3	2.1	-2.7	-49.82
	77	-7.0	-1.1	-1.1	-0.8	-7.1	-75.11

	NODE	Vxx	Vyy
Max	Cent	-5.1	-1.9
	696	-3.3	0.9
	697	-3.3	-4.3
	78	-6.9	-4.3
	77	-6.9	0.9
Min	Cent	-9.0	-3.1
	696	-6.8	-1.4
	697	-6.8	-5.8

		78	-11.3	-5.8		
		77	-11.3	-1.4		

LC		NODE	Fxx	Fyy	Fxy	Fmax	Fmin	ANGLE
RC ENV~2	Max	Cent	1.3	0.5	0.6	1.6	0.0	22.03
		696	1.2	0.3	0.6	1.4	-0.0	23.86
		697	1.2	0.7	0.6	1.4	0.1	24.19
		78	1.5	0.7	0.6	1.7	0.1	20.42
		77	1.5	0.3	0.6	1.7	-0.0	20.17
	Min	Cent	-0.3	0.0	0.1	0.4	-0.4	59.28
		696	-0.3	0.1	0.1	0.3	-0.3	76.13
		697	-0.3	0.0	0.1	0.5	-0.3	66.16
		78	-0.4	0.0	0.1	0.6	-0.4	66.08
		77	-0.4	0.1	0.1	0.2	-0.4	78.13

	NODE	Mxx	Myy	Mxy	Mmax	Mmin	ANGLE
Max	Cent	5.3	3.0	-0.2	5.5	2.8	-14.37
	696	4.1	2.3	-0.2	4.3	2.1	-19.70
	697	6.5	2.6	-0.4	6.6	2.5	-11.20
	78	7.8	5.0	-0.0	7.8	4.9	-8.19
	77	2.9	1.9	0.1	3.0	1.8	-18.01
Min	Cent	-1.4	1.1	-1.0	1.1	-1.4	-83.18
	696	-2.7	0.3	-1.0	0.3	-2.8	-84.35
	697	0.1	0.6	-1.1	0.9	-0.2	-58.77
	78	1.2	3.2	-0.8	3.2	1.2	-85.55
	77	-4.1	0.3	-0.7	0.3	-4.1	89.79

	NODE	Vxx	Vyy
Max	Cent	-5.2	-1.7
	696	-3.4	0.5
	697	-3.4	-3.8
	78	-7.0	-3.8
	77	-7.0	0.5
Min	Cent	-7.0	-2.6
	696	-5.3	-0.5
	697	-5.3	-4.6
	78	-8.8	-4.6
	77	-8.8	-0.5

ELEM	MAT	SEC	LC		NODE	Fxx	Fyy	Fxy	Fmax	Fmin	ANGLE
679	1	1	SX (RS)		Cent	3.5	1.0	1.1	3.9	0.5	21.19
					697	2.8	0.6	1.1	3.3	0.1	22.70
					698	2.8	1.4	1.1	3.4	0.8	29.53
					79	4.2	1.4	1.1	4.6	1.0	19.87
					78	4.2	0.6	1.1	4.5	0.2	16.09

	NODE	Mxx	Myy	Mxy	Mmax	Mmin	ANGLE
	Cent	5.0	1.0	0.6	5.1	0.9	8.45
	697	4.4	1.0	0.7	4.6	0.8	10.49
	698	5.1	0.8	0.7	5.2	0.7	9.56
	79	6.5	2.9	0.6	6.6	2.8	9.74
	78	3.9	0.9	0.6	4.0	0.8	10.21

	NODE	Vxx	Vyy
	Cent	2.9	3.3
	697	1.8	0.1
	698	1.8	6.5
	79	4.0	6.5
	78	4.0	0.1

LC		NODE	Fxx	Fyy	Fxy	Fmax	Fmin	ANGLE
SY (RS)		Cent	0.6	0.4	1.4	1.9	-0.8	43.09
		697	0.5	0.7	1.4	1.9	-0.8	47.03
		698	0.5	0.6	1.4	1.9	-0.8	46.77
		79	1.0	0.6	1.4	2.2	-0.6	41.76
		78	1.0	0.7	1.4	2.2	-0.6	42.02

	NODE	Mxx	Myy	Mxy	Mmax	Mmin	ANGLE

Cent	0.6	1.4	1.2	2.2	-0.2	55.14
697	0.4	2.1	1.3	2.8	-0.3	61.05
698	1.3	3.7	1.3	4.3	0.7	66.61
79	0.9	2.8	0.8	3.1	0.6	69.78
78	1.0	2.3	0.8	2.7	0.6	63.48

NODE	Vxx	Vyy
Cent	0.3	5.6
697	1.7	0.3
698	1.7	11.5
79	1.0	11.5
78	1.0	0.3

LC		NODE	Fxx	Fyy	Fxy	Fmax	Fmin	ANGLE
RC ENV~1	Max	Cent	3.9	1.2	1.8	4.7	0.5	24.59
		697	3.3	1.1	1.8	4.1	0.2	27.00
		698	3.3	1.4	1.8	4.2	0.5	30.01
		79	4.6	1.4	1.8	5.3	0.8	22.52
		78	4.6	1.1	1.8	5.2	0.4	20.53
	Min	Cent	-3.0	-0.8	-0.9	-0.6	-3.2	-74.27
		697	-2.3	-0.3	-0.9	0.1	-2.5	-73.89
		698	-2.3	-1.4	-0.9	-1.1	-2.7	-61.54
		79	-3.7	-1.4	-0.9	-1.2	-3.9	-74.59
		78	-3.7	-0.3	-0.9	-0.0	-3.9	-79.52

	NODE	Mxx	Myy	Mxy	Mmax	Mmin	ANGLE
Max	Cent	11.8	6.7	1.0	11.9	6.6	-7.83
	697	9.8	3.9	0.9	10.0	3.7	-10.07
	698	13.1	6.0	0.8	13.4	5.6	-11.10
	79	14.1	11.4	0.9	14.3	11.3	-11.90
	78	10.2	6.6	1.0	10.2	6.5	-3.19
Min	Cent	-2.7	1.6	-1.4	2.2	-2.8	-80.93
	697	-4.2	-1.4	-1.8	0.0	-4.4	-75.60
	698	-1.3	-1.5	-2.0	1.8	-2.2	-68.23
	79	-2.1	3.4	-0.9	3.4	-2.1	-84.45
	78	-3.3	0.8	-0.7	1.1	-3.4	-67.40

	NODE	Vxx	Vyy
Max	Cent	-2.9	-0.4
	697	-4.0	-4.3
	698	-4.0	3.9
	79	-1.8	3.9
	78	-1.8	-4.3
Min	Cent	-8.7	-11.7
	697	-7.7	-5.8
	698	-7.7	-19.1
	79	-9.7	-19.1
	78	-9.7	-5.8

LC		NODE	Fxx	Fyy	Fxy	Fmax	Fmin	ANGLE
RC ENV~2	Max	Cent	2.1	0.6	1.0	2.4	-0.1	20.35
		697	1.8	0.7	1.0	2.2	0.0	25.95
		698	1.8	0.5	1.0	2.1	-0.1	19.46
		79	2.3	0.5	1.0	2.6	-0.2	16.49
		78	2.3	0.7	1.0	2.7	0.1	21.32
	Min	Cent	-0.6	-0.2	0.1	0.5	-0.7	62.43
		697	-0.4	0.2	0.1	0.6	-0.4	85.10
		698	-0.4	-0.6	0.1	0.4	-0.9	51.08
		79	-0.9	-0.6	0.1	0.3	-0.9	62.75
		78	-0.9	0.2	0.1	0.5	-0.9	69.83

	NODE	Mxx	Myy	Mxy	Mmax	Mmin	ANGLE
Max	Cent	7.9	4.8	-0.2	8.0	4.7	-8.57
	697	6.3	2.6	-0.4	6.4	2.5	-11.14
	698	9.0	4.2	-0.5	9.2	3.9	-11.35
	79	9.8	8.4	0.1	9.9	8.3	-13.83
	78	6.6	4.7	0.2	6.6	4.7	-2.76
Min	Cent	1.9	3.0	-0.9	3.0	1.8	-79.97
	697	-0.1	0.6	-1.2	0.9	-0.4	-63.92
	698	3.5	2.0	-1.4	3.7	1.9	-19.56
	79	4.0	5.8	-0.6	5.8	4.0	-82.81

78	0.2	3.0	-0.4	3.0	0.2	88.01

	NODE	Vxx	Vyy
Max	Cent	-3.2	-4.2
	697	-3.6	-3.8
	698	-3.6	-4.4
	79	-2.7	-4.4
	78	-2.7	-3.8
Min	Cent	-6.3	-7.3
	697	-6.2	-4.6
	698	-6.2	-10.2
	79	-6.6	-10.2
	78	-6.6	-4.6

ELEM	MAT	SEC	LC		NODE	Fxx	Fyy	Fxy	Fmax	Fmin	ANGLE
680	1	1	SX (RS)		Cent	6.0	0.6	3.4	7.7	-1.0	25.75
					698	0.2	0.9	3.4	4.0	-2.9	48.15
					246	0.2	0.5	3.4	3.7	-3.1	46.19
					16	12.0	0.5	3.4	12.9	-0.5	15.29
					79	12.0	0.9	3.4	13.0	-0.0	15.82

	NODE	Mxx	Myy	Mxy	Mmax	Mmin	ANGLE
	Cent	9.1	1.0	2.9	10.0	0.1	17.59
	698	5.5	0.7	0.7	5.6	0.7	7.97
	246	3.6	1.1	7.0	9.4	-4.8	39.89
	16	27.3	2.6	6.4	28.8	1.0	13.61
	79	6.9	3.0	0.7	7.0	2.8	10.15

	NODE	Vxx	Vyy
	Cent	10.6	0.8
	698	15.7	6.5
	246	15.7	5.7
	16	36.9	5.7
	79	36.9	6.5

LC		NODE	Fxx	Fyy	Fxy	Fmax	Fmin	ANGLE
SY (RS)		Cent	0.7	4.4	3.1	6.1	-1.1	60.72
		698	0.8	0.6	3.1	3.8	-2.3	44.12
		246	0.8	9.2	3.1	10.2	-0.2	71.88
		16	0.9	9.2	3.1	10.2	-0.1	71.77
		79	0.9	0.6	3.1	3.8	-2.3	43.80

	NODE	Mxx	Myy	Mxy	Mmax	Mmin	ANGLE
	Cent	1.0	6.4	2.1	7.1	0.3	71.27
	698	0.6	3.4	0.5	3.4	0.6	80.82
	246	2.4	5.5	0.2	5.5	2.4	87.01
	16	2.5	19.5	4.4	20.5	1.4	76.43
	79	0.8	2.7	4.8	6.6	-3.1	50.77

	NODE	Vxx	Vyy
	Cent	0.5	7.8
	698	4.5	11.5
	246	4.5	27.0
	16	3.5	27.0
	79	3.5	11.5

LC		NODE	Fxx	Fyy	Fxy	Fmax	Fmin	ANGLE
RC ENV~1	Max	Cent	6.7	6.3	4.7	9.8	-0.0	33.08
		698	0.6	1.0	4.7	5.3	-0.1	47.95
		246	0.6	12.9	4.7	14.4	-0.1	72.22
		16	13.5	12.9	4.7	15.5	3.7	22.77
		79	13.5	1.0	4.7	15.1	-0.6	18.54
	Min	Cent	-5.4	-2.5	-2.1	0.9	-6.0	-26.95
		698	-1.0	-0.9	-2.1	0.5	-4.6	-84.71
		246	-1.0	-5.4	-2.1	-0.4	-6.0	-19.01
		16	-10.5	-5.4	-2.1	1.1	-10.8	-14.82
		79	-10.5	-0.9	-2.1	-0.4	-10.9	-78.30

	NODE	Mxx	Myy	Mxy	Mmax	Mmin	ANGLE
Max	Cent	16.3	10.1	1.9	16.7	7.6	-11.98
	698	14.1	6.1	0.1	14.5	5.7	-11.52
	246	15.2	6.4	6.6	16.6	6.4	-17.20
	16	37.8	25.2	5.2	38.7	13.2	9.76
	79	11.4	10.8	3.5	13.7	8.8	-43.93
Min	Cent	-2.9	-2.7	-3.8	4.6	-4.8	-63.41
	698	-1.2	-1.1	-2.1	2.0	-1.7	-69.18
	246	3.4	-4.5	-7.5	4.7	-6.0	-3.80
	16	-16.8	-13.7	-7.5	5.7	-19.3	-71.57
	79	-4.0	3.0	-6.0	3.5	-4.5	-75.46

	NODE	Vxx	Vyy
Max	Cent	1.0	0.0
	698	10.4	3.9
	246	10.4	19.1
	16	23.1	19.1
	79	23.1	3.9
Min	Cent	-20.1	-15.5
	698	-21.1	-19.1
	246	-21.1	-34.9
	16	-50.6	-34.9
	79	-50.6	-19.1

LC		NODE	Fxx	Fyy	Fxy	Fmax	Fmin	ANGLE
RC ENV~2	Max	Cent	3.4	3.0	3.0	5.8	-0.0	38.08
		698	-0.1	0.3	3.0	2.8	-0.1	44.43
		246	-0.1	5.8	3.0	6.6	-0.1	67.30
		16	7.1	5.8	3.0	9.0	2.7	32.35
		79	7.1	0.3	3.0	8.2	-0.7	19.56
	Min	Cent	-1.4	1.4	0.1	2.1	-1.4	73.78
		698	-0.2	-0.3	0.1	0.4	-3.3	74.51
		246	-0.2	3.2	0.1	3.7	-1.7	79.87
		16	-2.6	3.2	0.1	3.7	-2.6	80.67
		79	-2.6	-0.3	0.1	0.3	-2.6	87.41

	NODE	Mxx	Myy	Mxy	Mmax	Mmin	ANGLE
Max	Cent	11.5	5.6	-0.4	11.8	5.5	-12.33
	698	9.8	4.3	-0.5	10.0	4.0	-11.68
	246	10.9	2.2	1.3	11.8	1.6	-16.25
	16	21.8	9.4	0.5	21.8	9.4	-0.04
	79	7.8	7.9	-1.0	9.7	6.2	-47.92
Min	Cent	4.9	3.6	-2.6	6.0	2.2	-24.69
	698	3.9	2.2	-1.4	4.0	2.0	-16.69
	246	6.8	0.1	-3.5	6.8	-0.1	-0.01
	16	2.2	5.5	-4.0	8.4	0.2	-61.38
	79	2.3	5.4	-2.5	5.8	1.8	-72.39

	NODE	Vxx	Vyy
Max	Cent	-4.1	-7.6
	698	0.7	-4.4
	246	0.7	-7.7
	16	1.3	-7.7
	79	1.3	-4.4
Min	Cent	-13.2	-10.6
	698	-9.9	-10.2
	246	-9.9	-13.7
	16	-26.7	-13.7
	79	-26.7	-10.2

ALLEGATO 1

TABULATI DI CALCOLO ANALISI MODALE

Edificio filtri-01

```
*****************************************************************************************
***************
**          MIDAS/Gen V8.7.5 - Modeling, Integrated Design & Analysis Software
          **
**                          GENERAL STRUCTURE DESIGN SYSTEM FOR WINDOWS
          **
*****************************************************************************************
***************


                                  ....xxxxxxxx*********xxxxxxxx......

                              xXXXXXX***''               ```***XXXXXXXXXXx.

                          XXXXXXX                                  ``*XXXXXXXx.

         XXXXXXXXXX      XXXXXXX XX                                      `*XXXXXX.

         XXXXXXXXXXX    XXXXXX XXXX                                        `*XXXXX

         XXXXXXXXXXXX  XXXXXX XXXXX  XXXXX  XXXXXXXXXXx        XXXXX
.XXXX.`XXXXX
         XXXXXXXXXXXX::XXXXX XXXXXX  XXXXX  XXXXXXXXXXXX      XXXXXXX    :XXXXXX:
XXXXX
         XXXXXX XXXXX XXXXX: XXXXXX  XXXXX  XXXXX   xXXXX    :XXXXXXX:   XXXX:
XXXXX
         XXXXXX  XXXX XXXXX  XXXXXX  XXXXX  XXXXX    XXXXX  :XXXX:XXXX   XXXXXXXXX:

         XXXXXX  XXX XXXXX:  XXXXXX  XXXXX  XXXXX    :XXXX  XXXXX XXXXX   :XXXXXXXXXX

         XXXXXX  :XX XXXXX   XXXXXX  XXXXX  XXXXX    :XXXX :XXXX: :XXXX:
`:XXXXXXXX:
         XXXXXX   XX XXXXX   XXXXXX  XXXXX  XXXXX    XXXXX XXXXX   XXXXX XXXX
XXXXX
         XXXXXX   XX XXXXX   XXXXXX  XXXXX  XXXXX   xXXXX XXXXX:   :XXXXX:XXXX
.XXXX
         XXXXXX   :XXXXXXX   XXXXXX  XXXXX  XXXXXXXXXXXX :XXXX:     XXXXX
XXXXXXXXXXX:
         XXXXXX    XXXXXXX   XXXXXX  XXXXX  XXXXXXXXXXx  XXXXX      :XXXXX `XXXXXXX'
   /GEN


         ---------------- PC WINDOWS XP/VISTA/7/8/8.1 VERSION. V8.7.5
------------------


                  Copyright ¨Ï SINCE 1989 MIDAS Information Technology Co., Ltd.

                          ALL RIGHTS RESERVED MIDAS IT Co., Ltd.


*****************************************************************************************
***************


 ----------------------------------------S T A R T I N G       S O L U T I O N

 MULTI-FRONTAL SOLVER
 AVAILABLE MEMORY =    5.5 GBYTES

 INTERNAL DATA REGENERATION ( ENTRY REGEN_MODEL )

♀**  MIDAS/Gen WINDOWS VERSION 8.7.5                                  DATE
FEB/17/2020  TIME 16: 2: 1
**  Modeling, Integrated Design & Analysis Software              PC WINDOWS
XP/VISTA/7/8/8.1 VERSION
=========================================================================================
```

==========

N U M B E R I N G E Q U A T I O N

INFORMATION FOR EQUATION NUMBER

SERIAL NO.	NODE NO.	EQUATION NUMBERS FOR EACH DEGREE OF FREEDOM X	Y	Z	XX	YY	ZZ
1	1	1	2	3	4	5	6
2	2	7	8	9	10	11	12
3	3	13	14	15	16	17	18
4	4	19	20	21	22	23	24
5	5	25	26	27	28	29	30
6	6	31	32	33	34	35	36
7	7	37	38	39	40	41	42
8	8	43	44	45	46	47	48
9	9	49	50	51	52	53	54
10	10	55	56	57	58	59	60
11	11	61	62	63	64	65	66
12	12	67	68	69	70	71	72
13	13	73	74	75	76	77	78
14	14	79	80	81	82	83	84
15	15	85	86	87	88	89	90
16	16	91	92	93	94	95	96
17	17	97	98	99	100	101	102
18	18	103	104	105	106	107	108
19	19	109	110	111	112	113	114
20	20	115	116	117	118	119	120
21	21	121	122	123	124	125	126
22	22	127	128	129	130	131	132
23	23	133	134	135	136	137	138
24	24	139	140	141	142	143	144
25	25	145	146	147	148	149	150
26	26	151	152	153	154	155	156
27	27	157	158	159	160	161	162
28	28	163	164	165	166	167	168
29	29	169	170	171	172	173	174
30	30	175	176	177	178	179	180
31	31	181	182	183	184	185	186
32	32	187	188	189	190	191	192
33	33	193	194	195	196	197	198
34	34	199	200	201	202	203	204
35	35	205	206	207	208	209	210
36	36	211	212	213	214	215	216
37	37	217	218	219	220	221	222
38	38	223	224	225	226	227	228
39	39	229	230	231	232	233	234
40	40	235	236	237	238	239	240
41	41	241	242	243	244	245	246
42	42	247	248	249	250	251	252
43	43	253	254	255	256	257	258
44	44	259	260	261	262	263	264
45	45	265	266	267	268	269	270
46	46	271	272	273	274	275	276
47	47	277	278	279	280	281	282
48	48	283	284	285	286	287	288
49	49	289	290	291	292	293	294
50	50	295	296	297	298	299	300
51	51	301	302	303	304	305	306
52	52	307	308	309	310	311	312
53	53	313	314	315	316	317	318
54	54	319	320	321	322	323	324
55	55	325	326	327	328	329	330

56	56	331	332	333	334	335	336
57	57	337	338	339	340	341	342
58	58	343	344	345	346	347	348
59	59	349	350	351	352	353	354
60	60	355	356	357	358	359	360
61	61	361	362	363	364	365	366
62	62	367	368	369	370	371	372
63	63	373	374	375	376	377	378
64	64	379	380	381	382	383	384
65	65	385	386	387	388	389	390
66	66	391	392	393	394	395	396
67	67	397	398	399	400	401	402
68	68	403	404	405	406	407	408
69	69	409	410	411	412	413	414
70	70	415	416	417	418	419	420
71	71	421	422	423	424	425	426
72	72	427	428	429	430	431	432
73	73	433	434	435	436	437	438
74	74	439	440	441	442	443	444
75	75	445	446	447	448	449	450
76	76	451	452	453	454	455	456
77	77	457	458	459	460	461	462
78	78	463	464	465	466	467	468
79	79	469	470	471	472	473	474
80	80	475	476	477	478	479	480
81	81	481	482	483	484	485	486
82	82	487	488	489	490	491	492
83	83	493	494	495	496	497	498
84	84	499	500	501	502	503	504
85	85	505	506	507	508	509	510
86	86	511	512	513	514	515	516
87	87	517	518	519	520	521	522
88	88	523	524	525	526	527	528
89	89	529	530	531	532	533	534
90	90	535	536	537	538	539	540
91	91	541	542	543	544	545	546
92	92	547	548	549	550	551	552
93	93	553	554	555	556	557	558
94	94	559	560	561	562	563	564
95	95	565	566	567	568	569	570
96	96	571	572	573	574	575	576
97	97	577	578	579	580	581	582
98	98	583	584	585	586	587	588
99	99	589	590	591	592	593	594
100	100	595	596	597	598	599	600
101	101	601	602	603	604	605	606
102	102	607	608	609	610	611	612
103	103	613	614	615	616	617	618
104	104	619	620	621	622	623	624
105	105	625	626	627	628	629	630
106	106	631	632	633	634	635	636
107	107	637	638	639	640	641	642
108	108	643	644	645	646	647	648
109	109	649	650	651	652	653	654
110	110	655	656	657	658	659	660
111	111	661	662	663	664	665	666
112	112	667	668	669	670	671	672
113	113	673	674	675	676	677	678
114	114	679	680	681	682	683	684
115	115	685	686	687	688	689	690
116	116	691	692	693	694	695	696
117	117	697	698	699	700	701	702
118	118	703	704	705	706	707	708
119	119	709	710	711	712	713	714
120	120	715	716	717	718	719	720
121	121	721	722	723	724	725	726
122	122	727	728	729	730	731	732
123	123	733	734	735	736	737	738

124	124	739	740	741	742	743	744
125	125	745	746	747	748	749	750
126	126	751	752	753	754	755	756
127	127	757	758	759	760	761	762
128	128	763	764	765	766	767	768
129	129	769	770	771	772	773	774
130	130	775	776	777	778	779	780
131	131	781	782	783	784	785	786
132	132	787	788	789	790	791	792
133	133	793	794	795	796	797	798
134	134	799	800	801	802	803	804
135	135	805	806	807	808	809	810
136	136	811	812	813	814	815	816
137	137	817	818	819	820	821	822
138	138	823	824	825	826	827	828
139	139	829	830	831	832	833	834
140	140	835	836	837	838	839	840
141	141	841	842	843	844	845	846
142	142	847	848	849	850	851	852
143	143	853	854	855	856	857	858
144	144	859	860	861	862	863	864
145	145	865	866	867	868	869	870
146	146	871	872	873	874	875	876
147	147	877	878	879	880	881	882
148	148	883	884	885	886	887	888
149	149	889	890	891	892	893	894
150	150	895	896	897	898	899	900
151	151	901	902	903	904	905	906
152	152	907	908	909	910	911	912
153	153	913	914	915	916	917	918
154	154	919	920	921	922	923	924
155	155	925	926	927	928	929	930
156	156	931	932	933	934	935	936
157	157	937	938	939	940	941	942
158	158	943	944	945	946	947	948
159	159	949	950	951	952	953	954
160	160	955	956	957	958	959	960
161	161	961	962	963	964	965	966
162	162	967	968	969	970	971	972
163	163	973	974	975	976	977	978
164	164	979	980	981	982	983	984
165	165	985	986	987	988	989	990
166	166	991	992	993	994	995	996
167	167	997	998	999	1000	1001	1002
168	168	1003	1004	1005	1006	1007	1008
169	169	1009	1010	1011	1012	1013	1014
170	170	1015	1016	1017	1018	1019	1020
171	171	1021	1022	1023	1024	1025	1026
172	172	1027	1028	1029	1030	1031	1032
173	173	1033	1034	1035	1036	1037	1038
174	174	1039	1040	1041	1042	1043	1044
175	175	1045	1046	1047	1048	1049	1050
176	176	1051	1052	1053	1054	1055	1056
177	177	1057	1058	1059	1060	1061	1062
178	178	1063	1064	1065	1066	1067	1068
179	179	1069	1070	1071	1072	1073	1074
180	180	1075	1076	1077	1078	1079	1080
181	181	1081	1082	1083	1084	1085	1086
182	182	1087	1088	1089	1090	1091	1092
183	183	1093	1094	1095	1096	1097	1098
184	184	1099	1100	1101	1102	1103	1104
185	185	1105	1106	1107	1108	1109	1110
186	186	1111	1112	1113	1114	1115	1116
187	187	1117	1118	1119	1120	1121	1122
188	188	1123	1124	1125	1126	1127	1128
189	189	1129	1130	1131	1132	1133	1134
190	190	1135	1136	1137	1138	1139	1140
191	191	1141	1142	1143	1144	1145	1146

192	192	1147	1148	1149	1150	1151	1152
193	193	1153	1154	1155	1156	1157	1158
194	194	1159	1160	1161	1162	1163	1164
195	195	1165	1166	1167	1168	1169	1170
196	196	1171	1172	1173	1174	1175	1176
197	197	1177	1178	1179	1180	1181	1182
198	198	1183	1184	1185	1186	1187	1188
199	199	1189	1190	1191	1192	1193	1194
200	200	1195	1196	1197	1198	1199	1200
201	201	1201	1202	1203	1204	1205	1206
202	202	1207	1208	1209	1210	1211	1212
203	203	1213	1214	1215	1216	1217	1218
204	204	1219	1220	1221	1222	1223	1224
205	205	1225	1226	1227	1228	1229	1230
206	206	1231	1232	1233	1234	1235	1236
207	207	1237	1238	1239	1240	1241	1242
208	208	1243	1244	1245	1246	1247	1248
209	209	1249	1250	1251	1252	1253	1254
210	210	1255	1256	1257	1258	1259	1260
211	211	1261	1262	1263	1264	1265	1266
212	212	1267	1268	1269	1270	1271	1272
213	213	1273	1274	1275	1276	1277	1278
214	214	1279	1280	1281	1282	1283	1284
215	215	1285	1286	1287	1288	1289	1290
216	216	1291	1292	1293	1294	1295	1296
217	217	1297	1298	1299	1300	1301	1302
218	218	1303	1304	1305	1306	1307	1308
219	219	1309	1310	1311	1312	1313	1314
220	220	1315	1316	1317	1318	1319	1320
221	221	1321	1322	1323	1324	1325	1326
222	222	1327	1328	1329	1330	1331	1332
223	223	1333	1334	1335	1336	1337	1338
224	224	1339	1340	1341	1342	1343	1344
225	225	1345	1346	1347	1348	1349	1350
226	226	1351	1352	1353	1354	1355	1356
227	227	1357	1358	1359	1360	1361	1362
228	228	1363	1364	1365	1366	1367	1368
229	229	1369	1370	1371	1372	1373	1374
230	230	1375	1376	1377	1378	1379	1380
231	231	1381	1382	1383	1384	1385	1386
232	232	1387	1388	1389	1390	1391	1392
233	233	1393	1394	1395	1396	1397	1398
234	234	1399	1400	1401	1402	1403	1404
235	235	1405	1406	1407	1408	1409	1410
236	236	1411	1412	1413	1414	1415	1416
237	237	1417	1418	1419	1420	1421	1422
238	238	1423	1424	1425	1426	1427	1428
239	239	1429	1430	1431	1432	1433	1434
240	240	1435	1436	1437	1438	1439	1440
241	241	1441	1442	1443	1444	1445	1446
242	242	1447	1448	1449	1450	1451	1452
243	243	1453	1454	1455	1456	1457	1458
244	244	1459	1460	1461	1462	1463	1464
245	245	1465	1466	1467	1468	1469	1470
246	246	1471	1472	1473	1474	1475	1476
247	247	1477	1478	1479	1480	1481	1482
248	248	1483	1484	1485	1486	1487	1488
249	249	1489	1490	1491	1492	1493	1494
250	250	1495	1496	1497	1498	1499	1500
251	251	1501	1502	1503	1504	1505	1506
252	252	1507	1508	1509	1510	1511	1512
253	253	1513	1514	1515	1516	1517	1518
254	254	1519	1520	1521	1522	1523	1524
255	255	1525	1526	1527	1528	1529	1530
256	256	1531	1532	1533	1534	1535	1536
257	257	1537	1538	1539	1540	1541	1542
258	258	1543	1544	1545	1546	1547	1548
259	259	1549	1550	1551	1552	1553	1554

260	260	1555	1556	1557	1558	1559	1560
261	261	1561	1562	1563	1564	1565	1566
262	262	1567	1568	1569	1570	1571	1572
263	263	1573	1574	1575	1576	1577	1578
264	264	1579	1580	1581	1582	1583	1584
265	265	1585	1586	1587	1588	1589	1590
266	266	1591	1592	1593	1594	1595	1596
267	267	1597	1598	1599	1600	1601	1602
268	268	1603	1604	1605	1606	1607	1608
269	269	1609	1610	1611	1612	1613	1614
270	270	1615	1616	1617	1618	1619	1620
271	271	1621	1622	1623	1624	1625	1626
272	272	1627	1628	1629	1630	1631	1632
273	273	1633	1634	1635	1636	1637	1638
274	274	1639	1640	1641	1642	1643	1644
275	275	1645	1646	1647	1648	1649	1650
276	276	1651	1652	1653	1654	1655	1656
277	277	1657	1658	1659	1660	1661	1662
278	278	1663	1664	1665	1666	1667	1668
279	279	1669	1670	1671	1672	1673	1674
280	280	1675	1676	1677	1678	1679	1680
281	281	1681	1682	1683	1684	1685	1686
282	282	1687	1688	1689	1690	1691	1692
283	283	1693	1694	1695	1696	1697	1698
284	284	1699	1700	1701	1702	1703	1704
285	285	1705	1706	1707	1708	1709	1710
286	286	1711	1712	1713	1714	1715	1716
287	287	1717	1718	1719	1720	1721	1722
288	288	1723	1724	1725	1726	1727	1728
289	289	1729	1730	1731	1732	1733	1734
290	290	1735	1736	1737	1738	1739	1740
291	291	1741	1742	1743	1744	1745	1746
292	292	1747	1748	1749	1750	1751	1752
293	293	1753	1754	1755	1756	1757	1758
294	294	1759	1760	1761	1762	1763	1764
295	295	1765	1766	1767	1768	1769	1770
296	296	1771	1772	1773	1774	1775	1776
297	297	1777	1778	1779	1780	1781	1782
298	298	1783	1784	1785	1786	1787	1788
299	299	1789	1790	1791	1792	1793	1794
300	300	1795	1796	1797	1798	1799	1800
301	301	1801	1802	1803	1804	1805	1806
302	302	1807	1808	1809	1810	1811	1812
303	303	1813	1814	1815	1816	1817	1818
304	304	1819	1820	1821	1822	1823	1824
305	305	1825	1826	1827	1828	1829	1830
306	306	1831	1832	1833	1834	1835	1836
307	307	1837	1838	1839	1840	1841	1842
308	308	1843	1844	1845	1846	1847	1848
309	309	1849	1850	1851	1852	1853	1854
310	310	1855	1856	1857	1858	1859	1860
311	311	1861	1862	1863	1864	1865	1866
312	312	1867	1868	1869	1870	1871	1872
313	313	1873	1874	1875	1876	1877	1878
314	314	1879	1880	1881	1882	1883	1884
315	315	1885	1886	1887	1888	1889	1890
316	316	1891	1892	1893	1894	1895	1896
317	317	1897	1898	1899	1900	1901	1902
318	318	1903	1904	1905	1906	1907	1908
319	319	1909	1910	1911	1912	1913	1914
320	320	1915	1916	1917	1918	1919	1920
321	321	1921	1922	1923	1924	1925	1926
322	322	1927	1928	1929	1930	1931	1932
323	323	1933	1934	1935	1936	1937	1938
324	324	1939	1940	1941	1942	1943	1944
325	325	1945	1946	1947	1948	1949	1950
326	326	1951	1952	1953	1954	1955	1956
327	327	1957	1958	1959	1960	1961	1962

328	328	1963	1964	1965	1966	1967	1968
329	329	1969	1970	1971	1972	1973	1974
330	330	1975	1976	1977	1978	1979	1980
331	331	1981	1982	1983	1984	1985	1986
332	332	1987	1988	1989	1990	1991	1992
333	333	1993	1994	1995	1996	1997	1998
334	334	1999	2000	2001	2002	2003	2004
335	335	2005	2006	2007	2008	2009	2010
336	336	2011	2012	2013	2014	2015	2016
337	337	2017	2018	2019	2020	2021	2022
338	338	2023	2024	2025	2026	2027	2028
339	339	2029	2030	2031	2032	2033	2034
340	340	2035	2036	2037	2038	2039	2040
341	341	2041	2042	2043	2044	2045	2046
342	342	2047	2048	2049	2050	2051	2052
343	343	2053	2054	2055	2056	2057	2058
344	344	2059	2060	2061	2062	2063	2064
345	345	2065	2066	2067	2068	2069	2070
346	346	2071	2072	2073	2074	2075	2076
347	347	2077	2078	2079	2080	2081	2082
348	348	2083	2084	2085	2086	2087	2088
349	349	2089	2090	2091	2092	2093	2094
350	350	2095	2096	2097	2098	2099	2100
351	351	2101	2102	2103	2104	2105	2106
352	352	2107	2108	2109	2110	2111	2112
353	353	2113	2114	2115	2116	2117	2118
354	354	2119	2120	2121	2122	2123	2124
355	355	2125	2126	2127	2128	2129	2130
356	356	2131	2132	2133	2134	2135	2136
357	357	2137	2138	2139	2140	2141	2142
358	358	2143	2144	2145	2146	2147	2148
359	359	2149	2150	2151	2152	2153	2154
360	360	2155	2156	2157	2158	2159	2160
361	361	2161	2162	2163	2164	2165	2166
362	362	2167	2168	2169	2170	2171	2172
363	363	2173	2174	2175	2176	2177	2178
364	364	2179	2180	2181	2182	2183	2184
365	365	2185	2186	2187	2188	2189	2190
366	366	2191	2192	2193	2194	2195	2196
367	367	2197	2198	2199	2200	2201	2202
368	368	2203	2204	2205	2206	2207	2208
369	369	2209	2210	2211	2212	2213	2214
370	370	2215	2216	2217	2218	2219	2220
371	371	2221	2222	2223	2224	2225	2226
372	372	2227	2228	2229	2230	2231	2232
373	373	2233	2234	2235	2236	2237	2238
374	374	2239	2240	2241	2242	2243	2244
375	375	2245	2246	2247	2248	2249	2250
376	376	2251	2252	2253	2254	2255	2256
377	377	2257	2258	2259	2260	2261	2262
378	378	2263	2264	2265	2266	2267	2268
379	379	2269	2270	2271	2272	2273	2274
380	380	2275	2276	2277	2278	2279	2280
381	381	2281	2282	2283	2284	2285	2286
382	382	2287	2288	2289	2290	2291	2292
383	383	2293	2294	2295	2296	2297	2298
384	384	2299	2300	2301	2302	2303	2304
385	385	2305	2306	2307	2308	2309	2310
386	386	2311	2312	2313	2314	2315	2316
387	387	2317	2318	2319	2320	2321	2322
388	388	2323	2324	2325	2326	2327	2328
389	389	2329	2330	2331	2332	2333	2334
390	390	2335	2336	2337	2338	2339	2340
391	391	2341	2342	2343	2344	2345	2346
392	392	2347	2348	2349	2350	2351	2352
393	393	2353	2354	2355	2356	2357	2358
394	394	2359	2360	2361	2362	2363	2364
395	395	2365	2366	2367	2368	2369	2370

396	396	2371	2372	2373	2374	2375	2376
397	397	2377	2378	2379	2380	2381	2382
398	398	2383	2384	2385	2386	2387	2388
399	399	2389	2390	2391	2392	2393	2394
400	400	2395	2396	2397	2398	2399	2400
401	401	2401	2402	2403	2404	2405	2406
402	402	2407	2408	2409	2410	2411	2412
403	403	2413	2414	2415	2416	2417	2418
404	404	2419	2420	2421	2422	2423	2424
405	405	2425	2426	2427	2428	2429	2430
406	406	2431	2432	2433	2434	2435	2436
407	407	2437	2438	2439	2440	2441	2442
408	408	2443	2444	2445	2446	2447	2448
409	409	2449	2450	2451	2452	2453	2454
410	410	2455	2456	2457	2458	2459	2460
411	411	2461	2462	2463	2464	2465	2466
412	412	2467	2468	2469	2470	2471	2472
413	413	2473	2474	2475	2476	2477	2478
414	414	2479	2480	2481	2482	2483	2484
415	415	2485	2486	2487	2488	2489	2490
416	416	2491	2492	2493	2494	2495	2496
417	417	2497	2498	2499	2500	2501	2502
418	418	2503	2504	2505	2506	2507	2508
419	419	2509	2510	2511	2512	2513	2514
420	420	2515	2516	2517	2518	2519	2520
421	421	2521	2522	2523	2524	2525	2526
422	422	2527	2528	2529	2530	2531	2532
423	423	2533	2534	2535	2536	2537	2538
424	424	2539	2540	2541	2542	2543	2544
425	425	2545	2546	2547	2548	2549	2550
426	426	2551	2552	2553	2554	2555	2556
427	427	2557	2558	2559	2560	2561	2562
428	428	2563	2564	2565	2566	2567	2568
429	429	2569	2570	2571	2572	2573	2574
430	430	2575	2576	2577	2578	2579	2580
431	431	2581	2582	2583	2584	2585	2586
432	432	2587	2588	2589	2590	2591	2592
433	433	2593	2594	2595	2596	2597	2598
434	434	2599	2600	2601	2602	2603	2604
435	435	2605	2606	2607	2608	2609	2610
436	436	2611	2612	2613	2614	2615	2616
437	437	2617	2618	2619	2620	2621	2622
438	438	2623	2624	2625	2626	2627	2628
439	439	2629	2630	2631	2632	2633	2634
440	440	2635	2636	2637	2638	2639	2640
441	441	2641	2642	2643	2644	2645	2646
442	442	2647	2648	2649	2650	2651	2652
443	443	2653	2654	2655	2656	2657	2658
444	444	2659	2660	2661	2662	2663	2664
445	445	2665	2666	2667	2668	2669	2670
446	446	2671	2672	2673	2674	2675	2676
447	447	2677	2678	2679	2680	2681	2682
448	448	2683	2684	2685	2686	2687	2688
449	449	2689	2690	2691	2692	2693	2694
450	450	2695	2696	2697	2698	2699	2700
451	451	2701	2702	2703	2704	2705	2706
452	452	2707	2708	2709	2710	2711	2712
453	453	2713	2714	2715	2716	2717	2718
454	454	2719	2720	2721	2722	2723	2724
455	455	2725	2726	2727	2728	2729	2730
456	456	2731	2732	2733	2734	2735	2736
457	457	2737	2738	2739	2740	2741	2742
458	458	2743	2744	2745	2746	2747	2748
459	459	2749	2750	2751	2752	2753	2754
460	460	2755	2756	2757	2758	2759	2760
461	461	2761	2762	2763	2764	2765	2766
462	462	2767	2768	2769	2770	2771	2772
463	463	2773	2774	2775	2776	2777	2778

464	464	2779	2780	2781	2782	2783	2784
465	465	2785	2786	2787	2788	2789	2790
466	466	2791	2792	2793	2794	2795	2796
467	467	2797	2798	2799	2800	2801	2802
468	468	2803	2804	2805	2806	2807	2808
469	469	2809	2810	2811	2812	2813	2814
470	470	2815	2816	2817	2818	2819	2820
471	471	2821	2822	2823	2824	2825	2826
472	472	2827	2828	2829	2830	2831	2832
473	473	2833	2834	2835	2836	2837	2838
474	474	2839	2840	2841	2842	2843	2844
475	475	2845	2846	2847	2848	2849	2850
476	476	2851	2852	2853	2854	2855	2856
477	477	2857	2858	2859	2860	2861	2862
478	478	2863	2864	2865	2866	2867	2868
479	479	2869	2870	2871	2872	2873	2874
480	480	2875	2876	2877	2878	2879	2880
481	481	2881	2882	2883	2884	2885	2886
482	482	2887	2888	2889	2890	2891	2892
483	483	2893	2894	2895	2896	2897	2898
484	484	2899	2900	2901	2902	2903	2904
485	485	2905	2906	2907	2908	2909	2910
486	486	2911	2912	2913	2914	2915	2916
487	487	2917	2918	2919	2920	2921	2922
488	488	2923	2924	2925	2926	2927	2928
489	489	2929	2930	2931	2932	2933	2934
490	490	2935	2936	2937	2938	2939	2940
491	491	2941	2942	2943	2944	2945	2946
492	492	2947	2948	2949	2950	2951	2952
493	493	2953	2954	2955	2956	2957	2958
494	494	2959	2960	2961	2962	2963	2964
495	495	2965	2966	2967	2968	2969	2970
496	496	2971	2972	2973	2974	2975	2976
497	497	2977	2978	2979	2980	2981	2982
498	498	2983	2984	2985	2986	2987	2988
499	499	2989	2990	2991	2992	2993	2994
500	500	2995	2996	2997	2998	2999	3000
501	501	3001	3002	3003	3004	3005	3006
502	502	3007	3008	3009	3010	3011	3012
503	503	3013	3014	3015	3016	3017	3018
504	504	3019	3020	3021	3022	3023	3024
505	505	3025	3026	3027	3028	3029	3030
506	506	3031	3032	3033	3034	3035	3036
507	507	3037	3038	3039	3040	3041	3042
508	508	3043	3044	3045	3046	3047	3048
509	509	3049	3050	3051	3052	3053	3054
510	510	3055	3056	3057	3058	3059	3060
511	511	3061	3062	3063	3064	3065	3066
512	512	3067	3068	3069	3070	3071	3072
513	513	3073	3074	3075	3076	3077	3078
514	514	3079	3080	3081	3082	3083	3084
515	515	3085	3086	3087	3088	3089	3090
516	516	3091	3092	3093	3094	3095	3096
517	517	3097	3098	3099	3100	3101	3102
518	518	3103	3104	3105	3106	3107	3108
519	519	3109	3110	3111	3112	3113	3114
520	520	3115	3116	3117	3118	3119	3120
521	521	3121	3122	3123	3124	3125	3126
522	522	3127	3128	3129	3130	3131	3132
523	523	3133	3134	3135	3136	3137	3138
524	524	3139	3140	3141	3142	3143	3144
525	525	3145	3146	3147	3148	3149	3150
526	526	3151	3152	3153	3154	3155	3156
527	527	3157	3158	3159	3160	3161	3162
528	528	3163	3164	3165	3166	3167	3168
529	529	3169	3170	3171	3172	3173	3174
530	530	3175	3176	3177	3178	3179	3180
531	531	3181	3182	3183	3184	3185	3186

532	532	3187	3188	3189	3190	3191	3192
533	533	3193	3194	3195	3196	3197	3198
534	534	3199	3200	3201	3202	3203	3204
535	535	3205	3206	3207	3208	3209	3210
536	536	3211	3212	3213	3214	3215	3216
537	537	3217	3218	3219	3220	3221	3222
538	538	3223	3224	3225	3226	3227	3228
539	539	3229	3230	3231	3232	3233	3234
540	540	3235	3236	3237	3238	3239	3240
541	541	3241	3242	3243	3244	3245	3246
542	542	3247	3248	3249	3250	3251	3252
543	543	3253	3254	3255	3256	3257	3258
544	544	3259	3260	3261	3262	3263	3264
545	545	3265	3266	3267	3268	3269	3270
546	546	3271	3272	3273	3274	3275	3276
547	547	3277	3278	3279	3280	3281	3282
548	548	3283	3284	3285	3286	3287	3288
549	549	3289	3290	3291	3292	3293	3294
550	550	3295	3296	3297	3298	3299	3300
551	551	3301	3302	3303	3304	3305	3306
552	552	3307	3308	3309	3310	3311	3312
553	553	3313	3314	3315	3316	3317	3318
554	554	3319	3320	3321	3322	3323	3324
555	555	3325	3326	3327	3328	3329	3330
556	556	3331	3332	3333	3334	3335	3336
557	557	3337	3338	3339	3340	3341	3342
558	558	3343	3344	3345	3346	3347	3348
559	559	3349	3350	3351	3352	3353	3354
560	560	3355	3356	3357	3358	3359	3360
561	561	3361	3362	3363	3364	3365	3366
562	562	3367	3368	3369	3370	3371	3372
563	563	3373	3374	3375	3376	3377	3378
564	564	3379	3380	3381	3382	3383	3384
565	565	3385	3386	3387	3388	3389	3390
566	566	3391	3392	3393	3394	3395	3396
567	567	3397	3398	3399	3400	3401	3402
568	568	3403	3404	3405	3406	3407	3408
569	569	3409	3410	3411	3412	3413	3414
570	570	3415	3416	3417	3418	3419	3420
571	571	3421	3422	3423	3424	3425	3426
572	572	3427	3428	3429	3430	3431	3432
573	573	3433	3434	3435	3436	3437	3438
574	574	3439	3440	3441	3442	3443	3444
575	575	3445	3446	3447	3448	3449	3450
576	576	3451	3452	3453	3454	3455	3456
577	577	3457	3458	3459	3460	3461	3462
578	578	3463	3464	3465	3466	3467	3468
579	579	3469	3470	3471	3472	3473	3474
580	580	3475	3476	3477	3478	3479	3480
581	581	3481	3482	3483	3484	3485	3486
582	582	3487	3488	3489	3490	3491	3492
583	583	3493	3494	3495	3496	3497	3498
584	584	3499	3500	3501	3502	3503	3504
585	585	3505	3506	3507	3508	3509	3510
586	586	3511	3512	3513	3514	3515	3516
587	587	3517	3518	3519	3520	3521	3522
588	588	3523	3524	3525	3526	3527	3528
589	589	3529	3530	3531	3532	3533	3534
590	590	3535	3536	3537	3538	3539	3540
591	591	3541	3542	3543	3544	3545	3546
592	592	3547	3548	3549	3550	3551	3552
593	593	3553	3554	3555	3556	3557	3558
594	594	3559	3560	3561	3562	3563	3564
595	595	3565	3566	3567	3568	3569	3570
596	596	3571	3572	3573	3574	3575	3576
597	597	3577	3578	3579	3580	3581	3582
598	598	3583	3584	3585	3586	3587	3588
599	599	3589	3590	3591	3592	3593	3594

600	600	3595	3596	3597	3598	3599	3600
601	601	3601	3602	3603	3604	3605	3606
602	602	3607	3608	3609	3610	3611	3612
603	603	3613	3614	3615	3616	3617	3618
604	604	3619	3620	3621	3622	3623	3624
605	605	3625	3626	3627	3628	3629	3630
606	606	3631	3632	3633	3634	3635	3636
607	607	3637	3638	3639	3640	3641	3642
608	608	3643	3644	3645	3646	3647	3648
609	609	3649	3650	3651	3652	3653	3654
610	610	3655	3656	3657	3658	3659	3660
611	611	3661	3662	3663	3664	3665	3666
612	612	3667	3668	3669	3670	3671	3672
613	613	3673	3674	3675	3676	3677	3678
614	614	3679	3680	3681	3682	3683	3684
615	615	3685	3686	3687	3688	3689	3690
616	616	3691	3692	3693	3694	3695	3696
617	617	3697	3698	3699	3700	3701	3702
618	618	3703	3704	3705	3706	3707	3708
619	619	3709	3710	3711	3712	3713	3714
620	620	3715	3716	3717	3718	3719	3720
621	621	3721	3722	3723	3724	3725	3726
622	622	3727	3728	3729	3730	3731	3732
623	623	3733	3734	3735	3736	3737	3738
624	624	3739	3740	3741	3742	3743	3744
625	625	3745	3746	3747	3748	3749	3750
626	626	3751	3752	3753	3754	3755	3756
627	627	3757	3758	3759	3760	3761	3762
628	628	3763	3764	3765	3766	3767	3768
629	629	3769	3770	3771	3772	3773	3774
630	630	3775	3776	3777	3778	3779	3780
631	631	3781	3782	3783	3784	3785	3786
632	632	3787	3788	3789	3790	3791	3792
633	633	3793	3794	3795	3796	3797	3798
634	634	3799	3800	3801	3802	3803	3804
635	635	3805	3806	3807	3808	3809	3810
636	636	3811	3812	3813	3814	3815	3816
637	637	3817	3818	3819	3820	3821	3822
638	638	3823	3824	3825	3826	3827	3828
639	639	3829	3830	3831	3832	3833	3834
640	640	3835	3836	3837	3838	3839	3840
641	641	3841	3842	3843	3844	3845	3846
642	642	3847	3848	3849	3850	3851	3852
643	643	3853	3854	3855	3856	3857	3858
644	644	3859	3860	3861	3862	3863	3864
645	645	3865	3866	3867	3868	3869	3870
646	646	3871	3872	3873	3874	3875	3876
647	647	3877	3878	3879	3880	3881	3882
648	648	3883	3884	3885	3886	3887	3888
649	649	3889	3890	3891	3892	3893	3894
650	650	3895	3896	3897	3898	3899	3900
651	651	3901	3902	3903	3904	3905	3906
652	652	3907	3908	3909	3910	3911	3912
653	653	3913	3914	3915	3916	3917	3918
654	654	3919	3920	3921	3922	3923	3924
655	655	3925	3926	3927	3928	3929	3930
656	656	3931	3932	3933	3934	3935	3936
657	657	3937	3938	3939	3940	3941	3942
658	658	3943	3944	3945	3946	3947	3948
659	659	3949	3950	3951	3952	3953	3954
660	660	3955	3956	3957	3958	3959	3960
661	661	3961	3962	3963	3964	3965	3966
662	662	3967	3968	3969	3970	3971	3972
663	663	3973	3974	3975	3976	3977	3978
664	664	3979	3980	3981	3982	3983	3984
665	665	3985	3986	3987	3988	3989	3990
666	666	3991	3992	3993	3994	3995	3996
667	667	3997	3998	3999	4000	4001	4002

668	668	4003	4004	4005	4006	4007	4008
669	669	4009	4010	4011	4012	4013	4014
670	670	4015	4016	4017	4018	4019	4020
671	671	4021	4022	4023	4024	4025	4026
672	672	4027	4028	4029	4030	4031	4032
673	673	4033	4034	4035	4036	4037	4038
674	674	4039	4040	4041	4042	4043	4044
675	675	4045	4046	4047	4048	4049	4050
676	676	4051	4052	4053	4054	4055	4056
677	677	4057	4058	4059	4060	4061	4062
678	678	4063	4064	4065	4066	4067	4068
679	679	4069	4070	4071	4072	4073	4074
680	680	4075	4076	4077	4078	4079	4080
681	681	4081	4082	4083	4084	4085	4086
682	682	4087	4088	4089	4090	4091	4092
683	683	4093	4094	4095	4096	4097	4098
684	684	4099	4100	4101	4102	4103	4104
685	685	4105	4106	4107	4108	4109	4110
686	686	4111	4112	4113	4114	4115	4116
687	687	4117	4118	4119	4120	4121	4122
688	688	4123	4124	4125	4126	4127	4128
689	689	4129	4130	4131	4132	4133	4134
690	690	4135	4136	4137	4138	4139	4140
691	691	4141	4142	4143	4144	4145	4146
692	692	4147	4148	4149	4150	4151	4152
693	693	4153	4154	4155	4156	4157	4158
694	694	4159	4160	4161	4162	4163	4164
695	695	4165	4166	4167	4168	4169	4170
696	696	4171	4172	4173	4174	4175	4176
697	697	4177	4178	4179	4180	4181	4182
698	698	4183	4184	4185	4186	4187	4188
699	699	4189	4190	4191	4192	4193	4194
700	700	4195	4196	4197	4198	4199	4200
701	701	4201	4202	4203	4204	4205	4206
702	702	4207	4208	4209	4210	4211	4212
703	703	4213	4214	4215	4216	4217	4218
704	704	4219	4220	4221	4222	4223	4224
705	705	4225	4226	4227	4228	4229	4230
706	706	4231	4232	4233	4234	4235	4236
707	707	4237	4238	4239	4240	4241	4242
708	708	4243	4244	4245	4246	4247	4248
709	709	4249	4250	4251	4252	4253	4254
710	710	4255	4256	4257	4258	4259	4260
711	711	4261	4262	4263	4264	4265	4266
712	712	4267	4268	4269	4270	4271	4272
713	713	4273	4274	4275	4276	4277	4278
714	714	4279	4280	4281	4282	4283	4284
715	715	4285	4286	4287	4288	4289	4290
716	716	4291	4292	4293	4294	4295	4296

RIGID TYPE SPRING STIFFNESS DIMENSION UNIT : KN , M
TRANSLATIONAL STIFFNESS : 1.7504657E+12
ROTATIONAL STIFFNESS : 1.7504657E+12

EQUATION STATUS

TOTAL NUMBER OF VALID DOFS IN MODEL .....: 4296
NUMBER OF EQUATIONS IN A BLOCK .....: 4296
NUMBER OF BLOCKS .....: 1
NUMBER OF INTERNAL LOADCASES .....: 5

==========

S E T U P E Q U A T I O N P R O F I L E
==========

THE TOTAL WEIGHT OF MODEL

TOTAL WEIGHT .....: 1.80462E+03 KN

THE CENTER OF GRAVITY OF FINITE ELEMENT MODEL

X-COORDINATE OF C.G ....: 5.80000E+00 M
Y-COORDINATE OF C.G ....: 6.85000E+00 M
Z-COORDINATE OF C.G ....: 3.35998E-01 M

STATIC ANALYSIS TIME LOG (IN SECOND)

MULTI-FRONTAL SOLUTION .....: 0.25
DISPLACEMENT OUTPUT .....: 0.08
STRESS OUTPUT .....: 0.81
TOTAL SOLUTION TIME (SUM OF THE ABOVE) .....: 1.15

♀** MIDAS/Gen WINDOWS VERSION 8.7.5 DATE FEB/17/2020 TIME 16: 2: 3
** Modeling, Integrated Design & Analysis Software PC WINDOWS XP/VISTA/7/8/8.1 VERSION

==========

E I G E N V A L U E A N A L Y S I S
==========

STRUM SEQUENCE DATA

SHIFT NO.	SHIFT FREQUENCY [RAD/SEC]	[CYCLES/SEC]	EIGENVALUE BELOW
1	0.00000E+00	0.00000E+00	0
2	8.23188E+01	1.31014E+01	10

ALL FREQUENCIES HAVE BEEN CHECKED .....: YES

MODE NO.	F R E Q U E N C Y [RAD/SEC]	[CYCLES/SEC]	PERIOD [SEC]	TOLERANCE
1	2.185957E+01	3.479059E+00	2.87434E-01	1.12576E-26
2	2.608028E+01	4.150805E+00	2.40917E-01	1.12576E-26
3	3.350205E+01	5.332016E+00	1.87546E-01	1.12576E-26
4	3.552408E+01	5.653833E+00	1.76871E-01	1.12576E-26
5	3.834208E+01	6.102331E+00	1.63872E-01	1.12576E-26
6	5.010964E+01	7.975196E+00	1.25389E-01	1.38607E-25
7	5.223891E+01	8.314081E+00	1.20278E-01	4.04239E-25
8	5.319102E+01	8.465614E+00	1.18125E-01	8.00773E-26
9	5.892619E+01	9.378395E+00	1.06628E-01	6.44994E-23
10	7.411523E+01	1.179580E+01	8.47759E-02	1.47888E-18

MAJOR MODE OF DIRECTIONAL MODAL PARTICIPATION MASS

DIRECTION	MAJOR MODE	M.P.M
DIR-DX	3	6.565
DIR-DY	8	7.813
DIR-DZ	-	0.000
DIR-RX	2	73.896
DIR-RY	1	57.033
DIR-RZ	6	10.095

MODAL PARTICIPATION MASSES(PERCENT)

MODE	TRAN-X		TRAN-Y		TRAN-Z		ROTN-X		ROTN-Y		ROTN-Z	
NUMBER	MASS	SUM	MASS	SUM	MASS	SUM	MASS	SUM	MASS	SUM	MASS	SUM
1	5.488	5.488	0.000	0.000	0.000	0.000	0.000	0.000	57.033	57.033	0.002	0.002
2	0.000	5.488	7.725	7.725	0.000	0.000	73.896	73.896	0.000	57.033	0.000	0.002
3	6.565	12.053	0.000	7.725	0.000	0.000	0.000	73.896	27.480	84.513	0.002	0.004
4	0.000	12.053	0.000	7.725	0.000	0.000	0.000	73.896	0.000	84.513	6.054	6.058
5	0.000	12.053	0.000	7.725	0.000	0.000	0.000	73.896	0.000	84.513	0.000	6.058
6	0.001	12.054	0.000	7.725	0.000	0.000	0.000	73.896	0.000	84.513	10.095	16.153
7	0.832	12.885	0.000	7.725	0.000	0.000	0.000	73.896	4.492	89.004	0.000	16.154
8	0.000	12.885	7.813	15.538	0.000	0.000	14.736	88.632	0.000	89.004	0.000	16.154
9	0.000	12.885	0.000	15.538	0.000	0.000	0.000	88.632	0.000	89.004	0.081	16.235
10	0.000	12.885	0.313	15.851	0.000	0.000	0.008	88.640	0.000	89.004	0.000	16.235

MODAL EQRTHQUAKE EXCITATION FACTOR KN M

MODE	TRAN-X	TRAN-Y	TRAN-Z	ROTN-X	ROTN-Y	ROTN-Z
1	0.45447E+01	0.10414E-05	0.00000E+00	0.00000E+00	0.00000E+00	0.00000E+00
2	-0.16083E-04	0.53919E+01	0.00000E+00	0.00000E+00	0.00000E+00	0.00000E+00
3	0.49706E+01	0.92757E-06	0.00000E+00	0.00000E+00	0.00000E+00	0.00000E+00
4	-0.16385E-01	-0.75481E-03	0.00000E+00	0.00000E+00	0.00000E+00	0.00000E+00
5	-0.11063E-03	-0.24569E-03	0.00000E+00	0.00000E+00	0.00000E+00	0.00000E+00
6	0.50822E-01	0.27420E-02	0.00000E+00	0.00000E+00	0.00000E+00	0.00000E+00
7	-0.17691E+01	-0.28391E-04	0.00000E+00	0.00000E+00	0.00000E+00	0.00000E+00

8	0.18401E-03	0.54226E+01	0.00000E+00	0.00000E+00	0.00000E+00
9	-0.63099E-02	-0.34652E-03	0.00000E+00	0.00000E+00	0.00000E+00
10	-0.82595E-04	0.10851E+01	0.00000E+00	0.00000E+00	0.00000E+00

EFFECTIVE MODAL MASS & RATIO N M

MODE	TRAN-X		TRAN-Y		TRAN-Z	
	ROTN-X		ROTN-Y		ROTN-Z	
NUMBER	MASS	SUM	MASS	SUM	MASS	SUM
MASS	SUM	MASS	SUM	MASS	SUM	
1	0.20654E+05	0.20654E+05	0.10846E-08	0.10846E-08	0.00000E+00	0.00000E+00
0.40937E-09	0.40937E-09	0.26889E+06	0.26889E+06	0.21536E+03	0.21536E+03	
2	0.25867E-06	0.20654E+05	0.29072E+05	0.29072E+05	0.00000E+00	0.00000E+00
0.34839E+06	0.34839E+06	0.28955E-07	0.26889E+06	0.59023E+00	0.21595E+03	
3	0.24707E+05	0.45362E+05	0.86038E-09	0.29072E+05	0.00000E+00	0.00000E+00
0.64929E-08	0.34839E+06	0.12956E+06	0.39845E+06	0.20453E+03	0.42048E+03	
4	0.26847E+00	0.45362E+05	0.56973E-03	0.29072E+05	0.00000E+00	0.00000E+00
0.73237E-04	0.34839E+06	0.80476E-01	0.39845E+06	0.61101E+06	0.61143E+06	
5	0.12239E-04	0.45362E+05	0.60365E-04	0.29072E+05	0.00000E+00	0.00000E+00
0.69673E-05	0.34839E+06	0.23111E-05	0.39845E+06	0.13992E-03	0.61143E+06	
6	0.25829E+01	0.45364E+05	0.75186E-02	0.29072E+05	0.00000E+00	0.00000E+00
0.13333E-03	0.34839E+06	0.26314E+00	0.39845E+06	0.10188E+07	0.16302E+07	
7	0.31297E+04	0.48494E+05	0.80603E-06	0.29072E+05	0.00000E+00	0.00000E+00
0.20429E-05	0.34839E+06	0.21177E+05	0.41962E+06	0.16675E+02	0.16302E+07	
8	0.33861E-04	0.48494E+05	0.29405E+05	0.58477E+05	0.00000E+00	0.00000E+00
0.69476E+05	0.41787E+06	0.10064E-04	0.41962E+06	0.30620E+00	0.16302E+07	
9	0.39815E-01	0.48494E+05	0.12008E-03	0.58477E+05	0.00000E+00	0.00000E+00
0.38465E-04	0.41787E+06	0.65710E-02	0.41962E+06	0.81653E+04	0.16384E+07	
10	0.68220E-05	0.48494E+05	0.11774E+04	0.59655E+05	0.00000E+00	0.00000E+00
0.35648E+02	0.41790E+06	0.10017E-05	0.41962E+06	0.53962E-02	0.16384E+07	

MODAL DIRECTION FACTOR

MODE	TRAN-X	TRAN-Y	TRAN-Z	ROTN-X	ROTN-Y	ROTN-Z
1	8.7777	0.0000	0.0000	0.0000	91.2189	0.0034
2	0.0000	9.4642	0.0000	90.5358	0.0000	0.0000
3	19.2818	0.0000	0.0000	0.0000	80.7123	0.0060
4	0.0012	0.0000	0.0000	0.0000	0.0003	

99.9985					
5	14.3600	70.8273	0.0000	6.5258	2.1646
6.1223					
6	0.0068	0.0000	0.0000	0.0000	0.0006
99.9926					
7	15.6209	0.0000	0.0000	0.0000	84.3760
0.0031					
8	0.0000	34.6486	0.0000	65.3514	0.0000
0.0000					
9	0.0131	0.0000	0.0000	0.0000	0.0017
99.9852					
10	0.0000	97.6402	0.0000	2.3598	0.0000
0.0000					

EIGEN VALUE ANALYSIS TIME LOG (IN SECOND)

EIGENSOLUTION .....: 0.69
PRINTING .....: 0.91
TOTAL SOLUTION TIME (SUM OF THE ABOVE) .....: 1.60

♀** MIDAS/Gen WINDOWS VERSION 8.7.5 DATE
FEB/17/2020 TIME 16: 2: 4
** Modeling, Integrated Design & Analysis Software PC WINDOWS
XP/VISTA/7/8/8.1 VERSION
==========
==========

R E S P O N S E S P E C T R U M A N A L Y S I S
==========

M O D A L P A R T I C I P A T I O N F A C T O R

MODE NO.	X-DIRECTION	Y-DIRECTION	Z-DIRECTION
1	143.7166	0.0000	0.0000
2	-0.0005	170.5064	0.0000
3	157.1850	0.0000	0.0000
4	-0.5181	-0.0239	0.0000
5	-0.0035	-0.0078	0.0000
6	1.6071	0.0867	0.0000
7	-55.9433	-0.0009	0.0000
8	0.0058	171.4778	0.0000
9	-0.1995	-0.0110	0.0000
10	-0.0026	34.3140	0.0000

M O D A L S P E C T R A L V A L U E

S P E C T R U M N O. : 1

MODE NO.	PERIOD(SEC)	ACCELERATION	VELOCITY	DISPLACEMENT
1	0.287434	3.4321	0.1570	0.0072
2	0.240917	3.4321	0.1316	0.0050
3	0.187546	3.4321	0.1024	0.0031
4	0.176871	3.4321	0.0966	0.0027
5	0.163872	3.4321	0.0895	0.0023
6	0.125389	3.3750	0.0674	0.0013
7	0.120278	3.3639	0.0644	0.0012
8	0.118125	3.3591	0.0632	0.0012

9	0.106628	3.3320	0.0565	0.0010
10	0.084776	3.2721	0.0441	0.0006

MAXIMUM DISPLACEMENT OF MODAL COORDINATE

S P E C T R U M N O. : 1

MODE NO.	X-DIRECTION	Y-DIRECTION	Z-DIRECTION
1	1.0322	0.0000	0.0000
2	0.0000	0.0000	0.0000
3	0.4806	0.0000	0.0000
4	-0.0014	0.0000	0.0000
5	0.0000	0.0000	0.0000
6	0.0022	0.0000	0.0000
7	-0.0690	0.0000	0.0000
8	0.0000	0.0000	0.0000
9	-0.0002	0.0000	0.0000
10	0.0000	0.0000	0.0000

M O D A L S P E C T R A L V A L U E

S P E C T R U M N O. : 2

MODE NO.	PERIOD(SEC)	ACCELERATION	VELOCITY	DISPLACEMENT
1	0.287434	3.4321	0.1570	0.0072
2	0.240917	3.4321	0.1316	0.0050
3	0.187546	3.4321	0.1024	0.0031
4	0.176871	3.4321	0.0966	0.0027
5	0.163872	3.4321	0.0895	0.0023
6	0.125389	3.3750	0.0674	0.0013
7	0.120278	3.3639	0.0644	0.0012
8	0.118125	3.3591	0.0632	0.0012
9	0.106628	3.3320	0.0565	0.0010
10	0.084776	3.2721	0.0441	0.0006

MAXIMUM DISPLACEMENT OF MODAL COORDINATE

S P E C T R U M N O. : 2

MODE NO.	X-DIRECTION	Y-DIRECTION	Z-DIRECTION
1	0.0000	0.0000	0.0000
2	0.0000	0.8604	0.0000
3	0.0000	0.0000	0.0000
4	0.0000	-0.0001	0.0000
5	0.0000	0.0000	0.0000
6	0.0000	0.0001	0.0000
7	0.0000	0.0000	0.0000
8	0.0000	0.2036	0.0000
9	0.0000	0.0000	0.0000
10	0.0000	0.0204	0.0000

RESPONSE SPECTRUM ANALYSIS TIME LOG (IN SECOND)

MAXIMUM MODAL DISPLACEMENTS .....: 0.07
DISPLACEMENT OUTPUT .....: 0.29
STRESS OUTPUT .....: 1.45
TOTAL SOLUTION TIME (SUM OF THE ABOVE) .....: 1.81

```
 RESPONSE SPECTRUM ANALYSIS TIME LOG ( IN SECOND )
 -------------------------------------------------
 MAXIMUM MODAL DISPLACEMENTS ................:     0.00
 DISPLACEMENT OUTPUT ........................:     0.00
 STRESS OUTPUT ..............................:

♀**  MIDAS/Gen WINDOWS VERSION 8.7.5                                    DATE
FEB/17/2020  TIME 16: 2: 7
**  Modeling, Integrated Design & Analysis Software              PC WINDOWS
XP/VISTA/7/8/8.1 VERSION
==========================================================================================
===============



 ============================================================
 ** O V E R A L L   T I M E   L O G   I N   S E C O N D **
 ============================================================

  - INPUT DATA READING AND GENERATION ..........:     0.02
  - FORM ELEMENT STIFFNESS MATRICES ............:     0.21
  - FORM GLOBAL LOAD VECTOR ....................:     0.01
  - FORM TOTAL STIFFNESS MATRICES ..............:     0.06
  - P-DELTA ANALYSIS ...........................:     0.00
  - STATIC ANALYSIS ............................:     1.15
  - MOVING LOAD ANALYSIS .......................:     0.00
  - SETTLEMENT ANALYSIS ........................:     0.00
  - EIGENVALUE EXTRACTION ......................:     1.60
  - RESPONSE SPECTRUM ANALYSIS .................:     1.82
  - TIME HISTORY ANALYSIS ......................:     0.00
  - PRINT DYNAMIC INFORMATION OUTPUT ...........:     0.47
  - TOTAL ELAPSED TIME .........................:     5.34
```